MUNICIPALITY OF ANCHORAGE
STANDARD SPECIFICATIONS

DIVISION 70
MISCELLANEOUS

STANDARD CONSTRUCTION SPECIFICATIONS
MISCELLANEOUS
DIVISION 70
INDEX

SECTION 70.01	GENERAL	1
Article 1.1	Scope of Work	1
Article 1.2	Applicable Standards	1
SECTION 70.02	ADJUST GAS VALVE KEY BOX TO FINISH GRADE	2
Article 2.1	General	2
Article 2.2	Material	2
Article 2.3	Construction	2
Article 2.4	Measurement	2
Article 2.5	Basis of Payment	2
SECTION 70.03	ADJUST GAS VALVE MANHOLE TO FINISH GRADE	3
Article 3.1	General	3
Article 3.2	Material	3
Article 3.3	Construction	3
Article 3.4	Measurement	3
Article 3.5	Basis of Payment	3
SECTION 70.04	ADJUST ELECTRIC/TELEPHONE MANHOLE	4
Article 4.1	General	4
Article 4.2	Materials	4
Article 4.3	Construction	4
Article 4.4	Measurement	4
Article 4.5	Basis of Payment	4
SECTION 70.05	ADJUST ELECTRICAL VAULT	5
Article 5.1	General	5
Article 5.2	Materials	5
Article 5.3	Construction	5
Article 5.4	Measurement	6
Article 5.5	Basis of Payment	6
SECTION 70.06	ADJUST UTILIDUCT LID	7
Article 6.1	General	7
Article 6.2	Materials	7
Article 6.3	Construction	7
Article 6.4	Measurement	8
Article 6.5	Basis of Payment	8

SECTION 70.07 REMOVE PIPE 9
Article 7.1 General 9
Article 7.2 Construction 9
Article 7.3 Measurement 9
Article 7.4 Basis of Payment 9

SECTION 70.08 RESET FENCE 10
Article 8.1 General 10
Article 8.2 Material 10
Article 8.3 Construction 10
Article 8.4 Measurement 10
Article 8.5 Basis of Payment 10

SECTION 70.09 RESET PARKING METERS 11
Article 9.1 General 11
Article 9.2 Construction 11
Article 9.3 Measurement 11
Article 9.4 Basis of Payment 11

SECTION 70.10 TRAFFIC MARKINGS 12
Article 10.1 General 12
Article 10.2 Materials 12
Article 10.3 Construction 13
Article 10.4 Measurement 16
Article 10.5 Basis of Payment 16

SECTION 70.11 STANDARD SIGNS 17
Article 11.1 General 17
Article 11.2 Materials 17
Article 11.3 Construction 20
Article 11.4 Measurement 21
Article 11.5 Basis of Payment 21

SECTION 70.12 TRAFFIC MAINTENANCE 22
Article 12.1 General 22
Article 12.2 Traffic Control Plan 22
Article 12.3 Pedestrian Traffic 23
Article 12.4 Work Site Traffic Supervisor 23
Article 12.5 Materials 24
Article 12.6 Public Notice 26
Article 12.7 Traffic Control Devices 27
Article 12.8 Authority of the Engineer 27
Article 12.9 Execution 27
Article 12.10 Measurement 28
Article 12.11 Basis of Payment 28

SECTION 70.13 BOLLARDS 29
Article 13.1 General 29
Article 13.2 Materials 29
Article 13.3 Construction 31
Article 13.4 Method of Measurement 31
Article 13.5 Basis of Payment 32

SECTION 70.14 REMOVE GUARDRAIL 33
Article 14.1 General 33
Article 14.2 Construction 33
Article 14.3 Measurement 33
Article 14.4 Basis of Payment 33

SECTION 70.15 GUARDRAIL 34
Article 15.1 General 34
Article 15.2 Material 34
Article 15.3 Construction 34
Article 15.4 Measurement 34
Article 15.5 Basis of Payment 34

SECTION 70.16 TEMPORARY GROUP MAILBOXES 35
Article 16.1 General 35
Article 16.2 Materials 35
Article 16.3 Construction 35
Article 16.4 Measurement 35
Article 16.5 Basis of Payment 35

SECTION 70.17 RELOCATE MAILBOX 36
Article 17.1 General 36
Article 17.2 Materials 36
Article 17.3 Construction 36
Article 17.4 Measurement 36
Article 17.5 Basis of Payment 36

SECTION 70.18 CHAIN LINK FENCE 37
Article 18.1 General 37
Article 18.2 Materials 37
Article 18.3 Tables 39
Article 18.4 Construction 40
Article 18.5 Measurement 42
Article 18.6 Basis of Payment 42

SECTION 70.19 SILT FENCE 43
Article 19.1 General 43
Article 19.2 Materials 43
Article 19.3 Construction 43
Article 19.4 Measurement 43
Article 19.5 Basis of Payment 43

SECTION 70.20 SOIL STABILIZATION 44
Article 20.1 General 44
Article 20.2 Material 44
Article 20.3 Construction 46
Article 20.4 Surface Requirements 46
Article 20.5 Application 46
Article 20.6 Maintenance and Repair 48
Article 20.7 Measurement 48
Article 20.8 Basis of Payment 49

SECTION 70.21 FLEXIBLE DELINEATORS 50
Article 21.1 General 50
Article 21.2 Submittals 50
Article 21.3 Materials 50
Article 21.4 Construction 50
Article 21.5 Measurement 50
Article 21.6 Basis of Payment 50

STANDARD CONSTRUCTION SPECIFICATIONS
MISCELLANEOUS
DIVISION 70

SECTION 70.01 GENERAL

Article 1.1 Scope of Work

The Work covered by these Specifications consists of providing all plant, labor, equipment, supplies, materials, transportation, handling and storage, and performing all operations in connection with the adjustment and/or construction of miscellaneous facilities as provided in this Division.

Article 1.2 Applicable Standards

The latest revision of the following standards of the American Society for Testing and Materials (ASTM) and the American Association of State Highway and Transportation Officials (AASHTO) are hereby made a part of these Specifications.

ASTM A-112	Specification for Zinc-Coated (Galv.) Steel Tie Wires
ASTM A-120	Specification for Black and Hot-Dipped Zinc-Coated (Galv.) Welded and Seamless Steel Type for Ordinary Uses
ASTM A-121	Specification for Zinc-Coated (Galv.) Steel Barbed Wire
ASTM A-153	Specification for Zinc-Coated (Hot Dip) on Iron and Steel Hardware
ASTM A-227	Specification for Hard-Drawn Steel Spring Wire
ASTM A-307	Specification for Low-Carbon Steel Externally and Internally Threaded Standard Fasteners
ASTM A-392	Specification for Zinc-Coated Steel Chain Link Fence Fabric
AASHTO M-133	Specification for Preservatives and Pressure Treatment Processes for Timber
AASHTO M-145	Classification of Soils
AASHTO M-180	Specification for Corrugated Sheet Steel Beams for Highway Guardrail

SECTION 70.02 ADJUST GAS VALVE KEY BOX TO FINISH GRADE

Article 2.1 General

The Work under this Section consists of providing all operations pertaining to adjustment of existing gas valve key boxes to finish grade. The Contractor must contact ENSTAR's Distribution Department prior to starting any Work that includes or is adjacent to the gas valve key box.

Article 2.2 Material

ENSTAR will furnish all materials to adjust gas valve key boxes to finish grade.

Article 2.3 Construction

The Contractor shall adjust gas valve key boxes in accordance with the applicable Standard Details, unless otherwise directed by the Engineer. Any damage to gas valve key boxes resulting from construction under this Contract shall be repaired or the damaged portion replaced at the Contractor's expense. All gas valve key box adjustments will be accomplished as requested by the Engineer. The Contractor shall be responsible for ensuring that the gas valve key box is vertical, clean, to proper grade, and readily accessible for operation of the valve.

Contractor shall adjust the service key box to finish grade prior to placement of asphalt pavement. After-the-fact cutting of new asphalt for adjustments is not accepted. Any adjustment(s) requiring cutting of new asphalt shall not be paid and shall be deducted from the plan quantity.

Article 2.4 Measurement

Adjustment of gas valve key boxes will be measured per unit, complete in place.

Article 2.5 Basis of Payment

Payment for this Work shall be in accordance with Division 10, Section 10.07 - Measurement and Payment, and shall include full payment for all Work described in this Section.

Payment shall be made under the following unit:

ITEM	UNIT
Adjust Gas Valve Key Box to Finish Grade	Each

SECTION 70.03 ADJUST GAS VALVE MANHOLE TO FINISH GRADE

Article 3.1 General

The Work under this Section consists of providing all operations pertaining to adjustment of existing gas valve manholes to finish grade. The Contractor must contact ENSTAR's Distribution Department prior to starting any Work that includes or is adjacent to the gas valve manhole.

Article 3.2 Material

ENSTAR will furnish all materials, except mortar, to adjust gas valve manholes to finish grade.

Article 3.3 Construction

The Contractor shall adjust gas valve manholes in accordance with applicable Standard Detail, unless otherwise directed by the Engineer. Any damage to gas valve manholes resulting from construction under this Contract shall be repaired or the damaged portion replaced at the Contractor's expense. The Contractor shall be responsible for ensuring that the valve box is vertical, clean, to proper grade, and readily accessible for operation of the valve.

Contractor shall adjust the gas valve manhole to finish grade prior to placement of asphalt pavement. After-the-fact cutting of new asphalt for adjustments is not accepted. Any adjustment(s) requiring cutting of new asphalt shall not be paid and shall be deducted from the plan quantity.

Article 3.4 Measurement

Adjustment of gas valve manholes will be measured per unit, complete in place.

Article 3.5 Basis of Payment

Payment for this Work shall be in accordance with Division 10, Section 10.07 - Measurement and Payment, and shall include full payment for all Work described in this Section.

Payment shall be made under the following unit:

ITEM	UNIT
Adjust Gas Valve Manhole to Finish Grade	Each

SECTION 70.04 ADJUST ELECTRIC/TELEPHONE MANHOLE

Article 4.1 General

The Work under this Section consists of providing all operations and materials required for the preparation and adjustment of electric/telephone manhole lids, frames, and rings to finish grade.

Article 4.2 Materials

All concrete and cement used in the adjustment of electrical/telephone manholes shall conform to the requirements for manholes as specified in Division 55, Section 55.05 - Manholes and Catch Basin Manholes.

The Contractor may utilize Neenah Manhole Adjusting Rings P1979-077, Part No: 19790053, Catalog 1797-01, or an approved equal, for adjusting the electrical and telephone manhole to finish grade.

Article 4.3 Construction

All manholes to be adjusted shall be inspected by the Contractor, the Engineer, and the applicable utility's representative to verify size, condition, and any necessary replacement of the existing lids. Inspection, replacement, and cost of lids will be considered incidental to the Contract and no separate payment shall be made. Manholes may be adjusted by installing grade rings and/or grouting. Manhole adjustment by grouting shall consist of bringing the manhole grade ring and lid to final grade, then grouting underneath the ring. The Contractor shall have an assortment of adjustment rings of various thicknesses on the project site to preclude after-the-fact asphalt cutting for adjustment.

After-the-fact cutting of new asphalt for adjustments will not be accepted; rings will be inventoried before authorization to pave is given. Any utility adjustments requiring cutting of new asphalt will not be paid and will be deducted from the plan quantity.

The Contractor shall contact the appropriate utility at least forty-eight (48) hours prior to beginning the overlay operation, and to schedule a representative of that utility to be on site to supervise the manhole adjustments to finish grade.

Prior to placement of any grade ring adjustment, the existing seat should be cleaned and all loose material shall be blown out or wire brushed to ensure a proper fit.

Article 4.4 Measurement

Adjustments of electric/telephone manholes to finish grade shall be measured per unit, complete in place, and adjusted to the required grade.

Article 4.5 Basis of Payment

Payment for this Work shall be in accordance with Division 10, Section 10.07 - Measurement and Payment, and shall include full payment for all Work described in this Section.

Payment shall be made under the following units:

ITEM	UNIT
Adjust Electric Manhole (Type)	Each
Adjust Telephone Manhole (Type)	Each

SECTION 70.05 ADJUST ELECTRICAL VAULT

Article 5.1 General

The Work under this Section consists of performing all operations pertaining to materials, equipment, and personnel required for the preparation and adjustment of a high voltage electrical vault to finish grade. The high voltage electrical vault is typically located within a sidewalk adjacent to a building or in an alleyway and is specifically located on the Drawings.

Article 5.2 Materials

All Portland Cement Concrete utilized in the adjustment of the electrical vault shall conform to the requirements as specified in Division 55, Section 55.05 - Manholes and Catch Basin Manholes. The joint sealing compound utilized to seal the joint between the electrical vault's lid and walls shall be premolded plastic gasket or an approved equal.

Article 5.3 Construction

No later than forty-eight (48) hours prior to commencement of Work on adjustment of the electrical vault, Contractor shall contact the Utility Line Superintendent of ML&P. This vault contains energized high-voltage circuits and all Work in and immediately surrounding the vault shall be monitored and supervised by a Journeyman Power Lineman with a current State of Alaska Certificate of Fitness. The Contractor shall be responsible for protecting the Contractor's personnel and the general public from the open vault as well as from the hazardous high voltages present within the vault.

The electrical vault lid to be adjusted typically contains two manhole frames and covers and forms an integral part of the sidewalk, alleyway, or other finished surface. The vault lid shall match the final finish grade of the finished surface in which it is installed. Any proposed adjacent curb shall be in accordance with Standard Detail 30-1 as identified on the Drawings. To lower the vault lid, the Contractor shall remove a portion of the lid in order that the top of the vault lid match the proposed top back of curb elevation with a two percent (2%) transverse slope. The existing area of contact between the vault lid and vault walls is typically a rabbet joint and not a flat surface.

Prior to removal of the electrical vault lid, Contractor, Engineer, and an ML&P representative shall inspect and verify the condition of the vault lid and vault structure. After verification of condition, Contractor shall submit a drawing detailing how the vault lid will be lowered. The drawing shall be approved in writing by ML&P. The vault lid shall be adjusted by cutting and removing a portion of the vault lid. The vault lid shall be cut to match the existing vault wall rabbet joint. The rabbet joint shall be sealed to provide a watertight seal.

Prior to replacement of the vault lid, the vault lid and vault structure shall be inspected by Contractor, Engineer, and an ML&P representative to verify adjustments. Any Work, personnel, and/or materials required to properly correct problems shall be at Contractor's expense. After ML&P's written receipt of approval, Contractor shall reset the vault lid at the correct adjusted elevation and grade.

Contractor may propose an alternate adjustment method. This alternate method must be submitted to an ML&P representative in writing. ML&P shall have sole discretion on

the approval of the Contractor's proposed alternate method. If an alternate method is approved, no added or separate payment shall be made.

Article 5.4 Measurement

The method of measurement for all Work in this Section shall be a lump sum. The lump sum cost for adjusting the electrical vault to finish grade shall include all labor, materials, and equipment. The bid item shall include all required usable and unusable excavation, classified fill and backfill material, compaction, concrete cutting and removal, vault lid removal and replacement, traffic control, and required personnel.

Article 5.5 Basis of Payment

Payment for this Work shall be in accordance with Division 10, Section 10.07 - Measurement and Payment, and shall include full payment for all Work described in this Section.

Payment shall be made under the following unit:

ITEM	UNIT
Adjust Electrical Vault	Each

SECTION 70.06 ADJUST UTILIDUCT LID

Article 6.1 General

The Work under this Section consists of all operations pertaining to the adjustment, either up or down, of an existing ACS/ML&P concrete utiliduct lid as directed by the Engineer.

Article 6.2 Materials

All Portland Concrete Cement utilized in the adjustment of the utiliduct lid shall conform to the requirements as specified in Division 55, Section 55.05 - Manholes and Catch Basin Manholes.

Article 6.3 Construction

The utiliduct to be adjusted typically consists of a dual channel concrete structure with a structural concrete top/lid. Each utiliduct lid section is typically approximately five feet (5') in width and eight feet (8') in length. Prior to adjustment of the utiliduct lid, Contractor, Engineer, and a representative from both ACS and ML&P shall inspect and verify the condition of the utiliduct lid and utiliduct structure. After verification of condition, Contractor shall utilize the method of adjustment in accordance to the Utiliduct Lid Adjustment Detail available from ML&P. The utiliduct lid shall match the finished surface in which it is installed.

Contractor may submit an alternative method adjustment to the Engineer detailing how the utiliduct lid will be adjusted. The alternative method of adjustment shall not reduce the existing load rating of the utiliduct and utiliduct lid. The alternative method of adjustment of the utiliduct lid shall be designed, stamped, and signed by a registered professional engineer licensed by the State of Alaska. Contractor shall submit an ACS and ML&P approved substitution request in accordance with Division 10, Section 10.05, Article 5.7 - Materials. All costs associated with preparing the design of an alternative utiliduct lid adjustment and obtaining the necessary utility approvals prior to submitting the substitution request shall be considered incidental to this item and no additional payment will be made.

No later than forty-eight (48) hours prior to commencement of Work on adjustment of the utiliduct, Contractor shall contact both the Outside Plant Construction Supervisor of ACS and the ML&P Line Superintendent. The utiliduct contains telephone and energized high-voltage circuits. All Work in and immediately surrounding the utiliduct shall be monitored and supervised by a Journeyman Power Lineman with a current State of Alaska Certificate of Fitness. The Contractor shall be responsible for protecting Contractor's personnel and the general public from the open utiliduct, as well as the hazardous high-voltages and telephone lines present within the utiliduct. Should ACS's and/or ML&P's cables be damaged, ACS and/or ML&P will install new cables at Contractor's expense.

Contractor shall adjust the utiliduct lid to finish grade prior to placement of asphalt pavement. After-the-fact cutting of new asphalt for adjustment(s) will not be accepted. Any adjustment requiring cutting of new asphalt will not be paid and will be deducted from the plan quantity.

Article 6.4 Measurement

The method of measurement for all Work in this Section shall be measured in linear feet along the top face at the centerline of the utiliduct, complete in place, and adjusted to finish grade. The bid item shall include all required material, usable and unusable excavation, classified fill and backfill, compaction, Portland Concrete Cement, traffic control, required personnel, and equipment.

Article 6.5 Basis of Payment

Payment for this Work shall be in accordance with Division 10, Section 10.07 - Measurement and Payment, and shall include full payment for all Work described in this Section.

Payment shall be made under the following unit:

ITEM	UNIT
Adjust Utiliduct Lid	Linear Feet

SECTION 70.07 REMOVE PIPE

Article 7.1 General

The Work under this Section consists of performing all operations pertaining to the removal and disposal or salvage of existing pipes (of whatever size of pipe encountered), when encountered in the excavation and/or as directed by the Engineer.

Article 7.2 Construction

Contractor shall remove salvageable pipes and deliver the pipes to a location as directed by the Engineer. Contractor shall provide a disposal site for non-salvageable material in accordance with the provisions of Division 10, Section 10.04, Article 4.9 - Disposal Sites.

Excavation required in the removal of the pipes is incidental to this bid item. Contractor shall backfill the excavation with suitable, non-frost-susceptible materials and compact it to not less than ninety-five percent (95%) of maximum density as directed by the Engineer.

Article 7.3 Measurement

Removal of pipes is measured per linear foot without regard to pipe size. Removal of electrical conduit of whatever size and type is incidental to the Contract, unless provided for elsewhere in the Contract.

Article 7.4 Basis of Payment

Payment for this Work shall be in accordance with Division 10, Section 10.07 - Measurement and Payment, and shall include full payment for all Work described in this Section.

Payment shall be made under the following unit:

ITEM	UNIT
Remove Pipe	Linear Foot

SECTION 70.08 RESET FENCE

Article 8.1 General

The Work under this Section consists of providing all operations pertaining to removing, storing, and resetting existing fence whatever height and type of fencing material as indicated on the Drawings or as directed by the Engineer.

Article 8.2 Material

All materials which can be reused shall be salvaged from the existing fence. Those materials which cannot be salvaged or are damaged by the Contractor's operations shall be replaced, at the Contractor's expense, with new materials which as nearly as possible duplicate the kind and quality of materials in the original installation.

Nails, staples, fastening wires or devices, and all materials required for the construction of such anchors, end posts or other portions of the fence which can be replaced more efficiently than they can be moved, shall be furnished by the Contractor.

If the property owner elects to replace any of the existing fencing materials with other materials in better condition, he shall furnish and deliver such materials to the site of the Work, upon the approval of the Engineer and the Contractor.

Article 8.3 Construction

The fence shall be set in close conformity with the property line shown on the Drawings or as directed by the Engineer. Posts and anchors shall be set at the same depth and spacing as in the original fence. Wire shall be drawn taut but care shall be taken to avoid over-stressing the salvaged materials. Permanent anchors, end posts or other parts which cannot be economically moved shall be replaced by equivalent construction. If any new materials require painting, they shall be painted to match the original materials as nearly as possible. If a match cannot be attained to the satisfaction of the Engineer, the entire fence will be painted. The reset fence shall be placed in at least as good condition as the existing fence before it was moved.

Article 8.4 Measurement

Resetting fence will be measured by length in linear feet, complete and accepted in its final position.

Article 8.5 Basis of Payment

Payment for this Work shall be in accordance with Division 10, Section 10.07 - Measurement and Payment, and shall include full payment for all Work described in this Section.

Payment shall be made under the following unit:

ITEM	UNIT
Remove and Reset Fence	Linear Foot
Reset Fence	Linear Foot

SECTION 70.09 RESET PARKING METERS

Article 9.1 General

The Work under this Section consists of performing all operations pertaining to furnishing all equipment, materials, and personnel to remove and reset existing parking meter post assemblies.

Article 9.2 Construction

All posts shall be placed in excavated holes. Depth of embedment shall be as shown on Drawings, unless otherwise directed.

Surplus excavated material shall be disposed of by the Contractor and shall be incidental to this bid item.

All materials and finished parking meter installations are subject to inspection and acceptance in place by the Anchorage Parking Authority. Contact the Anchorage Parking Authority twenty-four (24) hours prior to removal.

Article 9.3 Measurement

Removal and resetting of existing parking meters shall be measured per each parking meter post assembly, reset and accepted in final position. Parking meter and post components damaged or destroyed due to the Contractor's operation shall be replaced by the Contractor at no additional expense to the Owner. One post equipped with two or more parking meters shall be considered a single parking meter assembly.

Article 9.4 Basis of Payment

Payment for this Work shall be in accordance with Division 10, Section 10.07 - Measurement and Payment, and shall include full payment for all Work described in this Section.

Payment shall be made under the following unit:

ITEM	UNIT
Remove and Reset Parking Meter	Each

SECTION 70.10 TRAFFIC MARKINGS

Article 10.1 General

The Work under this Section shall consist of performing all operations pertaining to furnishing all materials; placing painted and methyl methacrylate traffic markings and applying glass spheres thereto; and retroreflective preformed patterned pavement tape traffic markings. Contractor shall provide all Work in accordance with these specifications; at the locations shown on the Drawings; the Manual of Uniform Traffic Control Devices (MUTCD), and the Alaska Traffic Manual.

Article 10.2 Materials

A. Paint for Traffic Markings - General Requirements

1. The Contractor shall furnish the name of the company that will manufacture the paint and the location of the plant from where shipments will be made. No material shall be shipped by the manufacturer until it has been sampled, tested, and approved.

2. Traffic Lane Paint shall conform to the current State Specifications.

B. Glass Spheres for Reflectorizing Highway Pavement Markings

Reflective Glass Beads shall conform to the current State Specifications, and shall be supplied with a moisture-resistant coating.

C. Methyl Methacrylate Pavement Markings

1. General Requirements:

a. Contractor shall furnish Methyl methacrylate traffic markings which are manufactured and formulated from new material and are free from defects and imperfections that might adversely affect the serviceability of the finished product. Contractor shall furnish Traffic markings free from dirt and other foreign material such as, but not limited to, surface oils or existing road marking material, and shall cure to a tough serviceable film within the time specified by the manufacturer.

b. Methyl methacrylate traffic markings which are a spray-applied, ambient temperature curing, 2-component system for application on either asphalt or cement concrete surfaces. Traffic markings shall be composed of a Part “A” methyl methacrylate based resin and Part “B” benzoyl peroxide in liquid plasticizer. The mix ratio shall be four (4) parts of “A” to one (1) part of “B.”

c. Glass beads for drop-on applications recommended in writing by the traffic marking material manufacturer and approved by the Engineer.

d. Contractor shall furnish Methyl methacrylate traffic markings Dura-Stripe Type V manufactured by:

TMT – PATHWAY	Phone: 800-835-3357
1675 Commercial Street N.E.	FAX: 800-774-8464
Salem, Oregon 97303	or an approved equal.

Article 10.3 Construction

A. General

This Work shall be done as soon as possible after paving is completed to facilitate traffic.

B. Paint Color

All pavement markings shall conform to the colors shown on the Drawings.

C. Preparation of Surface

Paint will not be applied to pavements which are excessively dirty, damp, or cold. Paint shall not be applied when the pavement temperature is less than forty degree Fahrenheit (40°F). All dirt, oil, grease, and other foreign matter shall be removed from the areas of the pavement upon which the traffic markings are to be painted by a method approved by the Engineer.

D. Types of Lines

The type and color of the lines shall be as shown on the Drawings.

E. Width of Lines

The width and spacing of all lines shall be shown on the Drawings.

F. Application

1. Paint

a. The paint shall be applied with atomizing spray type striping machine, approved by the Engineer. The markings shall have clear-cut edges, true and smooth alignment and uniform film thickness. The wet film thickness shall be twenty (20) mils with a nominal variation not to exceed two (2) mils.

b. The wet film thickness of the in-place paint shall be measured as follows:

Convenient to the location where the road service lines will be placed, test lines shall be laid to adjust the pavement-marking machine. In the path of the test line laid without glass spheres, place a weighted sheet of aluminum foil eighteen by eleven inches (18” x 11”), thumbtacked to a three-quarter inch (3/4”) plywood board. Immediately after the motorized striper (spraying a four inch (4”) strip along the eighteen inch (18”) dimension of aluminum foil) passes over the aluminum foil, quickly roll it up, slip an elastic band over the roll, and weigh it to the nearest 0.1 gram within thirty (30) seconds from the net weight of paint on the foil and the weight per gallon of the sample, calculate the film thickness using the following formula:

$$\text{Film thickness, in} = \frac{A \times 231}{453.6 \times 18 \times 4 \times B} = \frac{A \times 0.007073}{B}$$

Where: A = Weight of paint on foil in grams.

B = Weight per gallon of sample in pounds.

2. Glass Beads

Glass beads shall be applied over the wet painted stripes in a uniform pattern at the rate of five pounds (5 lbs) of glass beads per gallon of paint. The bead dispensers shall be of a type that will mechanically and automatically give such performance. Glass beads shall be applied to all painted traffic markings by the drop-on method.

3. Methyl Methacrylate

a. Contractor shall prepare the roadway areas to receive the methyl methacrylate pavement markings in accordance with this Section and the manufacturer's recommendations. Contractor shall submit a current copy of manufacturer's recommendations at least 5 working days prior to application of traffic markings.

b. Contractor shall apply methyl methacrylate pavement markings as identified in the Contract Documents. The thickness is measured without glass beads.

c. Contractor shall provide a manufacturer's representative to be present on the first day of striping for each type (sprayed or extruded) and additional days as required by the Engineer.

d. Contractor shall not apply striping to new asphalt/P.C.C. until the asphalt/P.C.C. has cured to the satisfaction of manufacturer's representative or the Engineer.

e. The minimum application rate of beading on sprayed markings is twenty pounds (20 lbs) of beads per gallon and twelve pounds (12 ls) of beads per one hundred (100) square feet for extruded markings.

f. The surface temperature of the roadway shall be in the range of 30° to 105° Fahrenheit for stripe application. Contractor shall thoroughly clean and dry the roadway surface.

g. Contractor shall apply methyl methacrylate stripe material with equipment designed and capable of properly mixing at the point and time of application in accordance with the manufacturer's recommendations.

H. Pavement Marking Removal

Pavement markings shall be removed to the fullest extent possible from the pavement by any method that does not materially damage the surface or texture of the pavement or surfacing. Sand or other material deposited on the pavement as a result of removing traffic stripes and markings shall be removed as the Work progresses. Accumulations of sand or other material which might interfere with drainage or might constitute a hazard to traffic are not permitted.

Pavement markings no longer applicable which may create confusion in the minds of motorists shall be removed or obliterated before any change is made in the traffic pattern. Painting over markings is prohibited.

Pavement markings shall be removed by such methods that will cause the least possible damage to the pavement or surfacing. Any damage to the pavement or

surfacing caused by pavement marking removal shall be repaired by the Contractor at his expense by acceptable methods.

Where blast cleaning is used for the removal of pavement markings or for removal of objectionable material, and such removal operation is being performed within ten feet (10') of a lane occupied by public traffic, the residue, including dust shall be removed immediately after contact between the sand and the surface being treated. Such removal shall be by a vacuum attachment operating concurrently with the blast cleaning operation, or by other approved methods.

I. Preliminary Spotting

The Contractor will provide the necessary control points at intervals including all changes of direction and changes in the basic configuration of striping such as at the beginning and ending of no-passing zones on a two-way, two-lane roadway. These points shall be used in preliminary spotting of lines before striping is commenced. The Contractor shall be responsible for preliminary spotting of the lines to be painted and he must obtain approval from the Engineer for all spotting before striping may begin. Preliminary spotting is required for all longitudinal striping.

J. Inlaid Protected Markings

Apply with certified extrusion equipment. Grind the slot to the depth indicated in the Contract Documents and the dimensions specified, using a grinder capable of grinding the slot to the specified depth and width in a single pass. After grinding, obtain approval before placing marking material.

Dispose of asphalt grinding according to applicable federal, state, and local regulations.

Depth of Inlay Slot. Depth of material shall be measured from the peaks created by the groves to the visible surface of the markings. Minimum depth shall be as identified in the Contract Documents with a nominal variation not to exceed forty (40) mils.

Thickness of Inlaid Marking Material. Fill inlay area completely from the bottom of the inlay to the surface of the pavement. Do not overfill the slots.

K. Tolerances of Lane Striping

The Contractor shall keep his work within the following allowable tolerances:

1. Length of Stripe. The longitudinal error within a forty foot (40') length of lane line shall not be more than plus or minus six inches (±6").
2. Width of Stripe. The width of stripe shall not vary more than plus or minus one-half inch (±1/2").
3. Lane Width. The width of lanes shall not vary more than plus or minus four inches (±4") from the widths shown on the Drawings, measured from the edge of pavement or edge of traveled way to center of lane line or between the centers of adjacent lane lines.

4. Stripes on Tangents. Stripes on tangents shall not vary more than plus or minus one inch (1”) laterally within a distance of one hundred feet (100’) when using the edge of the stripe as reference.

5. Stripes on Curves. Stripes on curves shall be uniform in alignment with no apparent deviations from the true curvature.

6. All Stripes. All stripes shall remain within four inches (4”) from the planed alignment when measured to the center of the stripe.

7. Inlay Slot. The inlay slot shall be as identified in the Contract Documents with a nominal variation not to exceed forty (40) mils.

Traffic markings not within the above tolerances will be considered unacceptable under this Section and shall be replaced by the Contractor at no additional cost to the Municipality.

Article 10.4 Measurement

Traffic markings shall be measured by linear foot of traffic marking of the specified width and color complete in place and accepted. Traffic markings consisting of words and symbols shall be paid per item complete in place and accepted.

Removal of traffic stripes and pavement markings as well as repair of any damaged pavement or surfacing caused by the pavement marking removal operations shall be incidental to other items of Work.

Payment for traffic markings is full compensation for preparing and cleaning of pavement, application of painted traffic markings and applying glass beads or spheres thereto, furnishing paint, glass beads, and all other material and equipment necessary to complete the Work described in this Section.

Article 10.5 Basis of Payment

Payment for this Work shall be in accordance with Division 10, Section 10.07 - Measurement and Payment, and shall include full payment for all Work described in this Section.

Payment shall be made under the following unit:

ITEM	UNIT
Traffic Markings (Type) (width)	Linear Foot
Traffic Markings (Type) (words & symbols)	Each
Inlaid Traffic Markings (Type) (width) (depth)	Linear Foot
Inlaid Traffic Markings (Type) (words & symbols) (depth)	Each

SECTION 70.11 STANDARD SIGNS

Article 11.1 General

This Work shall consist of furnishing and installing signs, guide markers, object markers and mileposts. The sign location and type of installation will be as shown on the Drawings or as directed by the Engineer. Work under this Section shall also include removal and relocation, as well as removal and disposal of existing signs, mileposts, and markers. Work under this Section shall also include removal and resetting of sign post assemblies to original location or as directed by the Engineer.

Article 11.2 Materials

Fabricate all standard regulatory, warning, and guide signs for permanent installation with Type IX reflective sheetings that conform to ASTM D4956 and single-span aluminum panel substrates, unless designated otherwise on the Drawings.

All orange construction and maintenance signs shall be fabricated with Type IX (encapsulated lens) reflective sheeting.

All new standard signs for permanent installation shall be of new materials. All sign layouts shall be in accordance with "Alaska Sign Design Specifications." Any sign delivered or installed which does not conform to these specifications shall be replaced by the Contractor at no additional cost to the Municipality.

Concrete for sign post foundations shall conform to Class B-3 per Division 30, Section 30.01, Article 1.4 - Mix.

In the following specifications, a sign's height and width refers to an installed sign's vertical and horizontal dimensions, respectively, and to the length of the sides for diamond shaped signs.

A. Aluminum Sheet

Contractor shall provide sheet aluminum sign panels in one of the following alloys: 6061-T6, 5052-H36, or 5052-H38 that conform to ASTM B-209. The thickness of the aluminum sheet shall be 0.125 inches unless otherwise specified. Alloy and temper designations shall be verified by mill certification.

Treat the aluminum base metal sheets with a conversion coating for aluminum conforming to ASTM B-921 or ASTM B-449, Class 2 standards. The cleaned and coated base metal shall be handled only by mechanical device or by operators wearing clean cotton or rubber gloves. After the cleaning and coating operation, the panels shall be protected at all times from contact or exposure to greases, oils, dust, or other contaminants.

Use single piece sign panels for all signs up to 48 inches by 72 inches. For signs with one or both dimensions larger than the base 48 inch by 72 inch sign panel, assemble multiple single-piece sign panels according to the following:

For signs up to 48 inches high, assemble the single-piece aluminum panels with the 72 inch dimension set horizontally.

For signs between 48.01 and 72.01 inches high, assemble the single-piece aluminum panels with the longer dimension set vertically.

For signs between 72.01 and 96.01 inches high, assemble two rows of single-piece aluminum panels with the 72 inch dimensions set horizontally.

The dimensional tolerance of the panels shall be one-sixteenth inch (1/16”). Metal panels shall be cut to size and shape and shall be free of buckles, warp, dents, cockles, burrs, and any other defects resulting from fabrication. All possible fabrication, including shearing, cutting and punching of holes shall be completed prior to the base metal preparation.

B. Sheet Reflective Materials

Use reflective sheetings that are part of a matched component system made by a single manufacturer. The system shall include the sheetings, process colors, clear coatings, sealants, electronically cuttable films, protective overlay films, and recommended application equipment.

The sheetings shall also pass all performance requirements specified in ASTM D4956 for type IX reflective sheetings, when tested according to the methods specified therein, including the supplementary fungus resistance requirement.

The sheeting manufacturer shall furnish third party test results that verify their sheeting materials meet all performance requirements of ASTM D4956. If the results of the accelerated outdoor weathering test are not yet available, furnish the results of the supplementary artificially accelerated weathering test and provide the date the regular test results will be available.

Furnish reflective sheetings with a class 1 adhesive backing that meets the requirements of ASTM D4956.

Fabricate signs according to the manufacturer’s written recommendations, using the process colors, coatings, sealants, and films made by the manufacturer of the reflective sheetings, and the application equipment recommended by the sheeting manufacturer.

Apply the reflective sheetings with no splices to those aluminum panels that can be oriented to fit on a rectangle with the smaller dimension equal to or less than forty-eight inches (48”). For all other sign panels, apply the reflective sheetings to form butt splices oriented to most efficiently utilize the sheeting material, except no splices are allowed within two inches (2”) of the edge of a sign and in the length of reflective sheetings.

When making the butt splices, match the adjacent pieces as recommended by the manufacturer to assure uniform day color and night appearance. Provide a gap up to one-sixteenth inch (1/16”) wide between the pieces of reflective sheeting.

Seal all cut edges of the reflective sheetings with sealant recommended by the sheeting manufacturer, including legends.

C. Letters, Numerals, Arrows, Symbols, Border

Letters, numerals, arrows, symbols, border, and other features of the sign messages shall be of the type, size, and series as specified by the Alaska Traffic Manual or the Alaska Sign Design Specifications.

Completed letters, numerals, and other units shall be formed to provide continuous stroke width with smooth edges and shall present a flat surface free of warp, blisters, wrinkles, burrs, and splinters.

Fabricate the legend on signs using one of the following processes. For signs fabricated using the two screened processes, apply a clear coat over the entire face of each sign using a manufacturer recommended product.

For signs with a black legend, apply opaque black ink to form the legend on the reflective sheeting using the silk screened process.

For signs with a white legend on a colored background, apply transparent ink to all areas of the white reflective sheeting, except the legend, to form the background using the reverse silk screened process.

Apply electronically cut colored films that include adhesive to the reflective sheeting, similar to 1 and 2.

Cut the legends from the requisite color of type IX reflective sheetings and apply them to the reflective sheeting. Orient all elements of the legend in the same direction on the reflective sheeting before cutting them out.

D. Frames

All rectangular signs, over fifty-three inches (53") measured along the horizontal axis, and all diamond shape signs sixty inches by sixty inches (60" x 60") and larger shall be framed unless otherwise specified. The frames shall be constructed of aluminum as indicated on the Drawings. All framing dimensions shall have a one-eighth inch (1/8") tolerance unless otherwise specified.

The frame shall be affixed to the sign with three-sixteenth inch (3/16") diameter aluminum rivets. The maximum rivet spacing shall be twelve inches (12") on centers. No rivets shall be placed closer than three-eighths inch (3/8") from the edge of the aluminum face sheet.

All joints of the aluminum frame may be welded with an inert gas shielded - arc welding process using 4043 electrode filling wire in accordance with good shop practice. The width of the fillet shall be equal to the wall thickness of the smallest framing member being welded.

E. Test Procedures and Inspections

1. Adherence

   The test panel, after a 72-hour curing time, shall be immersed in 95°F. +3° water for a period of 24 hours. Immediately after removal from the bath, the reflective sheeting shall be sufficiently bonded so that it cannot be readily removed from the aluminum surface with a one inch (1") round nose spatula. If the sheeting can be peeled rather than chipped from the surface, the bond is considered unsatisfactory.

2. Solvent Resistance

   Test shall be in accordance with Federal Specification L-S300B 4.3.6

3. Accelerated Weathering

   Test shall be in accordance with Federal Specification L-S 300B 4.3.9.

4. Resistance to Heat, Cold, and Humidity

   Test shall be in accordance with Federal Specification L-S-300B 4.3.10.

5. Tensile Strength and Elongation

   Test shall be in accordance with Federal Specification L-S 300B 4.3.15.

F. Post Materials

Provide sign posts that conform to the following specifications for installing the post mounted signs specified in the Drawings.

Perforated Steel Posts.

1. For sign posts, install perforated steel tubes that conform to ASTM A-653. Provide tubes fabricated from 0.105 inch thick (12 U.S. Standard Gauge) sheet steel zinc coated on both sides to minimum coating thickness designation G-90. Furnish tubes formed with square cross sections and sheet steels rolled from structural grade steel with 50 ksi yield strength.
2. All tubes shall be perforated along the centerline of each side for their entire length with seven-sixteenth inch (7/16”) diameter holes on one inch (1”) centers. All perforations shall be free from burrs.
3. Furnish perforated tubes that are straight and feature a smooth, uniform finish without splices. Consecutive one-quarter inch (1/4”) size tubes shall telescope freely for a minimum length of ten feet.
4. Furnish the tube sizes specified in the Drawings in lengths that will provide one-piece sign posts when the signs are installed according to the Standard Details that apply, regardless of ground cross section.

Article 11.3 Construction

All sign post foundations shall be cast in excavated holes. Depth of embedment shall be as shown on the Standard Details unless otherwise directed by the Engineer.

Surplus excavated material shall be disposed of along the adjacent roadway or as directed by the Engineer.

Cut each perforated tube to provide the sign mounting-height specified in the Section 70 detail that applies. Adjust each tube length to account for the height of the signs, the difference in elevation between the mounting height reference and the top of the foundation, and the one foot length inserted into the foundation. Remove all burrs from the cut end.

Guide Marker reflectors shall be installed after the posts have been set in place.

Sign panels shall be attached to posts, electroliers, traffic signal standards, bridge rails, piers, and abutments with fastening hardware of the types and sizes shown on the Standard Details. On non-frame mounted signs attached to signal pole mast arms the Contractor shall install two inch (2”) diameter wind washers, colored to match the sign face, between the fastener head and the sign. Use rust-resistant washers fabricated from a material equal in strength to the sign blank. All fastening hardware shall be furnished by the Contractor. All signs shall be mounted so that they are level.

Existing signs and mile posts that are removed and relocated shall be placed on a new base and shall conform to the Drawings or as directed by the Engineer.

Bases from removed or salvaged signs shall be removed and the ground restored to match the surrounding area. Restoration is considered incidental to the sign bid item.

Contractor shall salvage and deliver signs, posts, and associated hardware designated on the Drawings for Salvage to the Municipal Traffic Sign Shop, 343-4384. Contractor shall remove sign from post before removal and delivery to the Municipal Traffic Sign Shop. Contractor shall remove the sign(s) and associated hardware without damaging the post or sign face. Contractor shall replace sign components damaged or destroyed due to Contractor's operations at no cost to the Municipality.

Inspection: All materials and finished signs are subject to inspection and acceptance in place. All surfaces exposed to weathering shall be free of any defects in the coating that may impair the serviceability or detract from the general appearance or color match. The finished signs shall be clean and free from all chatter marks, burrs, sharp edges, loose rivets, delaminated reflective sheeting, and aluminum marks. No repairs shall be made to the face sheet. All signs not conforming to these Specifications shall be rejected and shall be replaced by the Contractor at no additional expense to the Municipality.

Article 11.4 Measurement

The quantity of Standard Regulatory, Warning, and Guide Signs for permanent installation to be paid for shall be the total square footage of legend bearing sign and panel erected in place, including all posts, bases, and all hardware necessary to install the sign(s) at the designated location. No deductions in quantity for corner rounding shall be made. Nominal dimensions for sign sizes indicated on the Drawings shall be used for the purpose of calculating sign pay quantities.

Removal and relocation of existing signs, posts, bases, and all hardware necessary to install the sign at the designated location shall be measured per each sign, completed and accepted in final position. Sign components damaged or destroyed due to the Contractor's operation shall be replaced by the Contractor at no additional expense to the Owner. Object Markers and Guide Markers shall be measured per each, complete in place. One post equipped with two reflectors shall be considered a single marker. One signpost equipped with two or more signs is a single sign assembly.

Salvage of existing signs, posts, bases, and all associated hardware and delivery to the Sign Shop shall be incidental to the Contract unless the bid item "Salvage Sign" is provided in the Bid Proposal.

Article 11.5 Basis of Payment

Payment for this Work shall be in accordance with Division 10, Section 10.07 - Measurement and Payment, and shall include full payment for all Work described in this Section.

Payment will be made under the following units:

ITEM	UNIT
Standard Sign	Square Foot
Remove and Relocate Signs	Each
Remove and Relocate Mile Posts	Each
Salvage Sign	Each

SECTION 70.12 TRAFFIC MAINTENANCE

Article 12.1 General

The Work under this Section consists of performing all the necessary measures to protect and control traffic during the life of the individual project including, but not limited to, furnishing, erecting, maintaining, replacing, cleaning, moving and removing the traffic control devices, construction signs, portable concrete barriers, safety fences, and flagging required to safeguard the traveling public and all administrative responsibilities necessary to implement this Work.

The Contractor shall maintain all roadways, pedestrian, transit, and bicycle facilities within the project limits, and construct and maintain such approaches, crossings, intersections, and other features as may be necessary throughout the life of the Contract. The Contractor shall also have a powered broom (pick-up sweeper type) and water truck with high-pressure capabilities to clean the paved surfaces and along the haul routes.

A Traffic Control Plan (TCP) is required for this project. The Contractor shall provide a TCP approved by the Traffic Engineer, and when the project limits include State right-of-way, the Alaska Department of Transportation and Public Facilities (ADOT&PF) Regional Traffic Engineer prior to commencement of this project in accordance with the provisions of Division 10, Section 10.04, Article 4.13 - Traffic Control Plan. The Contractor may submit approved amendments to the TCP prior to commencement of the project. All approvals shall be obtained by the Contractor and shall be considered incidental to the Contract and no separate payment shall be made. When the project limits include state right-of-way, the Contractor shall notify ADOT&PF at least 48 hours before commencing construction.

The Contractor is required to have at least one International Municipal Signal Association (I.M.S.A.) or American Traffic Safety Services Association (A.T.S.S.A.) certified person on the job site during working hours for traffic control and implementation. The person designated will supply the Traffic Engineer with a 24-hour emergency telephone number.

All traffic channelization, detours, lane closures and/or street closures shall conform to the TCP and Division 10, Section 10.04, Article 4.13 - Traffic Control Plan.

Article 12.2 Traffic Control Plan

A TCP is a graphic/text plan that describes traffic control to be used for facilitation of road users (drivers, bicyclists, and pedestrians, which include people with disabilities) through a temporary traffic control zone or an incident area. The degree of detail in the TCP depends on the nature and complexity of the project. The TCP may include, but not be limited to, such items as signs, portable concrete barriers, barricades, traffic cones, special signs, warning lights, portable changeable message board signs, flaggers, pilot cars, work zone pavement markings, temporary roadways, and all other items required to direct traffic through or around the construction zone in accordance with these specifications, the Manual on Uniform Traffic Control Devices (MUTCD), published by the US Department of Transportation, the State of Alaska Traffic Manual (ATM), and the Alaska Sign Design Specifications (ASDS). These TCPs shall also address placement of traffic control devices including location, size, mounting height,

and type. The details shown for signs shall include the code designation, size, and legend in accordance with the ATM and the Alaska Sign Design Specifications (ASDS). The TCP shall also indicate the method of safely routing pedestrian and bicycle traffic through or around the construction zone.

The Contractor shall submit a TCP for the project prepared by a certified traffic control designer. The TCP shall be approved by the Traffic Engineer and, if the Traffic Engineer determines that a state route is affected by the TCP, approved by the State of Alaska, Department of Transportation and Public Facilities Regional Traffic Engineer. The Contractor shall respond and make field changes as the Traffic Engineer directs.

In cases of emergency road closures or excavations, the Contractor may commence work without an approved TCP. All traffic control for the emergency work shall be done in compliance with all applicable federal, state, and municipal rules and regulations. The Contractor shall secure a permit and approved traffic control plan on the next working day after implementation of emergency traffic control.

No Work shall occur within rights-of-way or easements for public streets, highways, or other public improvement projects until the Contractor has implemented an approved TCP for the Work proposed. The number of signs indicated on the TCP is a minimum. If unsafe conditions occur, the Traffic Engineer may require additional signs/devices at no additional cost to the Owner.

Article 12.3 Pedestrian Traffic

The Contractor shall provide pedestrian access in accordance with the requirements of Division 10, Section 10.04, Article 4.10 - Protection of Persons and Property, and Article 4.12 - Public Convenience and Access.

In addition, the Contractor shall provide and maintain a pedestrian traffic route through the Project for the duration of the Project or until a permanent pedestrian walkway has been completed. The route shall be signed and delineated such that it is obvious and recognizable to the pedestrian. The route shall be established in a location within the Project limits, at a distance which will help to eliminate interference between pedestrians and construction operations. The location of the route may change throughout the duration of the project, depending on locations of construction operations, and each location shall be approved by the Traffic Engineer. Safety fencing shall be required along the pedestrian route as necessary to separate work zone from the pedestrian route.

Article 12.4 Work Site Traffic Supervisor

The Contractor shall provide a Work Site Traffic Supervisor whom shall be responsible for the Contractor's maintenance of traffic operations on a 24-hour basis. The Work Site Traffic Supervisor shall meet the following minimum requirements:

1. Is currently certified as a Work Site Traffic Supervisor by the American Traffic Safety Services Association (A.T.S.S.A.); or
2. Is currently certified as a Work Zone Traffic Safety Specialist or a Work Zone Safety Specialist by the International Municipal Signal Association (I.M.S.A.); or
3. Is currently certified as a Work Site Traffic Technician by A.T.S.S.A.

If the individual is certified under Items 2 or 3 above, the Contractor shall submit, prior to Work requiring traffic control, documentation that the individual has also obtained:

1. A minimum of 12 months of supervisory level work in Work Site Traffic Control; or
2. One year of having been in responsible charge of such Work. The term “in responsible charge” shall be construed to mean having been in a position of accountability for the selection of devices and for their placement in the traffic control system, or for the continued operation of the system. Having persons that actually perform the labor under one's control would satisfy this requirement. Provide at least one reference, including current address and telephone number, for each project which “in responsible charge” experience is claimed.

The Work Site Traffic Supervisor's duties shall include the following:

1. Understand the requirements of the ATM, the Drawings, and the Specifications.
2. Prepare the TCPs and public notices and coordinate traffic maintenance operations with the Traffic Engineer.
3. Inspect the condition and position of all traffic control devices in use on the Project and ensure that all traffic control devices are in proper working order, clean, visible, and conform to the approved TCP in use. The inspection shall occur daily on smaller projects and more frequently on more complex projects. All devices shall be inspected during hours of darkness so that effectiveness of the device placement can be evaluated and adjustments made, if required, to afford maximum nighttime visibility and delineation. These inspections shall be documented in a bound field book. The field book shall be made available to the Engineer for review on a daily basis and shall become the property of the Engineer upon completion of the Work.
4. Supervise the repair or replacement of damaged or missing traffic control devices.
5. Review and anticipate appropriate traffic maintenance needs and ensure that the proper traffic control devices necessary for safe and efficient traffic movement are available.
6. Hold weekly traffic safety meetings with the superintendents and foremen of the Contractor and subcontractors prior to beginning construction. The Contractor shall provide the Traffic Engineer the opportunity to attend these meetings.

Article 12.5 Materials

Materials for traffic control devices shall conform to the requirements set forth below:

1. Signs. Permanent Construction Signs, Construction Signs, and Special Construction Signs including sign supports shall conform to the requirements of Section 70.11 - Standard Signs, ADOT&PF Standard Specifications for Highway Construction; the ATM; and the Alaska Sign Design Specifications (ASDS).

2. Portable Sign Supports. Contractor shall provide portable sign supports that are wind resistant with no external ballasting and capable of supporting a forty-eight by forty-eight inch (48" x 48") traffic control sign such that the height of the sign above the adjacent roadway surface conforms to the ATM. The sign support shall support the traffic control sign vertically.

3. Barricades and Vertical Panels. Contractor shall provide barricades and vertical panels that are constructed of wood, metal, or plastic, and conform to the requirements of the ATM. Type III barricades shall have a minimum width of eight feet (8'). Contractor shall equip barricades with warning lights.

4. Warning Lights. Contractor shall provide Type A (low intensity flashing), Type B (high intensity flashing), or Type C (steady burn) warning lights conforming to the requirements of the ATM.

5. Drums. Contractor shall provide plastic drums conforming to the requirements of the ATM.

6. Traffic Cones. Contractor shall provide traffic cones and/or tubular markers conforming to the requirements of the ATM. The minimum height is twenty-eight inches (28"). All cones and tubular markers shall be reflectorized.

7. Portable Changeable Message Board Signs. Contractor shall provide portable, truck- or trailer-mounted, changeable message board signs with a self-contained power supply for the sign that has the following features:

    a. Message sign panel large enough to display three lines of nine inch (9") high characters.

    b. Eight-character display per message line.

    c. Message modules containing at least 36 different preprogrammed messages (three line displays) to be selected by the Traffic Engineer.

    d. The capacity to create, preview, and display new messages and message sequences.

    e. A waterproof, lockable cover for the controller keyboard.

    f. An operator's manual, a service manual, and wiring diagram.

    g. Quick release attachments on display panel cover.

    h. Variable flash and sequence rates.

    i. Manual and automatic dimming capability on lamp bulb matrix models.

    j. Variable mounting height of at least seven feet (7') from the pavement to the bottom of the message sign panel.

    k. The capacity to operate with a battery pack for two hours under full load.

8. Portable Concrete Barriers. Portable concrete barriers shall conform to the requirements of ADOT&PF Standard Drawing G-45. Portable concrete barriers shall be equipped with warning lights.

9. Work Zone Pavement Markings. Work zone pavement markings shall be either painted with glass beads or preformed marking tape (removable or non-removable).

Article 12.6 Public Notice

The Work Site Traffic Supervisor shall give notices of changes, delays, or lane/road closures to the following local officials and transportation organizations including, but not necessarily limited to:

1. Anchorage Chamber of Commerce
2. Alaska Travel Industry Association
3. Alaska Trucking Association
4. Alaska State Troopers
5. Alaska Court System
6. Anchorage Police Department
7. Anchorage Fire Department
8. Local Emergency Medical Services
9. Anchorage Public Transportation
10. ASD Pupil Transportation
11. U.S. Postal Service
12. Local Schools and Universities
13. MOA Parks and Recreation
14. Volunteer Fire Departments (applicable if operating in the project area)
15. Local Solid Waste Utilities

The Contractor shall also provide the Alaska State Troopers, Anchorage Police Department, and Anchorage Fire Department with a list of radio frequencies and cellular telephone numbers used on the project, and the 24-hour telephone numbers of the Work Site Traffic Supervisor and the Project Superintendent. This contact information shall be for alerting the Contractor of emergencies which will require passage of emergency vehicles through the project. When so notified, the Contractor shall use all equipment and effort necessary to expedite rapid passage.

Advertisement and/or public notice requirements shall be based on roadway classification in the Official Streets and Highways Plan (OSHP) for the Municipality of Anchorage.

On streets listed as minor arterials and higher, the Contractor shall provide a minimum advertised public notice of seven (7) days in advance of the closure and seventy-two (72) hours of “on site” notice. The notice shall contain the days, times, and locations of the closure. The Contractor shall advertise the closure though the Municipality of Anchorage’s construction project and closure website (www.anchorageroads.org) and subscriber mailing list.

On streets listed as collectors, Contractor shall provide a minimum of seventy-two (72) hours of “on site” notice prior to the closure.

No published advertisement is required on other streets.

The published advertisement shall be displayed through the www.anchorageroads.org website and subscriber mailing list. The Contractor shall provide the Traffic Department with the Contractor’s name, effective dates of the closure, and detailed traffic information. The Traffic Department will publish the information electronically on a weekly basis until the completion of the project. The “on site” advertisement shall consist of changeable message boards or similar approved notification to motorists and pedestrians. Contractor shall promptly cancel advertisements after the closure is completed or the traffic control is removed.

Article 12.7 Traffic Control Devices

Prior to the start of construction operations, the Contractor shall erect such permanent and temporary traffic control devices as may be required by the approved Traffic Control Plan (TCP). Traffic control devices shall be operated only when they are needed and only those devices that apply to conditions that exist shall be used. Advisory speeds, when necessary, shall be provided in the TCP and approved by the Traffic Engineer.

Following the completion of Work in a closure area, all traffic control devices relating to the closure shall be removed. Sign panels that are not removed shall be entirely covered with either metal or plywood sheeting.

The Traffic Engineer may require a different TCP specifically for winter shutdowns.

Contractor shall keep clean reflective sheeting on signs, drums, barricades, and other devices. Contractor shall promptly replace any devices with scratches, rips, or tears in the sheeting deemed unacceptable by the Engineer at no additional expense to the Owner.

Article 12.8 Authority of the Engineer

When, in the opinion of the Engineer, conditions are such that the safety and/or convenience of the traveling public are adversely affected, the Engineer will immediately notify the Contractor in writing. The notice will state the defects, the corrective actions required, and the time required to complete such actions. In no case shall this time exceed twenty-four (24) hours. In the event that the Contractor fails to take the corrective actions within the specified time, (a) the Engineer will immediately direct that the offending operations cease until the defects are corrected, and (b) the Engineer reserves the right to order the corrective actions be accomplished by outside forces. The Engineer will deduct the cost of Work by outside forces from any moneys due or that may become due under the terms of this Contract.

Article 12.9 Execution

The Contractor shall maintain traffic control in accordance with the approved Traffic Control Plan (TCP). The Contractor shall submit a new TCP each time traffic control is revised. Approval of each new TCP is required.

The Contractor shall furnish all traffic control devices necessary to fulfill the requirements of this specification, including construction signs, barricades, portable concrete barriers, safety fence, and flaggers. Said traffic control devices are considered

incidental to this item. All such devices shall conform to the Alaska Traffic Manual (ATM). Paved road detours and gravel pedestrian detours are also incidental to this item.

The Contractor shall protect and adequately delineate open trenches, ditches, pavement edge drop-offs, and other excavations and hazardous areas with barricades as required by OSHA. Open trenches with drops of two feet (2') or greater adjacent to the roadway shall have portable concrete barriers installed with sloping end(s). All barricades and portable concrete barriers in place at night shall have warning lights installed in accordance with the ATM.

Unless otherwise provided hereinafter, the Contractor shall maintain all roadways open to traffic. Temporary closure of residential, commercial, or street approaches requires prior approval of the Engineer. The Contractor shall provide access through the project for emergency vehicles. Contractor shall properly sign and/or flag all locations requiring redirection or stopping of the traveling public.

The Contractor's equipment shall stop at all points of intersection with the traveling public unless satisfactory traffic control measures, approved in writing by the Engineer, are installed and maintained by the Contractor.

Where required on the Drawings, the Contractor shall bypass traffic over a paved detour route. When no longer required, the detour shall be removed and the approaches obliterated. Construction of the detour will be considered incidental to bid item "Traffic Maintenance."

The Contractor shall provide flagger(s) any time operations may affect safety, or as directed by the ATM or the Engineer. Flagger(s) are required at all times when one-lane traffic is in effect. All flagging operations shall conform to the procedures outlined in the ATM.

Article 12.10 Measurement

All Work in this Section is measured by lump sum and shall consist of all labor, materials, and equipment required to provide the Work Site Traffic Supervisor, all TCPs and TCP revisions, public notices, paved traffic detours, pedestrian and bicycle detours, and all traffic control devices. Work and materials required to provide temporary asphalt surfacing and temporary painted traffic markings shall not be paid separately and shall be considered incidental to the Work described in this Section.

Article 12.11 Basis of Payment

Payment for this Work shall be in accordance with Division 10, Section 10.07 - Measurement and Payment, and shall include full payment for all Work described in this Section.

Payment shall be made under the following unit:

ITEM	UNIT
Traffic Maintenance	Lump Sum

SECTION 70.13 BOLLARDS

Article 13.1 General

The Work under this Section consists of all labor, equipment, and materials necessary to complete the construction of wood, concrete pipe, and removable steel bollards as shown on the Drawings. Where existing bollards are removed prior to reuse, Contractor shall erect "hasty" fence or snow fence to deter vandalism by motorized vehicles.

The following Applicable Standards shall be used:

AMERICAN SOCIETY FOR TESTING AND MATERIALS (ASTM)

ASTM A 36M	(1997a) Carbon Structural Steel
ASTM A 123	(1989a) Zinc (Hot-Dipped Galvanized) Coatings on Iron and Steel Products
ASTM A 500	(1996) Cold-Formed Welded and Seamless Carbon Steel Structural Tubing in Rounds and Shapes
ASTM A 501	Standard Specification for Hot-Formed Welded and Seamless Carbon Steel Structural Tubing
ASTM A 615/A 615M	Standard Specification for Deformed and Plain Billet-Steel Bars for Concrete Reinforcement
ASTM C 150	Portland Cement

West Coast Lumber Inspection Bureau standard grading and dressing rules

Western Wood Products Association standard grading and dressing rules.

Article 13.2 Materials

A. Wood Bollards

1. Storage and Protection: Protect lumber from weather. Store inside whenever possible.
2. Grading Rules: Standard grading and dressing rules of the West Coast Lumber Inspection Bureau or the Western Wood Products Association. Each piece of yard and structural lumber shall bear official grade mark of the appropriate bureau or association. Provide Common No. 1 or better Hem/Fir wood, surfaced four (4) sides unless otherwise noted on the Drawings, and kiln dried. Moisture content shall not exceed nineteen percent (19%).
3. Preservative Pressure Treatment
    a. Pressure-treat all wood in direct contact with ground with chromate copper arsenate, Type II (AWPA P-5) with a retention of 0.45 lbs. per cubic foot of wood. Contractor shall submit a certificate of treatment to the Engineer for approval prior to use on the Project.
    b. After treatment, wood shall be clean, of natural color and finish, non-corrosive, water repellent, paintable, odorless, dry, and non-staining.
    c. Cut Wood bollards to length necessary for construction before preservative pressure treatment is applied.

4. Paint: Stain Wood bollards with two coats Color Shield '4000' Alkyd Flat stain, or approved equal. Color to be Russet Brown, or similar. Apply stain to clean dry surface, free of dust or dirt, in accordance with the manufacturer's recommendations and specifications.

B. Concrete Pipe Bollards

Contractor shall use only new products in construction and installation of concrete pipe bollards. Standard products of a manufacturer regularly engaged in the manufacture of such products. The materials provided shall be of a type with proven satisfactory use for at least two years.

1. Concrete

Portland cement shall conform to ASTM C 150 Types I, II, or III.

2. Finish

Finish shall be galvanized. Exposed surfaces and edges shall be rounded, polished, or sanded. Finish shall be non-toxic, non-glare, and resistant to corrosion

3. Galvanizing

After fabrication, hot-dip galvanized components in zinc in accordance with ASTM A 123. Remove Tailings and sharp protrusions formed as a result of the hot-dip process and burnish exposed edges.

4. Tubing

Provide Schedule 40 steel tubing of the size specified in the Drawings.

5. Paint

Prime Tubing and cover with two coats minimum of dark green powder coat paint in accordance with the manufacturer’s instructions. Top coat with two coats Yellow Carboline 139, unless guard post cover or sleeve is to be installed.

C. Removable Steel Bollards

Furnish hardware as necessary and as detailed for the project. Items include bolts, nuts, anchor bolts, washers, nuts, and rods (ASTM A-307). Hot-dip galvanize all bolts, nuts, washers, and plates in accordance with ASTM A-123.

Provide steel that conforms with ASTM A-36 structural carbon steel, shop fabricated and galvanized.

Painting: Etch galvanized surface with “Galvaprep.”

D. Guard Post Cover/Sleeve

Provide guard post covers molded from a durable polyethylene with ultra-violet (UV) stabilizers to ensure product life and color fastness.

Secure the polyethylene guard post cover or sleeve in accordance with the manufacturer’s recommendations. Provide Carsonite SAV-T Sleeve, the guard post cover or sleeve, or approved equal.

Article 13.3 Construction

A. Acceptance of Existing Surfaces

The Contractor shall verify that finished grade and other operations affecting mounting surfaces have been completed prior to the installation of bollards. Install Bollards plumb and true in accordance with the approved manufacturer's instructions or recommendations.

B. Installation

For concrete pipe bollard, provide footing as shown on Drawings. Slope drainage from tubing at two percent (2%) grade. Place concrete inside steel pipe or tubing for full extent. Rod concrete to remove air voids. Dome top to provide clean transition from top surface to bollard sides. Do not leave exposed edge. Provide brushed finish to concrete dome.

Install bollards plumb, level and true to line. Top of a row of bollards shall be maintained at a consistent level above adjacent ground.

C. Removable Bollards

Install bollard base plate flush with top of paved trail. Install bollards plumb, level, and true to line. Use only three-sixteenth inch (3/16") fillet welds. Grind all edges smooth.

Fasteners: Padlocks for removable bollards shall be American Lock, WWE Series 3560 purchased from Action Locksmith. Cores shall be keyed to Municipality Of Anchorage cores matched to a 645 key. Installation of the cores must be authorized by Facilities Management at 343-8270. Padlocks are incidental to this pay item.

D. Clean Up

Clean the site of all materials associated with the installation. Clean surfaces of dirt, stains, filings, and other blemishes occurring from shipment and installation. Provide cleaning methods and agents according to manufacturer's instructions or as indicated. Remove excess concrete.

Article 13.4 Method of Measurement

Measurement will be based on complete units in place for all bollards.

Measurement for concrete pipe bollard with sleeve shall be for a concrete pipe bollard with polyethylene guard post cover or sleeve installed in place.

Measurement for “Remove Bollard” shall be for each bollard removed and disposed of as directed on the Drawings. Footings, anchoring devices, and other items shown on the Drawings shall be considered incidental to the bid item “Removable Bollard” and no separate payment shall be made.

Any other items required for a complete and finished installation shown on the Drawings are measured separately for payment purposes.

Article 13.5 Basis of Payment

Payment for this Work shall be in accordance with Division 10, Section 10.07 - Measurement and Payment, and shall include full payment for all Work described in this Section.

Payment shall be made under the following unit:

ITEM	UNIT
Bollard (Type) (Color as appropriate)	Each
Remove Bollard	Each
Remove & Reset Bollard	Each

SECTION 70.14 REMOVE GUARDRAIL

Article 14.1 General

The Work under this Section consists of providing all operations and furnishing all equipment and materials pertaining to the removal and disposal of guardrail designated for removal on the Drawings or as directed by the Engineer.

Article 14.2 Construction

Contractor shall remove the guardrail, bolts, and supporting posts and deliver them to a location as directed by the Engineer. If guardrail and supporting posts are not salvaged, Contractor shall provide a disposal site for the removed guardrail, bolts, and supporting posts in accordance with the provisions of Division 10, Section 10.04, Article 4.9 - Disposal Sites.

Excavation and backfill required in the removal of the guardrail, bolts, and supporting posts is incidental to the bid item. Contractor shall backfill the excavation with native non organic material.

Article 14.3 Measurement

Removal and salvage or disposal of the guardrail, bolts, and supporting posts is measured per linear foot along the face of the guardrail. Delivery of guardrail and associated components to Engineer-designated location or disposal at Contractor furnished disposal site is incidental to the pay item and no additional payment will be made.

Article 14.4 Basis of Payment

Payment for this Work shall be in accordance with Division 10, Section 10.07 - Measurement and Payment, and will include full payment for all Work as described in this Section.

Payment is made under the following unit:

ITEM	UNIT
Remove Guardrail	Linear Foot

SECTION 70.15 GUARDRAIL

Article 15.1 General

The Work under this Section consists of providing all operations pertaining to the construction of guardrails.

Only one type of material shall be used on any one specific guardrail installation, unless otherwise approved by the Engineer.

Article 15.2 Material

A. Steel rail elements shall conform to the requirements of AASHTO M-180, Class B, unless a lighter weight rail is specifically called for on the Drawings or in the Specifications. Terminal sections shall not be less than twelve (12) gauge.

B. The bolts and nuts shall be galvanized steel and shall conform to the requirement of ASTM A-153, Class C and ASTM A-307.

C. Guardrail posts shall be of either wood or steel as specified.

1. Wood posts shall be grade posts and timbers, or better, as rated by the West Coast Lumber Inspection Bureau, and shall be fabricated from one of the following timber species, unless otherwise approved: a) Douglas Fir; b) Western Pine; c) Larch, or; d) Hemlock. The length and cross-section of the posts shall be as shown on the Standard Details unless otherwise noted. Timber posts shall be treated with one of the following preservative treatments: a) Pentachlorophenol; b) Creosote Oil; c) Creosote-coal tar solution; or d) Creosote-petroleum solution. Preservative treatments for wood shall conform to the applicable requirements of AASHTO M-133.

2. Steel posts shall be of the section and length as specified or as shown on the Drawings. They shall be of copper bearing steel when so specified. Steel shall conform to the requirements of ASTM A 36 for the grade specified, or, for new railroad rail posts, of ASTM A 1 for the unit weight of rail specified.

The posts shall be galvanized or shop painted as specified.

Article 15.3 Construction

The construction of guardrails shall be in conformance with the manufacturer's recommendations, the Standard Details, and as directed by the Engineer.

Article 15.4 Measurement

Guardrails will be measured per linear foot along the face of the rail, including end sections.

Article 15.5 Basis of Payment

Payment for this Work shall be in accordance with Division 10, Section 10.07 - Measurement and Payment, and shall include full payment for all Work described in this Section.

Payment shall be made under the following unit:

ITEM	UNIT
Guardrail (Gauge)	Linear Foot

SECTION 70.16 TEMPORARY GROUP MAILBOXES

Article 16.1 General

The Work under this Section consists of performing all operations pertaining to constructing and maintaining a temporary group of mailboxes for the duration of construction.

Article 16.2 Materials

Contractor shall furnish nails, staples, fastening wires, lumber, and all materials required for construction of the mailboxes.

Article 16.3 Construction

The temporary group mailboxes shall be provided by the Contractor prior to pavement removal. Temporary group mailboxes shall conform to current U.S. Postal Service standards.

Article 16.4 Measurement

Temporary group mailboxes shall be measured by lump sum.

Article 16.5 Basis of Payment

Payment for this Work shall be in accordance with Division 10, Section 10.07 - Measurement and Payment, and shall include full payment for all Work described in this Section.

Payment shall be made under the following unit:

ITEM	UNIT
Temporary Group Mailboxes	Lump Sum

SECTION 70.17 RELOCATE MAILBOX

Article 17.1 General

The Work covered under this Section consists of performing all operations pertaining to the removal and resetting of mailbox(es) affected by construction of this project, and shall include providing temporary mailbox(es). The Engineer will designate which mailbox(es) is/are affected.

Article 17.2 Materials

Contractor shall salvage, from the existing mailbox(es), all reusable materials. Contractor shall replace materials that cannot be salvaged or are damaged by Contractor's operations, at Contractor's expense, with new materials, which as nearly as possible duplicate the kind, quality, and capacity of the original installation.

Contractor shall furnish nails, staples, fastening wires or devices, and all materials required for the construction of such anchors, posts, or other portions of the mailbox, which can be replaced more efficiently than they can be moved.

If the property owner elects to replace any of the existing mailbox materials with other materials in better condition, he will be responsible for furnishing and delivering such materials to the site of the Work.

Article 17.3 Construction

Contractor shall provide temporary mailbox placement and access. Contractor shall set the mailbox(es) in reasonably close conformity to its original location with respect to access points or as the Engineer directs. Contractor shall set posts and anchors at the same depth as in the original mailbox(es) or as directed by the Engineer. Contractor shall replace by equivalent construction permanent anchors, posts, or other parts that cannot be economically moved. Contractor shall paint new materials requiring painting. Contractor shall paint the entire mailbox and support if the paint on the new items does not adequately match or does not meet the satisfaction of the Engineer. Contractor shall place the relocated mailbox(es) in at least as good condition as the existing mailbox(es) before it was moved, behind the curb and gutter in accordance with postal regulations, or as the Engineer directs. Contractor shall place the face of the mailbox(es) forty-four to forty-eight inches (44” to 48”) above the top back of the curb, behind the curb and gutter, or in an alternate location approved by the U.S. Post Office.

Article 17.4 Measurement

Relocating mailboxes shall be measured per unit permanently relocated and complete in place. Each unit shall consist of a stand having a single mailbox or a variable number of mailboxes. No payment shall be made for temporary mailbox placement or relocation.

Article 17.5 Basis of Payment

Payment for this Work shall be in accordance with Division 10, Section 10.07 - Measurement and Payment, and shall include full payment for all Work described in this Section.

Payment shall be made under the following unit:

ITEM	UNIT
Relocate Mailbox	Each

SECTION 70.18 CHAIN LINK FENCE

Article 18.1 General

The Work under this Section consists of providing all materials and operations pertaining to construction of chain link fencing.

Article 18.2 Materials

Material used in the construction of chain link fencing shall be in accordance with the Standard Details and the requirements of the "Chain Link Fence Manufacturers Institute," as described below.

A. General

Posts, gate frames, braces, rails, stretcher bars, and truss rods shall be of steel; reinforcing wires shall be of high carbon steel; and gate hinges, post caps, barbed-wire supporting arms, stretcher bar bands, and other parts shall be of steel, malleable iron or equal except that ties and clips may be of aluminum.

Contractor shall form parts accurately to dimensions. All steel and iron parts shall be zinc coated after fabrication, using zinc grade "E" in accordance with Federal Specifications QQ-Z-351.

The weight of the zinc coating per square foot of actual surface shall average not less than 1.2 ounces and no individual specimen shall weigh less than 1.0 ounce. Zinc-coated surfaces shall be free from imperfectly coated spots, bruised or scaled coating, drops of zinc, sharp projections, and sal ammoniac spots.

Posts, gate frames, rails, and braces shall conform to the dimensions and weights shown in the Dimensions and Weights Table in Article 18.3 – Tables.

B. Fabric

Fencing fabric shall be zinc coated by the hot-dip process after fabrication. The zinc coating shall be commercially uniform. It shall not have less than 1.2 ounces per square foot when tested. Fabric gauge shall be as shown in the Fencing Fabric Size Table in Article 18.3 - Tables.

C. Gates

Gates shall be swing or sliding, single or double, as specified, complete with latches, stops, keepers, hinges, or rollers and roller tracks, and, when so specified, with provisions for three (3) strands of barbed wire above the fabric.

Gate frames shall be constructed of tubular members, and shall be constructed in a manner such as to provide a rigid frame and ample strength and shall be free from sag and twist. Where a barbed wire top is specified, the end members of gate frames shall be extended approximately one foot (1’) above the top member and arranged for attaching three (3) uniformly spaced strands of barbed wire and furnished with bands or other suitable method for securely attaching the wire. Fabric shall be attached securely to the gate frame at intervals not to exceed fifteen inches (15”).

Hinges shall be of heavy pattern, of adequate strength for the gate, and with large bearing surfaces for clamping them in position. The hinges shall not twist or turn

under the action of the gate. The gates shall be capable of being opened and closed easily by one person.

Latches, stops and keepers shall be provided for all gates. Latches shall have the plunger-bar arranged to engage the gate stop, except that for single gates with openings less than ten feet (10') wide, a forked latch may be provided. Latches shall be arranged for locking. Center stops shall consist of a device arranged to be set in concrete and to engage the plunger of the bar latch of double gates. No stop is required for single gates. Keepers shall consist of a mechanical device for securing the free end of the gate when in the full open position.

D. Posts

Posts shall be of the lengths specified and shall be tubular, except that line posts may be H-beam. Dimension and weight shall conform to the Dimensions and Weights Table in Article 18.3 – Tables, unless otherwise specified.

E. Post Braces

Post braces shall be provided for each gate, corner, pull, and end post for use with fabric five feet (5') or more in height, and shall consist of a round tubular brace extending to each adjacent post at midheight of the fabric, and a truss consisting of a rod not less than three-eighths inch (3/8") in nominal diameter from the adjacent post back to the gate, corner, pull, or end post, with a turnbuckle or other equivalent provision for adjustment.

F. Post Tops

Post tops shall consist of ornamental tops or combination tops and barbed-wire supporting arms, as specified. When so specified or when a top rail is to be provided, the top shall be provided with a hole suitable for the through passage of the top rail. The post tops shall fit over the outside of the posts and shall exclude moisture from the tubular posts.

G. Barbed-Wire Supporting Arms

Barbed-wire supporting arms, when specified to be furnished, shall be at an angle of approximately forty-five degrees (45°) and shall be fitted with clips or other means for attached three lines of barbed-wire. The top outside wire shall be approximately twelve inches (12”) horizontally from the fence line and the other wires spaced uniformly between the top of the fence fabric and the outside barbed wire.

H. Top Rails

Top rails shall be round (tubular), shall be in lengths not less than eighteen feet (18'), and shall be fitted with couplings for connecting the lengths into a continuous run. The coupling shall be not less than six inches (6") long, shall provide a substantial connection, and shall allow for expansion and contraction of the rail. Suitable ties or clips shall be provided in sufficient number for attaching the fabric securely to the top rail at intervals not exceeding two feet (2'). Means shall be provided for attaching the top rail to each gate, corner, pull, and end post.

I. Stretcher Bars

Stretcher bars shall not be less than three-sixteenth inch by three-quarter inch (3/16” x 3/4") and shall be of lengths one inch (1") less than the full height of the fabric with which they are to be used. The stretcher bars shall be arranged for attaching the fabric to all terminal posts by threading through the fabric, by bands, or by other positive mechanical means.

J. Ties or Clips

Ties or clips of adequate strength shall be provided for attaching the fabric to lineposts.

K. Fabric Bands

Fabric bands of adequate strength shall be provided for attaching the fabric and stretcher bars to all terminal posts.

L. Tension Wires

A bottom tension wire shall be provided unless otherwise specified. Top tension wire shall be provided, when so specified, in lieu of a top rail. The tension wires shall be of coiled spring wire not less than seven (7) gage plus or minus 0.005 inch in diameter. Ties or clips shall be provided for attaching each wire to the fabric at intervals not exceeding two feet (2').

M. Barbed Wire

Barbed wire shall consist of two (2) strands of twelve and one-half (12.5) gauge wire with fourteen (14) gauge four (4) point barbs spaced approximately five inches (5") apart. All wire shall be zinc coated with a minimum coating of 0.80 ounces per square foot of surface area on twelve and one-half (12.5) gauge wire.

N. Vinyl Clad Fencing

Those components specified to be vinyl-clad or coated shall have a vinyl covering ten to fourteen (10-14) mils in thickness. Fabric is to be nine (9) gauge wire. Products are to be Colorbond II as manufactured by Colorguard Corporation, or approved equal.

Article 18.3 Tables

DIMENSIONS AND WEIGHTS

Use and Section		Nominal Outside Diameter Dims (Inches)	Nominal Weight per Foot, (Pounds)
Tubular End, Corner, and Pull Posts for:			
fabric height: 6 feet and less	Round	2.375	3.65
fabric height: over 6 feet	Round	2.875	5.79
Rails and Post Braces	Round	1.66	2.27

DIMENSIONS AND WEIGHTS (continued)

Intermediate Posts for:			
fabric height: 6 feet and less			
Tubular	Round	1.90	2.72
C-Section		1.875 x 1.625	2.28
fabric height: over 6 feet			
Tubular	Round	2.375	3.65
C-Section		2.25 x 1.70	2.64
Gate Posts with Fabric Over 6 Feet for Gate Leaf Widths:			
leaf width: 6 feet and less	Round	2.875	4.64
leaf width: over 6 to 13 feet	Round	4.000	8.65
leaf width: over 13 to 18 feet	Round	6.625	18.02
leaf width: over 18 to 24 feet	Round	8.625	27.12
Gate Frame Members for:			
fabric height: Less than 6 feet	Round	1.66	1.83
fabric height: 6 feet and over	Round	1.90	2.28
Interior Bracing:	Round	1.66	1.83

FENCING FABRIC SIZE

Recommended Usage	Height of Fabric	Mesh Size	Gauge	Nominal Diameter Coated Wire (Inches)
Heavy Industrial	36” through 144”	2”	6	0.192
Industrial/Residential	36” through 144”	2”	9	0.148
Light Industrial/Residential	36” through 84”	2”	11	0.120
Tennis Court	120” through 144”	1-3/4”	11	0.120

Article 18.4 Construction

A. Grading

All trees, brush and other obstacles which would interfere with the construction of the fence shall be removed and disposed of at a Contractor-provided disposal area and shall be considered incidental to the Contract. The fence shall follow a smooth profile. Throughout the fence length the distance between the ground surface and the bottom tension wire shall not be greater than four inches (4"), nor less than two inches (2"). Where excavation is necessary to meet this requirement, the ground will be graded level not less than one foot (1') on either side of the fence and backslopes of one and one-half to one (1½:1) provided. Where backfill is necessary to meet this requirement, natural surface vegetation will be removed

prior to placing fill material. The top of the fill shall be level for one foot (1') on either side of the fence line and the shoulder slopes shall be one-half foot to one foot gradient (½':1'). Grading for all specific conditions shall be such that water will not be allowed to pond in the immediate area of the fence. Where drainage is required across the fence line, the Engineer shall be consulted and channels provided in accordance with his decision.

B. Posts

All posts shall be set in Class B Portland Cement Concrete footings. The tops of the footings shall be level with the ground, shall be crowned to provide drainage and shall be troweled smooth. The dimensions of the footings shall be as shown on the Drawings. The footings shall be allowed to cure for a period of at least seven (7) days before attaching fabric.

The Contractor shall set the posts vertical and of uniform and equal height above the ground with a maximum horizontal spacing of ten feet (10') center. On straight runs, pull posts shall be provided at intervals not to exceed five hundred (500) lineal feet. Changes in line of thirty degrees (30°) or more shall be considered corner posts. Steep slopes and abrupt changes in topography may require changes in various elements of the fence. The chain link fabric shall be stretched taut and securely fastened to end, corner, or gate posts. The top edge of the fabric shall be fastened to the top rail, and the lower edge of the fabric shall be fastened to the bottom tension wire.

C. Fabric

Place fabric on the side specified, stretched taut, and securely fastened to the posts. Fasten fabric to end, gate, corner and pull posts with stretcher bars and fabric bands spaced at intervals of fifteen inches (15") or less. Fastening to line posts shall be with ties or clips at fifteen inch (15") intervals.

Join rolls of wire fabric by weaving a single strand into the ends of the rolls to form a continuous mesh. Horizontal splices are not permitted.

D. Top Rail

Top rails shall pass through the ornamental tops of the line posts, forming a continuous brace from end to end of each stretch of fence. Join lengths of tubular top rail by sleeve couplings. Secure top rails fastened to terminal posts by pressed steel fittings or other appropriate means.

E. Tension Wire

Provide one continuous length of tension wire between pull posts. Apply sufficient tension to avoid excess sag between the posts. Tie or otherwise fasten tension wires to end, gate, corner, or pull posts by methods approved by the Engineer.

F. General Appearance

Runs of fence shall present the same general appearance and the product of one manufacturer only will be accepted, except for items which do not influence the appearance of the completed fence. No used, rerolled, or open-seam steel will be permitted in posts, gate frames, rails or braces.

Article 18.5 Measurement

Chain link fencing will be measured per linear foot, in place, from outside to outside of end or corner posts, except for the space occupied by gates.

Gates will be measured per each, complete in place for a particular size.

Article 18.6 Basis of Payment

Payment for this Work shall be in accordance with Division 10, Section 10.07 - Measurement and Payment, and shall include full payment for all Work described in this Section.

Unit cost payment shall be made on the following basis:

ITEM	UNIT
Chain Link Fence (Include Heights and Gage)	Linear Foot
Gate (Type and Size)	Each

SECTION 70.19 SILT FENCE

Article 19.1 General

The Work under this Section consists of providing all operations pertaining to construction of temporary silt fence as shown on the Drawings and specified in this Section.

Article 19.2 Materials

Materials for silt fence shall be specified on the Drawings. Silt fence filtration fabric material shall meet the minimum requirements of the Temporary Silt Fence Property Requirements found in Table 7 of AASHTO M288-06.

Article 19.3 Construction

Fence described in this Section shall be installed in accordance with the Drawings, or to the satisfaction of the Engineer. Silt fencing shall remain in place and in good working condition until Work is complete under the Contract. The continued maintenance of silt fence and replacement of damaged items shall be the ongoing responsibility of the Contractor. Additional metal “T” poles shall be installed in areas where additional structural support is required. All silt fences shall be removed upon final acceptance of the Project or as directed by the Engineer.

Article 19.4 Measurement

Silt fence described in this Section will be measured per linear foot, complete and in place.

Article 19.5 Basis of Payment

Payment for this Work shall be in accordance with Division 10, Section 10.07 - Measurement and Payment, and shall include full payment for all Work described in this Section.

Payment shall be made under the following units:

ITEM	UNIT
Silt Fence	Linear Foot

SECTION 70.20 SOIL STABILIZATION

Article 20.1 General

The Work under this Section consists of providing all operations pertaining to placing and maintaining Soil Stabilization Matting material according to the Drawings or specified herein.

Article 20.2 Material

A. Jute Mesh

Jute Mesh shall be cloth of a uniform, open, plain weave of undyed and unbleached single jute yarn. The yarn shall be of a loosely twisted construction and it shall not vary in thickness more than one-half its normal diameter. Jute mesh shall be furnished in rolled strips and shall meet the requirements as follows:

1. Width - forty-eight inches, plus or minus one inch (48" ±1").
2. Seventy-eight (78) warp-end per width of cloth (minimum).
3. Forty-one (41) weft-ends per yard (minimum).
4. Weight to average 1.22 pounds per linear yard with a tolerance of plus or minus five percent (±5%).

Staples shall be U-shaped and shall be approximately six inches (6") long and one inch (1") wide. Machine-made staples may be of No. 11 gauge or heavier steel wire. Hand-made staples shall be made from No. 9 gauge or heavier steel wire.

B. Glass Fiber

Glass Fiber material shall consist of glass processed from the molten state into fibrous form. A multitude of continuous glass fibers (approximately sixty [60] ends) shall be collected together and wound into a package of cylindrical shape. The glass fibers shall be lightly bound together in a ribbon without the use of clay, starch or like deleterious substances and not more than three-quarters of a percent (0.75%) of saponifiable acids. The fibers shall be of a consistency suitable for application by compressed air and shall contain no petroleum solvents or other agents known to be toxic to plant or animal life.

C. Nylon Matting

Nylon matting shall be made from Nylon 6, with a minimum content of five-tenths of a percent (0.5%) by weight of carbon black, monofilaments fused at their intersections to form a bulky mat of open construction. Nylon matting shall be furnished in rolled strips a minimum of thirty-eight inches (38") wide.

Staples shall be a minimum of ten inches (10") in length and shall be T-staples, U-staples, or wood stakes. Metal staples shall be 8- to 11-gauge steel.

D. Excelsior Blankets

Excelsior blankets shall consist of a machine produced mat of curled wood excelsior of eighty percent (80%) six-inch (6") or longer fiber length, with consistent thickness and the fiber evenly distributed over the entire area of the blanket. The

top side of each blanket shall be covered with a photodegradable extruded plastic mesh. The blanket shall be made smolder resistant without the use of chemical additives. Excelsior blankets shall be furnished in rolled strips and shall meet the requirements as follows:

1. Width – forty-eight inches, plus or minus one inch (48” ±1”)
2. Length - one hundred and eighty feet (180’) average
3. Weight Per Roll – seventy-eight (78) pounds, plus or minus ten percent (±10%)

Staples shall be made of wire 0.091 inches in diameter or greater, "U" shaped. Size and gauge will vary with soil conditions.

E. Erosion Control Blankets

Erosion control blanket shall be a machine-produced mat consisting of seventy percent (70%) agricultural straw and thirty percent (30%) coconut fiber. The blanket shall be of consistent thickness with the straw and coconut fiber evenly distributed over the entire area of the mat. The blanket shall be covered on the top side with UV stabilized polypropylene netting having an approximate five-eighths by five-eighths inch (5/8" x 5/8”) mesh, and on the bottom with a polypropylene netting with an approximate one-half by one-half (1/2” x 1/2”) mesh. The blanket shall be sewn together one and one-half inches (1.5”) on centers with biodegradable thread. The straw/coconut fiber erosion control blanket shall be SC150 as manufactured by North American Green, or Owner-approved equivalent. The straw/coconut fiber erosion control blanket shall have the following properties:

Material Content	
Straw	70% (0.35 lb./yd.2)
Coconut Fiber	30% (0.15 lb./yd.2)
Netting	Top side heavyweight UV stabilized (3 lb./1,000 ft^2 approximate weight). Bottom side lightweight photodegradable (1.64 lb./1,000 ft^2 approximate weight).
Stitch	Degradable

Physical Specifications (Roll)	
Width	6.5 feet
Length	83.5 feet
Weight	30 lbs. +/- 10%
Area	60 yd.2
Stitch Spacing	1.5 inch

F. Coir Fiber Roll

Coir (coconut) fiber rolls shall consist of long rolls of the specified diameter of coconut fiber encased in coconut fiber netting.

Fiber shall be one hundred percent (100%) mattress grade coconut fiber, six pounds per cubic foot.

Netting shall be one hundred percent (100%) coconut (coir) two-inch (2”) mesh. Yarn tensile strength shall be fifty-five (55) pounds dry, forty (40) pounds wet.

Coir fiber rolls shall be BonTerra BioLogs, or an approved equal, manufactured by:

BonTerra America
355 West Chestnut Street
Genesee, ID 83842
Phone: (800) 882-9489
E-mail: bonterra@moscow.com.

Article 20.3 Construction

This Work shall be accomplished within forty-eight (48) hours after finish grading of the subgrade or topsoil has been completed.

The rates of application shall be as shown on the Drawings.

Matting material shall not be applied on days when the wind or rain would cause undue erosion or displacement of the material. The soil shall not be disturbed more than necessary. Use of vehicles and tracked equipment will be permitted by the Engineer only if such use does not cause rutting and displacement of the subgrade or topsoil.

Article 20.4 Surface Requirements

The surface shall be smoothed and all gullies and potholes backfilled prior to applying the matting. Contractor shall remove all rocks or clods larger than two inches (2") in size and all sticks and other foreign material which will prevent contact of the matting and surface. If the surface of the subgrade or topsoil is extremely dry, watering may be required by the Engineer prior to placement of the matting. Such watering will be incidental to the Work.

In some instances it may be appropriate to track-walk the prepared surface prior to seeding and stabilization. Contractor shall provide track-walking only if directed by the Drawings or the Engineer.

Article 20.5 Application

Contractor shall install each product in accordance with the manufacturer’s directions.

A. Jute Mesh

If seeding is specified, the jute matting shall be spread within twenty-four (24) hours after the seed has been placed.

Check slots shall be installed as detailed on the Drawings and shall consist of separate full-width four foot (4') strips of jute mesh placed at right angles to the direction of water flow immediately prior to placing the general covering of jute mesh. Check slots shall be made by burying a tight fold of jute mesh vertically in the soil and tamping and stapling in place.

Check slots shall be spaced so that one check slot, junction slot, or anchor slot of the jute mesh occurs every seventy-five feet (75') on gradients of less than four percent (4%) and every fifty feet (50') on gradients greater than or equal to four

percent (4%). On slope drains, a check slot or an end slot shall occur every twenty-five feet (25').

Edges of matting shall be buried around the edges of catch basins and other structures as herein described. Matting must be spread evenly and smoothly and in contact with the soil at all points.

Jute matting shall be held in place by approved wire staples, pins, spikes, or wooden stakes driven vertically into the soil. Matting shall be fastened at intervals not more than three feet (3') apart in three (3) rows for each strip of matting with one (1) row along each edge and one (1) row alternately spaced in the middle. All ends of the matting and check slots shall be fastened at six inch (6") intervals across their width.

B. Glass Fiber Matting

Glass fiber matting shall be of such consistency that it can be applied by use of a blower. Other equipment capable of spreading the continuous glass fiber strands uniformly may be used if approved by the Engineer. Equipment which cuts or breaks the glass fibers shall not be permitted.

The matting shall be spread uniformly at the locations shown on the Drawings and shall be loose enough to allow sunlight to penetrate and air to circulate, but dense enough to shade the ground, reduce rate of water evaporation, and prevent or reduce water or wind erosion.

Glass fiber matting shall be held in place by the application of a CRS-1 asphalt emulsion applied at the rate shown on the Drawings. A hand-operated boom from a spreader may be used to spray the emulsion evenly over the mulch material.

All glass fibers shall be placed and tacked with emulsion in the specified areas within twenty-four (24) hours after seeding, or as directed by the Engineer.

CRS-1 Cathionic emulsion will not be measured or paid separately and is considered incidental to glass fiber matting.

C. Nylon Matting

Matting shall be installed peaked side down. Adjacent strips are to be overlapped two to three inches (2" to 3") and ground fastened at three to five foot (3' to 5') intervals. The entire perimeter of the matting shall be ground fastened in twelve inch (12") deep trenches at three to five foot (3' to 5') intervals and covered with soil.

If seeding is specified, the seeding shall be accomplished within twenty-four (24) hours after placing the nylon matting.

D. Excelsior Blankets

Excelsior blankets shall be unrolled with the netting on top and the fibers in contact with the soils over the entire area. In ditches, the blankets shall be applied in the direction of flow, butted at ends and sides. On slopes, the blankets shall be applied either horizontally or vertically to the slope; ends and sides shall be butted. Staples shall be spaced approximately two linear yards apart, on each side, and one row in the center alternately spaced between each side. Use a common row of staples on adjoining blankets.

If seeding is specified, the excelsior blankets shall be placed within twenty-four (24) hours after the seed has been placed.

E. Erosion Control Blankets

Erosion control blankets shall be spread uniformly at the locations described on the Drawings and shall be loose enough to allow sunlight to penetrate and air to circulate, but dense enough to shade the ground, reduce rate of water evaporation, and prevent or reduce water or wind erosion.

Erosion control blankets shall be unrolled with the netting on top and the fibers in contact with the soils over the entire area. On slopes, the blankets shall be applied vertical to the slope; ends and sides shall be butted. Staples shall be spaced approximately two linear yards apart, on each side, and one row in the center alternately spaced between each side. Use a common row of staples on adjoining blankets.

F. Coir Fiber Roll

The Contractor shall minimize Work site disturbance. The Contractor shall protect existing plants and avoid additional disturbance that can lead to erosion and sedimentation. The Contractor shall prepare the site for installation of the coir fiber roll by removing any large rocks, obstructions, or material that may prevent the coir from making direct and firm contact with the soil.

The Contractor shall install coir rolls level along a horizontal contour. Contractor shall place coir rolls approximately parallel to shoreline. The Contractor shall install coir roll such that approximately one-third (1/3) of its height extends above the mean water elevation.

The Contractor shall select and use wooden stakes made from strong, durable wood species that do not have knots or flaws. The stakes shall be pointed at one end, not wedge shaped. Stakes for coir rolls shall be approximately one and one half by one and one-half inches (1.5" x 1.5"), unless otherwise specified. Stake length shall be specified on the Drawings.

Place live willow stakes in the coir fiber roll by pulling the roll’s fibers apart. If necessary, wedge a pilot bar back and forth to create a hole for the willow stake. Drive or place the willow stake to the base of the coir roll. If driven, Contractor shall ensure that willow stake is not damaged.

Article 20.6 Maintenance and Repair

The Contractor shall maintain the areas covered by matting until all Work on the Project has been completed and accepted. Prior to acceptance of the Work, the damaged areas shall be reshaped, reseeded, and the matting satisfactorily repaired or replaced as herein specified with no additional compensation.

Article 20.7 Measurement

The quantity of Soil Stabilization Matting to be paid for shall be the number of units of one thousand (1,000) square feet, measured to the nearest one-tenth (0.1) unit on the slope of the ground surface.

Method of measurement shall be by length per linear foot of Coil Fiber Roll of the specified diameter complete and accepted in its final position. The bid item shall include

all furnishing and placing coir fiber roll, willow stakes, wood stakes, fiber netting, and all other materials necessary to complete the Work described in this Section

Article 20.8 Basis of Payment

Payment for this Work shall be in accordance with Division 10, Section 10.07 - Measurement and Payment, and shall include full payment for all Work described in this Section.

Unit cost payment shall be made on the following basis:

ITEM	UNIT
Soil Stabilization Matting (Type)	1,000 Square Feet
Coir Fiber Roll (Diameter) with Willow Stake	Linear Foot

SECTION 70.21 FLEXIBLE DELINEATORS

Article 21.1 General

The Work covered under this Section consists of providing all labor, materials, equipment, and transportation required for complete installation of Flexible Delineators.

Article 21.2 Submittals

Contractor shall submit three copies of manufacturer's product data for approval by the Engineer.

Article 21.3 Materials

The Flexible Delineators shall be made of composite material certified to withstand multiple vehicle impacts at high speeds, perform within the temperature extremes of the project location, be resistant to UV light and vandalism. The Delineator shall consist of a corrosion-resistant drivable ground anchor and replaceable tubular composite post, orange color, with reflective sheeting for nighttime visibility. Minimum outside diameter of the post shall be 2", minimum height 60".

The Delineator shall be a Carsonite Composites, Newberry, South Carolina, Model Utility Sentry CIP2 – round, or approved equal. To be considered equal, Delineators must be flexible, replaceable, and have the specified physical properties, dimensions, and color.

Article 21.4 Construction

Contractor shall install Delineators in accordance with the manufacturer's recommendations. Where anchors are embedded in concrete, the Contractor shall install the anchor so that the top of the anchor is flush with the concrete surface.

Article 21.5 Measurement

Delineators shall be measured as complete installations including the drivable ground anchor, replaceable composite post, and all labor required for the installation.

Article 21.6 Basis of Payment

Payment for this Work shall be in accordance with Division 10, Section 10.07 - Measurement and Payment, and shall include full payment for all Work described in this Section.

Payment shall be made under the following unit:

ITEM	UNIT
Furnish and Install Flexible Delineator	Each

MUNICIPALITY OF ANCHORAGE
STANDARD SPECIFICATIONS

DIVISION 70
MISCELLANEOUS
STANDARD DETAILS

STANDARD CONSTRUCTION SPECIFICATIONS
DIVISION 20
INDEX OF STANDARD DETAILS

70-1 Standard Location for New Utilities

70-2 Locations for Existing Utilities (Approval Required for New Utilities)

70-3 Typical Water and Sewer Locations

70-4 Adjustment for Gas Valve Key Box (1/4” thru 4”)

70-5 Adjustment for Gas Valve Manhole

70-6 Standard Method for Shoring Phone/Conduit ACS Approved Method and Procedure #86-1

70-7 Striping Notes

70-8 Intersection Approach Striping

70-9 Left-Turn Pocket Approach Striping

70-10 Raised Median Approach and Two Lanes Drive to Right Striping

70-11 Left-Turn Pocket Approach from Two Way Center Left-Turn Lane Striping

70-12 Two Way Center Left Turn Lane Striping

70-13 Passing on Both Sides of an Obstruction

70-14 Layout Templates for Stencils

70-15 Approach to Railroad Crossing on Two Lane Two Way Highway

70-16 Typical Uncurbed Return with Pathway

70-17 Typical Uncurbed Return without Pathway

70-18 Typical Curb Return with Sidewalk

70-19 Typical Curb Return without Sidewalk

70-20 Post Mounted Sign with Shoulder

70-21 Post Mounted Sign with No Shoulder

70-22 Post Mounted Sign with Guardrail

70-23 Post Mounted Sign Curb without Sidewalk

70-24 Post Mounted Sign Curb with Parkway and Sidewalk

70-25 Post Mounted Sign Curb with Sidewalk without Parkway

70-26 Post Mounted Sign Raised Medians

70-27 Post Mounted Sign Secondary Panel Height and Sign Positioning

70-28 Street Name Signs

70-29 Sign on Round Post

70-30 Street Name on Round Post

70-31 Concrete Foundation for Sign Post
70-32 12” Plate Installation Detail with Supplemental 8” D3-D1 Signs
70-33 Signal Pole Mast Arm Sign Mounting
70-34 Wood Bollard
70-35 Removable Wood Bollard
70-36 Removable Steel Rectangular Bollard
70-37 Steel Bollard
70-38.1 Removable Circular Bollard (Sheet 1 of 2)
70-38.2 Removable Circular Bollard (Sheet 2 of 2)
70-39 Guard Rail Detail
70-40 Cluster Mailbox Location
70-41 Fence Details
70-42 Fence Details

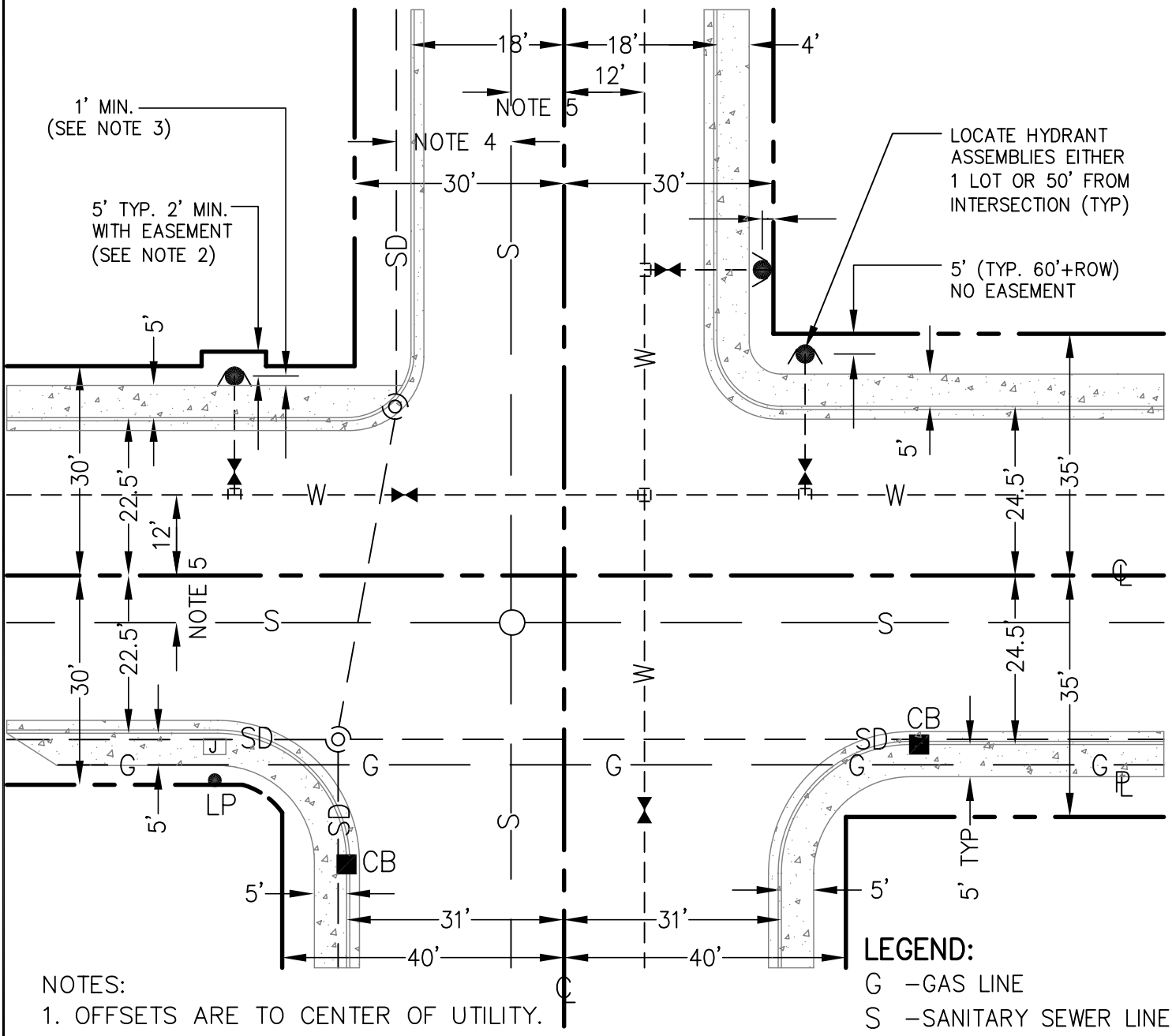

NOTES:

1. OFFSETS ARE TO CENTER OF UTILITY.
2. ADDITIONAL RIGHT-OF-WAY/EASEMENT MAY BE REQUIRED TO MEET MINIMUM SET-BACKS FOR HYDRANTS.
3. SET HYDRANT A MINIMUM OF 5' FROM BACK OF CURB OR 1' FROM EDGE OF SIDEWALK.
4. MAINTAIN SEPARATION DISTANCES AS IDENTIFIED IN THE AWWU DESIGN AND CONSTRUCTION PRACTICES MANUAL, ADEC 18 AAC 72, AND 18 AAC 80.
5. LOCATE SANITARY SEWER BETWEEN 5' AND 6' FROM CENTERLINE. MANHOLE LIDS SHALL BE LOCATED IN THE CENTER OF A TRAVEL LANE. IF THERE IS A TWO-WAY CENTER TURN LANE, THE MANHOLE LIDS SHALL BE PLACED APPROXIMATELY ON THE LINE BETWEEN LANES.
6. ADA REQUIREMENTS SHALL GOVERN WHEN PLACING STORM DRAIN MANHOLE LIDS AND CATCH BASINS IN PEDESTRIAN FACILITIES.

LEGEND:

G –GAS LINE
S –SANITARY SEWER LINE
SD –STORM DRAIN LINE
W –WATER LINE
℄ –R.O.W. CENTERLINE

MUNICIPALITY OF ANCHORAGE	SCALE: NTS APPROVED: REVISED: 8/08	**STANDARD LOCATION FOR NEW UTILITIES**	SECTION # DIV 50, 55, 60 & 70 DETAIL # 70-1

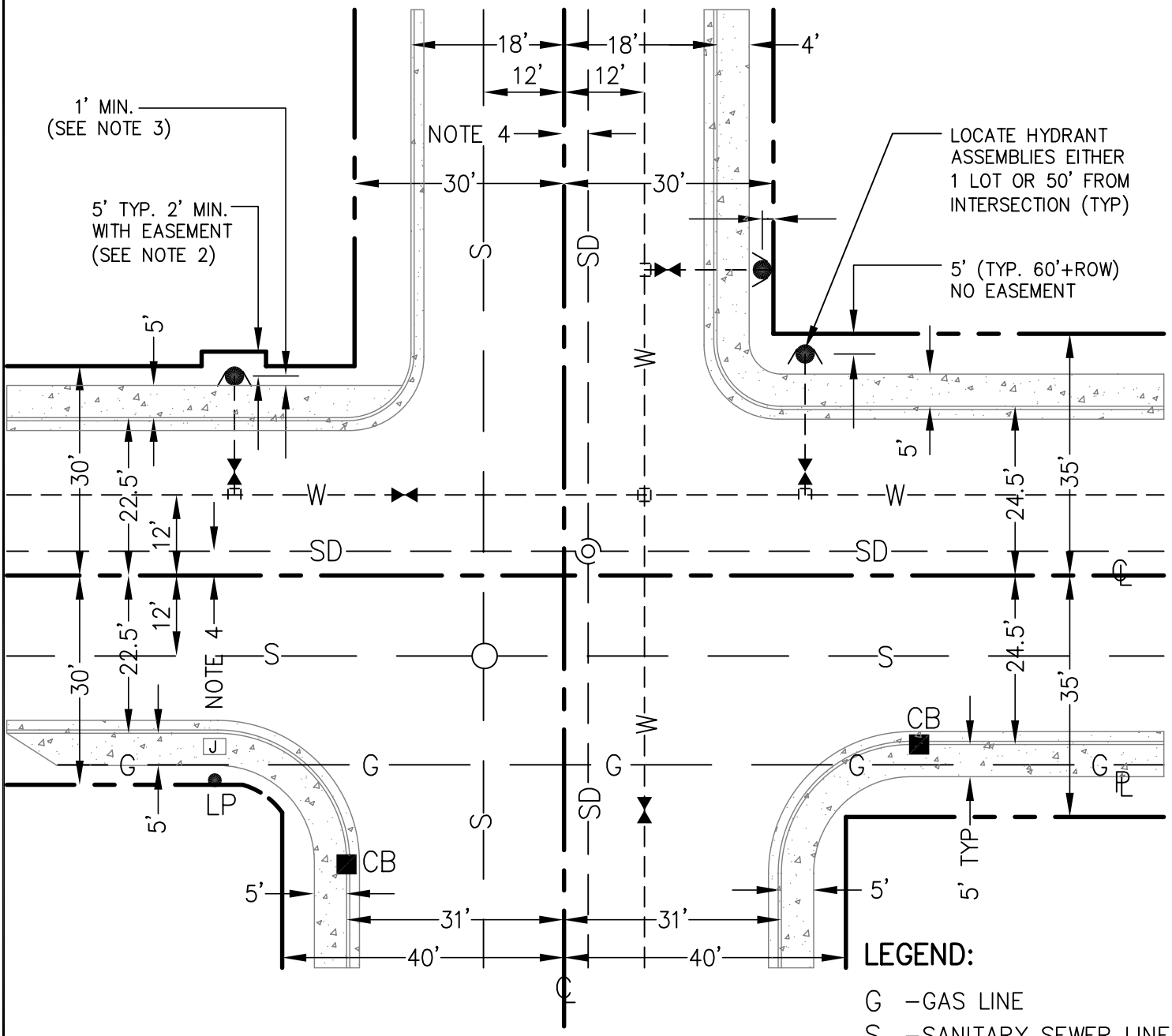

LEGEND:

G –GAS LINE
S –SANITARY SEWER LINE
SD –STORM DRAIN LINE
W –WATER LINE
℄ –R.O.W. CENTERLINE

NOTES:

1. OFFSETS ARE TO CENTER OF UTILITY.
2. ADDITIONAL RIGHT–OF–WAY MAY BE REQUIRED TO MEET MINIMUM SET–BACKS FOR HYDRANTS.
3. SET HYDRANT A MINIMUM OF 5' FROM BACK OF CURB OR 1' FROM EDGE OF SIDEWALK.
4. LOCATE UTILITIES TO MAINTAIN MINIMUM SEPARATIONS AS IDENTIFIED IN THE AWWU DESIGN AND CONSTRUCTION PRACTICES MANUAL, ADEC 18 AAC 72, AND 18 AAC 80.

MUNICIPALITY OF ANCHORAGE	SCALE: NTS APPROVED: REVISED: 8/08	**LOCATION FOR EXISTING UTILITIES (APPROVAL REQUIRED FOR NEW UTILITIES)**	SECTION # DIV 50, 55, 60 & 70 DETAIL # 70–2

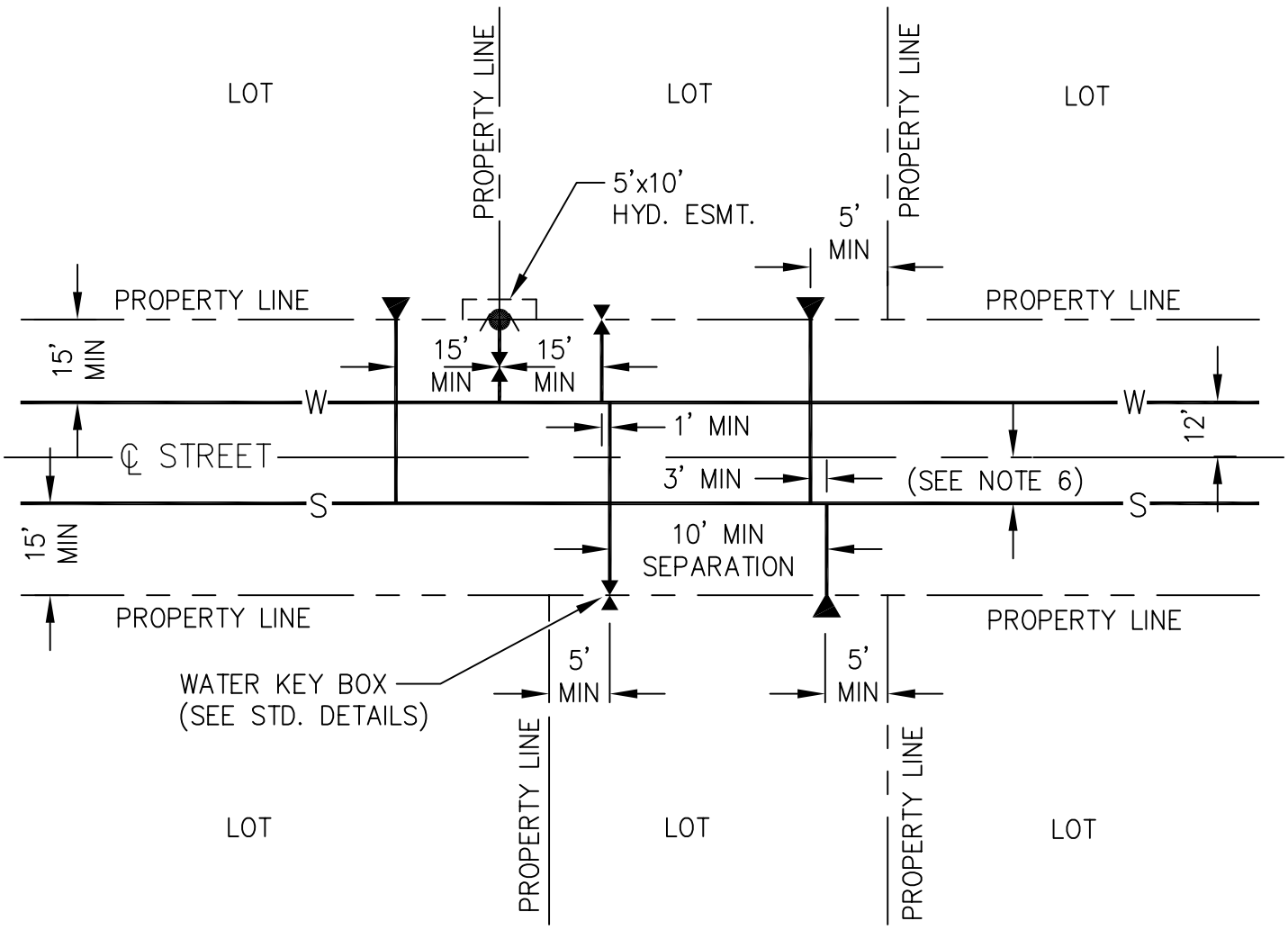

NOTES:

1. SANITARY SEWER SERVICE CONNECTIONS SHALL BE FIVE TO FIFTEEN FEET (5' TO 15') FROM PROPERTY CORNER, IN LOWER ONE–THIRD OF THE LOT TO BE SERVED.
2. WATER SERVICE CONNECTIONS SHALL BE A MINIMUM OF FIVE FEET (5') FROM PROPERTY CORNER OF THE LOT TO BE SERVED.
3. WATER AND SEWER SERVICES SHALL MAINTAIN A MINIMUM TEN FOOT (10') SEPARATION.
4. WATER AND SEWER SERVICES SHALL MAINTAIN A MINIMUM FIFTEEN FOOT (15') SEPARATION FROM FIRE HYDRANTS.
5. LOCATE WATER AND SANITARY SEWER SERVICE TO MAINTAIN A MINIMUM TEN FOOT (10') SEPARATION BETWEEN OUTSIDE OF PIPE AND STORM SEWER, CATCH BASINS, MANHOLES STREET LIGHTING, UTILITY POLES, UTILITY PEDESTALS, METER BASES AND TRANSFORMER PADS.
6. FOR STANDARD LOCATION AND SEPARATION FOR SANITARY SEWER, SEE NOTE 5 ON STANDARD DETAIL 70–1.

MUNICIPALITY OF ANCHORAGE	SCALE: NTS APPROVED: REVISED: 10/08	**TYPICAL WATER AND SEWER SERVICE LOCATIONS**	SECTION # DIV 50, 55, 60 & 70 DETAIL # 70–3

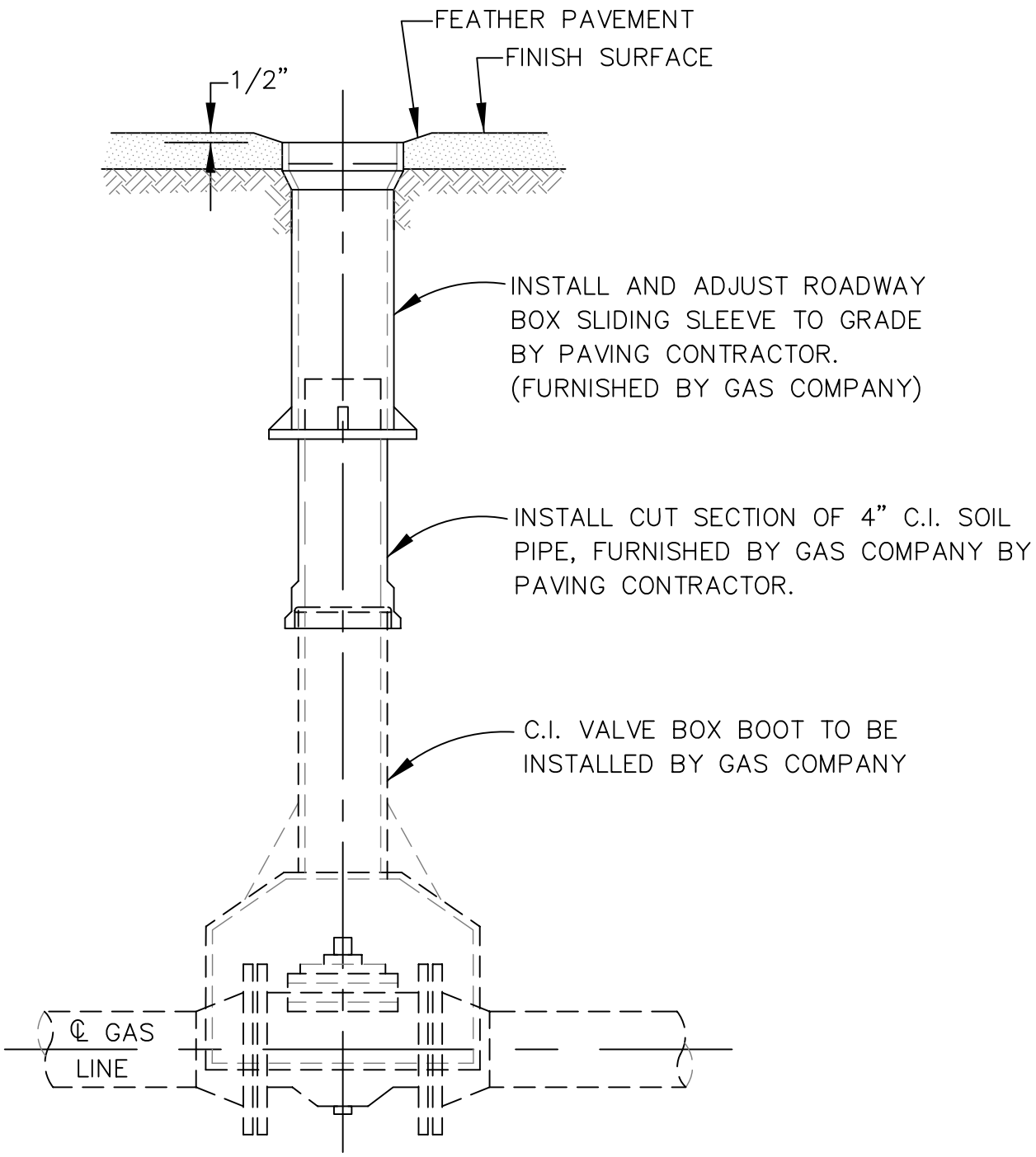

MUNICIPALITY OF ANCHORAGE	SCALE: NTS APPROVED: REVISED: 10/08	**ADJUSTMENT FOR GAS VALVE KEY BOX (1/4" thru 4")**	SECTION # 70.02 DETAIL # 70–4

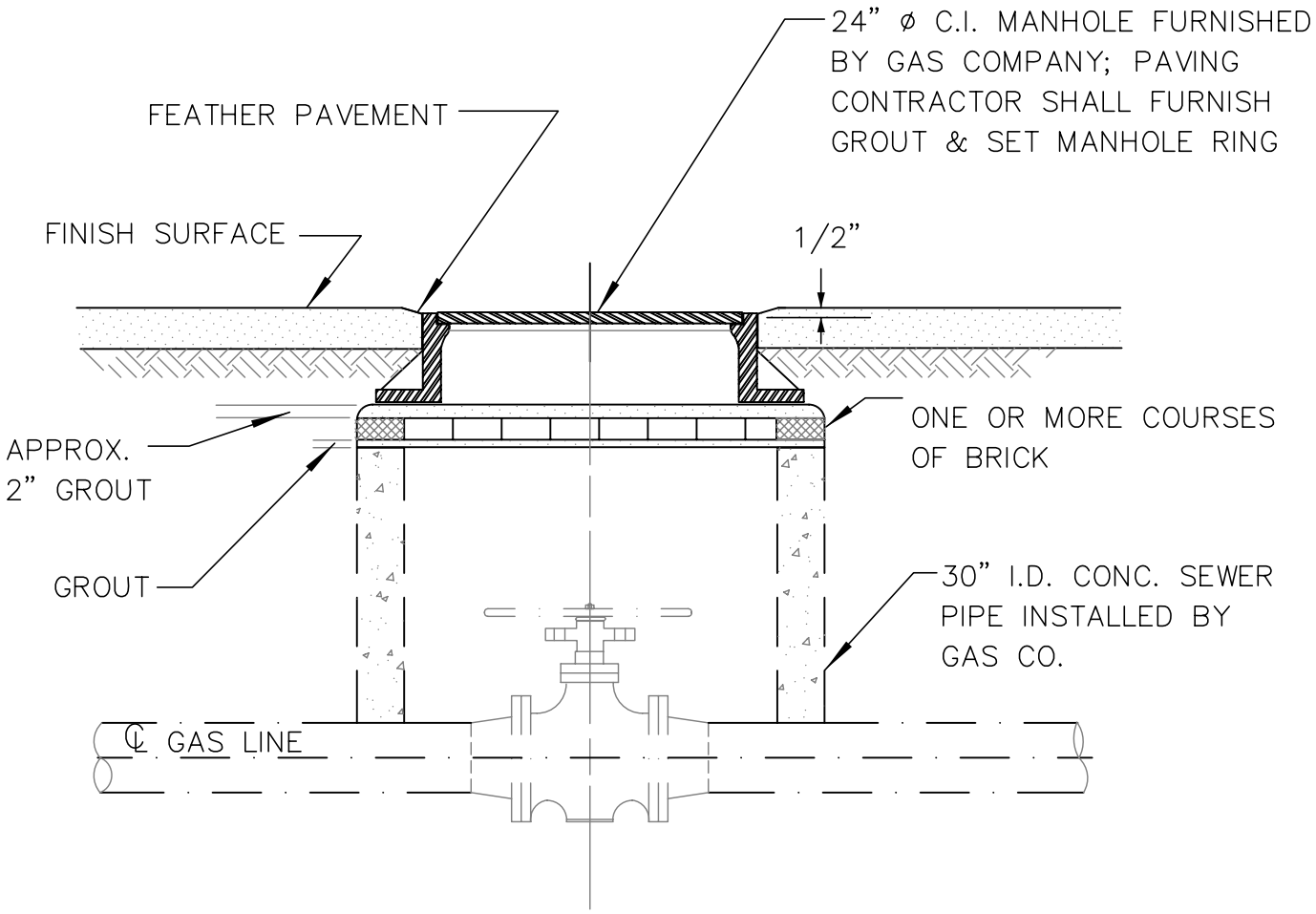

MUNICIPALITY OF ANCHORAGE	SCALE: NTS APPROVED: REVISED: 10/08	**ADJUSTMENT FOR GAS VALVE MANHOLE**	SECTION # 70.03 DETAIL # 70–5

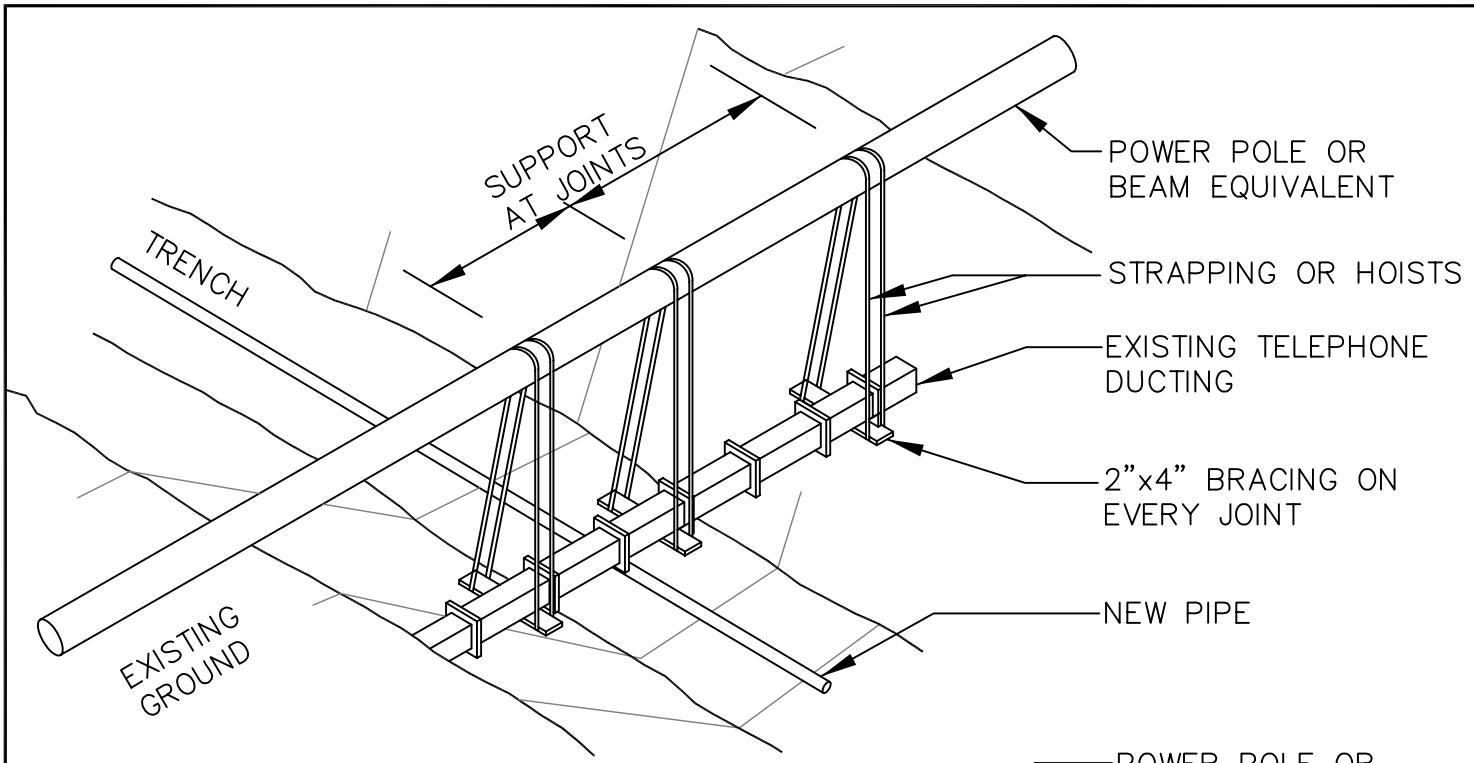

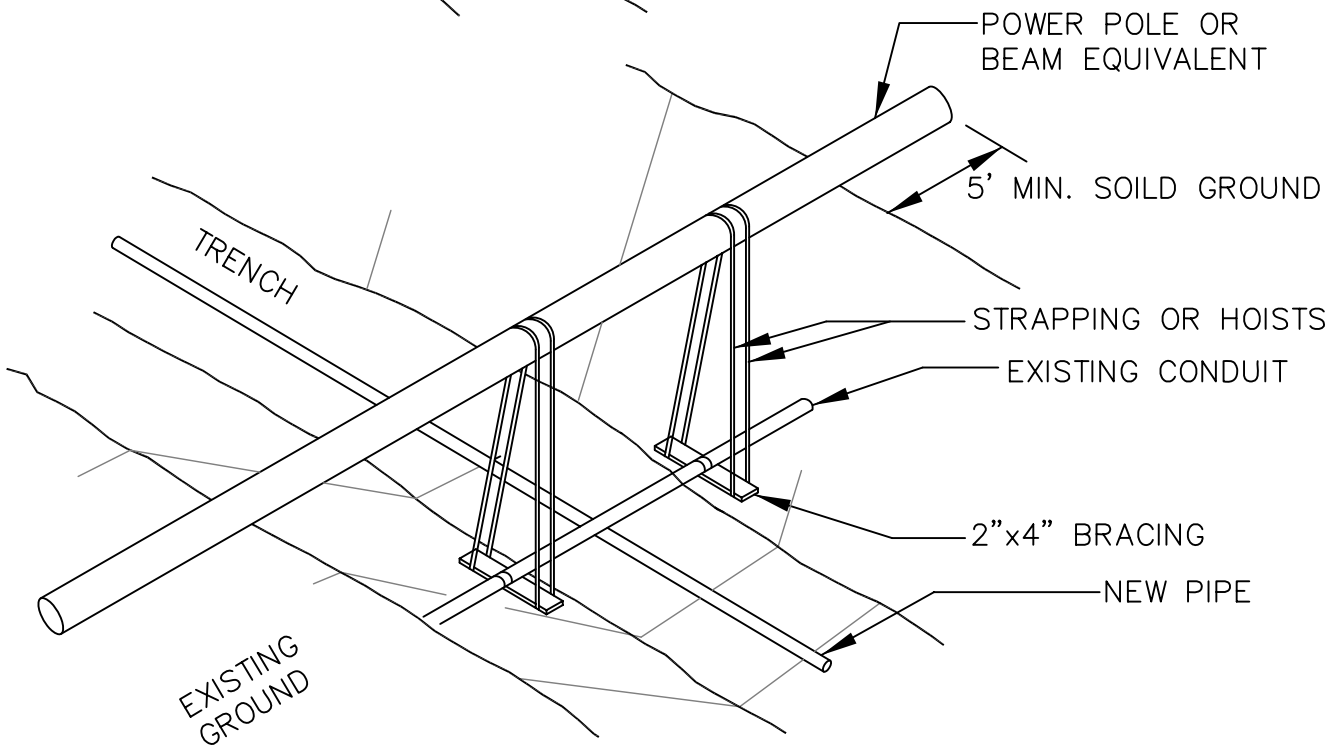

NOTES:

1. SUPPORT DUCTS WITH 2"x4" AND STRAPS AT JOINTS BEFORE EXCAVATING UNDER DUCTS.
2. PLACE AND COMPACT CLASSIFIED MATERIAL UNDER DUCT BANK UP TO WITHIN 18" OF DUCT. THE LAST 18" TO BE CONCRETE OR CONCRETE SLURRY.
3. DUCTS TO BE ENCASED IN 3" OF SAND (ON ALL SIDES).

MUNICIPALITY OF ANCHORAGE	SCALE: NTS APPROVED: REVISED: 10/08	**STANDARD METHOD FOR SHORING (SUPPORTING) PHONE/CONDUIT A.C.S APPROVED METHOD AND PROCEDURES #86-1**	SECTION # 70.04 DETAIL # 70–6

GENERAL NOTES:

1. ALL ONLYS, ARROWS, CROSSWALKS, STOP BARS AND OTHER MARKINGS SHALL BE AS INDICATED IN THE DRAWINGS AND SPECIFICATIONS.
2. DUAL–TURN LANE, TURN POCKET REVERSAL AND CENTERLINE DOUBLE LINES SHALL BE TWO 4" YELLOW LINES SEPARATED BY A 4" SPACE.
3. REGULAR LANE LINES SHALL BE A WHITE 4" WIDE LINE. SKIP LINE SPACING SHALL BE A 10' LINE AND A 30' SPACE.
4. MEDIAN NOSE AND THE TOP AND FACE OF CURB OF ALL MEDIAN ISLAND NOSING SHALL BE YELLOW A MINIMUM OF 5' BACK FROM THE FLOWLINE.
5. "W" IS THE WIDTH OF THE LANE MEASURED FROM CENTER LANE LINE TO CENTER LANE LINE OR FROM CENTER LANE LINE TO EDGE OF PAVEMENT.
6. "L" IS TAPER LENGTH. "L" IS DETERMINED BY TAKING THE SPEED LIMIT (M.P.H.) TIMES THE OFFSET WIDTH IN FEET OR AS INDICATED ON DRAWINGS. MINIMUM "L" IS 100'.
7. "D" IS THE LANE REVERSAL DISTANCE. A RATIO OF 8:1 FOR THE ENTRANCE TAPER IS DESIRABLE WITH A MINIMUM RATIO OF 3:1.
8. "S" IS THE SHY DISTANCE MEASURED FROM THE FACE OF CURB TO THE CENTER OF THE OUTSIDE YELLOW LINE. "S" IS 18" OR AS SHOWN ON THE DRAWINGS.
9. THESE NOTES APPLY TO STANDARD DETAILS 70–8 THROUGH 70–15.

MUNICIPALITY OF ANCHORAGE	SCALE: NTS APPROVED: REVISED: 10/08	**STRIPING NOTES**	SECTION # 70.10 DETAIL # 70–7

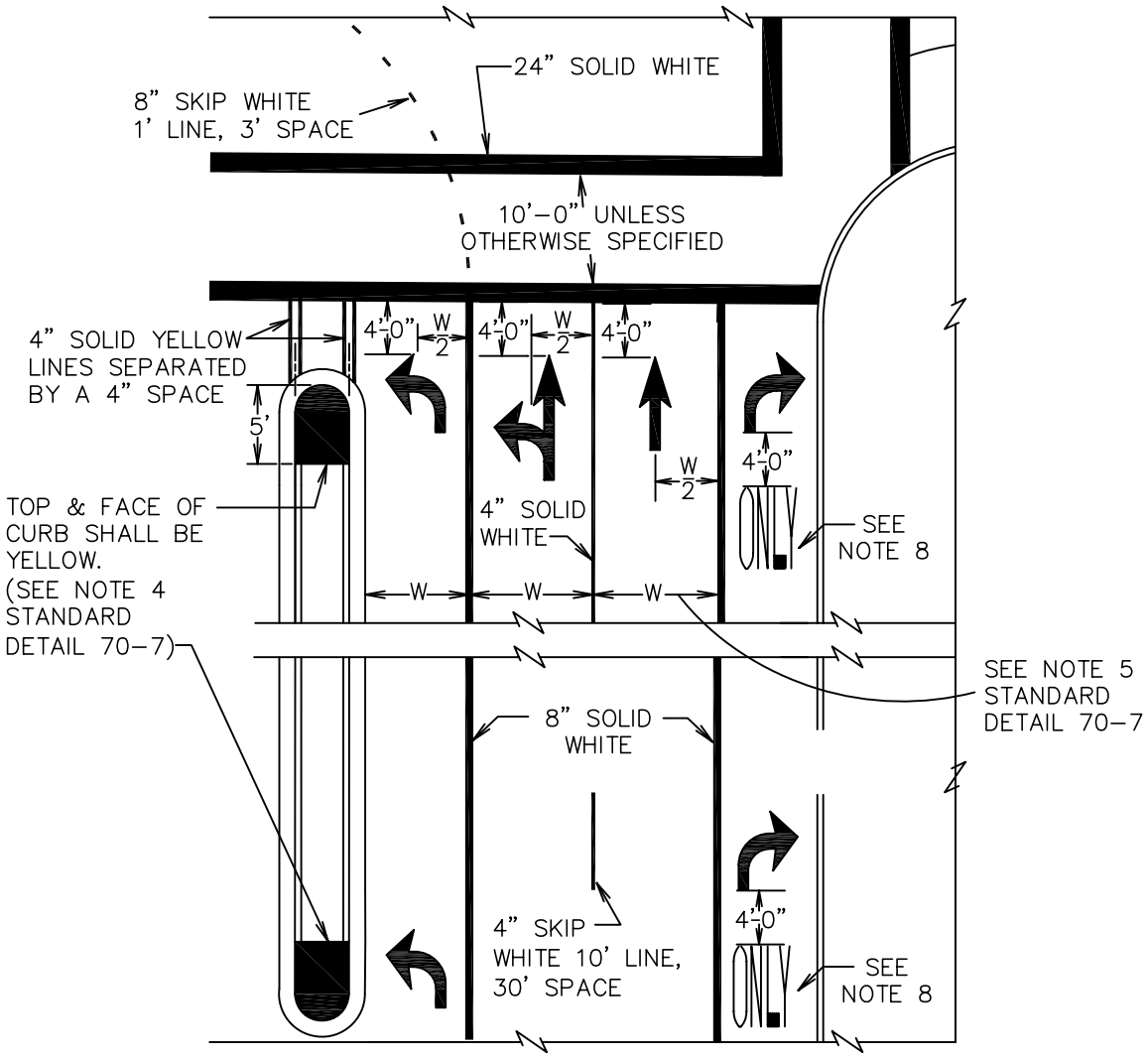

APPROACH TO INTERSECTION

1. ARROW MARKINGS SHALL BE PLACED AT THE START OF AND AT THE INTERSECTION OF AUXILIARY TURN LANES. ADDITIONAL ARROW MARKINGS SHALL BE PLACED AND SPACED PROPORTIONATELY WHEN AUXILIARY TURN LANES EXCEED 150'.
2. REGULAR LANE LINES SHALL BE A SOLID WHITE 4" LINE.
3. LEFT AND RIGHT TURN DELINEATOR LINES SHALL BE A SOLID WHITE 8" LINE.
4. 4" SOLID WHITE LINES APPROACHING INTERSECTIONS ARE 100' IN LENGTH MINIMUM.
5. 4" SOLID WHITE LINES DEPARTING INTERSECTIONS ARE 50' IN LENGTH PLUS THE PARTIAL SKIP CYCLE LENGTH.
6. DOTTED GUIDELINES USED FOR DUAL TURN LANES SHALL BE 8" WHITE SKIP WITH A 1' LINE AND A 3' SPACE.
7. STRAIGHT AHEAD AND COMBINATION ARROWS SHALL BE USED ONLY WHEN INDICATED ON DRAWINGS.
8. "ONLY" WORD MARKINGS ARE USED ONLY WHEN A THROUGH LANE TERMINATES AS A TURN.

MUNICIPALITY OF ANCHORAGE	SCALE: NTS APPROVED: REVISED: 10/08	INTERSECTION APPROACH STRIPING	SECTION # 70.10 DETAIL # 70-8

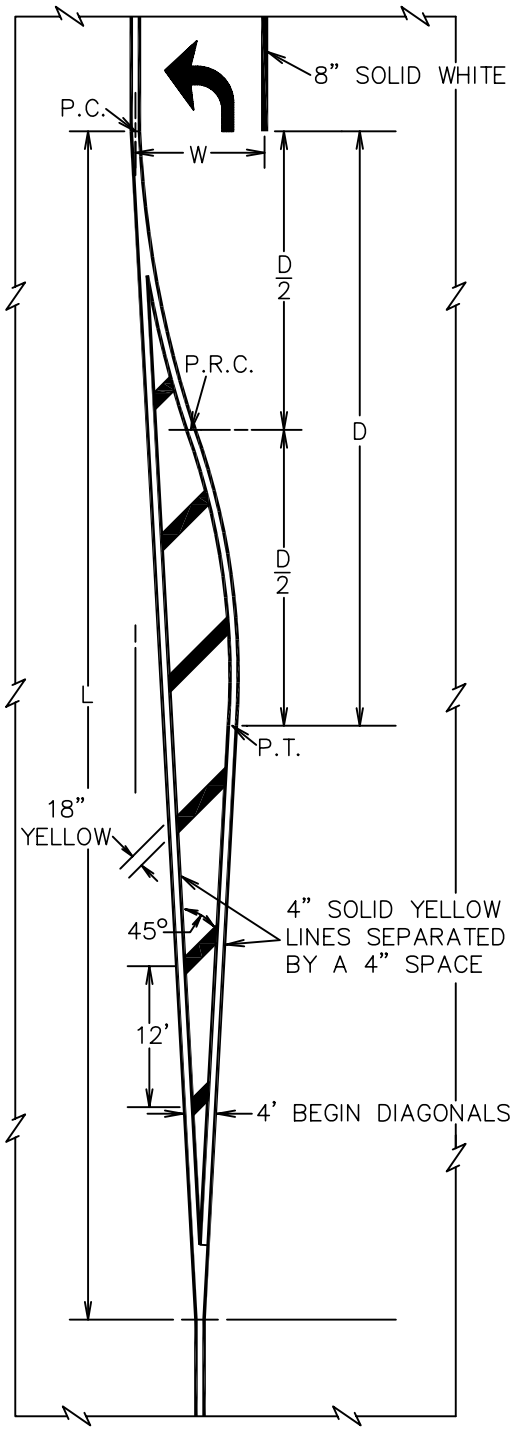

LEFT-TURN POCKET APPROACH

SEE STANDARD DETAIL 70–7 FOR GENERAL STRIPING NOTES

MUNICIPALITY OF ANCHORAGE	SCALE: NTS APPROVED: REVISED: 10/08	LEFT-TURN POCKET APPROACH STRIPING	SECTION # 70.11 DETAIL # 70–9

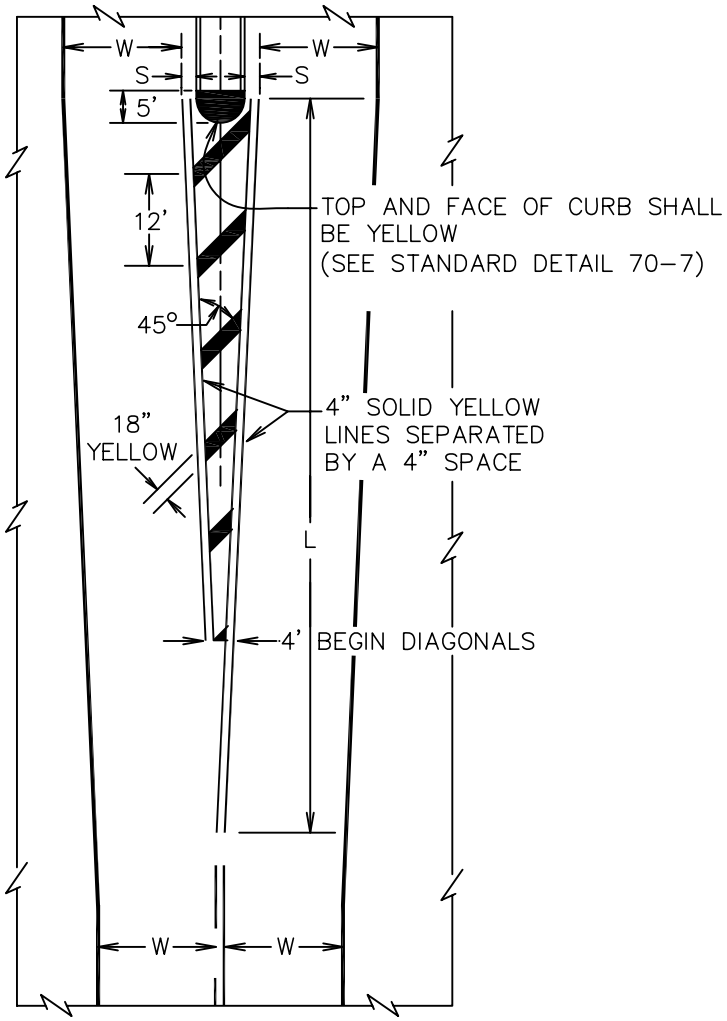

RAISED MEDIAN APPROACH

SEE STANDARD DETAIL 70-7 FOR GENERAL STRIPING NOTES

MUNICIPALITY OF ANCHORAGE	SCALE: NTS APPROVED: REVISED: 10/08	**RAISED MEDIAN APPROACH AND TWO LANES DRIVE TO RIGHT STRIPING**	SECTION # 70.10 DETAIL # 70-10

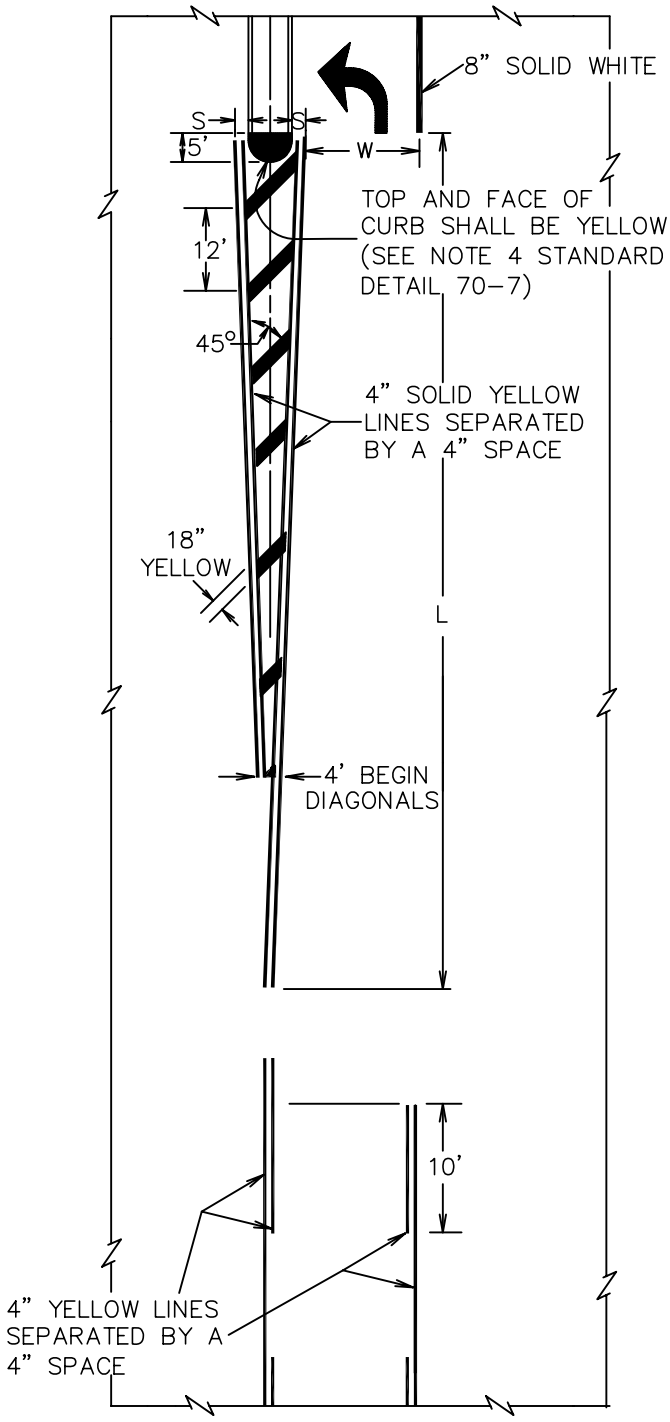

LEFT-TURN POCKET APPROACH FROM TWO WAY CENER LEFT-TURN LANE

SEE STANDARD DETAIL 70-7 FOR GENERAL STRIPING NOTES

MUNICIPALITY OF ANCHORAGE	SCALE: NTS APPROVED: REVISED: 10/08	LEFT-TURN POCKET APPROACH FROM TWO WAY CENTER LEFT-TURN LANE STRIPING	SECTION # 70.10 DETAIL # 70-11

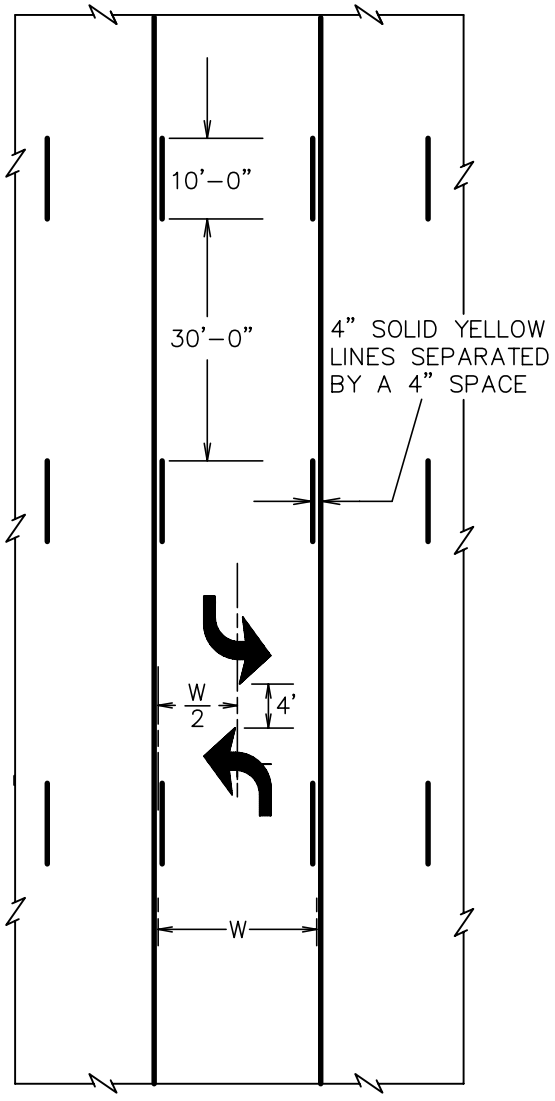

TWO WAY CENTER LEFT TURN LANE

1. INSTALL DUAL TURN LANE ARROWS EVERY 200', UNLESS OTHERWISE SPECIFIED.

MUNICIPALITY OF ANCHORAGE	SCALE: NTS APPROVED: REVISED: 10/08	**TWO WAY CENTER LEFT TURN LANE STRIPING**	SECTION # 70.10 DETAIL # 70–12

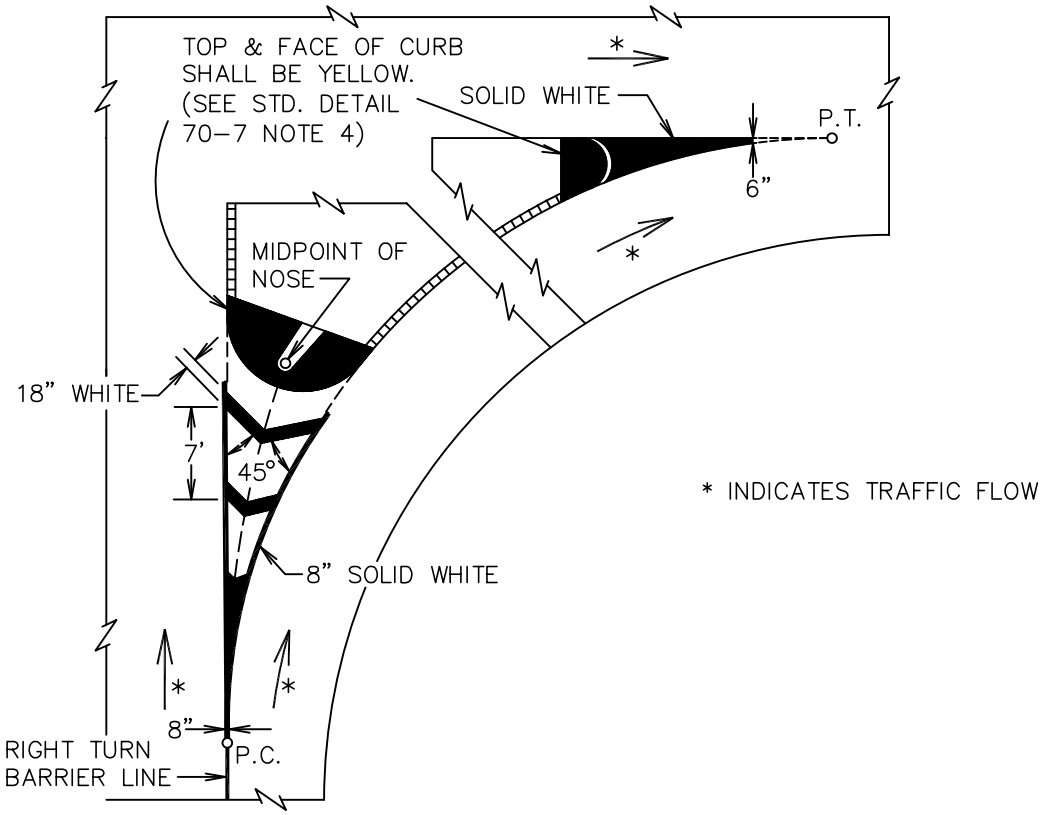

PASSING ON BOTH SIDES OF AN OBSTRUCTION

MUNICIPALITY OF ANCHORAGE	SCALE: NTS APPROVED: REVISED: 10/08	PASSING ON BOTH SIDES OF AN OBSTRUCTION	SECTION # 70.10 DETAIL # 70-13

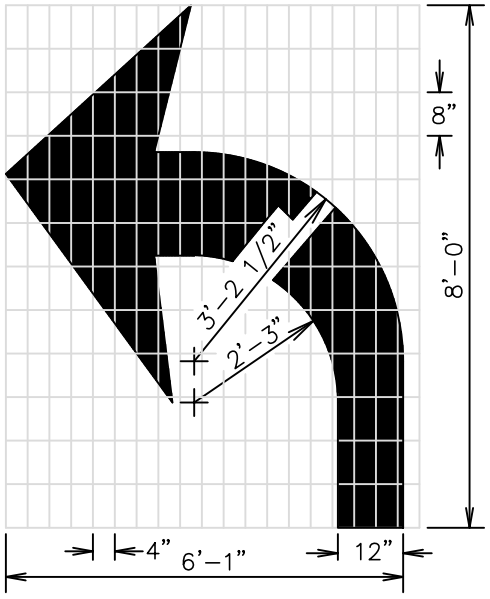

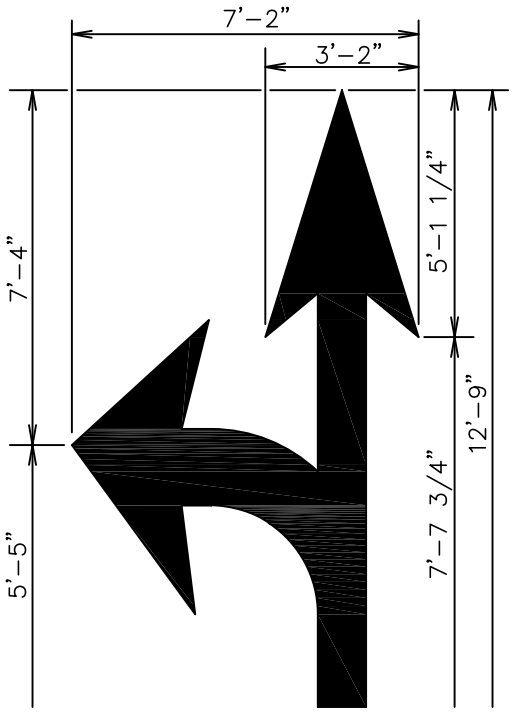

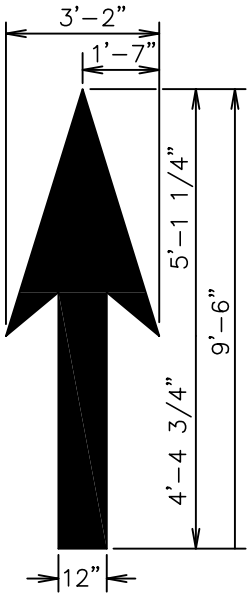

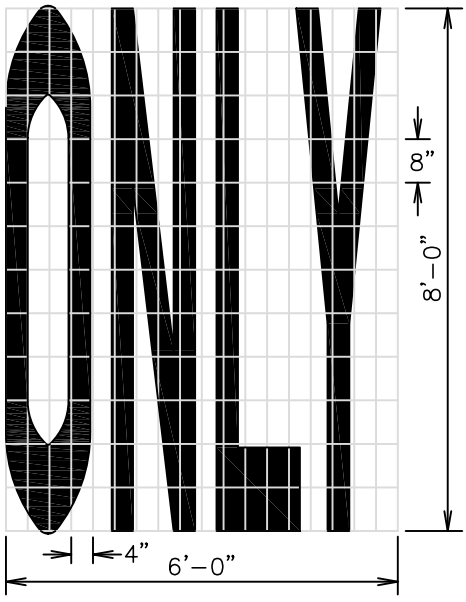

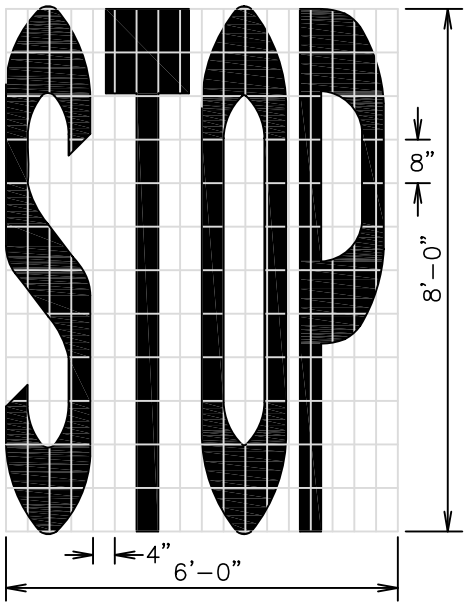

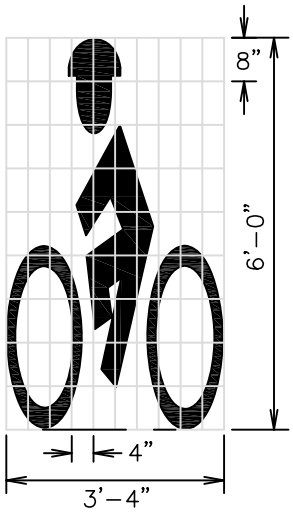

LAYOUT TEMPLATES FOR STENCILS

1. ALL SYMBOLS SHOWN SHALL BE WHITE AND REFLECTORIZED.
2. RIGHT AND LEFT TURN AUXILIARY LANE MARKINGS ARE IDENTICAL BUT REVERSED.

REVISION: 2/10 ADDED BIKE LANE PAVEMENT MARKING

MUNICIPALITY OF ANCHORAGE	SCALE: NTS APPROVED: REVISED: 2/10	LAYOUT TEMPLATES FOR STENCILS	SECTION # 70.10 DETAIL # 70–14

MUNICIPALITY OF ANCHORAGE

SCALE: NTS

APPROVED:

REVISED: 10/08

APPROACH TO RAILROAD CROSSING ON 2 LANE 2 WAY HIGHWAY

SECTION # 70.10

DETAIL # 70–15

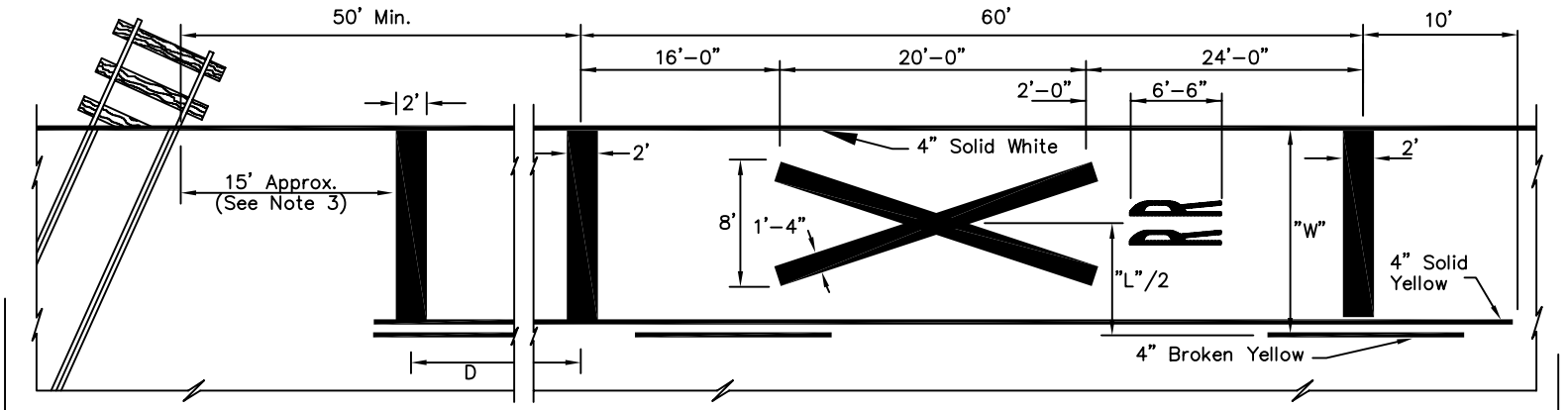

APPROACH TO RAILROAD CROSSING ON 2 LANE 2 WAY HIGHWAY

NOTES:

1. ALL MARKINGS SOLID WHITE UNLESS INDICATED OTHERWISE.

2. ON 4–LANE ROADWAYS THE RAILROAD CROSSING APPROACH MARKING SHALL BE PLACED IN EACH LANE OF THE APPROACH.

3. LOCATE STOP BAR 15' FROM RAILROAD TRACK OR 8' FROM GATE, IF PRESENT.

4. EDGE LINES AND LANE LINES ON A UNI–DIRECTIONAL APPROACH SHALL BE PLACED IN A NORMAL MANNER EXCEPT THAT THE LANE LINE(S) SHALL BE SOLID 4" WHITE IN LIEU OF BROKEN FOR A DISTANCE = (D+60') IN ADVANCE OF THE STOP BANDS.

POSTED LIMIT	D
30 M.P.H.	225'
40	350'
50	475'
60	625'

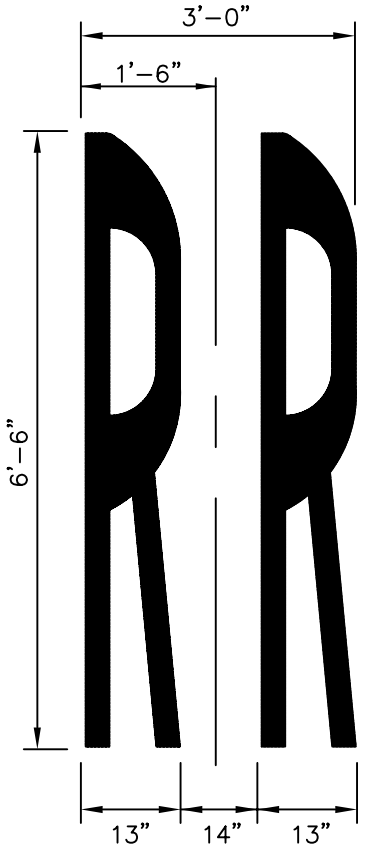

RAILROAD SYMBOL

MUNICIPALITY OF ANCHORAGE

SCALE: NTS

APPROVED:

REVISED: 10/08

TYPICAL UNCURBED RETURN WITH PATHWAY

SECTION # 70.10

DETAIL # 70–16

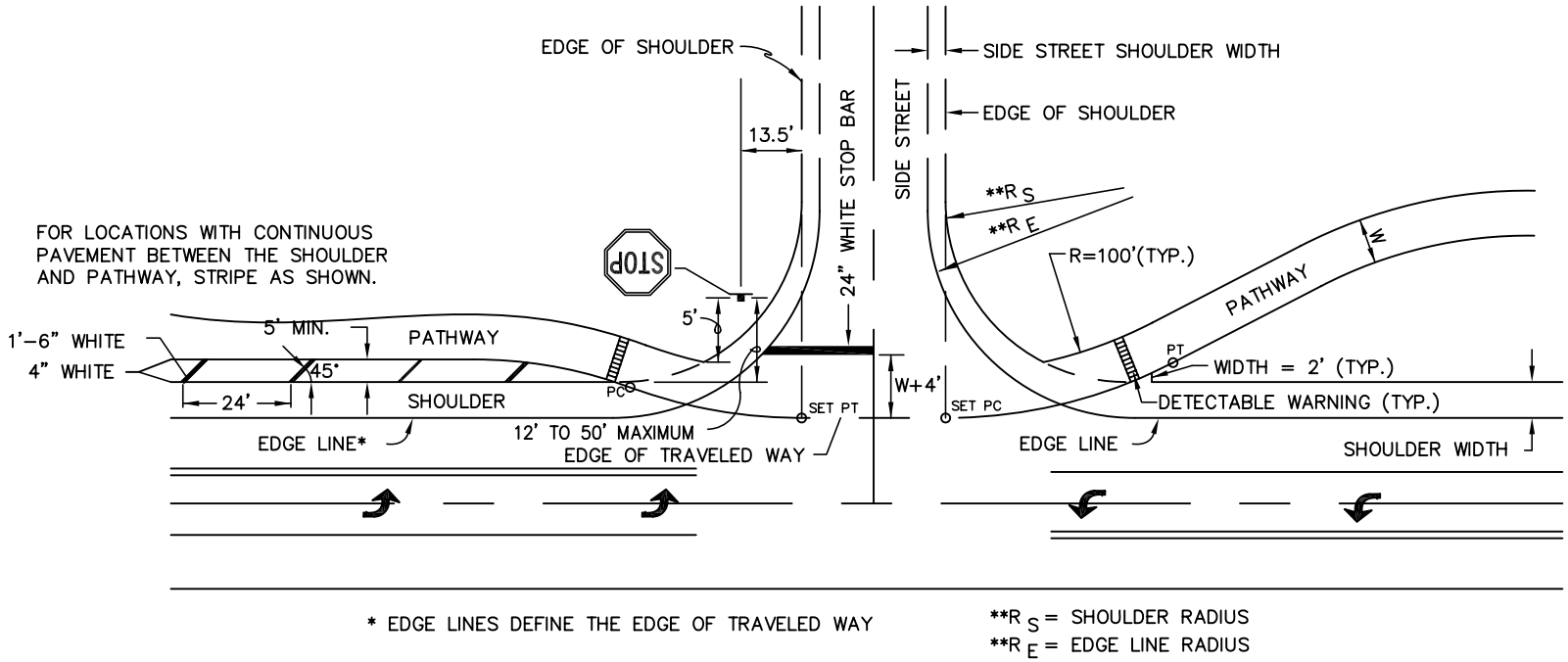

TYPICAL UNCURBED RETURN WITH PATHWAY

1. WHEN THE SIDE STREET LACKS EDGE LINES, BEGIN AND END THE MAIN STREET EDGE LINES AT THE MAIN STREET PAVEMENT RETURNS AND EXTEND THE STOP BAR TO THE EDGE OF PAVEMENT AS SHOWN IN THE *UNCURBED RETURN WITHOUT PATHWAY* DETAIL.
2. INSTALL DETECTABLE WARNING TILES IN PATHWAYS AT THE LOCATIONS SHOWN. INSTALL ACCORDING TO THE MANUFACTURER'S WRITTEN INSTALLATION INSTRUCTIONS.
3. BREAK THE MAIN STREET CENTERLINE MARKINGS AT SIDE STREET INTERSECTIONS ONLY WHEN LEFT TURN LANES ARE PROVIDED. OTHERWISE, INSTALL THEM CONTINUOUSLY THROUGH THE INTERSECTION.
4. LOCATE STOP SIGNS SO THEY ARE:
   A. VISIBLE TO APPROACHING TRAFFIC AND
   B. AS NEAR TO THE STOP BAR AS PRACTICABLE.
5. WHEN THE SIDE STREET LACKS THE RIGHT OF WAY TO INSTALL THE STOP SIGN AT THE 13.5' OFFSET, REDUCE THE OFFSET TO FIT THE SIGN WITHIN THE RIGHT OF WAY. IF SIGHT OBSTRUCTIONS OBSCURE THE SIGN, RELOCATE THE SIGN SO IT IS VISIBLE.

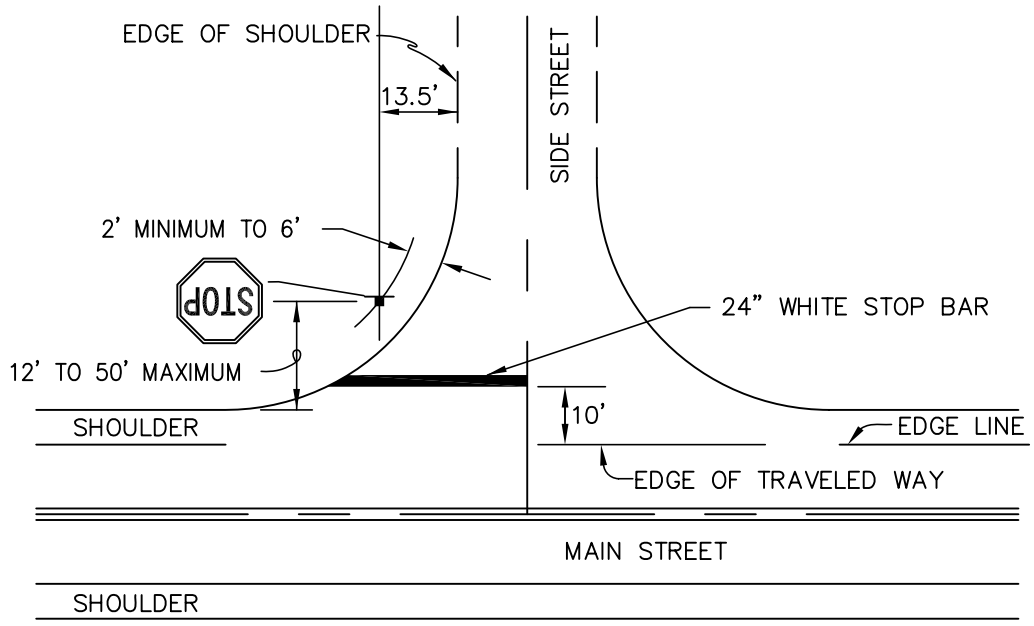

TYPICAL UNCURBED RETURN WITHOUT PATHWAY

NOTES:

1. BREAK THE MAIN STREET CENTERLINE MARKINGS AT SIDE STREET INTERSECTIONS ONLY WHEN LEFT TURN LANES ARE PROVIDED. OTHERWISE, INSTALL THEM CONTINUOUSLY THROUGH THE INTERSECTION.
2. LOCATE STOP SIGNS SO THEY ARE:
   A. VISIBLE TO APPROACHING TRAFFIC AND
   B. AS NEAR TO THE STOP BAR AS PRACTICABLE.
3. WHEN THE SIDE STREET LACKS THE RIGHT OF WAY TO INSTALL THE STOP SIGN AT THE 13.5' OFFSET, REDUCE THE OFFSET TO FIT THE SIGN WITHIN THE RIGHT OF WAY. IF SIGHT OBSTRUCTIONS OBSCURE THE SIGN, RELOCATE THE SIGN SO IT IS VISIBLE.

MUNICIPALITY OF ANCHORAGE	SCALE: NTS APPROVED: REVISED: 10/08	TYPICAL UNCURBED RETURN WITHOUT PATHWAY	SECTION # 70.10 DETAIL # 70–17

MUNICIPALITY OF ANCHORAGE

SCALE: NTS

APPROVED:

REVISED: 10/08

TYPICAL CURB RETURN WITH SIDEWALK

SECTION # 70.10

DETAIL # 70–18

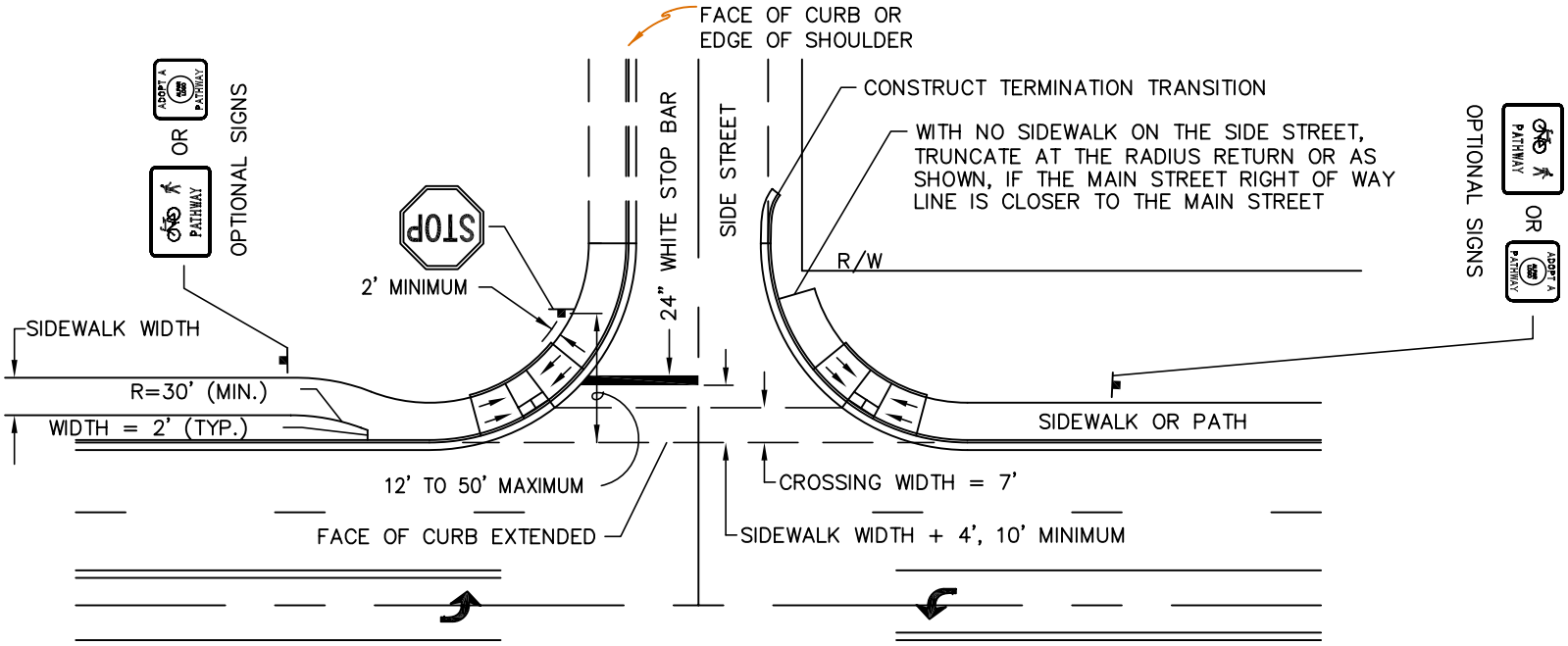

TYPICAL CURBED RETURN WITH SIDEWALK

NOTES:

1. WHEN SIDEWALKS ARE SEPARATED FROM THE BACK OF CURB, JOIN THE TWO AS SHOWN USING A REVERSE CURVE WITH A MINIMUM RADIUS OF 30'.
2. BREAK THE MAIN STREET CENTERLINE MARKINGS AT SIDE STREET INTERSECTIONS ONLY WHEN LEFT TURN LANES ARE PROVIDED. OTHERWISE, INSTALL THEM CONTINUOUSLY THROUGH THE INTERSECTION.
3. LOCATE STOP SIGNS SO THEY ARE
   - A. VISIBLE TO APPROACHING TRAFFIC AND
   - B. AS NEAR TO THE STOP BAR AS PRACTICABLE.

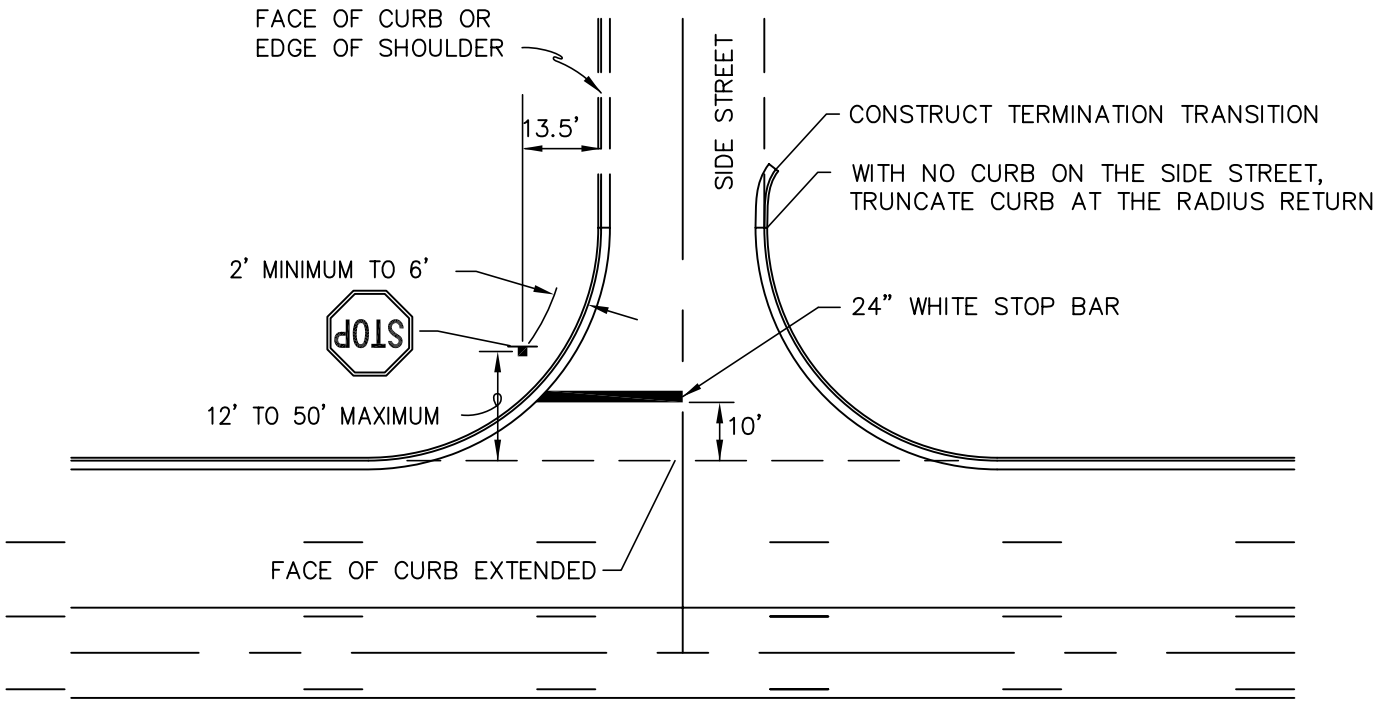

TYPICAL CURBED RETURN WITHOUT SIDEWALK

NOTES:

1. BREAK THE MAIN STREET CENTERLINE MARKINGS AT SIDE STREET INTERSECTIONS ONLY WHEN LEFT TURN LANES ARE PROVIDED. OTHERWISE, INSTALL THEM CONTINUOUSLY THROUGH THE INTERSECTION.
2. LOCATE STOP SIGNS SO THEY ARE:
   A. VISIBLE TO APPROACHING TRAFFIC
   B. AS NEAR TO THE STOP BAR AS PRACTICABLE.
3. WHEN THE SIDE STREET LACKS THE RIGHT OF WAY TO INSTALL THE STOP SIGN AT THE 13.5' OFFSET, REDUCE THE OFFSET TO FIT THE SIGN WITHIN THE RIGHT OF WAY. IF SIGHT OBSTRUCTIONS OBSCURE THE STOP SIGN, RELOCATE THE SIGN SO IT IS VISIBLE.

MUNICIPALITY OF ANCHORAGE	SCALE: NTS APPROVED: REVISED: 10/08	**TYPICAL CURB RETURN WITHOUT SIDEWALK**	SECTION # 70.10 DETAIL # 70–19

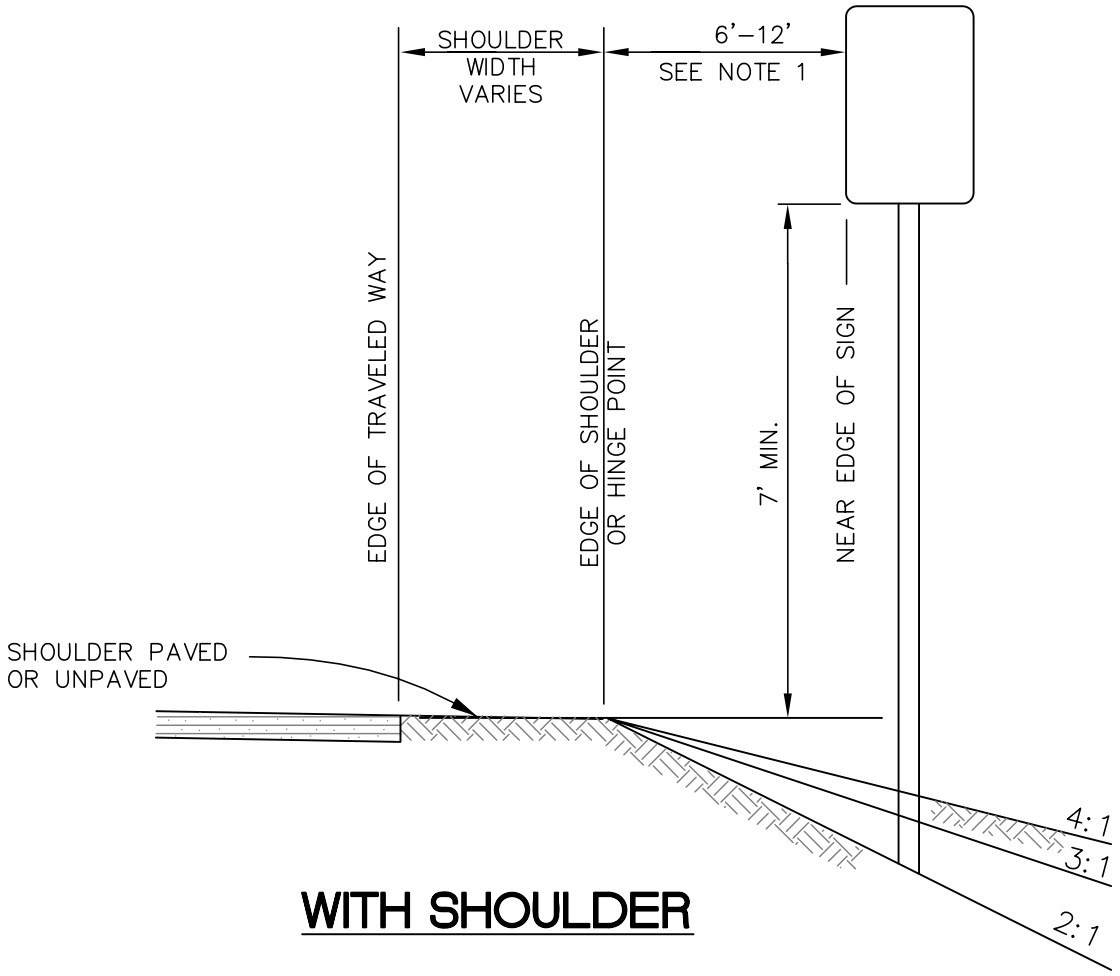

WITH SHOULDER

NOTES:

1. UNLESS SHOWN OTHERWISE ON THE DRAWINGS, THE STANDARD SIGN OFFSET IS 12'. THE MINIMUM IS 6'.
2. IF SIGNS EXTEND OVER SIDEWALKS, THE MINIMUM VERTICAL CLEARANCE IS 7'–0".
3. ADD 6" TO MOUNTING HEIGHT ON UNPAVED ROADS.
4. IF SIGNS EXTEND OVER BIKE PATHS, THE MINIMUM VERTICAL CLEARANCE IS 8'–0".
5. PAINT ALL SIGN MOUNTING FASTENERS ON SIGN FACE A COLOR MATCHING THE SIGN FACE.
6. ATTACH ALL SIGNS ZEES AND BRACES MOUNTED TO THE POSTS WITH 5/16" BOLTS WITH SELF–LOCKING NUTS.

MUNICIPALITY OF ANCHORAGE	SCALE: NTS APPROVED: REVISED: 10/08	POST MOUNTED SIGN WITH SHOULDER	SECTION # 70.11 DETAIL # 70–20

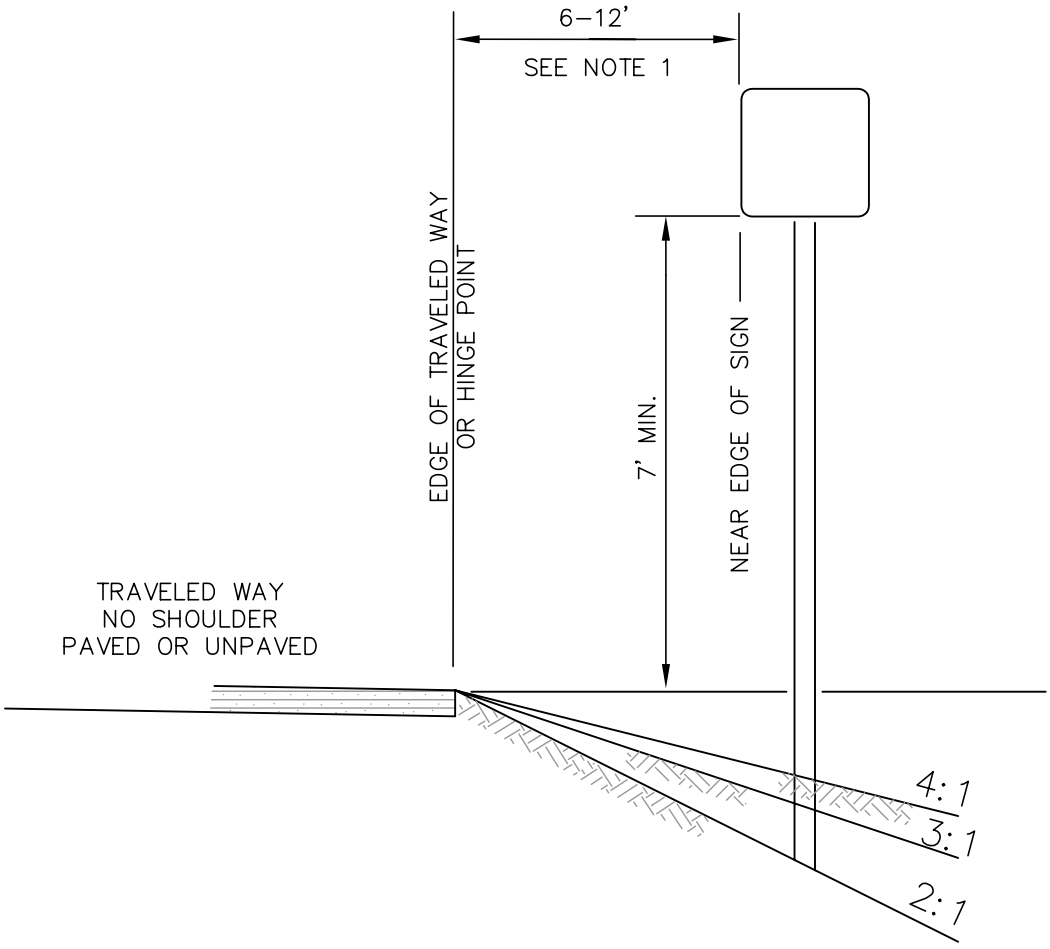

NO SHOULDER

NOTES:

1. UNLESS SHOWN OTHERWISE ON THE DRAWINGS, THE STANDARD SIGN OFFSET IS 12'. THE MINIMUM IS 6'.
2. IF SIGNS EXTEND OVER SIDEWALKS, THE MINIMUM VERTICAL CLEARANCE IS 7'–0".
3. ADD 6" TO MOUNTING HEIGHT ON UNPAVED ROADS.
4. IF SIGNS EXTEND OVER BIKE PATHS, THE MINIMUM VERTICAL CLEARANCE IS 8'–0".
5. PAINT ALL SIGN MOUNTING FASTENERS ON SIGN FACE A COLOR MATCHING THE SIGN FACE.
6. ATTACH ALL SIGNS ZEES AND BRACES MOUNTED TO THE POSTS WITH 5/16" BOLTS WITH SELF–LOCKING NUTS.

MUNICIPALITY OF ANCHORAGE	SCALE: NTS APPROVED: REVISED: 2/10	**POST MOUNTED SIGN WITH NO SHOULDER**	SECTION # 70.11 DETAIL # 70–21

REVISION: 2/10 FIXED TYPO FOR SETBACK DISTANCE

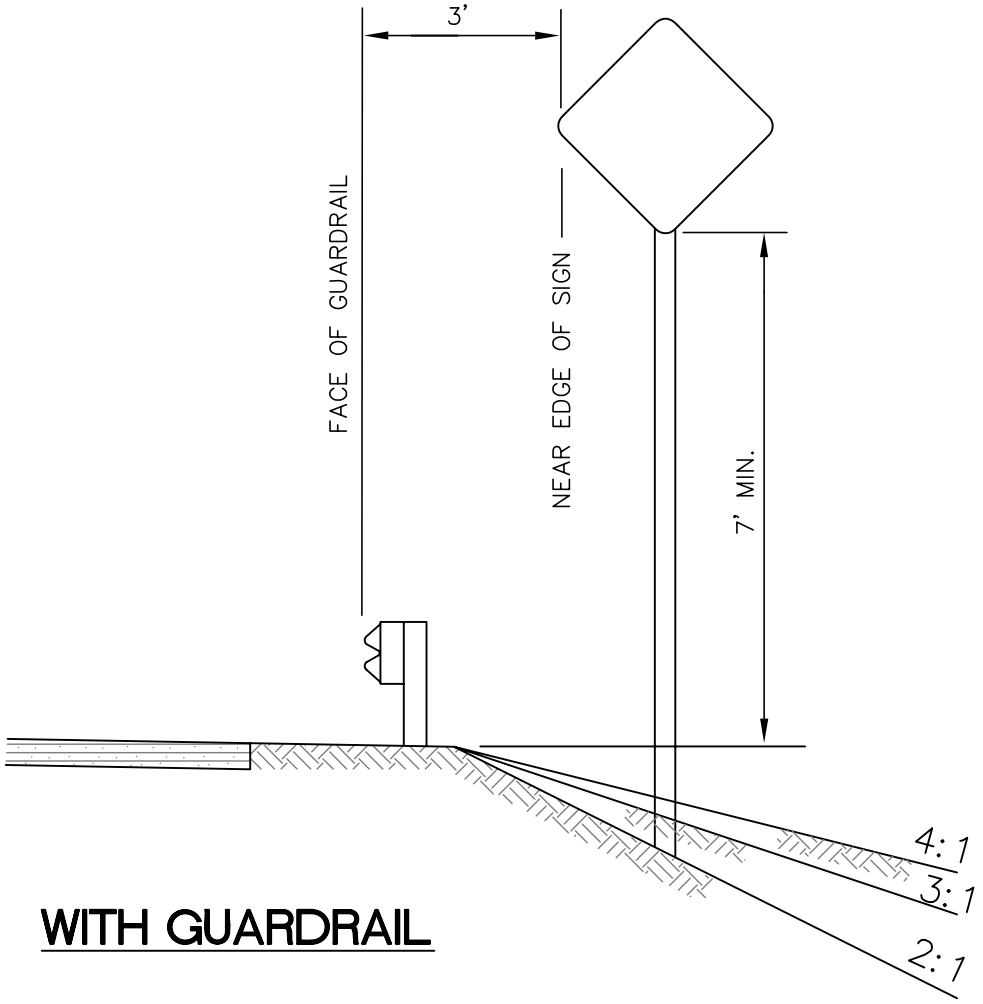

WITH GUARDRAIL

NOTES:

1. IF SIGNS EXTEND OVER SIDEWALKS, THE MINIMUM VERTICAL CLEARANCE IS 7'–0".
2. ADD 6" TO MOUNTING HEIGHT ON UNPAVED ROADS.
3. IF SIGNS EXTEND OVER BIKE PATHS, THE MINIMUM VERTICAL CLEARANCE IS 8'–0".
4. PAINT ALL SIGN MOUNTING FASTENERS ON SIGN FACE A COLOR MATCHING THE SIGN FACE.
5. ATTACH ALL SIGNS ZEES AND BRACES MOUNTED TO THE POSTS WITH 5/16" BOLTS WITH SELF–LOCKING NUTS.

MUNICIPALITY OF ANCHORAGE	SCALE: NTS APPROVED: REVISED: 10/08	POST MOUNTED SIGN WITH GUARDRAIL	SECTION # 70.11 DETAIL # 70–22

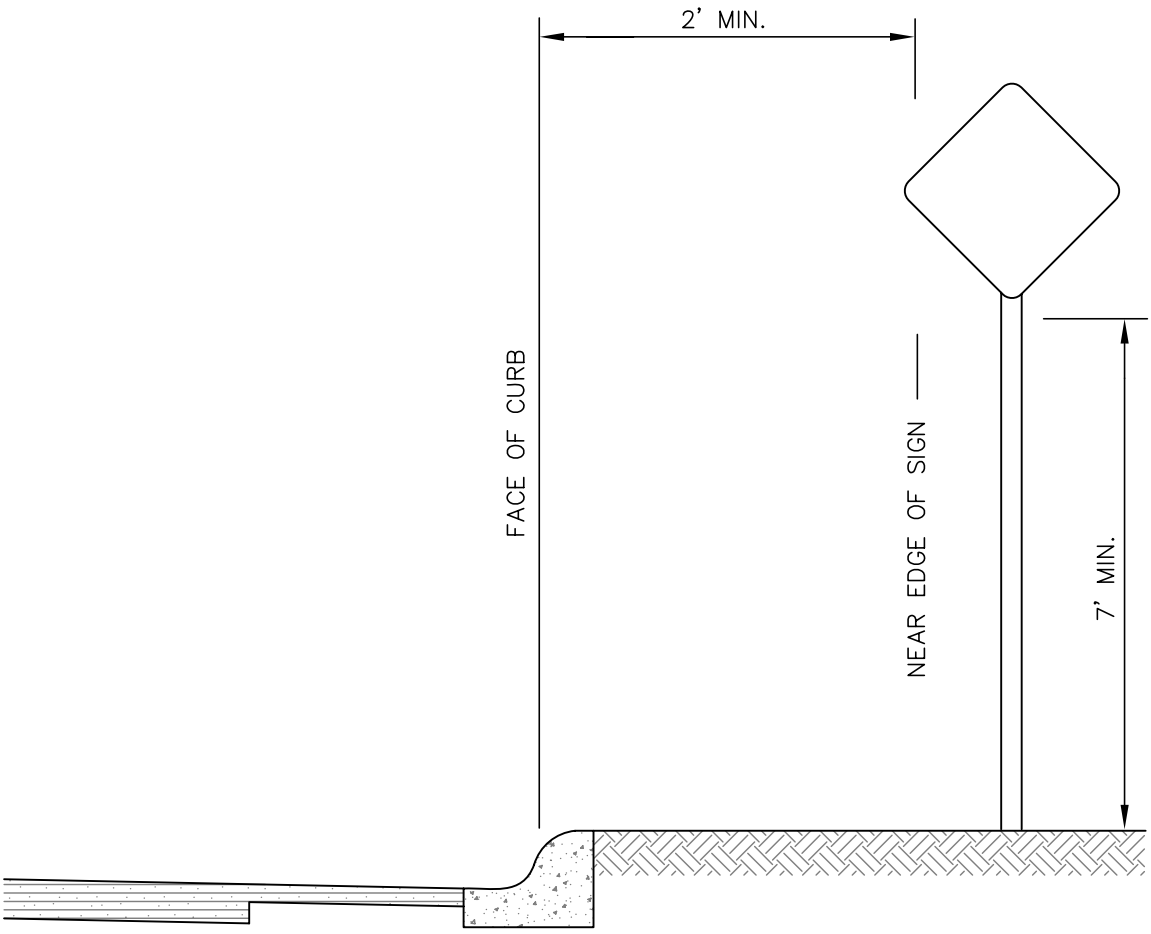

CURB WITHOUT SIDEWALK

NOTES:

1. PAINT ALL SIGN MOUNTING FASTENERS ON SIGN FACE A COLOR MATCHING THE SIGN FACE.
2. ATTACH ALL SIGNS ZEES AND BRACES MOUNTED TO THE POSTS WITH 5/16" BOLTS WITH SELF-LOCKING NUTS.

MUNICIPALITY OF ANCHORAGE	SCALE: NTS APPROVED: REVISED: 10/08	**POST MOUNTED SIGN CURB WITHOUT SIDEWALK**	SECTION # 70.11 DETAIL # 70-23

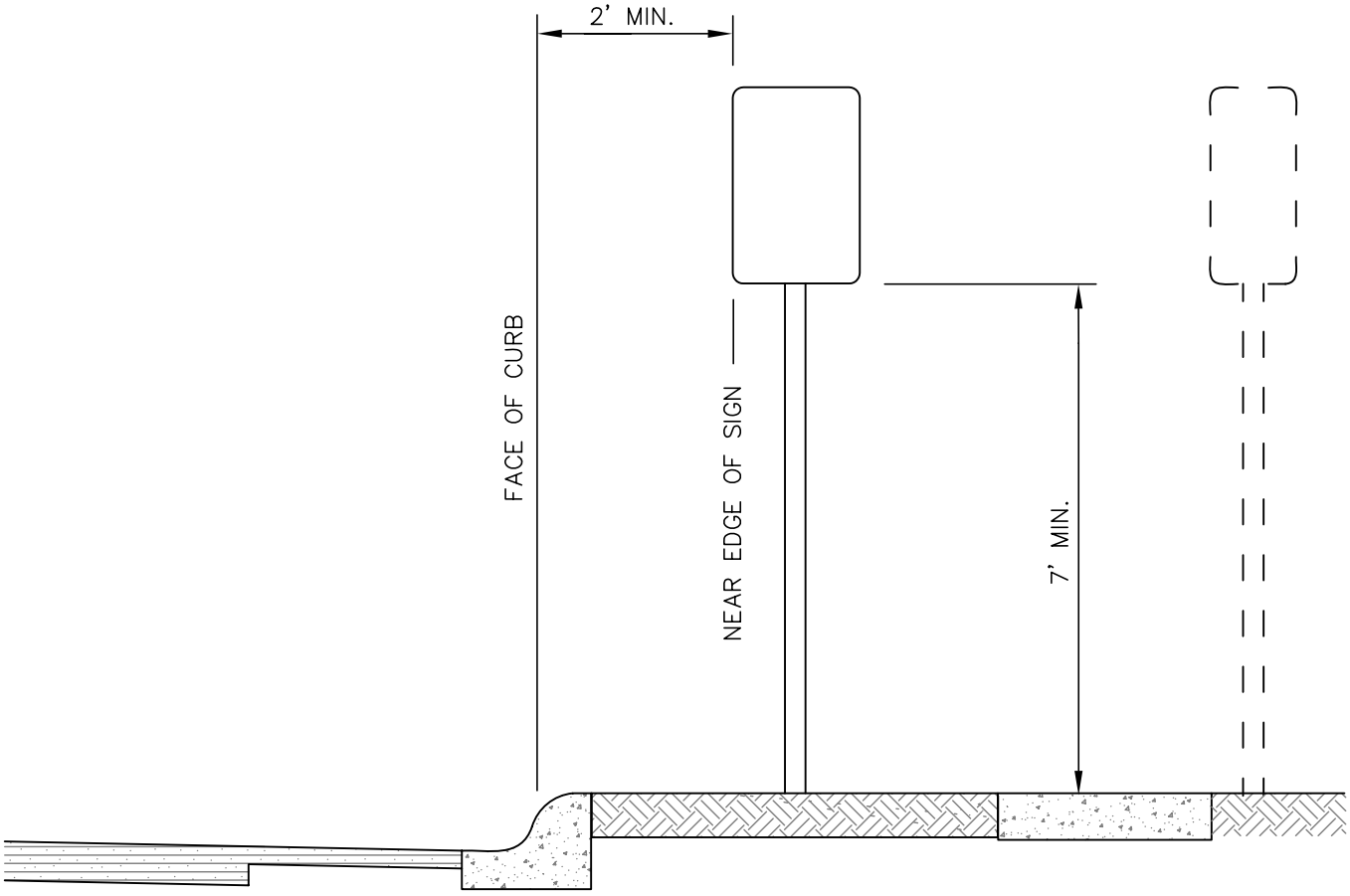

CURB WITH PARKWAY AND SIDEWALK

NOTES:

1. IF PARKWAY IS LESS THAN 5', SIGNS SHOULD BE PLACED BEHIND SIDEWALK.
2. IF SIGNS EXTEND OVER SIDEWALKS, THE MINIMUM VERTICAL CLEARANCE IS 7'–0".
3. IF SIGNS EXTEND OVER BIKE PATHS, THE MINIMUM VERTICAL CLEARANCE IS 8'–0".
4. PAINT ALL SIGN MOUNTING FASTENERS ON SIGN FACE A COLOR MATCHING THE SIGN FACE.
5. ATTACH ALL SIGNS ZEES AND BRACES MOUNTED TO THE POSTS WITH 5/16" BOLTS WITH SELF–LOCKING NUTS.

MUNICIPALITY OF ANCHORAGE	SCALE: NTS APPROVED: REVISED: 10/08	**POST MOUNTED SIGN CURB WITH PARKWAY AND SIDEWALK**	SECTION # 70.11 DETAIL # 70–24

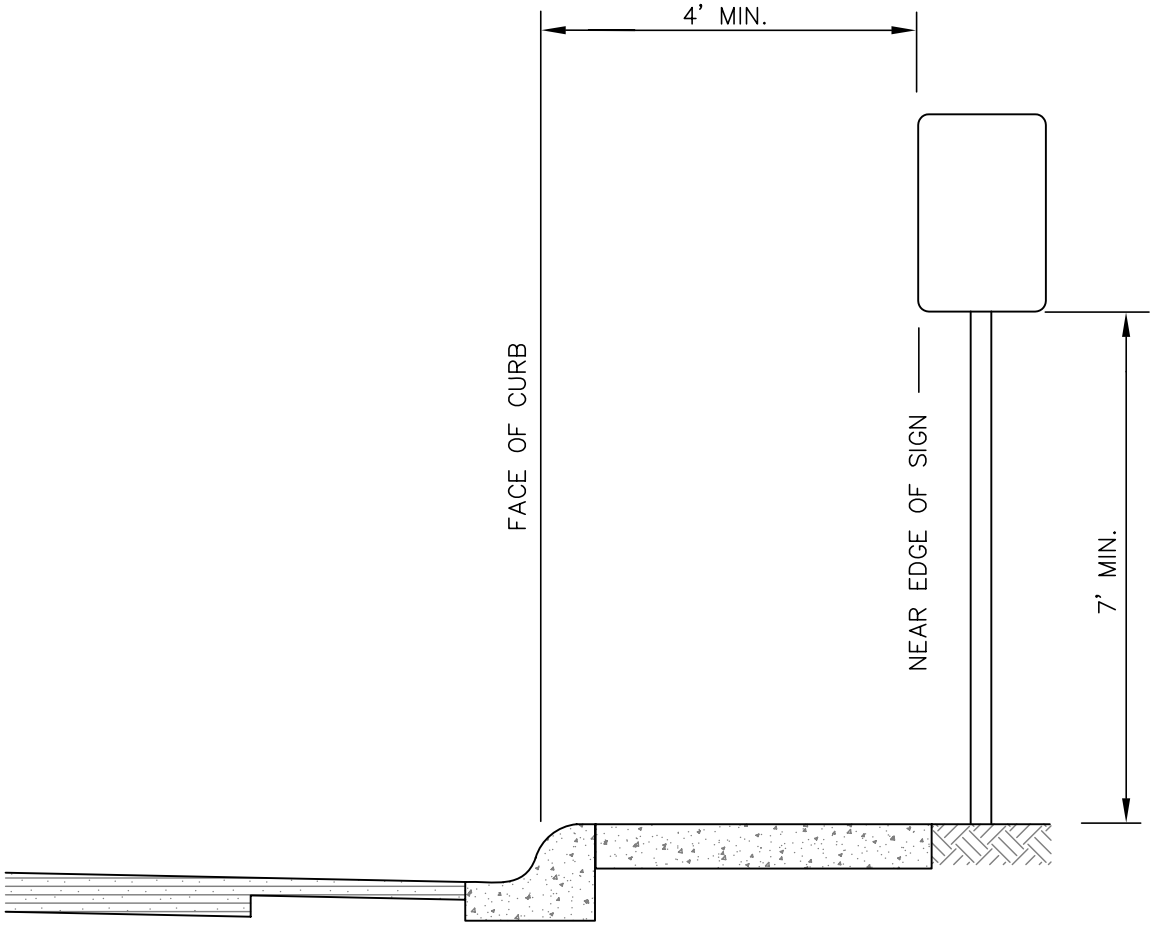

CURB WITH ATTACHED SIDEWALK

NOTE:

1. SIGN FACE SHALL BE PLACED OUTSIDE SIDEWALK EXCEPT WHEN ROW LIMITATIONS EXIST; FOR EXAMPLE IN THE CENTRAL BUSINESS DISTRICT OR OTHER SIMILAR DISTRICTS.

MUNICIPALITY OF ANCHORAGE	SCALE: NTS APPROVED: REVISED: 10/08	**POST MOUNTED SIGN CURB WITH SIDEWALK WITHOUT PARKWAY**	SECTION # 70.11 DETAIL # 70–25

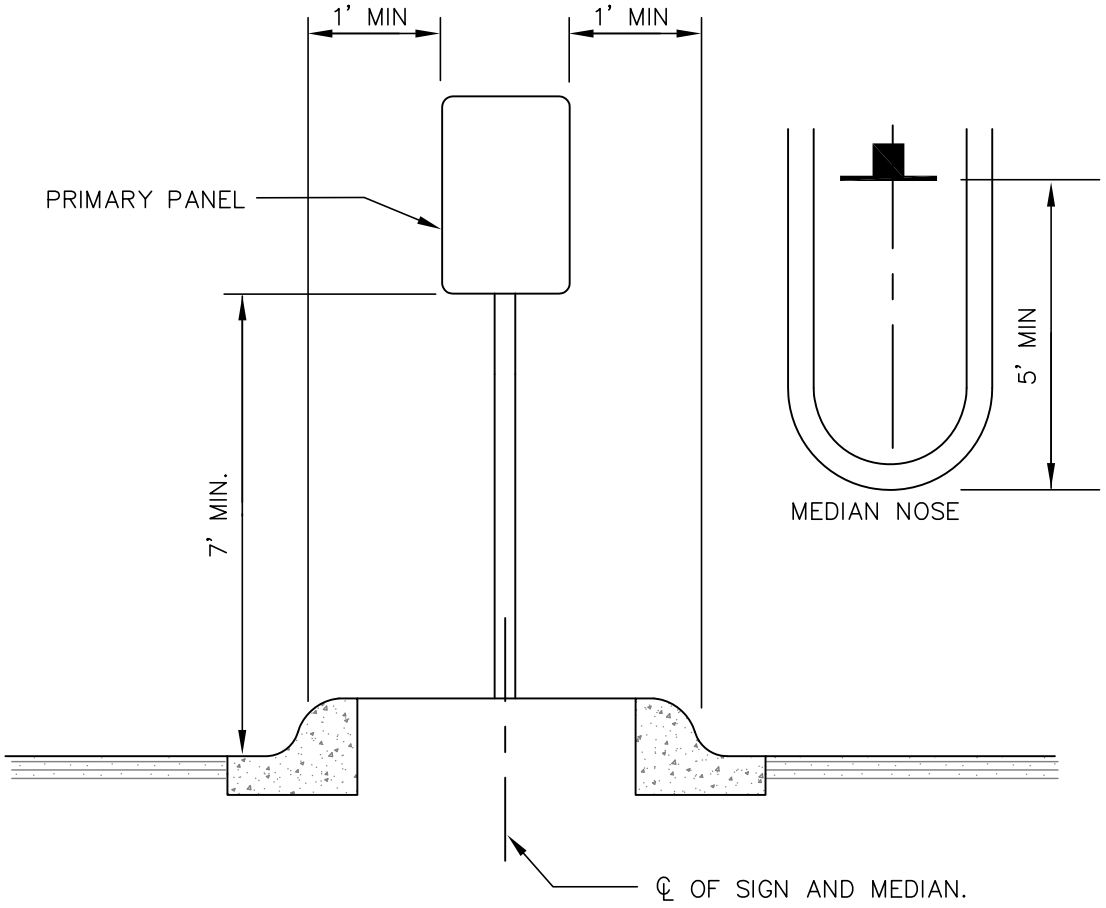

RAISED MEDIAN

NOTE:

IF AN OBJECT MARKER IS REQUIRED BY THE TRAFFIC ENGINEER, THE SIGN SHALL HAVE A MINIMUM FOUR FOOT (4') CLEARANCE FROM THE TOP OF MEDIAN TO THE BOTTOM OF SIGN.

MUNICIPALITY OF ANCHORAGE	SCALE: NTS APPROVED: REVISED: 3/13	**POST MOUNTED SIGN RAISED MEDIANS**	SECTION # 70.11 DETAIL # 70–26

REVISION: 3/13 DELETED OBJECT MARKER GRAPHIC AND ADDED NOTE

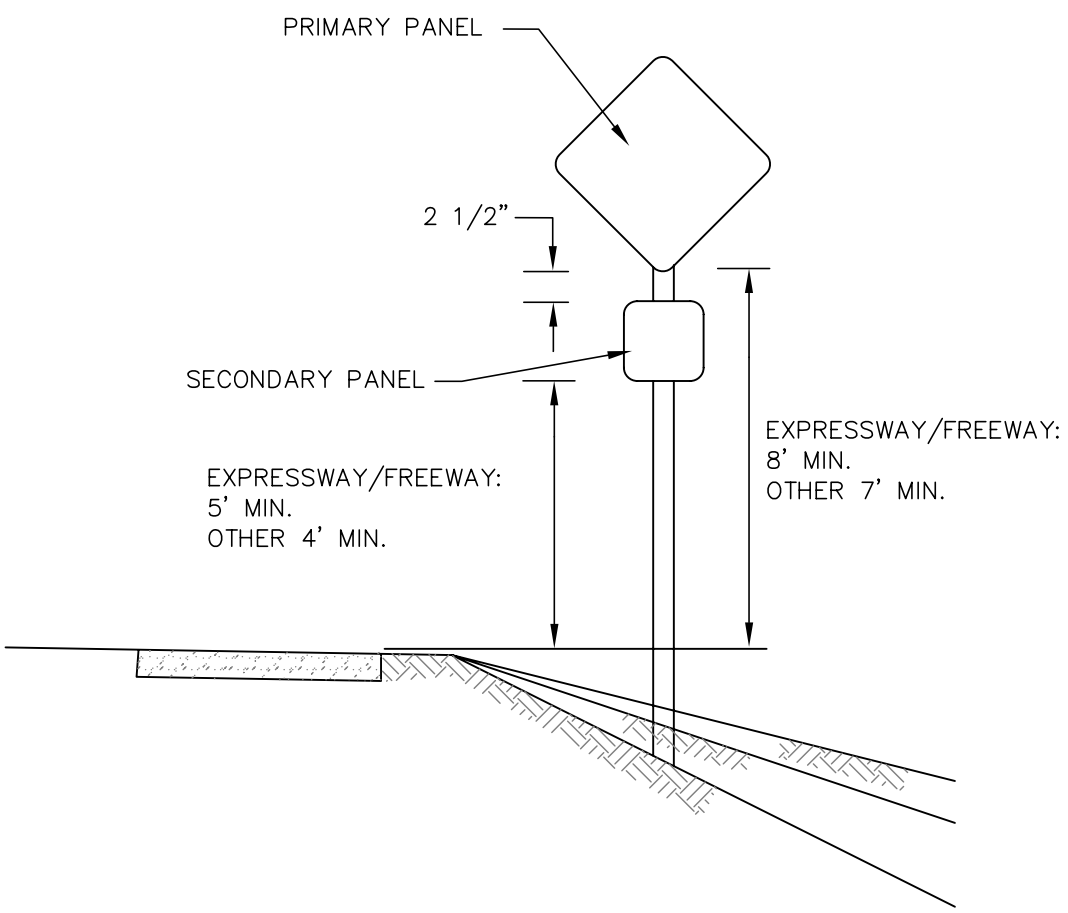

SECONDARY PANEL HEIGHT
ALL TWO PANEL MOUNTING

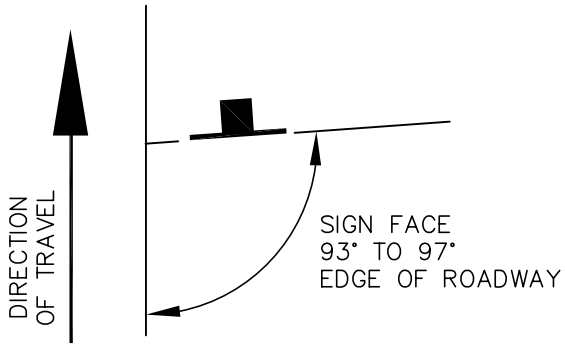

SIGN POSITIONING

MUNICIPALITY OF ANCHORAGE	SCALE: NTS APPROVED: REVISED: 10/08	**POST MOUNTED SIGN SECONDARY PANEL HEIGHT AND SIGN POSITIONING**	SECTION # 70.11 DETAIL # 70–27

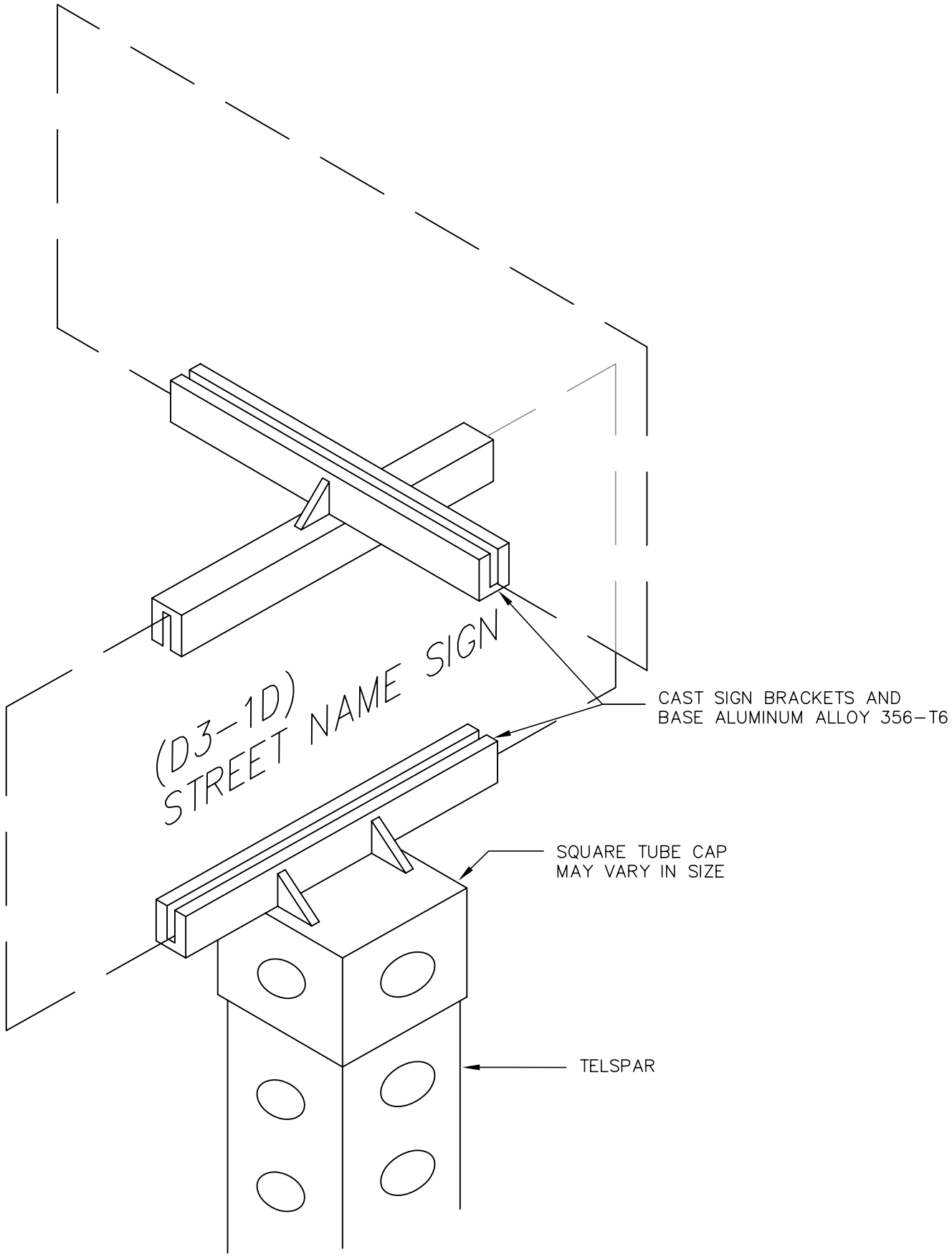

MUNICIPALITY OF ANCHORAGE	SCALE: NTS APPROVED: REVISED: 10/08	**STREET NAME SIGNS**	SECTION # 70.11 DETAIL # 70-28

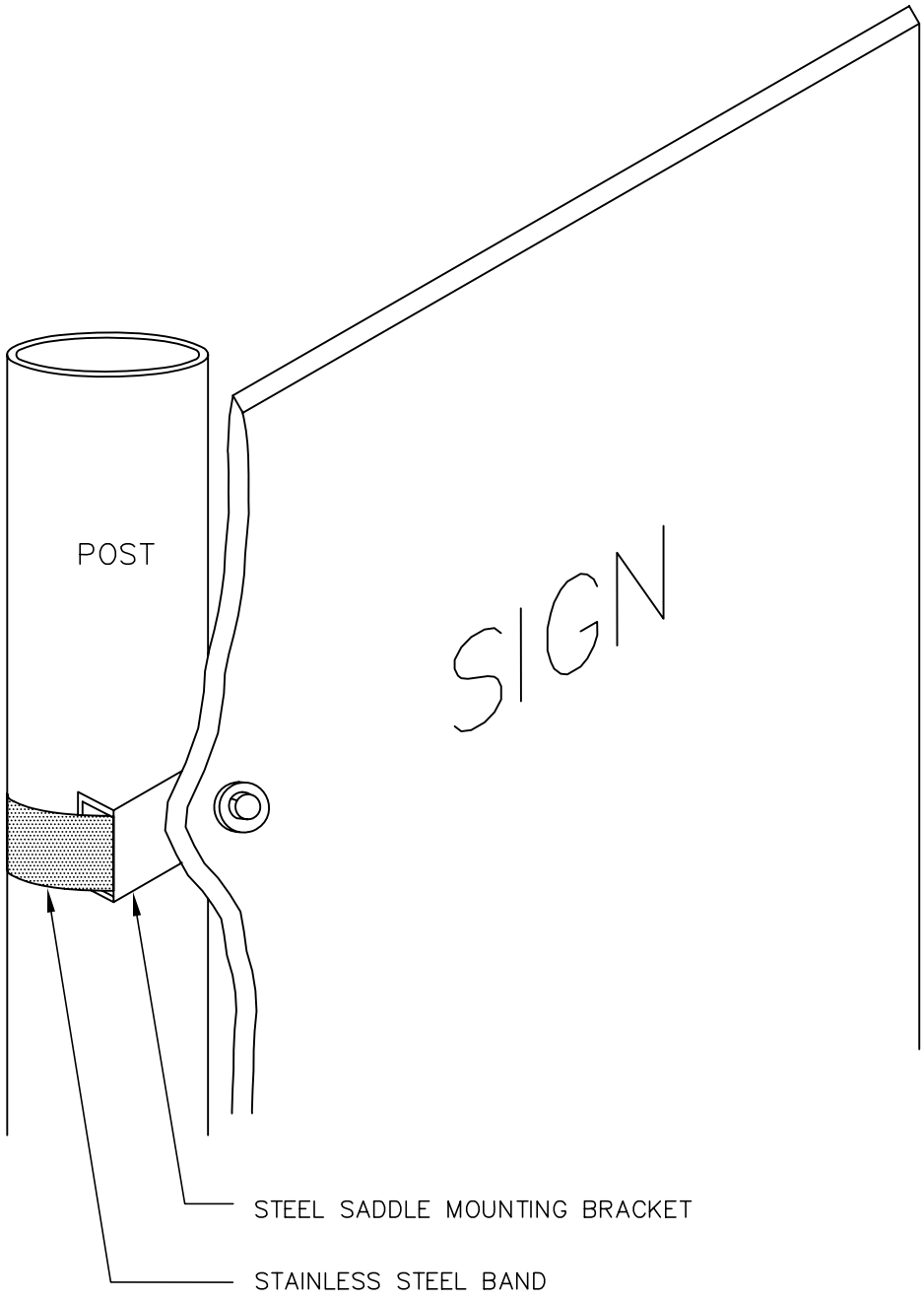

MUNICIPALITY OF ANCHORAGE	SCALE: NTS APPROVED: REVISED: 10/08	**SIGN ON ROUND POST**	SECTION # 70.11 DETAIL # 70–29

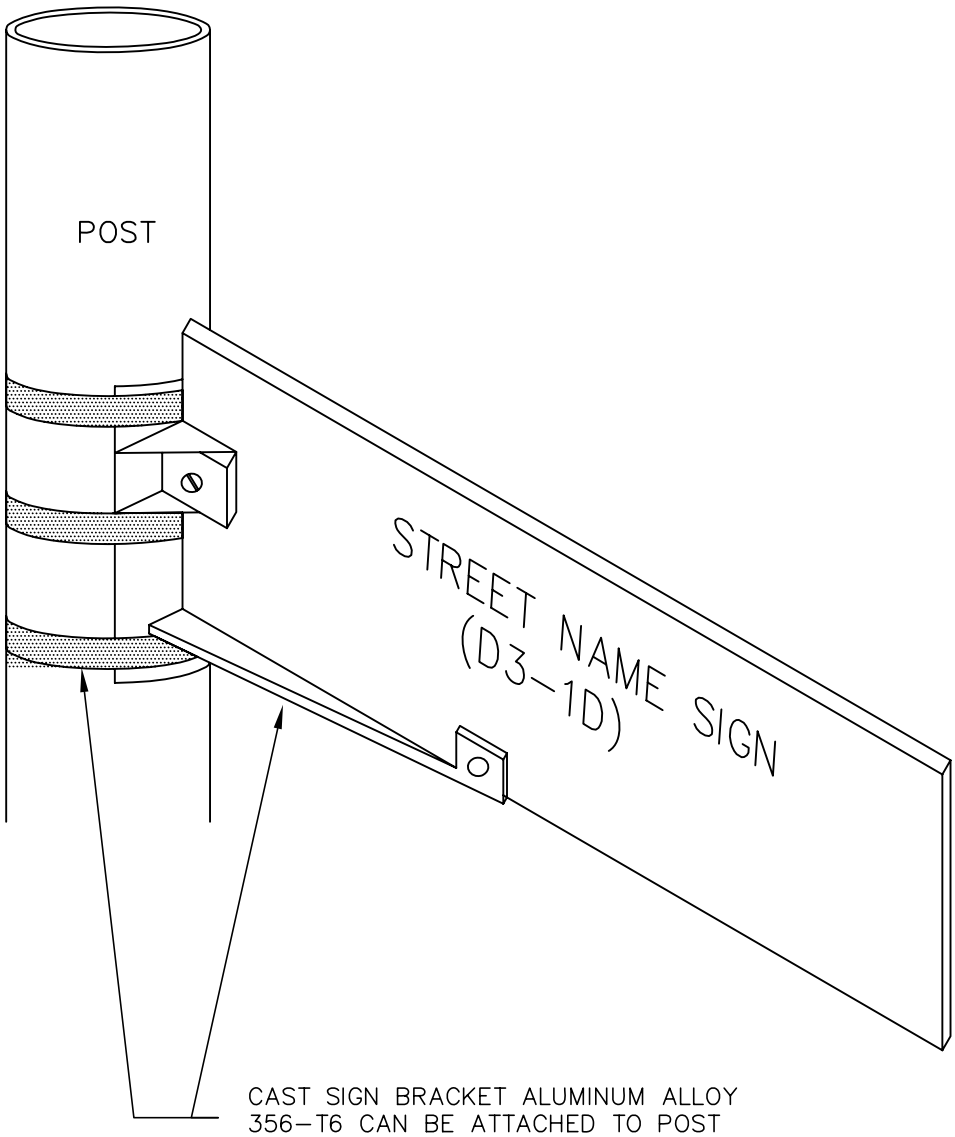

MUNICIPALITY OF ANCHORAGE	SCALE: NTS APPROVED: REVISED: 10/08	**STREET NAME ON ROUND POST**	SECTION # 70.11 DETAIL # 70-30

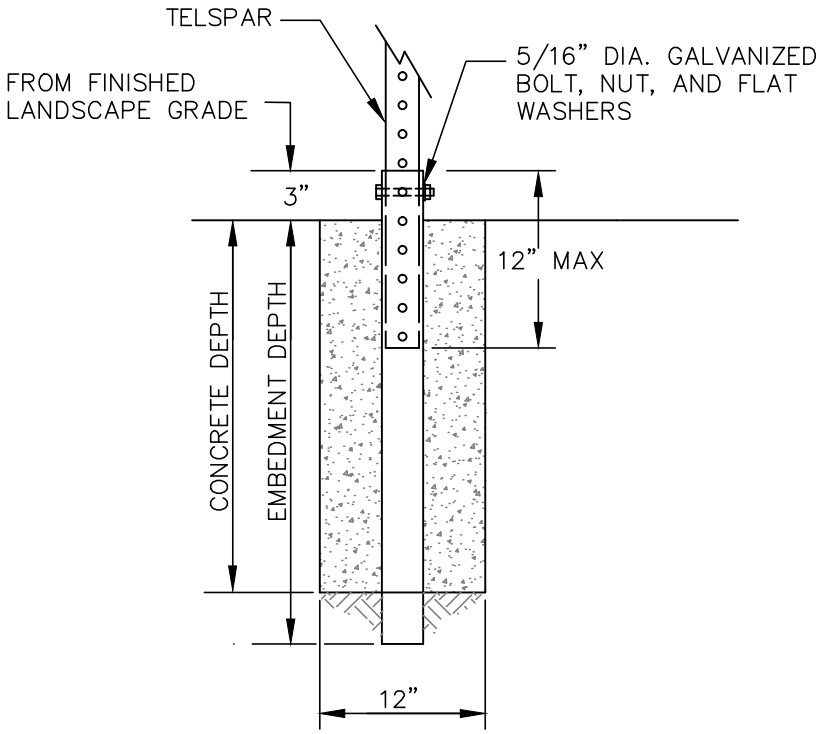

CONCRETE FOUNDATION FOR SIGN POST

PERFORATED STEEL TUBES (P.S.T.) (12ga. – .105" Wall Thickness)			
SIGN SURFACE AREA SQ. FT.	POST SIZE	EMBEDMENT DEPTH	CONCRETE DEPTH
7' OR LESS	2" X 2"	27"	24"
GREATER THAN 7'	2 ½" X 2 ½ "	33"	30"

REVISION: 11/14 FIXED TYPO IN TITLE

MUNICIPALITY OF ANCHORAGE

SCALE: NTS

APPROVED:

REVISED: 11/14

CONCRETE FOUNDATION FOR SIGN POST

SECTION # 70.11

DETAIL # 70–31

RIVET DETAIL ELEVATION VIEW

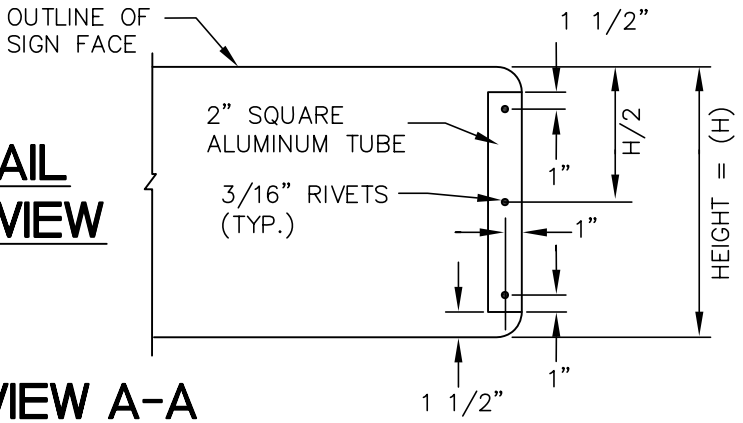

VIEW A-A

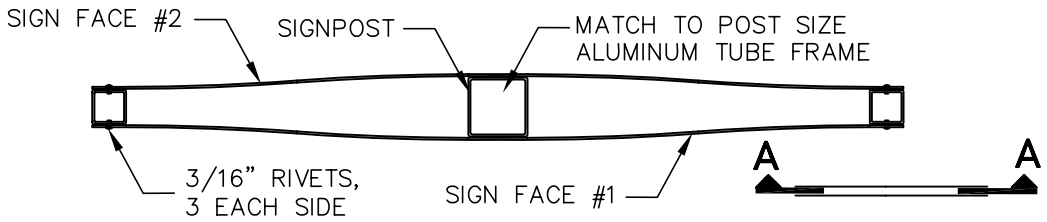

PLAN VIEW

12" SIGNS/PLATES 36" OR GREATER IN LENGTH BRACING DETAIL

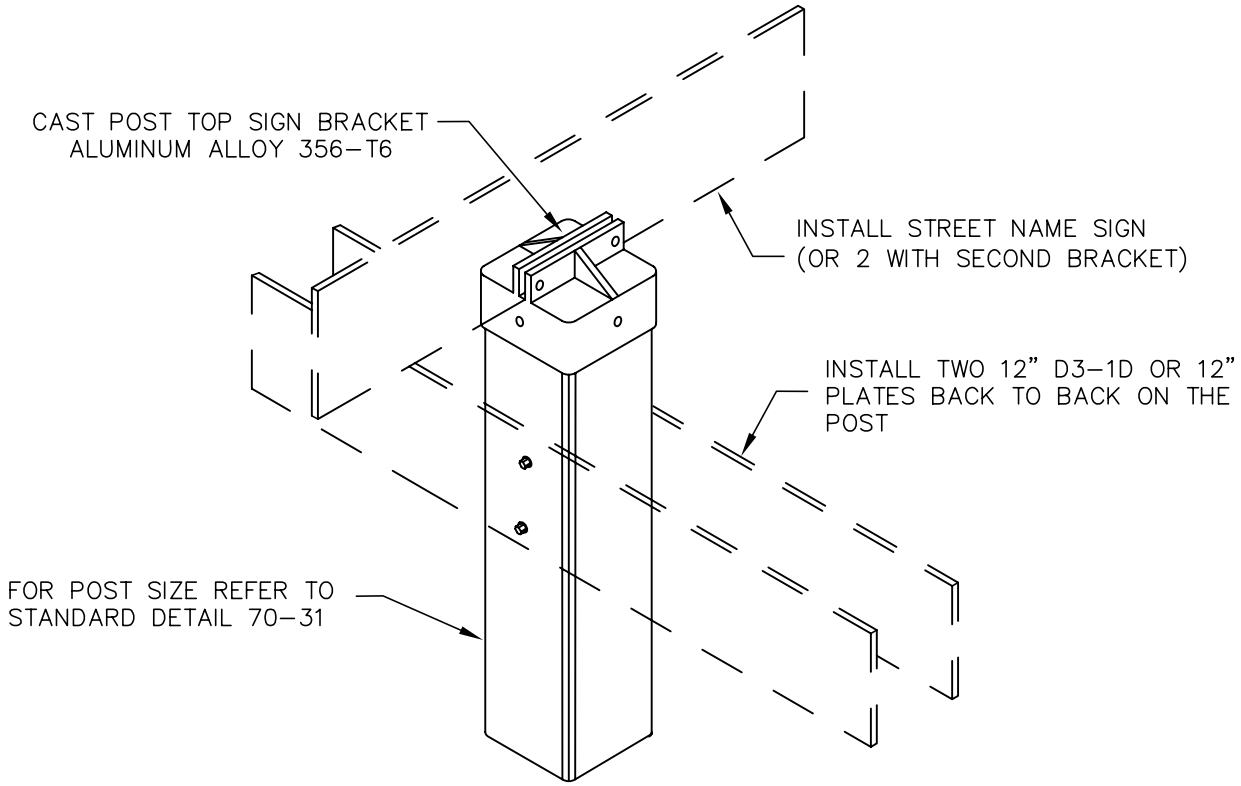

MUNICIPALITY OF ANCHORAGE	SCALE: NTS APPROVED: REVISED: 10/08	**12" PLATE INSTALLATION DETAIL WITH SUPPLEMENTAL 8" D3-1D SIGNS**	SECTION # 70.11 DETAIL # 70-32

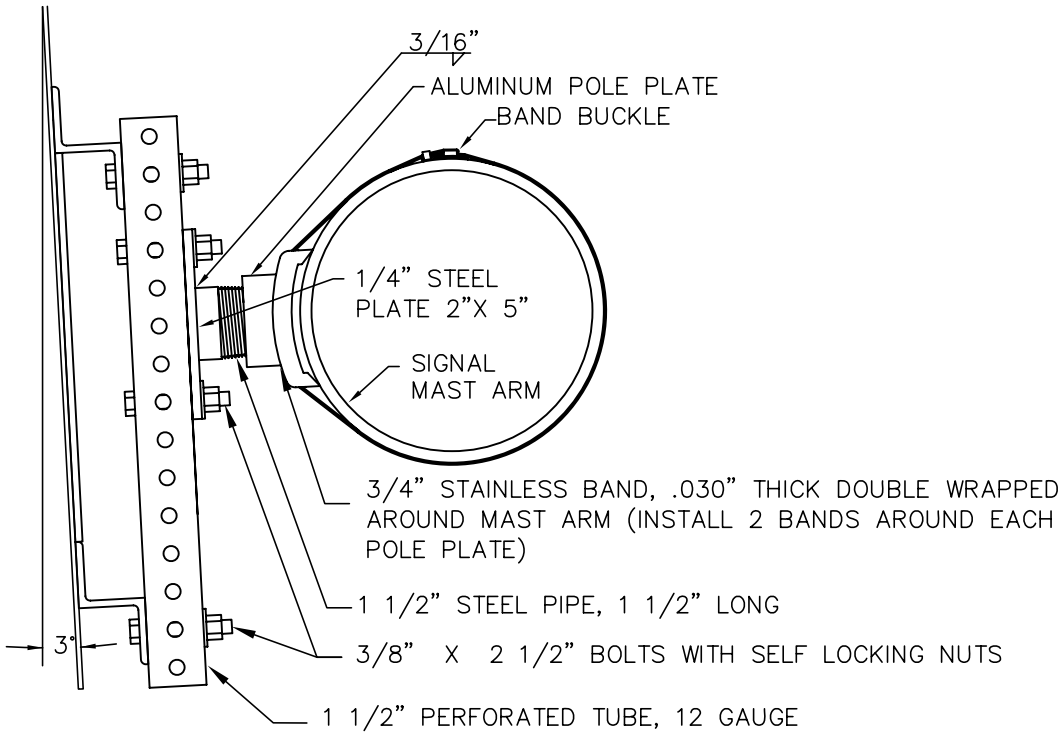

MUNICIPALITY OF ANCHORAGE	SCALE: NTS APPROVED: REVISED: 10/08	**SIGNAL POLE MAST ARM SIGN MOUNTING**	SECTION # 70.11 DETAIL # 70–33

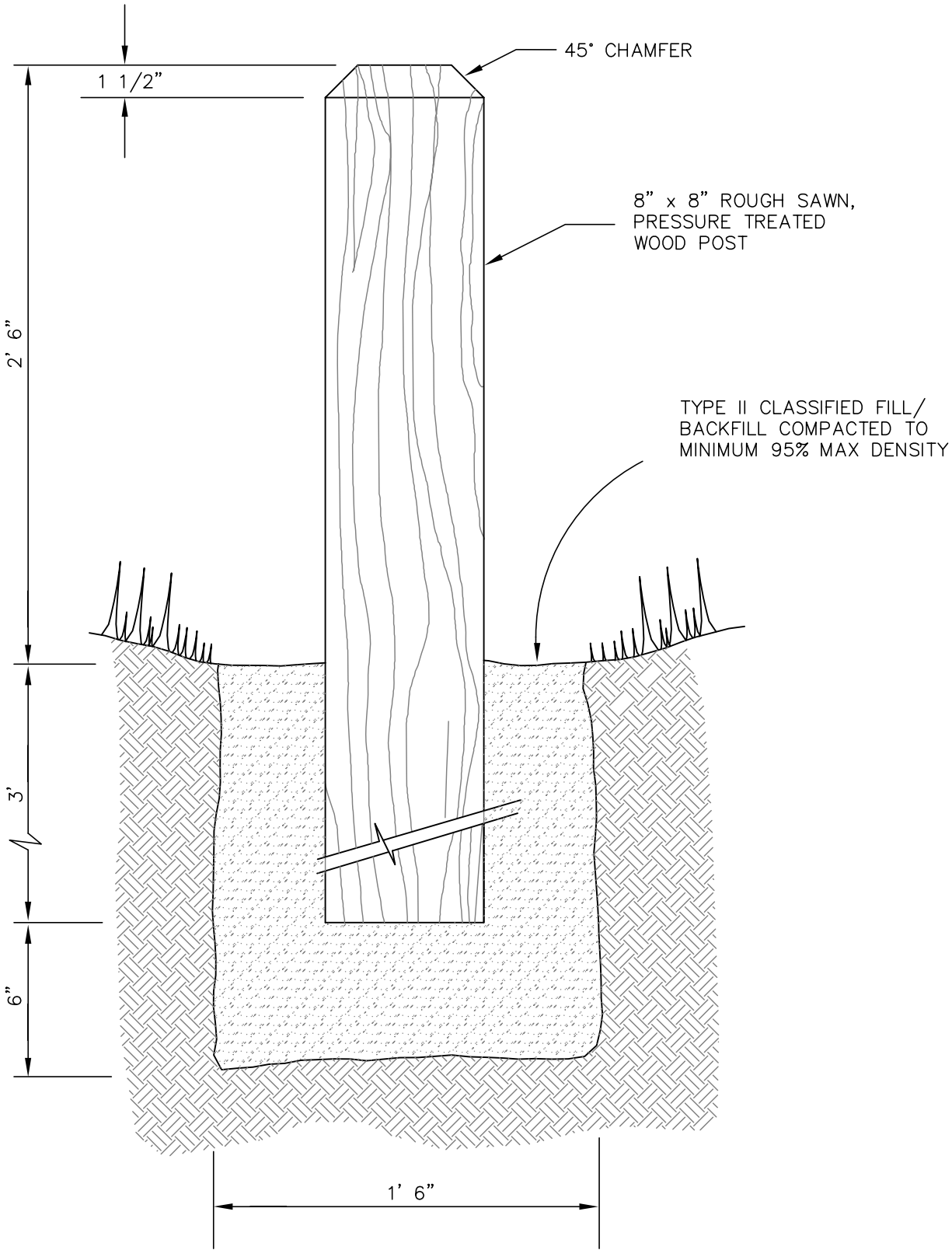

MUNICIPALITY OF ANCHORAGE	SCALE: NTS APPROVED: REVISED: 10/08	# WOOD BOLLARD	SECTION # 70.13 DETAIL # 70–34

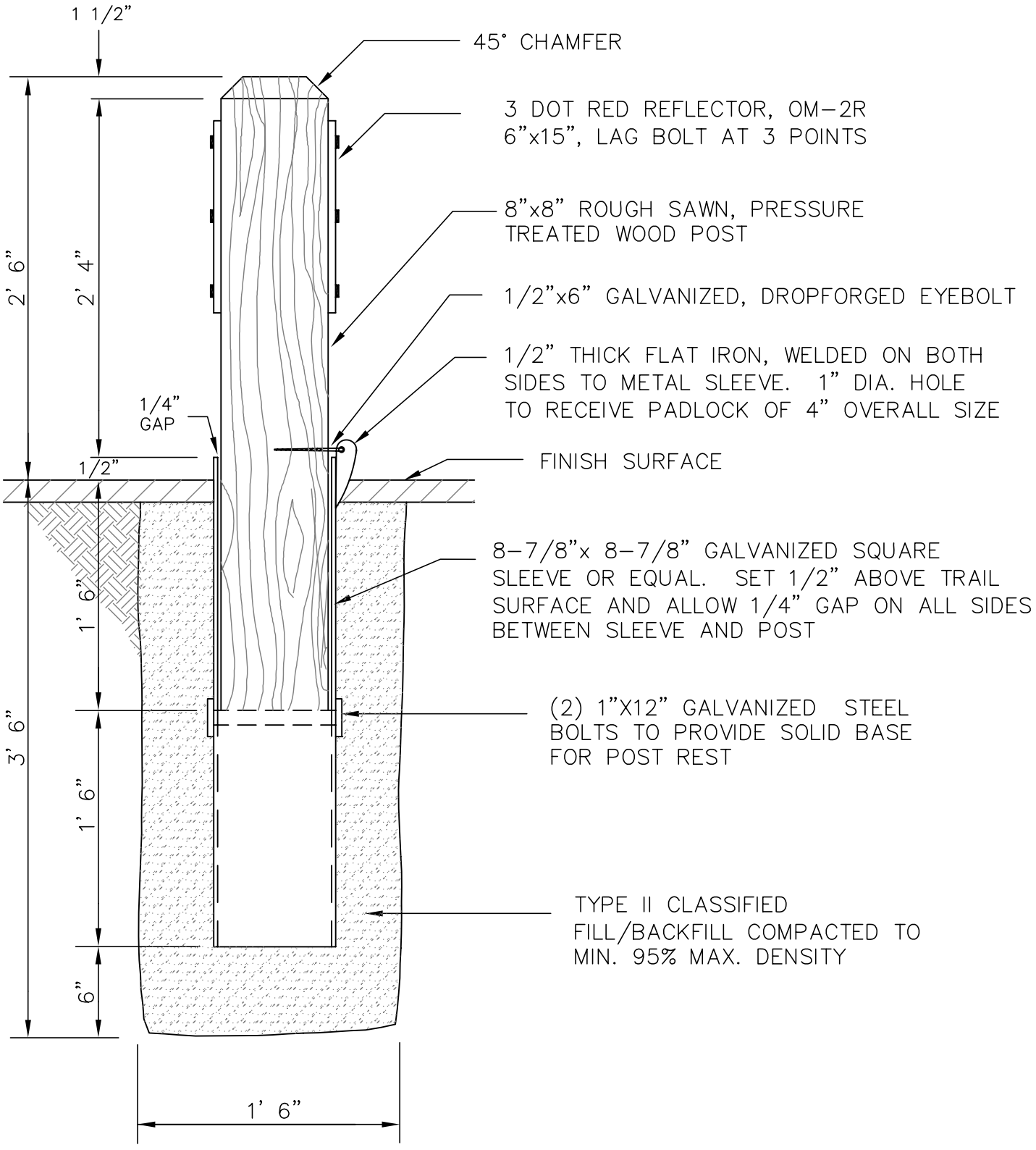

NOTES
1. LOCATE PADLOCK AWAY FROM TRAFFIC FLOW.

MUNICIPALITY OF ANCHORAGE	SCALE: NTS APPROVED: REVISED: 10/08	**REMOVABLE WOOD BOLLARD**	SECTION # 70.13 DETAIL # 70-35

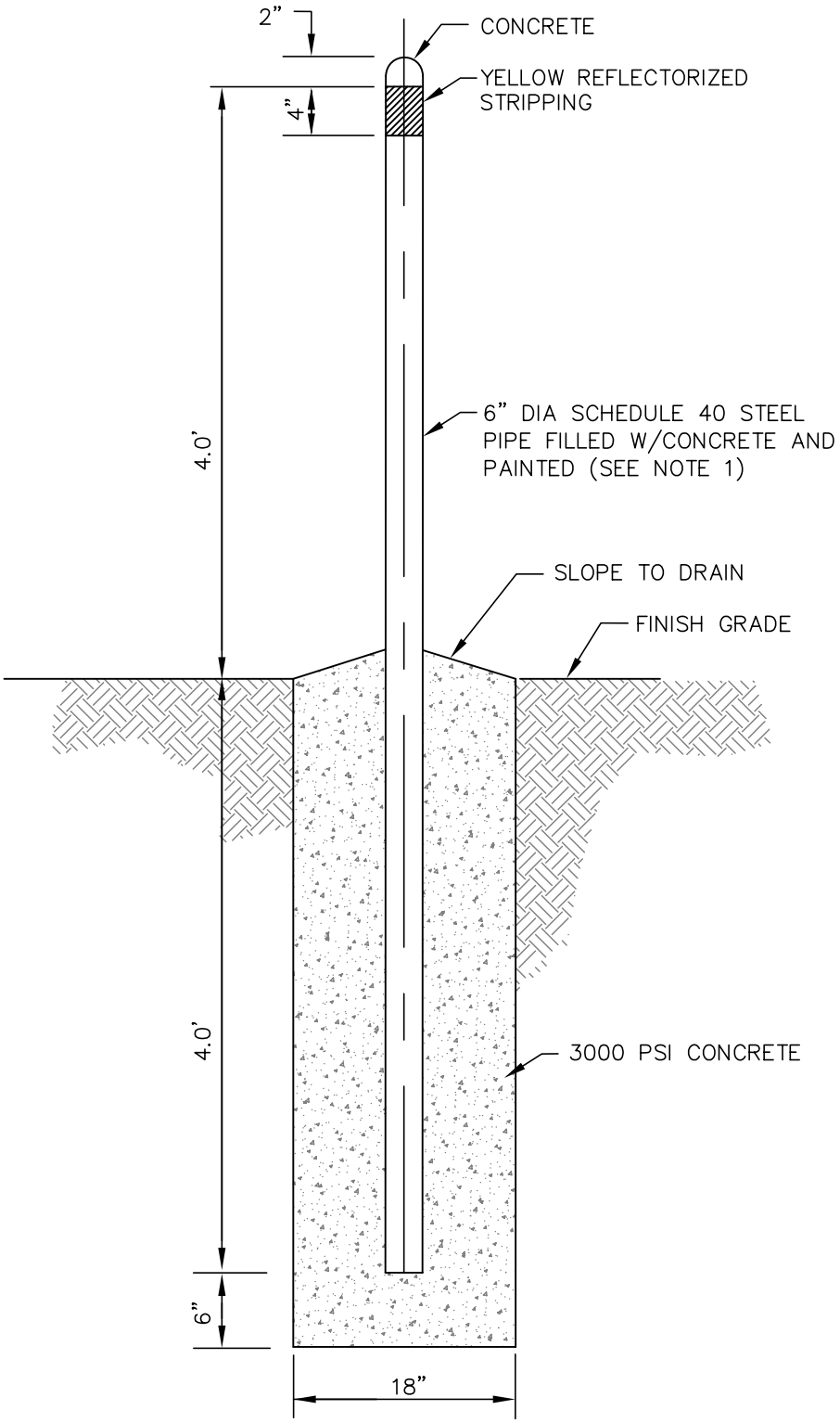

NOTES:

1. POSTS SHALL BE PRIMED AND RECEIVE TWO COATS MINIMUM OF DARK GREEN POWDER COAT PAINT I.A.W. MANUFACTURER'S RECOMMENDATIONS. TOPCOAT WITH TWO COATS YELLOW CARBOLINE 139 UNLESS GUARD POST COVER OR SLEEVE IS INSTALLED.

MUNICIPALITY OF ANCHORAGE	SCALE: NTS APPROVED: REVISED: 10/08	STEEL BOLLARD	SECTION # 70.13 DETAIL # 70–36

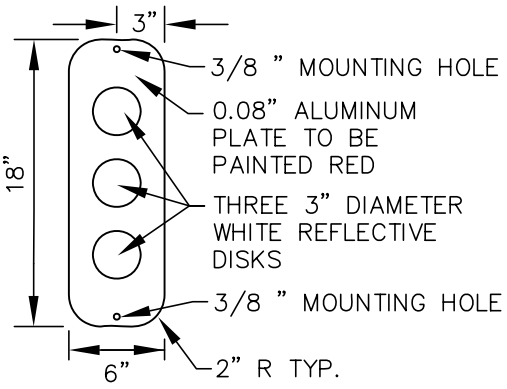

REFLECTOR PLATE

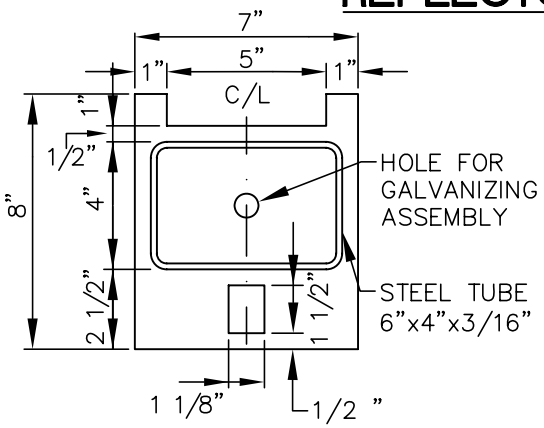

POST BASE PLATE

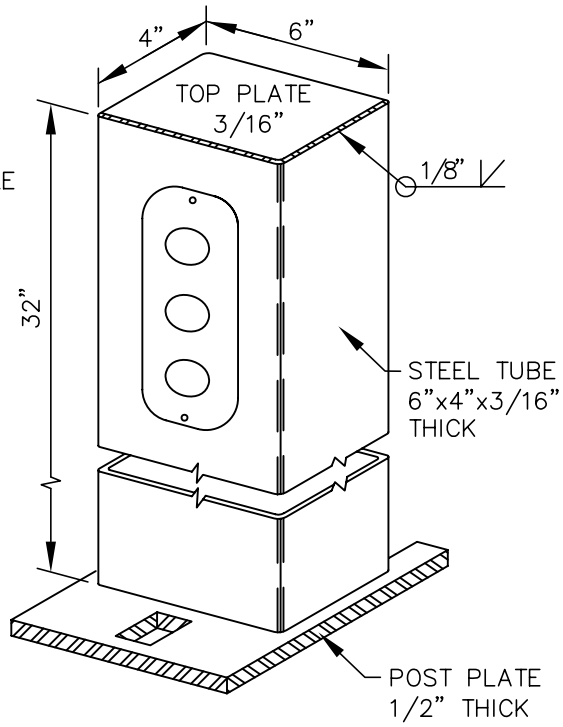

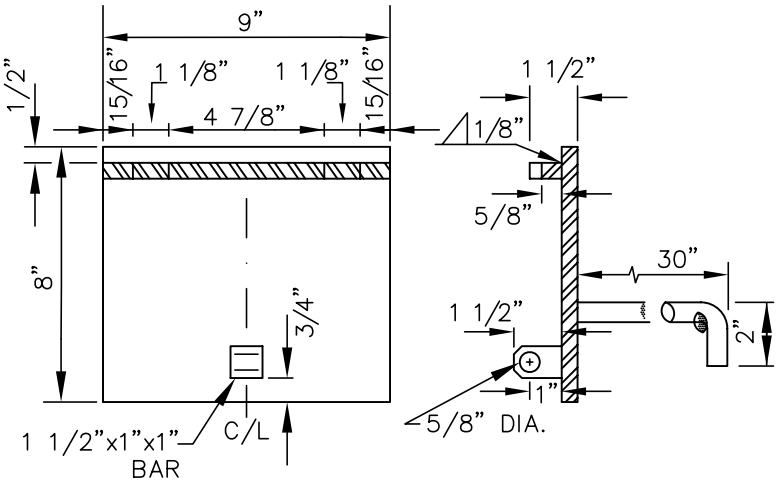

GROUND BASE PLATE

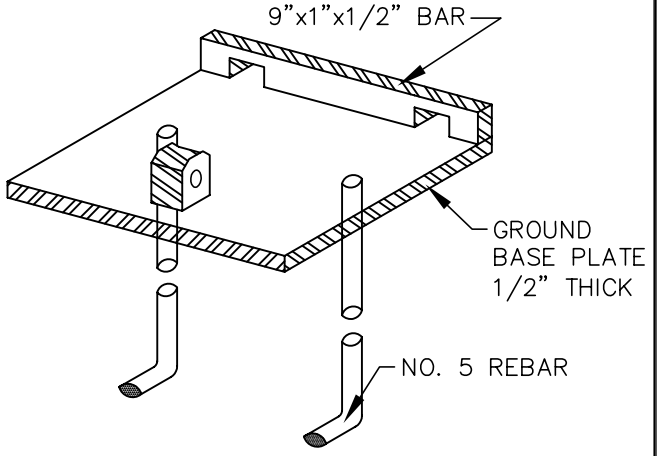

ISOMETRIC VIEW

NOTES:

1. ALL WELDS, UNLESS OTHERWISE SHOWN, SHALL BE THREE–SIXTEENTH INCH (3/16") FILLET – ALL AROUND.
2. CAST IN PLACE WITH CLASS 'A' CONCRETE IN A TWELVE INCH DIAMETER BY THIRTY SIX INCH (12" X 36") FOUNDATION TUBE.
3. REMOVABLE BOLLARDS ARE TO HAVE ADHESIVE REFLECTORS ON BOTH FRONT AND BACK OF POST.
4. ALL EXTERIOR CORNERS AND EDGES SHALL BE ROUNDED TO PROVIDE A PROJECTION FREE SURFACE.

MUNICIPALITY OF ANCHORAGE	SCALE: NTS APPROVED: REVISED: 10/08	REMOVABLE BOLLARD (RECTANGULAR)	SECTION # 70.13 DETAIL # 70–37

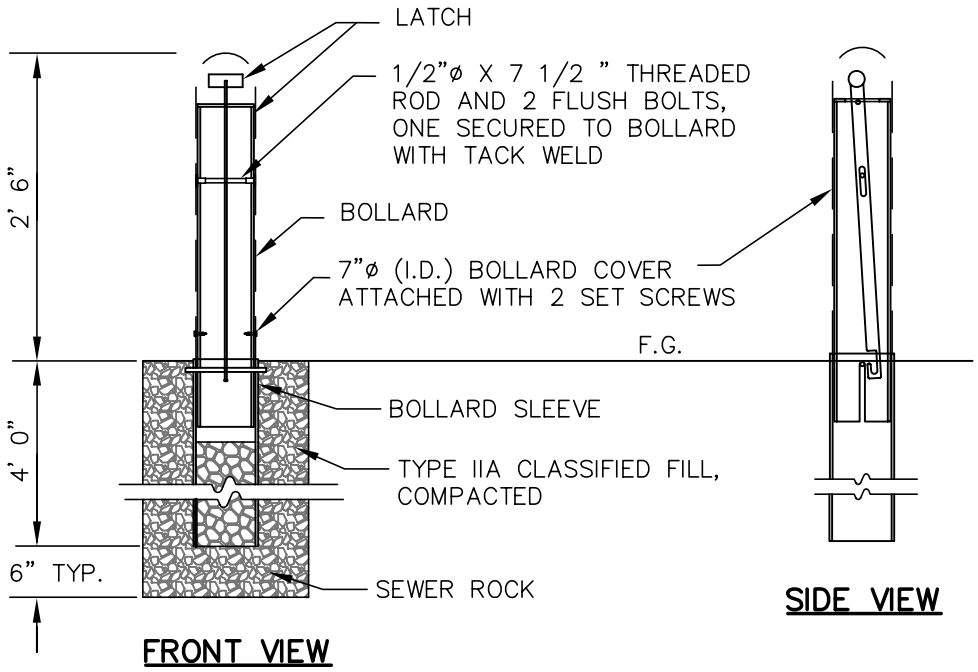

NOTE: ALL FINAL FABRICATIONS TO BE GALVANIZED PRIOR TO ASSEMBLY

REMOVABLE BOLLARD ASSEMBLY

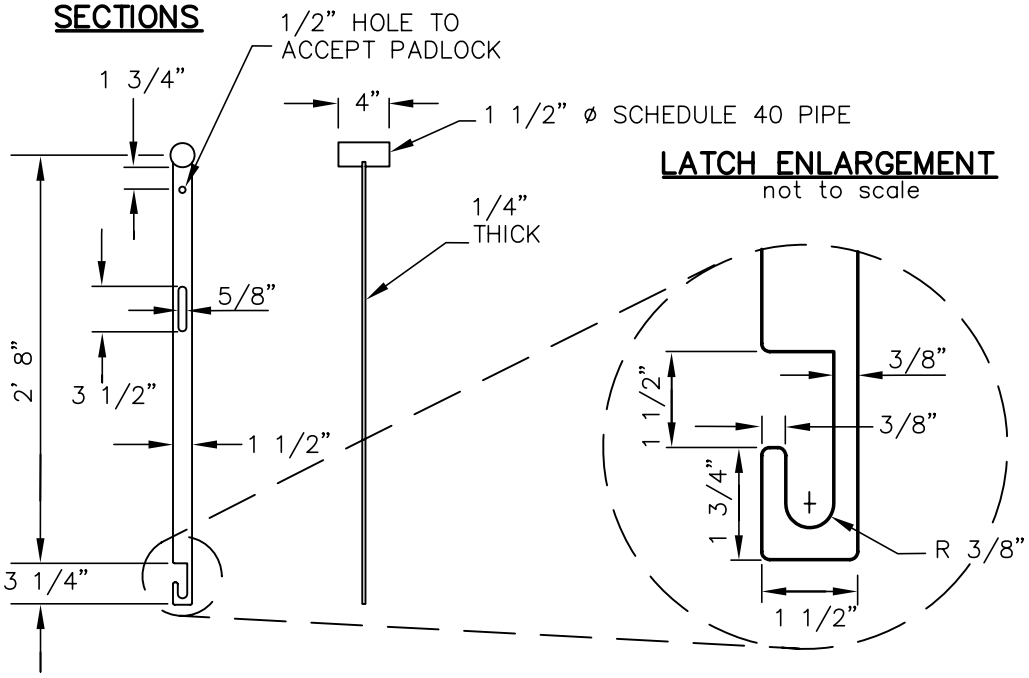

LATCH

MUNICIPALITY OF ANCHORAGE	SCALE: NTS APPROVED: REVISED: 10/08	**REMOVABLE BOLLARD (ROUND)** SHEET 1 OF 2	SECTION # 70.10 DETAIL # 70–38.1

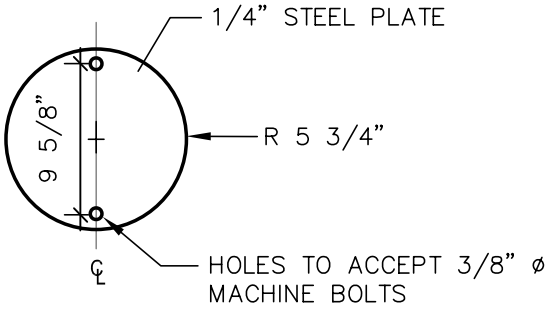

NOTE: PROVIDE 1 TEMPORARY CAP PER REMOVABLE BOLLARD TO OWNER.

REMOVABLE BOLLARD TEMPORARY CAP

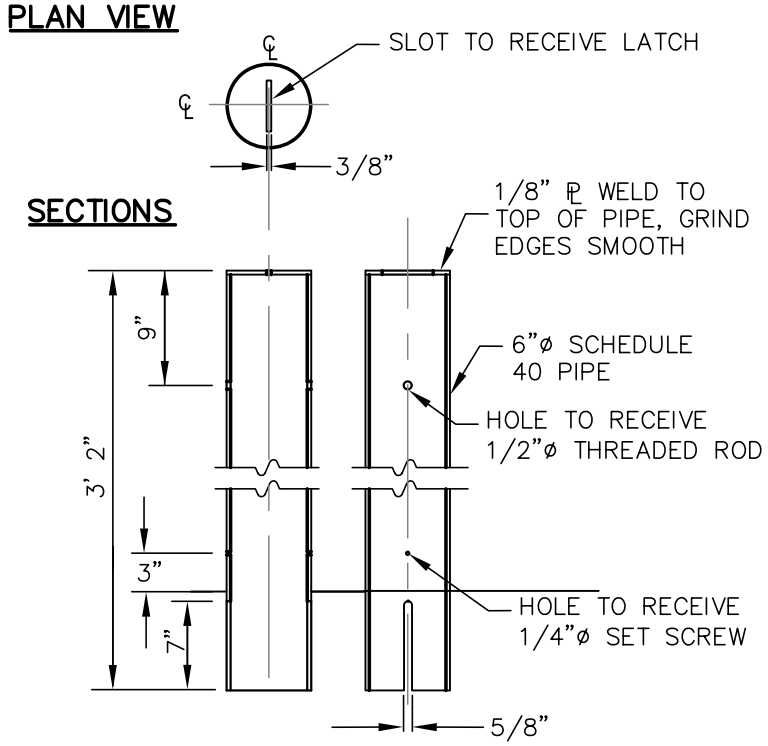

BOLLARD

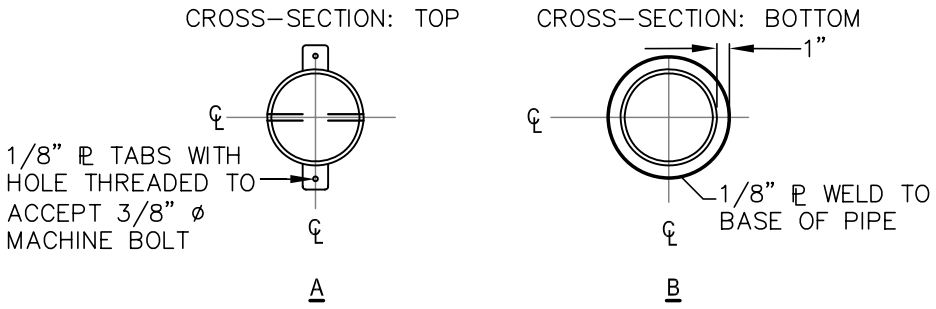

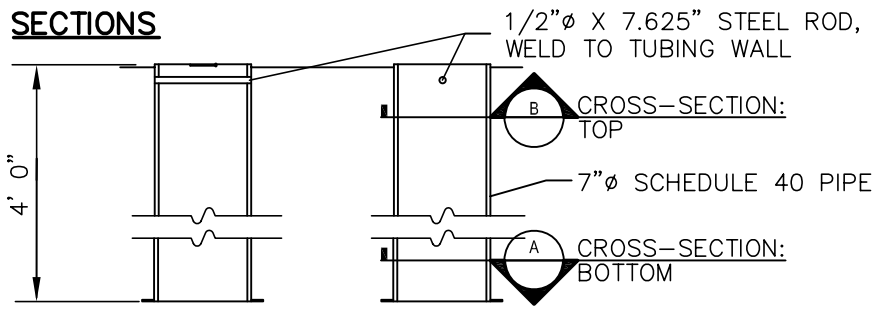

NOTE: SET SLEEVE 1/8"ABOVE ADJACENT SURFACE

BOLLARD SLEEVE

MUNICIPALITY OF ANCHORAGE	SCALE: NTS APPROVED: REVISED: 10/08	**REMOVABLE BOLLARD (ROUND)** SHEET 2 OF 2	SECTION # 70.10 DETAIL # 70-38.2

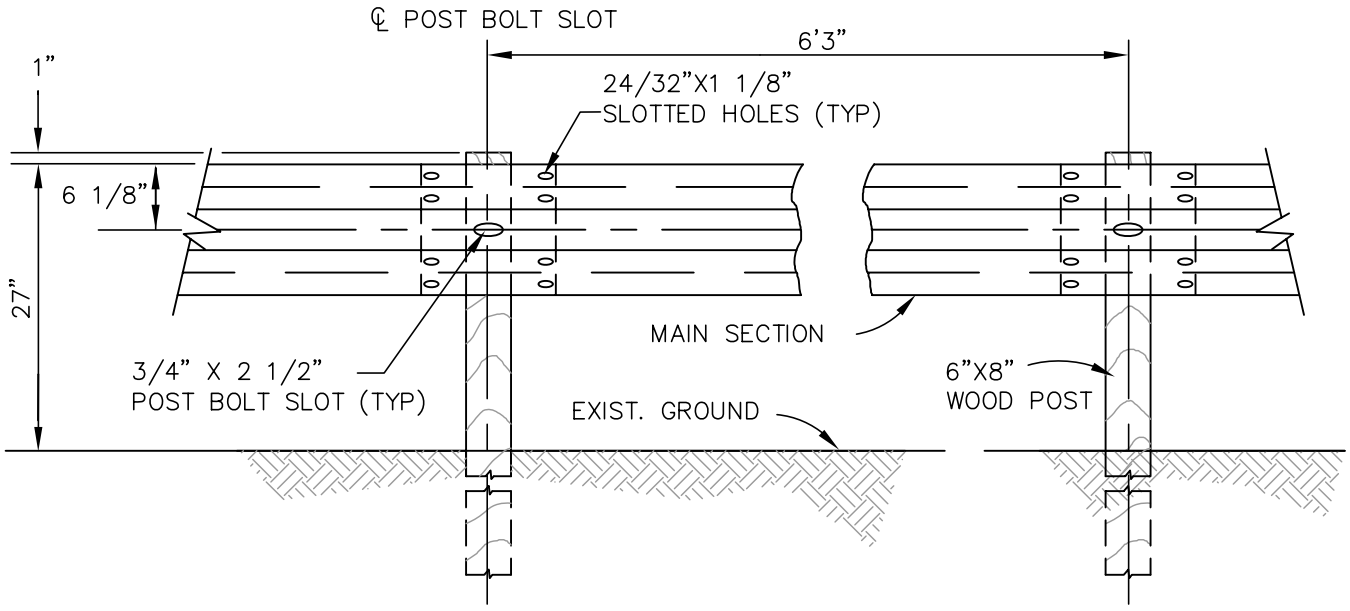

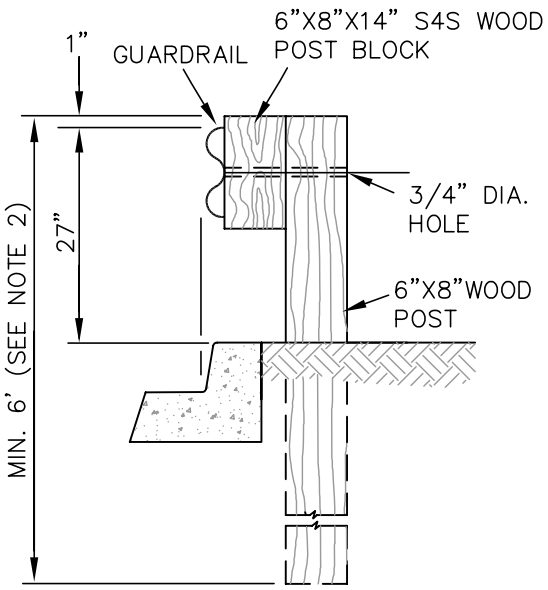

WOOD POST

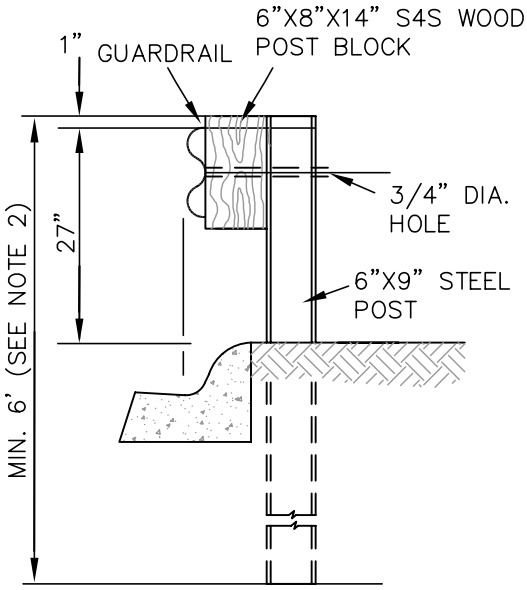

STEEL POST

NOTES:

1. PROVIDE GUARD RAIL OF TYPE AND GAUGE SPECIFIED IN THE CONTRACT DOCUMENTS.
2. WHEN INFORMATION IS NOT INCLUDED IN THE CONTRACT DOCUMENTS, SEE ADOT&PF STANDARD DRAWING G–10 FOR GUARDRAIL POST LENGTHS CORRESPONDING TO COMBINATIONS OF SLOPE AND BEHIND–POST EMBANKMENT WIDTHS.
3. END TREATMENTS SHALL BE CONSTRUCTED AS SHOWN ON DRAWINGS.

REVISION: 2/10 WOOD BLOCK INSTEAD OF STEEL ON STEEL POST TO MEET TL–3; MOVED FACE OF GUARDRAIL TO FACE OF CURB; REMOVED END TREATMENT LANGUAGE

MUNICIPALITY OF ANCHORAGE	SCALE: NTS APPROVED: REVISED: 2/10	GUARD RAIL DETAIL	SECTION # 70.15 DETAIL # 70–39

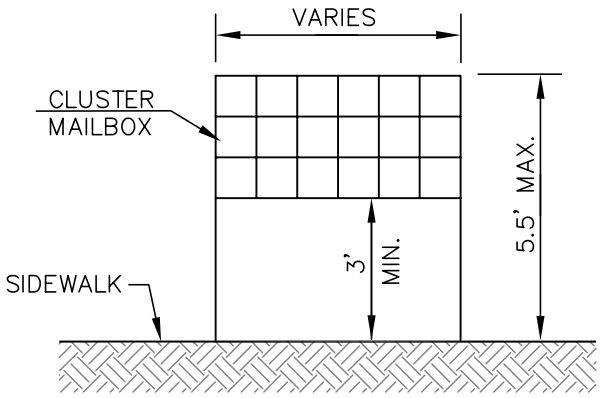

FRONT VIEW

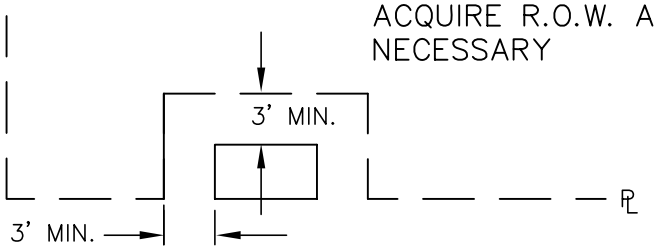

REQUIRED R.O.W.

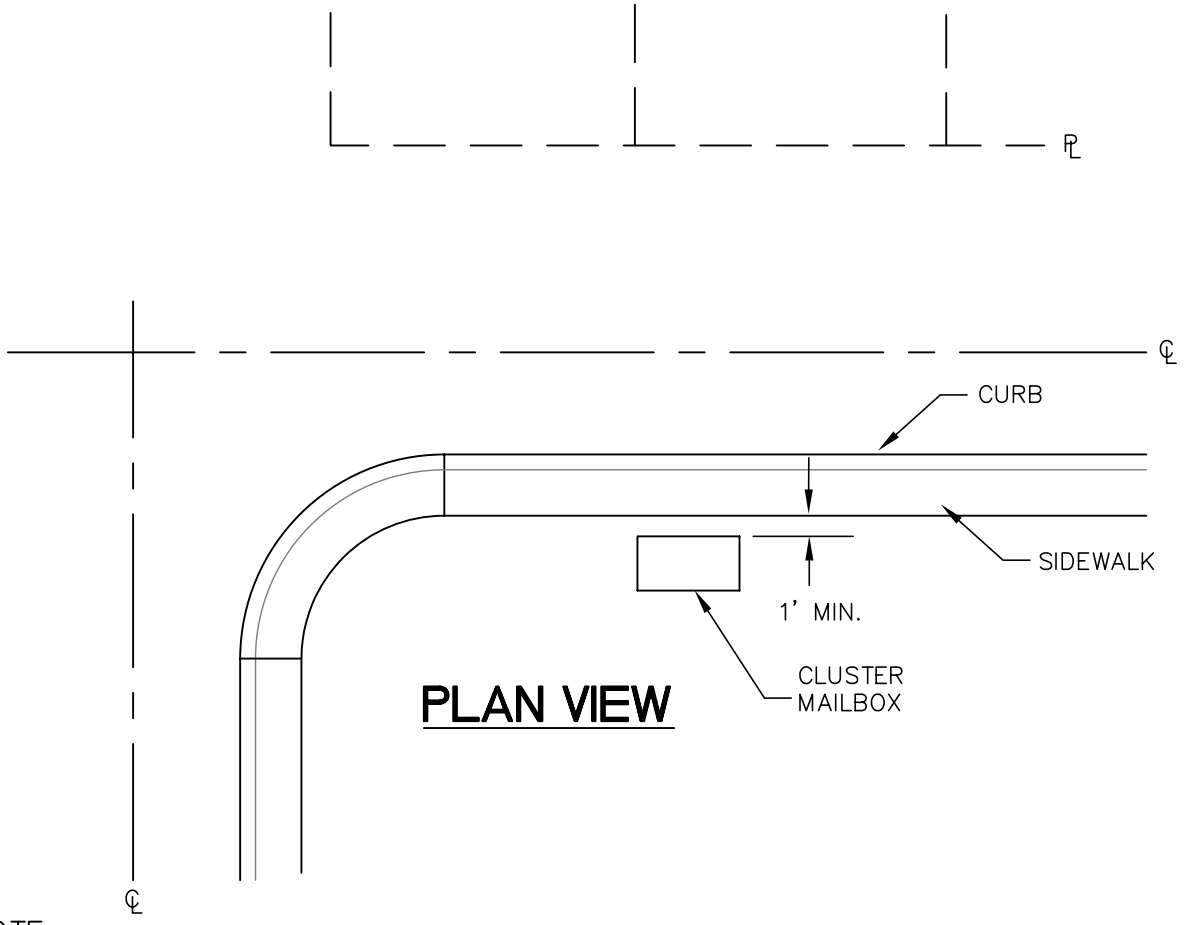

PLAN VIEW

NOTE:

1. COORDINATE WITH LOCAL POSTAL AUTHORITIES TO DETERMINE LOCATIONS OF CLUSTER MAILBOXES. IF CLUSTERING OR SPECIAL LOCATIONS ARE SPECIFIED, PROVISIONS SHALL BE INCLUDED IN THE CONTRACT DOCUMENTS.

MUNICIPALITY OF ANCHORAGE	SCALE: NTS APPROVED: REVISED: 10/08	CLUSTER MAILBOX LOCATION	SECTION # 70.16, 17 DETAIL # 70–40

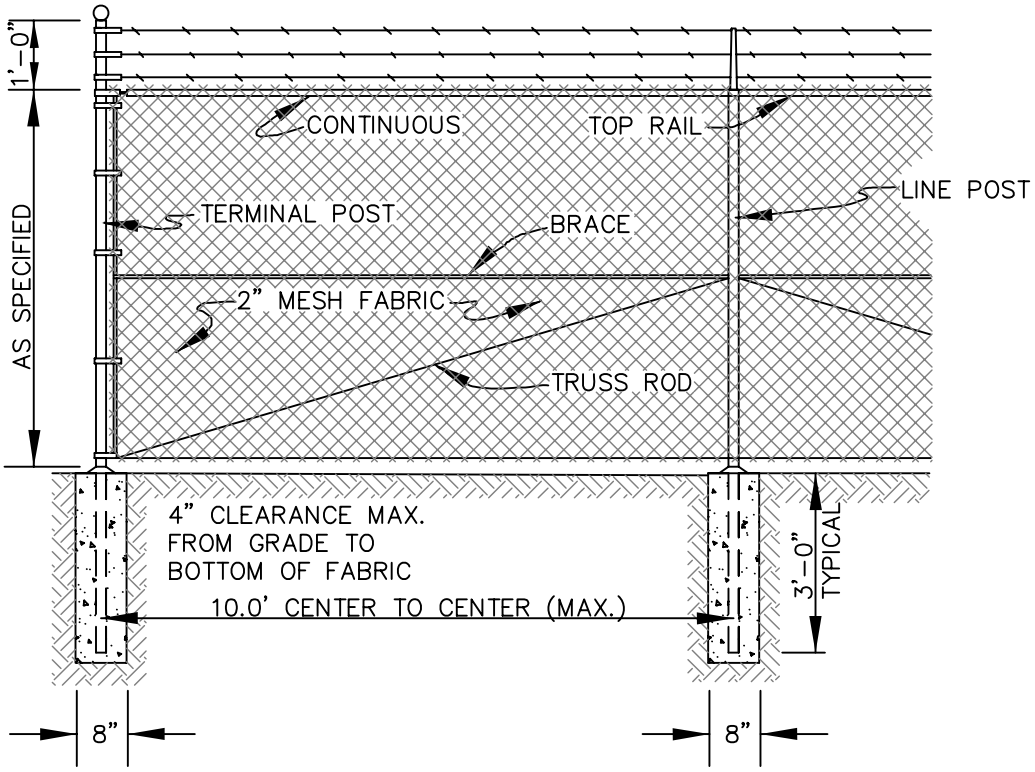

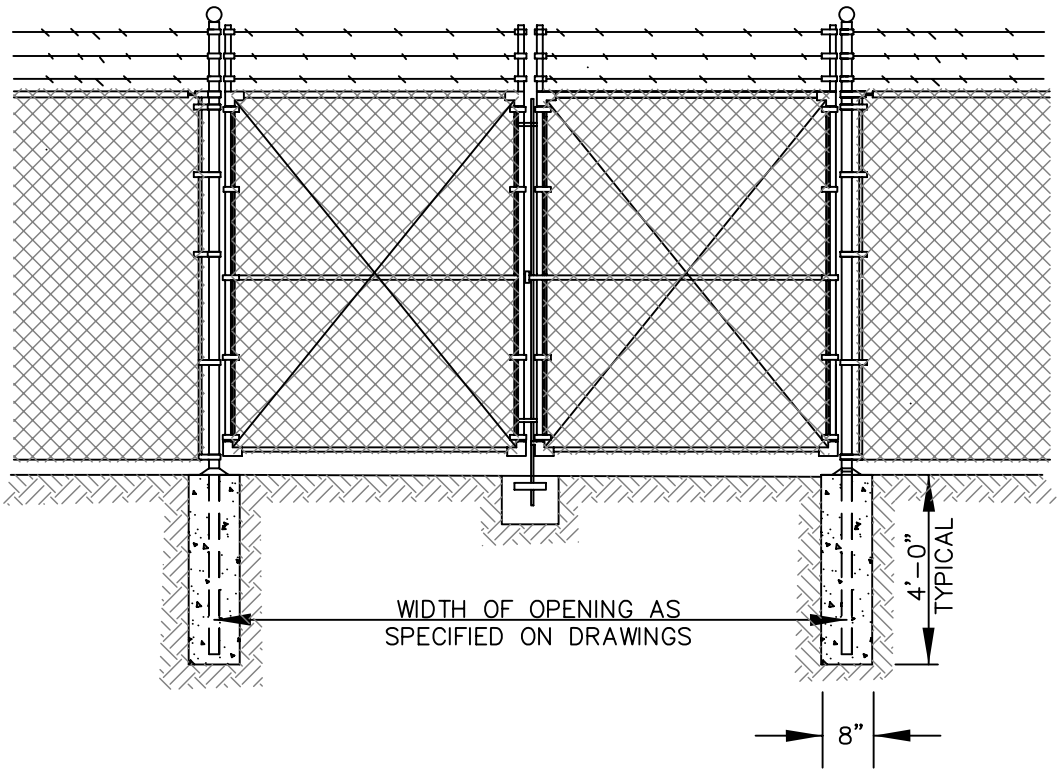

NOTES:

1. GAUGE OF FABRIC AS SPECIFIED ON DRAWINGS.
2. SIZE OF TUBULAR STEEL FOR GATE FRAMES IS SPECIFIED IN SECTION 70.18 – CHAIN LINK FENCES.

MUNICIPALITY OF ANCHORAGE	SCALE: NTS APPROVED: REVISED: 10/08	**FENCE DETAILS**	SECTION # 70.18 DETAIL # 70–41

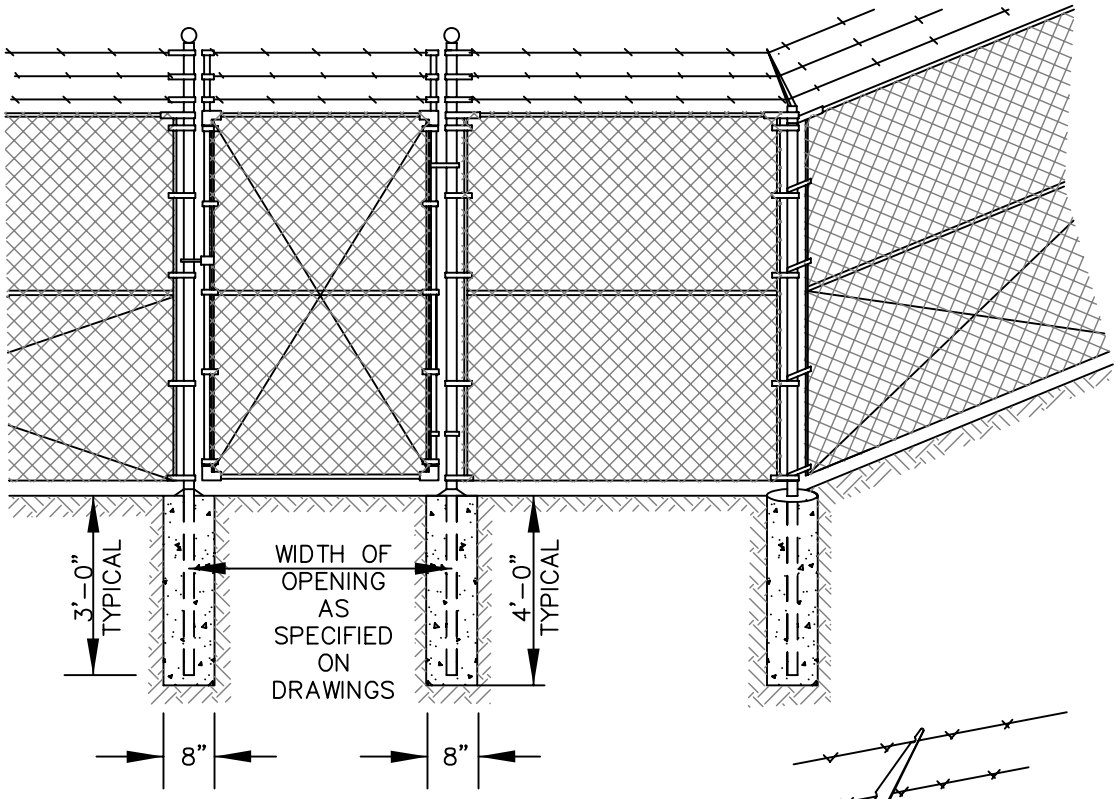

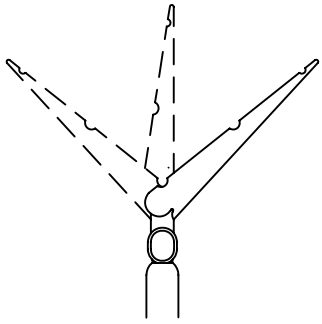

H-H EYETOP LINETOP FITTING

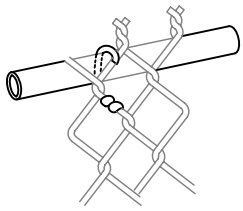

METHOD OF TYING FABRIC TO TOP RAIL

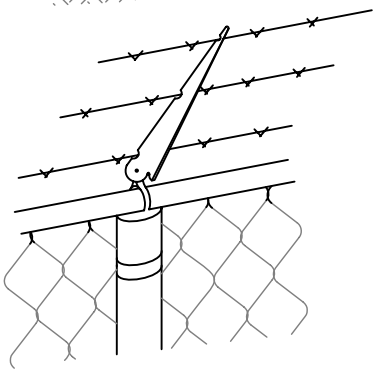

TOP FINISH OF STEEL GUARD POST

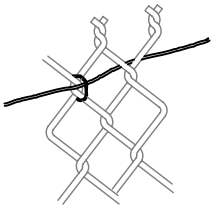

METHOD OF TYING FABRIC TO COIL SPRING TENSION WIRE

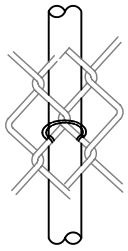

METHOD OF TYING FABRIC TO TUBULAR POST

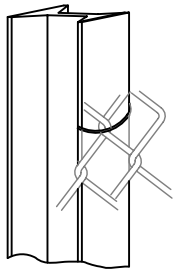

METHOD OF TYING FABRIC TO H-POST

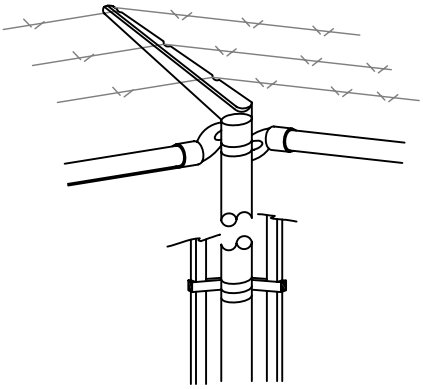

CORNER POST CONNECTION

NOTE:

1. SIZE OF TUBULAR STEEL FOR GATES IS SPECIFIED IN SECTION 70.18 – CHAIN LINK FENCES.

MUNICIPALITY OF ANCHORAGE	SCALE: NTS APPROVED: REVISED: 10/08	FENCE DETAILS	SECTION # 70.18 DETAIL # 70-42