MUNICIPALITY OF ANCHORAGE
STANDARD SPECIFICATIONS

2009
REVISION 3

Effective Date: 4/1/2013

The most current version of the Municipality of Anchorage Standards and Specifications (M.A.S.S.) is provided on the Municipality website at http://www.muni.org/Departments/works/project_management/Pages/MASS.aspx. Notifications will be sent when updates are made to the document, but each user of M.A.S.S. is responsible to verify that they are using the most current version.

If you notice any errors or omissions, or have suggestions for improvements to M.A.S.S., send an email to massupdate@muni.org. The emails will be used to develop future updates to M.A.S.S.

MUNICIPALITY OF ANCHORAGE
STANDARD SPECIFICATIONS

INDEX

DIVISION	DESCRIPTION	PAGE COLOR
10	General Provisions	Cream
20	Earthwork	Tan
30	Portland Cement Concrete	Pink
40	Asphalt Surfacing	Gray
50	Sanitary Sewers	Yellow
55	Storm Drain Systems	Salmon
60	Water Systems	Blue
65	Construction Survey	Cherry
70	Miscellaneous	Purple
75	Landscaping Improvements	Green
80	Traffic Signals & Illumination	Gold

MUNICIPALITY OF ANCHORAGE
STANDARD SPECIFICATIONS

DIVISION 10
GENERAL PROVISIONS

STANDARD GENERAL PROVISIONS
DIVISION 10
INDEX

SECTION 10.01	DEFINITIONS	1
SECTION 10.02	BIDDING REQUIREMENTS AND CONDITIONS	7
Article 2.1	Examination of Bidding Documents and Site	7
Article 2.2	Interpretation or Correction of Bidding Documents	7
Article 2.3	Preparation and Submission of Bids	8
Article 2.4	Bid Guarantee	8
Article 2.5	Disadvantaged and Woman Owned Business Enterprises (DBE/WBE) Requirements	8
SECTION 10.03	AWARD AND EXECUTION OF CONTRACT	9
Article 3.1	General	9
Article 3.2	Receipt and Opening of Bids	9
Article 3.3	Bidder Qualifications	9
Article 3.4	Action on Bids	10
Article 3.5	Bonds, Insurance, EEO and DBE/WBE Forms	11
Article 3.6	Execution of Contract	11
Article 3.7	Contractor's Warranty	12
SECTION 10.04	SCOPE OF WORK	13
Article 4.1	Intent of the Contract Documents	13
Article 4.2	Interpretation of Contract, Specifications, and Drawings	13
Article 4.3	Submittal List	14
Article 4.4	Estimates of Quantities	14
Article 4.5	Increased Quantities	14
Article 4.6	Decreased Quantities	15
Article 4.7	Reference Stakes and Surveying	16
Article 4.8	Work Incidental to the Contract	16
Article 4.9	Disposal Sites	17
Article 4.10	Protection of Persons, Property and Environment	17
Article 4.11	Private Property in Right-of-Way	18
Article 4.12	Public Convenience and Access	18
Article 4.13	Traffic Control Plan	19
Article 4.14	Maintenance and Drainage	21
Article 4.15	Temporary Erosion Control and Storm Water Pollution Prevention Plans for Construction	22
Article 4.16	Temporary Utilities	23
Article 4.17	Utilities	23
Article 4.18	Utility Connections	27
Article 4.19	Record Documents	28
Article 4.20	Operating and Maintenance Manuals	29

SECTION 10.05 CONTROL OF WORK 30
Article 5.1 Authority of the Engineer 30
Article 5.2 Prosecution of the Work 30
Article 5.3 Construction Progress Schedule and Schedule of Values 31
Article 5.4 Non-Working Hours, Holidays, Saturdays, and Sundays 32
Article 5.5 Shop Drawings 32
Article 5.6 Product Data 33
Article 5.7 Materials 34
Article 5.8 Testing of Materials 35
Article 5.9 Contractor's Authorized Representatives and Employees 35
Article 5.10 Subcontracting 36
Article 5.11 Right of the Municipality to Do Work 37
Article 5.12 Safeguarding of Excavations 37
Article 5.13 Duties of Inspectors 37
Article 5.14 Inspection 38
Article 5.15 Work Limits, Easements, and Rights-of-Way 38
Article 5.16 Responsibility for Damages 39
Article 5.17 Repair of Damages Caused by Contractor 39
Article 5.18 Changed Conditions 39
Article 5.19 Unauthorized and Defective Work 40
Article 5.20 Changes in the Work 40
Article 5.21 Claims for Additional Compensation 41
Article 5.22 Time for Completion of Work 43
Article 5.23 Delays and Extension of Time 43
Article 5.24 Suspension of Work 43
Article 5.25 Final Trimming of Work 44
Article 5.26 Final Inspection 45
Article 5.27 Liquidated Damages 46
Article 5.28 Termination of Contract by Owner 46
Article 5.29 Termination of Work for Owners Convenience 47
Article 5.30 Use of Completed or Uncompleted Portions 48
Article 5.31 Winter Suspension 48
Article 5.32 Pre-Construction Conference 52
Article 5.33 Use of Explosives 52

SECTION 10.06 LEGAL RELATIONS AND RESPONSIBILITIES 53
Article 6.1 Laws to be Observed 53
Article 6.2 Notice to Contractors 53
Article 6.3 Notice by Contractors 53
Article 6.4 Successors and Assigns 53
Article 6.5 Assignments 53
Article 6.6 Permits 53
Article 6.7 Copyrights and Patents 54
Article 6.8 Safety 54
Article 6.9 Insurance 55
Article 6.10 Indemnification 56
Article 6.11 Claims by Workmen, Suppliers, and Subcontractors 57
Article 6.12 Certified Payroll 57
Article 6.13 Lawsuits 57
Article 6.14 Preference to Local Labor 58
Article 6.15 State of Alaska Prevailing Wage Scale 58
Article 6.16 Nondiscrimination 58
Article 6.17 Rights and Remedies 58
Article 6.18 Payment of Taxes 59

SECTION 10.07 MEASUREMENT AND PAYMENT 60
Article 7.1 Method of Measurement 60
Article 7.2 Scope of Payment 61
Article 7.3 Advances on Materials 61
Article 7.4 Change Order Compensation Adjustments 62
Article 7.5 Progress Payments 66
Article 7.6 Payment of Claimants 68
Article 7.7 Final Payment 69
Article 7.8 Correction of Work after Final Payment 69

SECTION 10.08 FORMS 70
Article 8.1 Current Forms 70
Article 8.2 Submittal Transmittal 70
Article 8.3 Request for Information Form 70
Article 8.4 Substitution Request Form 70
Article 8.5 Deviation Request Form 70

STANDARD GENERAL PROVISIONS
DIVISION 10

SECTION 10.01 DEFINITIONS

In these Contract Documents, the following words or expressions shall have the meaning given below:

AAC	Alaska Administrative Code (x AAC y where x=Title, y= Chapter)
AASHTO	American Association of State Highway and Transportation Officials
ACI	American Concrete Institute
ACS	Alaska Communications Systems
ADA	The Americans with Disabilities Act of 1990. Public Law 101-336, which prohibits discrimination on the basis of disability by private and public entities in places of public accommodation.
ADEC	State of Alaska, Department of Environmental Conservation
ADOT/PF	State of Alaska, Department of Transportation and Public Facilities
AMC	Anchorage Municipal Code (AMC x.y where x=Title, y=Chapter)
ANSI	American National Standards Institute
API	American Petroleum Institute
APWA	American Public Works Association
AS	Alaska Statute (AS x.y where x=Title, y=Chapter)
ASA	American Standard Association
ASTM	American Society for Testing and Materials
ATM	Alaska Traffic Manual
AWS	American Welding Society
AWWA	American Water Works Association
AWWU	Anchorage Water and Wastewater Utility
ENSTAR	Enstar Natural Gas Company
EPA	Environmental Protection Agency
GCI	General Communications Incorporated
M.A.S.S.	Municipality of Anchorage - Standard Specifications
ML&P	Municipal Light and Power
MUTCD	Manual of Uniform Traffic Control Devices
NEC	National Electrical Code
NEMA	National Electrical Manufacturer's Association
NESC	National Electrical Safety Code
NFS	Non-Frost Susceptible per Division 20 – Standard Construction Specifications for Earthwork
OSHA	Occupational Safety and Health Act or Administration

Addendum (Addenda) - Written or graphic communications issued prior to the execution of the Contract which modify or interpret the Bidding Documents and become part of the Contract Documents upon execution of the Contract.

Additional Work - Work not specifically provided for in the Contract as awarded, but which is consistent with the original scope of Work and a price for similar work is provided in the Contract.

Assembly - The Municipal Assembly of the Municipality of Anchorage.

Bid Proposal - The written proposal of the Bidder, on the form furnished, for the Work contemplated.

Bidder - Any individual, firm, partnership, corporation, or combination thereof formally submitting a Bid for the Work contemplated, and acting directly or through an authorized representative.

Bidding Documents - The Invitation to Bid, Special Provisions, Specifications, Forms, Schedules, Bidder's Checklist, proposed Contract Documents, and all Addenda.

Bid Guarantee - The security furnished by the Bidder as a guarantee to enter into a Contract for the Work contemplated if the Bidder is awarded the Contract.

Change Order Proposal - A written proposal prepared by the Contractor describing and documenting added costs or time extensions that the Contractor claims have been incurred due to unforeseen Work and other matters not contemplated or adequately provided for in the Contract Documents.

Change Order or Contract Amendment - A written agreement entered into between the Contractor and the Owner to amend the Contract Documents, or to otherwise provide for unforeseen Work and other matters not contemplated by or adequately provided for in the Contract Documents.

Cleanup – The restoration of all surface improvements including contouring; grading; required seeding and landscaping; all signage; removal of construction debris; restoration and cleaning of haul roads; and all other associated Work.

Contract - The four (4) page form agreement entitled "Contract" executed by the Contractor and then by the Owner on behalf of the Municipality. The Contract represents the entire and integrated agreement between the parties and supersedes all prior negotiations, representations, or agreements, either written or oral.

Contract Date - The date on which the Contract is executed by the Owner.

Contract Completion Date - The date specified in the Contract Documents for the full completion of all Work required by the Contract Documents, except as otherwise provided in the Contract.

If a number of calendar days is specified in the Contract Documents for the completion of the Contract, the Contract Completion Date shall be those specified number of days after the effective date of the Notice to Proceed, including authorized time extensions.

Contract Documents - The Contract and those documents described in the Contract. The Contract Documents can only be amended by written Change Order. Instructions, clarifications, and directives issued by the Engineer under Section 10.05, Article 5.1 - Authority of the Engineer are not Contract Documents.

Contract Item (Bid Item, Pay Item) - A specifically described unit of Work for which a price is provided in the Contract.

Contractor - The individual, firm, corporation, partnership, joint venture, limited liability corporation, or limited liability partnership, or authorized agent thereof, executing the Contract and performing the Work under the terms of the Contract Documents.

Days -

Calendar: Unless otherwise designated in the Special Provisions, days as used in the Contract Documents shall be understood to mean calendar days.

Working: A working day is defined as any day on which the Contractor is required to Work by the Contract Documents or any other day not otherwise defined herein as a non-working day.

Non Working: A non-working day is defined as Sunday, a recognized holiday, a day on which the Contractor is specifically required by the Special Provisions to suspend construction operations, or a day on which a suspension order is in effect. Recognized holidays shall be: New Year's Day, President's Day, Martin Luther King Day, Memorial Day, Independence Day, Labor Day, Veterans Day, Thanksgiving Day, and Christmas Day. When any of the above days falls on a Saturday, the preceding Friday shall be counted as a holiday. When any of the above days falls on a Sunday, the following Monday shall be counted as a holiday.

Deviation Request – A Contractor initiated request for a revision in the requirements of the Contract Documents.

Drawings - The maps, plans, sheets, or other graphic illustrations listed and referred to in the Contract.

Engineer - The Engineer identified in the Notice to Proceed as being the authorized agent and/or representative of the Owner.

Extra Work - Work not within the original scope of Work but is determined by the Engineer to be essential for the satisfactory completion of the Contract.

Final Acceptance Date - The date on which the Work has been constructed, inspected, and accepted pursuant to the provisions of Section 10.05, Article 5.26 - Final Inspection.

Furnish - Purchase and deliver to the Project.

Indicated - Shown on the Drawings, noted on Drawings, specified, or a combination thereof.

Inspector - The authorized agent and/or representative of the Engineer or Owner assigned to observe the Work.

Install - Set in place and make usable.

Liquidated Damages - The amount prescribed herein to be paid to the Owner, or to be deducted from any payments due or to become due the Contractor, for each calendar day's delay in completing the whole or any specified portion of the Work beyond the time allowed in the Contract or as extended by Change Order.

M.A.S.S. or MASS - Municipality of Anchorage Standard Specifications. Internal references to M.A.S.S. are in the form of Division, Section, Article, SubArticle.

Municipality or Anchorage - Municipality of Anchorage.

Necessary - Needed, as reasonably inferred from the Contract Documents, in order to make the Work complete and available for use.

Notice-to-Proceed - The written communication, issued by the Owner to the Contractor authorizing him to proceed with the Work, which identifies the Engineer and establishes the time of commencement and date of completion.

Notice-to-Resume - The written notice issued by the Engineer which terminates a period of suspension of Work, reinstates the counting of Contract time and requires the Contractor to resume Contract Work.

Or Equal - Whenever a material, article, or piece of equipment is identified on the Drawings or in the Project Manual by reference to manufacturers' or vendors' names, trade names, catalog numbers, etc., it is intended merely to establish a standard; and any material, article, or equipment of other manufacturers and vendors which in the opinion of the Engineer will perform in an equal or better manner the duties imposed by the general design shall be considered equally acceptable provided the material, article, or equipment so proposed will not require a change in the related Work.

Owner - The Department or Agency of the Municipality of Anchorage identified in the Contract. Owner does not include those Municipal employees, such as the Building Official or Fire Marshal and their staffs, who enforce certain building, health and safety, and fire codes.

Performance and Payment Bond - The form of security approved by the Municipality, furnished by the Contractor and his Surety guaranteeing the complete and faithful performance of all the obligations and conditions placed upon the Contractor by the Contract.

Product Data - Brochures, illustrations, diagrams, and other information furnished by the Contractor to illustrate a material, product, or system for some portion of the Work.

Project - The total construction of which the Work performed under the Contract Documents may be the whole or a part.

Project Manual - The bound documentary information organizing the documents into two general categories: (1) those describing the Bidding Documents, and (2) the Contract Documents.

Provide - Furnish and install; perform all Work necessary to complete the Work.

Purchasing Officer - That person within the Municipality of Anchorage who is vested under Anchorage Municipal Code with all authority pertaining to the procurement of supplies, services, and construction.

Request For Information (RFI) or Clarification – A written document prepared by the Contractor to request information or clarification of the Contract Documents. Each RFI shall be numbered consecutively and a log maintained of submittals and responses.

Samples - Physical examples which illustrate materials, equipment, or workmanship and establish standards by which the Work or a product will be judged.

Shop Drawings - All drawings, diagrams, illustrations, schedules, and other data which are prepared by the Contractor, a Subcontractor, manufacturer, supplier, or distributor which illustrate the equipment, material, or some portion of the Work.

Special Provisions - That portion of the Specifications entitled Special Provisions setting forth conditions or requirements unique to the Work.

Specifications - The directions, requirements, explanations, terms, and provisions pertaining to the Work.

Subcontractor - Any individual, firm, corporation, partnership, joint venture, limited liability corporation, or limited liability partnership, or authorized agent thereof, acting for or on behalf of the Contractor in the performance of a part of the Contract. This does not include those working for hire or suppliers of material or equipment.

Substantial Completion Date - The date upon which the Work required by the Contract has been inspected and in the opinion of the Engineer is essentially completed and available for the Owner's beneficial use for the purpose and in the manner intended by the Contract Documents, including satisfactory acceptance of all required testing .

Surety - The Company or Association which is bound with and for the Contractor for the acceptable performance of the Contract and for the payment of all obligations arising out of the Contract. Where applying to the Bid Guarantee, it refers to the Company or Association which shall forfeit the sum of the Guarantee when the Bidder fails to execute the Contract after the Bid is accepted by the Municipality.

Technical Specifications - Divisions 20 through 80 of MASS.

Time and Material Work - Work performed by the Contractor at the written direction of the Engineer for which no item is provided in the Contract and for which no unit price or lump sum basis can be agreed upon.

Utility Company - The entity (person, corporation, company, agency, or other) that furnishes service(s) (including petroleum and petroleum products, electricity, sanitary sewer, communications, water, natural gas, traffic signal control, and storm sewer) utilizing conduit, pipe, wire, cable, or other transmission lines.

Winter Suspension - The period of time through which no field work is accomplished due to adverse winter weather conditions as permitted by Section 10.05, Article 5.32 – Winter Suspension.

Work - The furnishing of all labor, materials, equipment, and other incidentals necessary or convenient for the successful completion of all the duties and obligations imposed by the Contract.

Working Titles – Working titles which may have masculine genders such as “workman” and “flagman” or are pronouns such as “he,” “his,” and “him” are utilized in the Contract Documents for the sake of brevity and are intended to refer to persons of either gender.

Written Notice - A written communication delivered in person to the individual or to a member of a firm, or agency, or to an officer of the corporation, or agency for whom it is intended, or sent by mail to the business address stated in the Contract Documents. Communication via electronic facsimile (FAX) or electronic mail shall not be considered proper written notice.

SECTION 10.02 BIDDING REQUIREMENTS AND CONDITIONS

Article 2.1 Examination of Bidding Documents and Site

The Bidder shall examine carefully the site of the proposed Work and the Bidding Documents before submitting a Bid. The submission of a Bid shall be an admission that the Bidder has made such examination and is satisfied as to the conditions to be encountered in performing the Work and as to the requirements and accuracy of the Bidding Documents. The Bidder further declares that the amount(s) bid are for the total Work as contained in the Contract Documents.

The Municipality assumes no responsibility for any understanding or representations concerning conditions made by any of its officers, agents, or employees prior to the execution of the Contract, unless such understanding or representations are expressly stated in the Bidding Documents or Addenda.

When soils boring data is provided by the Bidding Documents, the Bidder shall assume responsibility for any conclusions he may draw from such data. The Bidder shall be responsible for obtaining and analyzing such additional data as he may require and shall be responsible for conclusions drawn from that information.

By submitting a bid, the Contractor declares that he has carefully examined the Contract Documents, that he has full knowledge thereof and that he has investigated the site and satisfied as to the conditions affecting the Work, including, but not limited to those bearing upon transportation, disposal, handling and storage of materials, availability of labor, water, electrical power, roads, and uncertainties of weather, physical conditions at the site including all existing utilities, the conformation and conditions of the ground, the character of equipment and facilities needed preliminary to and during prosecution of the Work. The Contractor further declares that he is satisfied as to the character, quality and quantity of surface and subsurface materials or obstacles to be encountered insofar as this information is reasonably ascertainable from an inspection of the site, including all prior exploratory work, as well as from information presented by the Drawings and Specifications made a part of the Contract. Any failure by the Contractor to acquaint himself with the available information shall not relieve him from responsibility for estimating properly the difficulty or cost of successfully performing the Work.

The Bidder is encouraged to support the Municipality's Disadvantaged and Woman-Owned Business Enterprises (DBE/WBE) program. The Bidder shall comply with the DBE/WBE Specifications if included in the Contract. The Bidder shall comply with the requirements of the Equal Opportunity Special Provisions as contained in the Bid and resulting Contract.

Article 2.2 Interpretation or Correction of Bidding Documents

Bidders shall notify the Purchasing Officer promptly of any error, omission, or inconsistency that may be discovered during examination of the Bidding Documents and the proposed construction site. Requests from Bidders for interpretation or clarification of the Bidding Documents shall be made in writing to the Purchasing Officer and shall arrive at least seven (7) working days prior to the date for opening Bids. Oral questions may be presented at a pre-bid conference if one is provided for in the Bidding Documents.

Interpretations, corrections, or changes, if any, to the Bidding Documents shall be made by Addendum. Bidders shall not rely upon interpretations, corrections, and changes made in any other manner, including orally at the pre-bid conference. Interpretations, corrections, and changes shall not be binding unless included in an Addendum.

Article 2.3 Preparation and Submission of Bids

Bids shall be submitted on the forms furnished and must be manually signed. Bids should be submitted in a sealed envelope addressed as indicated in the Invitation to Bid and on which the Invitation Number is plainly marked.

Bidders must quote on all items, unless specifically allowed to bid on only a portion of the items within the Invitation to Bid and they are warned that failure to do so shall disqualify the Bid. The Bidder may bid an item at no cost and shall insert the words “no cost” in the space provided for any no cost item. When quotations on all items are not required, Bidders should insert the words ”no bid” in the space provided for any item where no quotation is made. If erasures or other changes appear on the forms, each such erasure or change must be initialed by the person signing the Bid.

Bids shall specify a unit or lump sum price, typed or written in ink, for each bid item called for. If the bid is submitted in both words and figures and there is a discrepancy between the written words and figures, the written words shall govern. In case of error in the extension of prices, the unit price shall govern. Bids may be rejected if they show any omissions, alteration of the forms, additions not required, conditional or alternate bids not required, qualified bids, or irregularities of any kind.

Article 2.4 Bid Guarantee

Each Bid shall be accompanied by a certified check, cashier’s check, or Bid Bond, in the amount of ten percent (10%) of the total amount of the Bid if the total amount of the bid is $100,000 or more, with good and sufficient corporate surety acceptable to the Municipality. If the total bid amount of the bid is less than $100,000, the bid shall be accompanied by a bid guarantee, in the form specified above, in the amount of $2,000,. Bid Guarantees for the three (3) low Bidders shall be held until the Contract is executed. All other Bid Guarantees will be returned within seven (7) days of the bid opening. Power-of-Attorney for the person signing the Bid Bond for the Surety must be submitted with the Bid Bond.

Article 2.5 Disadvantaged and Woman Owned Business Enterprises (DBE/WBE) Requirements

Each Bid shall be accompanied by those (DBE/WBE) Forms provided by the Purchasing Officer and as required by the bidder’s checklist. The Bidder shall comply with the Municipality of Anchorage Office of Equal Opportunity Disadvantaged Business Enterprise Program Specifications for Municipal Contracts, including submittal requirements for bids, prior to and after award. See the Disadvantaged and Women-Owned Business Enterprises (D/WBE) Specifications Section of the Invitation to Bid for participation goals for each particular project.

SECTION 10.03 AWARD AND EXECUTION OF CONTRACT

Article 3.1 General

The provisions of this Section are intended to be supplemental to, and not to replace AMC Title 7.

Article 3.2 Receipt and Opening of Bids

Bids shall be submitted to the Municipal Purchasing Department prior to the time of opening specified in the Invitation to Bid and the exact date and time of receipt of Bids shall be recorded. Late Bids shall not be considered, but will be held unopened until the time of award and then returned to the Bidder unless other disposition is requested or agreed to by the Bidder. Time of Bid receipt shall be determined by the time stamp of the Municipal Purchasing Department.

Facsimile bids shall not be considered. Modification by facsimile of bids already submitted shall be considered if received in writing by the Purchasing Officer prior to the time of bid opening fixed in the Invitation to Bid. Facsimile modifications shall not reveal the amount of the original or revised bid. Modifications shall state a plus or minus to the affected bid item.

No liability shall attach to the Municipality for the premature opening of or the failure to open a Bid not properly addressed and/or identified.

Bids may be withdrawn in person, by written letter, or by facsimile when such request is received by the Purchasing Officer PRIOR to the time specified for receipt of Bids.

If more than one Bid is offered by any one party, by or in the name of his clerk, partner, or other person, all such Bids shall be rejected. A party who has quoted prices to a Bidder is not thereby disqualified from quoting prices to other Bidders, or from submitting a Bid directly for the Work.

Article 3.3 Bidder Qualifications

All bidders shall hold a valid Alaska Contractor’s license per AS 08.18.

The Purchasing Officer reserves the right to determine whether or not a Bidder is a responsible Contractor. The Purchasing Officer may require the Bidder to submit such information as he may deem necessary to determine a bidder’s responsibility. Failure or refusal on behalf of the Bidder to submit the required information, in whole or in part, may be grounds for the Purchasing Officer to determine the Bidder as non-responsible.

Any determination that a Bidder is non-responsible shall be made by the Purchasing Officer using AMC 7.20.030 as the basis for that determination. Such determination shall be made in writing to the Bidder setting forth the reasons for such determination and the Bidder's right to request a review of this determination.

A Bidder's representations concerning his qualifications shall be construed as a covenant under the Contract. Should it appear that the Bidder has made a material misrepresentation, the Owner shall have the right to terminate the Contract for the Contractor's breach, and the Owner may then pursue such remedies as provided in the Contract Documents or as provided at law or equity.

If a Contractor has had a contract terminated by the Owner for cause as provided in Section 10.05, Article 5.28 – Termination of Contract by Owner, the Contractor may not be allowed to bid on the Owner's future contracts for a period of two (2) years. This two (2) year period shall commence from the date of the termination of the Contractor by the Owner.

Article 3.4 Action on Bids

The Municipality reserves the right to reject any and all Bids, and to waive any informalities and irregularities in Bidding or award of the Contract.

The Municipality may reject any bid which is unbalanced if it is in the best interest of the Municipality to do so. A bid is unbalanced when, in the opinion of the Purchasing Officer, it allocates a disproportionate share of costs or profit, or both, to the price of one (1) or more items of Work and reduces the share of costs or profit, or both, allocated to the price of another item or items of Work, and if there is a reasonable possibility that the bid will not result in the lowest overall cost of the Work to the Municipality.

Unless otherwise stated in the Bidding Documents, the Contract, if awarded, shall be awarded to the responsible Bidder who submits the lowest responsive Bid. When the Bidding Documents contain a basic bid and additive or deductive alternates, only the total of the basic bid and the alternates to be awarded shall be used to determine the low Bidder.

When the Bidding Documents contain a basic bid and additive alternates, the low Bidder shall be determined by the lowest combination of the basic bid and as many additive alternates as may be selected within the funds available. For evaluation purposes, additive alternates shall be chosen in the order listed in the Bid. The Purchasing Officer may bypass any additive alternate whose selection would cause the Contract to exceed the funds available.

When the Bidding Documents contain deductive alternates and the Purchasing Officer determines that including any or all of the deductive alternative is in the best interest of the Municipality, the lowest bid for each Bidder shall be calculated by deducting the value of applicable alternates from the basic bid. The Purchasing Officer may bypass any deductive alternate to maximize the use of available funds.

The Purchasing Officer shall use the list of priorities in the bid schedule to determine the low bidder only. After determining the low bidder, an award may be made on any combination of bid items provided: (1) it is in the best interest of the Municipality; (2) funds are available at the time of award; and (3) the low bidder’s price for the combination to be awarded is less than the price offered by any other responsive, responsible bidder.

The amount of the Contract shall be the total sum of the amounts computed from the estimated quantities and unit prices and/or the lump sum awarded by the Purchasing Officer and specified in the Contract.

Unless otherwise specified in the Invitation to Bid, Notice of Award or rejection shall be given within forty-five (45) days of Bid opening. The notice shall be in writing and signed by the Purchasing Officer or authorized designee. A Notice of Award shall constitute an acceptance of the Bid. No other act(s) of the Municipality or its representatives shall constitute an acceptance of a Bid. The acceptance of a Bid shall bind the successful Bidder to execute the Contract.

Article 3.5 Bonds, Insurance, EEO and DBE/WBE Forms

The successful Bidder shall furnish the Purchasing Officer a Performance and Payment Bond in the full amount of the Contract. The Bond is for the faithful performance of the Contract in all respects including, but not limited to, payment for all materials and labor. All alterations, extensions of time, additional Work and other changes authorized by the Contract Documents may be, at the option of the Owner, made without securing the consent of the Surety or Sureties. Contractor shall provide the Bond with a good and sufficient corporate surety acceptable to the Municipality. A Power-of-Attorney for the person signing the Bond for the Surety must be submitted with the Bond.

The successful Bidder shall furnish the Purchasing Officer a certificate of insurance pursuant to the provisions of Section 10.06, Article 6.9 – Insurance, and shall execute and furnish the Purchasing Officer all the required EEO and DBE/WBE forms.

The Bidder shall exercise positive efforts to comply with the Equal Employment Opportunity and Disadvantaged/Woman Owned Business Enterprise requirement policies of the Municipality. The Bidder shall familiarize himself with the Equal Opportunity Special Provisions and Disadvantaged/Woman Owned Business Enterprise Specifications for Municipal Contracts, including submittal requirements for bids, prior to award and after award.

Article 3.6 Execution of Contract

The successful Bidder shall execute the Contract and furnish the required bonding and insurance within five (5) working days after Notice of Award of the Contract is issued.

The Contract shall be considered executed by the successful Bidder when two (2) copies of the Contract, signed by an authorized representative of the Contractor, and the required bond and insurance certificate are received by the Purchasing Officer. Failure or neglect of the Contractor to execute the Contract within the time specified may result in a forfeiture of the Bid Guarantee and award of the Contract to the next lowest Bidder.

The Owner shall execute the Contract within ten (10) working days after execution by the Contractor as set forth above. The date the Contract is executed by the Owner is the Contract Date. The rights and obligations provided for in the Contract shall become effective and binding upon the parties as of the Contract Date.

The Contractor shall be supplied upon request with twelve (12) sets of the Contract Documents exclusive of M.A.S.S. The Contractor may obtain any additional documents from the Engineer by compensating the Owner for the cost of the printing involved.

The Notice-to-Proceed shall be issued within seven (7) working days after the Contract Date unless otherwise specified in the Special Provisions. The effective date of the Notice to Proceed shall be within ten (10) working days of the Contract Date. The Engineer or his authorized representative, the Engineer's address, and the completion date shall be designated in the Notice-to-Proceed.

Article 3.7 Contractor's Warranty

The Contractor shall warranty all materials and workmanship for one (1) year from the Final Acceptance Date unless otherwise specified in the Special Provisions. This warranty shall require the Contractor to remedy promptly, without cost to the Owner, any and all defects in material and workmanship including any consequential damages resulting from defective materials or workmanship.

All warranty Work shall be subject to the same Contract provisions, including materials, quality of work, authority of the Engineer and inspection, as provided for in the original Work. All warranty Work shall be at the sole expense of the Contractor. All materials and workmanship directly or indirectly involved in repairs or replacements under this Article shall carry an extended warranty of not less than one (1) year from the date of the Engineer’s written acceptance of the repair or replacement Work, or through the warranty period for the original project Work, whichever is longer.

If the defect, in the opinion of the Engineer, is of such nature as to demand immediate repair, the Owner shall have the right to take corrective action and the cost thereof shall be borne by the Contractor.

If the Contract includes Work in different geographic locations, then the Work in each location may be accepted and the warranty period for that location may begin independent of the completion of the Work in the other locations.

The Warranty shall run concurrently with the Plant Establishment Period for landscaping Work pursuant to Division 75 – Landscaping Improvements unless otherwise specified by the Engineer in writing.

At the completion of the Warranty and Plant Establishment Periods, the Contractor and Owner shall conduct a pre-Warranty Inspection. All deficiencies indicated by the pre-Warranty Inspection shall be listed and promptly furnished to the Contractor for action. When all listed deficiencies have been corrected, the Contractor shall notify the Engineer and a final Warranty Inspection will be performed. When the Warranty Inspection verifies correction of any listed deficiencies, the Engineer shall issue a Certificate of Completion.

SECTION 10.04 SCOPE OF WORK

Article 4.1 Intent of the Contract Documents

The intent of the Contract Documents is to provide for the execution and completion of the Work in its entirety. Except as otherwise specifically provided herein, the Contractor shall furnish all permits, transportation, handling, storage of materials, labor, tools, implements, machinery, supplies, materials, water, heat, utilities, and incidentals, and shall do all things necessary to perform and to complete the Work.

When words that have a common technical or trade meaning are used to describe Work, materials, or equipment, such words shall be interpreted in accordance with that meaning.

Reference to Standard Specifications, manuals, or codes of any technical society, organization, or association, or to the Laws or Regulations of any governmental authority, whether such reference be specific or by implication, shall mean the latest Standard Specification, manual, code or Laws or Regulations in effect at the time of opening of Bids, except as may be otherwise specifically stated.

However, no provisions of any referenced Standard Specification, manual or code (whether or not specifically incorporated by reference in the Contract Documents) shall be effective to change the respective duties and responsibilities of the Owner, the Contractor, or the Engineer nor any of their consultants, agents, or employees from those set forth in the Contract Documents.

With reference to Drawings, the order of precedence is as follows:

1. Figures (numerals) govern over scaled dimensions.

2. Detailed Drawings govern over general Drawings or Standard Details.

Article 4.2 Interpretation of Contract, Specifications, and Drawings

The Contract Documents are intended to be complementary and to describe and provide for a complete description of the entire scope of Work. A requirement occurring in one Section of the Contract Documents is as binding as though occurring in all.

In cases of conflict in the requirements of the Contract Documents such conflict shall be reconciled by the acceptance of the following order of precedence for the various Contract Documents: (1) the Contract; (2) the Bid; (3) Special Provisions; (4) the Technical Specifications; (5) the Drawings; (6) the Standard General Provisions; and (7) specifications incorporated by reference in any of the above.

The apparent silence of the Specifications and Drawings as to any detail or the apparent omission from them of a detailed description concerning any point, shall be regarded as meaning that only the best general practice is to prevail and that only approved material and workmanship of first quality are to be used.

The Contractor shall carefully study and compare the Contract Documents and shall at once report to the Engineer any error, inconsistency or omission he may discover including any requirement which may be contrary to any law, ordinance, rule, regulation, or order of any public authority bearing on the performance of the Work.

The Contractor shall take no advantage of any errors or omissions in the Specifications and Drawings or of any discrepancies in or between same. Work knowingly performed by the Contractor as a result of an error or omission in the Drawings and/or Specifications where such error or omission is not called to the attention of the Engineer shall be at the Contractor's risk and expense.

All Contractor-initiated requests for interpretation or clarification of the Contract Documents shall be accompanied by a completed Request For Information (RFI) form. Each request shall clearly and completely state the basis for lack of clarity in the Contract Documents and shall refer to the applicable Specifications, Drawings and details that give rise to the request. If not provided in the Contract Documents, a copy of the RFI form shall be obtained from the Engineer. Engineer shall respond to the RFI in writing within ten (10) working days. The Engineer's response shall serve to clarify and interpret the existing Contract requirements and shall not be construed as requiring or directing a change in the Work.

Article 4.3 Submittal List

The Contractor shall complete, submit, and/or comply with all requirements as indicated in the Submittal List located in the Bidding Documents. The Contractor is hereby advised the Submittal List is not an all-inclusive document. The Submittal List does not relieve the Contractor from his obligation to comply with all submittals, certifications, or other requirements as specified in M.A.S.S., the Special Provisions, or the Drawings. The Contractor is responsible to determine that all submittals, certifications, and/or requirements are met, whether or not specifically addressed in the Submittal List.

Article 4.4 Estimates of Quantities

The quantities shown in the Bid, whether for a unit price contract or a combination of a lump sum contract and unit price contract, are approximate only and are not to be taken to be either representations or warranties. Since quantities in the Contract Documents are estimates only, actual quantities may increase or decrease without constituting a change in the Work unless the increase or decrease involves a major bid item which varies by more than twenty-five percent (25%) as provided below. The cumulative variations in quantities together with other changes in the Work shall not increase the Contract amount by more than the limits set forth in AMC 7.15.080, without Assembly approval.

Article 4.5 Increased Quantities

The Owner reserves the right to increase the quantity of any bid item. There may be an adjustment of unit prices of major bid items where the actual quantity of the item is increased by more than twenty-five percent (25%) of the estimated quantity. A major bid item is defined as any item where the total bid price of the item exceeds twice the average

bid price of an item. Twice the average bid price of an item is calculated by the following formula:

$$\frac{T}{I} \times 2$$

where "T" equals total bid amount of the schedule in which the item appears and "I" equals the number of items in the schedule in which the item appears.

If a major bid item quantity increases by more than twenty-five percent (25%), the unit price for one hundred and twenty-five percent (125%) of the estimated quantity shall remain as set forth in the Bid and the price for additional quantities above the one hundred and twenty-five percent (125%) for said item may be negotiated for a greater or lesser amount upon the demand of either the Owner or the Contractor.

A unit price increase may be allowed only if the Contractor can substantiate to the satisfaction of the Engineer that he incurred increased unit costs in providing the additive quantities over and above that unit cost incurred in providing the estimated quantity of the bid item. A negotiated increase in price may include a maximum of ten percent (10%) for overhead and profit on increased costs.

A negotiated increase in price on any item shall not preclude a claim for increased costs on other items of the Work under Section 10.05, Article 5.21 - Claims for Additional Compensation.

A decrease in unit price for that quantity over one hundred and twenty-five percent (125%) of the estimated quantity shall be allowed only if the Owner establishes that the unit cost for such additional quantities is less than the unit cost for the estimated quantity. For this purpose, the Contractor shall provide job records as required by the Engineer.

Article 4.6 Decreased Quantities

The Owner reserves the right to decrease the quantity of any Bid item. There may be an adjustment of unit prices of major Bid items where the actual quantity of the item is decreased by more than twenty-five percent (25%) of the estimated quantity and the aggregate total of all quantity revisions decreases the total Contract amount by more than ten percent (10%). Change orders for extra Work shall not be used for this calculation. A major bid item is defined in Article 4.5 - Increased Quantities.

If a major bid item qualifies for a unit price adjustment, the Contractor shall be allowed, upon proper submittals, an allowance for overhead costs for the decreased quantity. The allowance shall be ten percent (10%) of the amount represented by the difference between the actually installed quantities and seventy-five percent (75%) of the Contract estimated quantities. Payment of this allowance does not preclude a claim for increased costs on other items of the Work under Section 10.05, Article 5.21 - Claims for Additional Compensation.

The provisions of this Article shall not apply to reduced quantities resulting from the termination, or partial termination, of the Contract for cause or for the Owner's convenience.

Article 4.7 Reference Stakes and Surveying

Bench Marks and/or reference points have been identified and/or placed initially by the Engineer, and the horizontal and vertical reference locations are indicated in the Drawings. The Contractor shall ensure that all construction surveying Work required is completed in strict conformity with Division 65 - Standard Construction Specifications for Construction Survey.

At various points throughout the Work, Contractor's operations may disturb existing survey monuments, bench marks, or referenced points. If Contractor disturbs these items, Contractor shall replace them at Contractor's expense. Contractor shall replace at Contractor's expense, survey monuments, bench marks, or reference points which, in the judgment of the Engineer, are outside the limits of the Work area and which are disturbed or destroyed by Contractor.

Article 4.8 Work Incidental to the Contract

Several items of Work, not covered in the Bid Proposal, are incidental to the cost of the Contract. These items shall include, but are not limited to, the following:

1. Type 1 Storm Water Pollution Plan
2. Utility location and verification.
3. Shoring utility and power poles, and protecting overhead and underground utilities.
4. Removal and replacement of concrete barriers.
5. Providing safe hauling routes for transporting excavation material, classified fill, other construction materials, and site access.
6. Dewatering of roadway excavation and pipe trenches, unless payment is provided elsewhere.
7. Resetting disturbed property corners or monuments.
8. Removal and reinstallation of manholes and catch basins unless identified as a bid item. Removal and replacement of storm drain and subdrain pipes and cleanouts unless identified as a bid item.
9. Removal and delivery of salvaged electrical equipment.
10. Furnishing and installing bonding and grounding conductors for electrical installations.
11. Post-construction cleanup.
12. Reimbursement to utilities for associated inspection or relocation.
13. Other items indicated on the Drawings or in these Specifications.

Article 4.9 Disposal Sites

Except as otherwise stated in the Special Provisions, the Contractor shall make his own arrangements, assume all costs, and obtain all necessary permits in connection with disposal sites. Contractor shall furnish a disposal site for trees, brush, outsized boulders, and other objectionable debris or materials. Contractor shall dispose unusable excavation, unsuitable or surplus material at either the Anchorage Regional Landfill off Hiland Road or at a lawful, permitted disposal site furnished by Contractor and approved by Owner. The Anchorage Regional Landfill shall charge the current disposal fee for unusable excavation or any material containing stumps, brush, or other construction debris or materials. Contractor-furnished disposal sites shall conform to AMC 23.105 Grading, Excavation, and Fill.

Disposal sites shall be located and maintained in such a manner as to prevent a public nuisance.

When the Contractor makes proper arrangements for disposal on private property, he shall obtain written permission from the property owner or owners for such disposal sites and shall furnish the Engineer with a copy of this permission and the appropriate Municipal Permit for grading and/or fill. The written permission shall specifically provide that the property owner shall not hold the Municipality, its employees, agents, or consultants liable for use of or damage to this property. The Contractor shall be held liable for any trespass and/or property damage incurred outside of the disposal site.

Waste Disposal. Prior to construction, the Contractor shall submit a description of his plan for disposing of unsuitable materials and waste resulting from the Work under the Contract. If any material is disposed of in unauthorized areas, the Contractor shall remove the material and restore the area to the condition of the adjacent undisturbed areas at no cost to the Owner.

Article 4.10 Protection of Persons, Property and Environment

The Contractor shall be responsible for initiating, supervising, and maintaining all safety programs and precautions in a manner to prevent damage, injury, or loss to the Work employees, site visitors, the public, the environment, and property. These safety requirements are applicable to the Work whether on-site or off the site for Work under the control, custody, or care of the Contractor. These responsibilities apply to all adjacent sites and their improvements including landscaping, walks, roadways, structures, utilities and drainageways. If the Contractor encounters material on the site that may be reasonably identified as asbestos-containing material (ACM), polychlorinated biphenyl (PCB), or other hazardous materials not requiring abatement as part of the Work, the Contractor shall stop the Work immediately in the affected area and notify the Owner's Representative and Owner in writing. The Work shall not be resumed in the affected area until a final determination has been made by the Engineer on the status of the material in question.

Until Contract completion, the Contractor shall be solely and continuously responsible, twenty-four (24) hours per day, seven (7) days per week, for the safety measures outlined in this Article, including, but not limited to, the following:

(a) Erecting and maintaining, as required by existing conditions and progress of Work, all safeguards for safety and protection, including barricades, danger signs, traffic control devices, and other warnings against hazards.

(b) Providing reasonable access at all times for emergency units such as the Anchorage Police Department, the Anchorage Fire Department, and the Anchorage Fire Department's Hazardous Materials Response Team.

During periods of suspension of Work, refer to Section 10.05, Article 5.24 – Suspension of Work and Article 5.32 – Winter Suspension, for areas of responsibilities.

Protection of Water Resources. The Contractor shall control the disposal of fuels, oils, bitumens, calcium chloride, acid, or any other harmful materials, both on and off the premises, and shall comply with applicable federal, state, and municipal laws concerning pollution of waterways while performing Work under the Contract. Special measures shall be taken to prevent chemicals, fuels, oils, greases, bituminous materials, and sewage from entering established drainages.

Article 4.11 Private Property in Right-of-Way

Unless otherwise specified in the Drawings and/or Specifications, the Engineer shall contact the property owner to remove any fences, trailers, sheds, machinery, or other miscellaneous personal property is located within the right-of-way, and/or utility easements which interferes with construction. If the property owner cannot be contacted or does not move the item(s) of personal property, the Engineer shall notify the Contractor, in writing, to remove the item(s) from the right-of-way to the property owner's lot or as otherwise directed by the Engineer. When removing personal property from the right-of-way, the Contractor shall take care not to damage the items. Any damage to the item(s) shall be repaired or the items replaced in kind by the Contractor at no cost to the Municipality.

Unless otherwise stated in the Drawings and/or Specifications, payment for the removal of personal property from the right-of-way and the setting of these items down on the owner's lot shall be an incidental item and no separate payment shall be made.

Payment for Work such as resetting fences or restoration of personal property items to their original or alternate locations shall be specified in the Drawings and/or Specifications. If payment for such Work is not otherwise specified in the Drawings and/or Specifications, such Work shall be considered incidental to the Contract unless otherwise negotiated with the Engineer.

Article 4.12 Public Convenience and Access

The Contractor shall conduct the Work in such a manner as to cause minimum inconvenience to pedestrians and vehicular traffic and to persons conducting commercial

enterprises or residing along the route of Work. Without prior approval of the Engineer, entrances or driveways of all kinds shall not be blocked for more than three (3) hours. Temporary pedestrian bridges, ramps, or culverts shall be provided and maintained at entrances and shall be adequate in width and strength for the service required. All Work involved in providing for construction, maintenance, and use of entrances and driveways is the responsibility of the Contractor and shall not be paid for separately and shall be considered incidental to the lump sum and/or unit prices contained in the Contract Documents

The Contractor shall comply with this Article at all times. Under no circumstances shall the public be denied access to the adjoining lots unless proper notification to the property owners and/or tenants has been provided and an alternate access has been provided and approved by the Engineer. The Contractor shall provide the property owners and/or tenants written notification no less than forty-eight (48) hours prior to any closure of access.

The Contractor shall, prior to the commencement of Work, submit any written agreements between the Contractor and property owners regarding access and use of private property within the project limits for any purposes associated with this Project. Any such agreements shall indemnify the Municipality from any and all actions that result from activities of the Contractor.

The Contractor shall conduct his Work to insure that there is no disruption of mail service, school bus service as applicable, trash collection, access by emergency vehicles, or any unnecessary disruption of general access to any business or private residence.

If the Contractor's Work is delayed because of any construction and/or transportation activities of nearby construction, regardless of whether authorized by the Owner, the Contractor shall not be entitled to additional compensation from the Owner. The Contractor may be entitled to an extension of time to the extent that such delay was unavoidable through reasonable efforts on the Contractor's part. Except as to a possible entitlement to such an extension of time, the Contractor shall hold harmless, defend, and indemnify the Owner from and against any and all claims, damages, losses, and/or expenses, including attorney's fees, by the Contractor or third-parties, arising directly or indirectly as a result of nearby construction and/or transportation impacts.

Article 4.13 Traffic Control Plan

The Contractor shall conduct his operations to minimize interference to vehicular traffic. The Contractor shall submit a Traffic Control Plan (TCP) showing street closures, partial closures, detours, and all pertinent traffic control. The Contractor's TCP shall be reviewed by the Traffic Engineer and then submitted for approval to Development Services. Emergency units shall be provided vehicular access at all times. Construction operations involving a closure of an arterial street shall not commence until after 9:00 a.m. unless otherwise approved by the Traffic Engineer. Requests for arterial street closures shall be made sufficiently in advance of the planned closure to allow a minimum of seventy-two (72) hour advance notice to the public.

When a street closure or partial closure is approved, the Contractor shall provide and maintain adequate detour routes, either by appropriately signing existing streets or by the construction of temporary roadways. Detour routes using existing streets must be left in a condition at least equal to their condition immediately prior to use as a detour. The Contractor shall be responsible to provide, erect, and maintain barricades, fences, signs, flags, lights, flagmen, and any other devices necessary to insure traffic safety. Placement and design of signs, barricades, and other devices to be furnished and used by the Contractor shall conform with the standards specified in the latest edition of the Manual on Uniform Traffic Control Devices (MUTCD). Traffic signs no longer required shall be promptly removed. Where operations are performed in stages, only those devices necessary to the stage in progress shall be visible. It shall be the Contractor's responsibility to maintain all barricades, signs, and lights throughout the night hours, weekends, holidays, or other periods of inactivity. Should the Contractor fail in this maintenance obligation, the Owner may erect the necessary barricades, signs, and lights, and deduct the cost thereof from payments due the Contractor. Action by the Owner to erect barricades, signs, or lights does not relieve the Contractor's indemnification obligations set forth in Section 10.06, Article 6.10 - Indemnification.

The Municipal Traffic Department shall require a minimum of three (3) days for TCP review time for streets with the following classification:

1. Minor arterials and higher must be submitted at least ten (10) days prior to the scheduled closure (three (3) day review time, seven (7) day advertisement/public notice time).

2. Streets listed as collectors must be submitted no later than six (6) days prior (three (3) day review time, three (3) day advertisement/public notice time).

3. All other streets must be submitted no later than three (3) days prior (three day (3) day review time, no advertisement/public notice required).

The TCP shall conform to the standards in the latest edition of Part VI of the Manual of Uniform Traffic Control Devices (MUTCD), and shall also conform to the requirements in the latest edition and supplements of the Alaska Traffic Manual (ATM) prepared by the Alaska Department of Transportation and Public Facilities. When a conflict exists between M.A.S.S. and the ATM, the requirements of Specifications or any Special Provisions shall govern.

If Work shall be done within a State of Alaska right-of-way as identified in the Special Provisions, the TCP shall also be submitted to the State of Alaska, Department of Transportation and Public Facilities Regional Traffic Engineer for acceptance and approval.

Providing the TCP to the Engineer and the State of Alaska Department of Transportation and Public Facilities Regional Traffic Engineer shall be the responsibility of the Contractor and shall be paid for under the bid item "Traffic Maintenance" and no separate payment shall be made.

When, in the opinion of the Engineer, traffic maintenance is deficient, inadequate, improper, or conditions exist such that public safety would be adversely affected, or public convenience unnecessarily degraded, the Contractor shall be notified in writing by the Engineer. Such notification shall be accompanied by a statement of the corrective action to be taken. If the Contractor fails to promptly comply with such instruction, the Engineer may suspend any or all Work on the project until satisfactory, corrective action is taken. If the Contractor fails to take such prompt action, the Engineer shall order such Work, as deemed necessary to ensure public safety and/or to enhance the public convenience, to be accomplished by an Owner-selected workforce. The cost of this Work shall be deducted from monies otherwise due the Contractor.

Article 4.14 Maintenance and Drainage

The Contractor shall maintain all detour routes, haul routes, streets under construction, and all ditches, water courses, existing drainage patterns, siltation control, gutters, sidewalks, walkways and bike trails affected by the Work until the Final Acceptance Date. This includes, but is not limited to, shaping, grading, and dust control. The Contractor shall maintain existing drainage patterns disturbed or utilized by construction, including re-establishment of drainage ditches, swales and gutter flowlines to their preconstruction condition, grade, and elevation.

When cleaning paved streets, curb and gutters, alleys, and sidewalks, the Contractor shall not flush the streets using only water, but shall use such methods as established by the Director of Health and Human Services for sweeping operations. The Contractor shall prevent any spillage from entering any storm drains.

All streets, drainage ditches, swales, water courses, gutters, sidewalks, walkways and bike trails, used by the Contractor or interrupted by his Work, shall be restored to their pre-existing condition. The Contractor shall construct and maintain any drainage and siltation control necessary to accommodate water caused by his pumping or dewatering operations, and shall contain the water to prevent inconvenience to pedestrian and vehicular traffic.

Contractor shall repair or replace catch basins, storm drain manholes, or storm drains damaged during construction as an incidental item of construction at no additional cost to the Owner.

All costs associated with maintenance of drainage patterns and repair or replacement of drainage ditches, swales, catch basins, storm drains, gutter flowlines, and any other drainage appurtenances shall be incidental to the Contract or to the item under construction, and no separate payment shall be made.

For dust and mud control, the Contractor shall maintain all excavations, embankments, stockpiles, access roads, waste areas, borrow areas, and all other Work areas free from excess dust and mud to avoid causing a hazard or nuisance to others.

The Contractor shall provide water or other dust palliatives and appropriate distribution equipment as required for dust control on their haul roads and Work areas. The Contractor

shall assure that all loose material and debris has been removed from haul vehicles prior to their leaving or entering the site to minimize spills of material on road surfaces.

All existing paved areas and roadways adjacent to the project construction site or used as haul roads, shall be kept clean of dirt, mud, and debris resulting from the Contractor's Work during the construction period.

Article 4.15 Temporary Erosion Control and Storm Water Pollution Prevention Plans for Construction

Contractor shall provide all erosion and sediment control measures and best management practices necessary for the prevention of water pollution, erosion, and/or siltation. These measures are for the protection of streams, lakes, ponds, wetlands and tidal waters in compliance with Anchorage Municipal Code, without regard to the size of the Project.

Contractor shall comply with all the requirements set forth in Alaska Administrative Code, 18 AAC 70, and Anchorage Municipal Code Title 21. The Anchorage Municipal Code provides for a fine to be levied for each day of non-compliance.

Unless an erosion and sediment control plan is specifically identified and included in the Drawings or other Contract Documents, Contractor shall provide a Storm Water Pollution Prevention Plan (SWPPP) describing measures and best management practices to be employed during construction. The SWPPP shall meet the requirements of the Municipality's Storm Water Treatment Plan Guidance Review Manual and shall be one of three types:

Type 1 SWPPP	Projects that disturb less than ten thousand (10,000) square feet but that either disturb more than five hundred (500) square feet or are deeper than four feet (4') or both
Type 2 SWPPP	projects that disturb between ten thousand (10,000) square feet to one (1) acre
Type 3 SWPPP	projects that disturb one or more acre

Type 1, 2 and 3 SWPPPs are described in Division 20, Section 20.02 – Storm Water Pollution Prevention Plan.

Contractor shall implement the erosion and sediment control measures immediately after Contractor mobilization and before commencing any clearing, grubbing, excavation, pavement removal, or other operations or activities which may result in erosion or siltation.

Erosion and sediment control measures and best management practices include such items as silt fences, sedimentation ponds, intercepting embankments and channels, check dams, rock lining, mulching, jute matting, seeding, sodding, and other erosion control devices and practices as required. In order to prevent erosion or siltation, clearing, grubbing, grading, filling and other operations shall be scheduled and performed such that permanent erosion control measures follow immediately. Permanent erosion and sediment control measures are those Work items specified elsewhere in the Contract Documents

which are intended to provide permanent erosion control such as paving, seeding and other measures and practices as required.

Erosion and sediment control measures shall remain in place and in good functioning or working condition until Work is complete under the Contract and final stabilization of the permanent erosion and sediment control measures is achieved and accepted by the Engineer. The continued maintenance of these erosion and sediment control items and replacement of damaged items shall be the ongoing responsibility of the Contractor.

The Engineer may suspend Work pursuant to Section 10.05, Article 5.24 – Suspension of Work if the Contractor fails to fully carry out the requirements of the erosion and sediment control plan. After suspension of the Work, the Owner may perform or contract the performance of the erosion and sediment control measures and deduct those costs from the Contractor's progress payments.

Payment for a Type 1 SWPPP is incidental to the Contract and no separate payment shall be made. Pay items for Type 2 and Type 3 SWPPPs are found in Division 20, Section 20.02 – Storm Water Pollution Prevention Plan.

Article 4.16 Temporary Utilities

The Contractor shall provide and pay all costs for temporary utilities including gas, water, sanitary sewer, telephone, and electricity necessary to perform the Work. The Contractor shall pay for these costs during periods of suspensions of Work. The Owner does not represent that utility service is available to the site.

The Contractor shall provide temporary heat, including fuel and power, as required to protect materials and Work from the elements. The Contractor shall provide and maintain temporary toilets and shall furnish drinking water for all those connected with the Work.

Article 4.17 Utilities

Locations of utilities shown on the Drawings are not exact. Above-ground utilities have been field located. Below-ground utilities are shown as depicted on record documents prepared by others and these documents are not necessarily As-Builts; therefore, the depicted locations may not be exact or complete and the Contractor is cautioned to approach his Work accordingly. The Owner shall not be held liable for damages to utilities incurred during construction, including lost time and/or associated costs, due to deficiencies or omissions on the Drawings or these Specifications. At least forty-eight (48) hours prior to commencing Work, the Contractor shall contact all local utility companies to obtain underground utility locates. The Contractor shall exert due care to prevent damage to utilities. Should a utility be damaged, the Contractor shall immediately notify the utility company and shall have the damage repaired at no cost to the Owner. It is expressly understood that the utility has the right to do Work or have its contractor do Work in connection with making repairs to the utility lines damaged by the Contractor. If any utility company determines that a utility has to be temporarily raised, lowered, moved, guyed, shore, braced, or otherwise protected during construction, it shall be done at the expense of the Contractor and to the satisfaction of the utility company.

The Contractor shall be responsible for maintaining all utility service connections whether marked on the Drawings or not. In addition, the Contractor shall repair or replace all utility service connections (at his own cost) that are damaged by his actions.

At a sufficient distance, prior to encountering a known obstacle or tie-in to an existing conduit, pipe or manhole, the Contractor shall expose and verify the exact location of the obstacle, pipe, or manhole so that proper alignment and/or grade may be determined before the pipe sections are laid in the trench and backfilled. The Contractor shall notify the Engineer of the results of this verification, prior to commencement of the Work affected by results of verification, so that any modification to the Drawings or supplementary instructions may be supplied to the Contractor. The Contractor shall allow the Engineer one complete working day to review the verification results and provide any design modifications or supplementary instructions necessary. No additional payment shall be made to the Contractor for this Work.

The cost incurred for removal and alignment of backfilled pipe sections due to improper verification methods shall be borne by the Contractor.

Unless otherwise specified in the Special Provisions, it is the intent of the Contract Documents that utilities shall not be relocated to facilitate construction. If the Engineer determines that an existing utility must be permanently relocated because it is in direct conflict with the facility being constructed, the existing utility shall be relocated by the Utility Company at no charge to the Contractor. In the event a water or sewer service is relocated, it shall be installed in compliance with the minimum separation distances set forth in 18 AAC 80.

The Contractor shall be responsible for coordinating the Work with any Work of a Utility Company and shall not interfere with the initial installation, relocation, reconstruction, or replacement of any utility including the making of necessary service connections by the utility company. If the Work of the Contractor is delayed because of any acts or omissions of the utility company, the Contractor shall not be entitled to additional compensation from the Owner but may be entitled to an extension of time.

The Contractor is required by Municipal ordinance to request locates from the Locate Call Center (278-3121) a minimum of forty-eight (48) hours prior to any excavation.

No buried utility shall be covered until its owner has inspected and accepted it.

Certain utility companies may have facilities within the project limits and some or all of those utility companies may be relocating their facilities and installing crossings within the project limits throughout the project duration.

A. Trash

Contractor shall coordinate trash pick-up for local residents affected by the construction Work with the solid waste utility.

B. Water and Wastewater

All existing key boxes, cleanouts, manholes, etc. shall be located and exposed by the Contractor and carefully protected during the course of the Work. The Contractor, in conjunction with the Engineer, shall check all utilities prior to the start of the construction and record their condition. All manholes, catch basins, cleanouts, etc. shall be checked for damage resulting from the Contractor's operation prior to final acceptance by the Owner. The Contractor is responsible for restoring all existing utilities to preexisting conditions, and shall coordinate with the affected utility in having any necessary repairs completed.

Contractor shall schedule a walk-through of the project with AWWU Engineering Division and check the existing condition prior to street reconstruction of sanitary sewer manholes, cleanouts and services, and water mainline valves, keyboxes, services, and hydrants. If adjustments are made to AWWU water or sanitary sewer facilities, the Contractor shall schedule and complete a final acceptance walk-through inspection of said facilities with AWWU prior to scheduling this project's prefinal inspection, provide a Record Drawing, and list any new facility components.

The Contractor shall schedule and be responsible for obtaining all required AWWU permits and shall notify AWWU of any change in status or condition of existing water and/or wastewater infrastructure. In the event water service may be interrupted during the course of construction, the Contractor shall adhere to the requirements of AWWU Policy and Procedures, No. 15-4, Customer Notification for Scheduled or Emergency Water Service Outages.

C. Gas

ENSTAR Natural Gas Company's natural gas pipelines shall have continuous support during excavation and backfill in accordance with ENSTAR's *Safety Requirements for Excavation Adjacent to Natural Gas Pipeline*. Contractor shall exercise extreme caution during excavation and backfill operations to prevent damage to the pipe and pipe coating. Contractor shall place at least twelve inches (12") of classified fill and backfill and compact below exposed gas pipelines, in accordance with Division 20, Section 20.21 - Classified Fill and Backfill.

The Contractor shall call ENSTAR to perform a cathodic protection area sweep after all underground Work (including electrical tie-in work) has been completed and before surface restoration or paving begins. The Contractor shall notify ENSTAR two (2) working days before the sweep is to be performed. The Contractor shall allow time for repairs in the event that underground contacts are detected.

Contractor shall furnish ENSTAR a copy of the construction schedule for Work within the vicinity of gas mains, and shall accommodate ENSTAR's authorized inspectors per Section 10.05, Article 5.14 – Inspection.

D. Electrical and Telecommunications

The Contractor shall accomplish all Work in close proximity to electrical or telecommunications facilities in conformance with clearance requirements in

accordance with the latest edition of the National Electrical Safety Code (NESC) and the established codes and guidelines of the affected utilities as well as applicable federal and state laws and regulations.

If excavation is required within five feet (5') of utility poles, pad-mounted equipment or concrete ductwork, shoring is required. Prior to shoring, the Contractor shall provide the serving-utility with the proposed method in writing for utility approval. Contractor shall support and protect exposed cables as prescribed by the respective electric and communications utilities. If Contractor damages an electric or communications cable, installed in accordance with an approved municipal Right-of-Way permit, cable shall be repaired by or replaced by the respective utility at Contractor's expense.

Hand digging is required within two feet (2') of a buried electrical or telecommunications cable. Once the utility's underground cable is exposed, it must be supported every two feet (2'), if it is not lying on the bottom of the trench. Any Work on the electric utility's facilities or infrastructure must be done by a Journeyman Power Lineman, with a State Certificate of Fitness. If an electrical or telecommunications cable is encountered during excavation, the cable shall be inspected for damage by the respective utility's operations personnel. If the cable condition appears acceptable, the cable shall be buried by the Contractor and sand bedded per the utility's specifications. The cable shall be tested by the utility to ensure its integrity. Should the cable be damaged due to the excavation, the utility will install a new cable at the Contractor's expense.

If Contractor requests the electric or telecommunications utility to do any shoring of that utility's infrastructure, Contractor shall coordinate three (3) working days in advance of shoring with that utility's operations department.

For overhead electrical power lines, Alaska State Law requires at least ten feet (10') clearance between energized conductors and construction equipment and structures. Before working under or near electrical power lines, Contractor shall contact that utility's operations division so they will be aware of the situation.

Any landscaping in areas above buried electrical or telecommunications cables should be limited to bedding plants, small shrubs, or grass. No concrete walls or structures can be built over underground cables.

Contractor shall coordinate any changes in grade and/or earthwork fill/cut areas with electric and telecommunications utilities so adequate infrastructure depth of bury may be maintained.

Any relocation or repair of electrical or telecommunications facilities must be done by the respective utility's personnel. All relocation Work performed by the electric and/or telecommunications utility for the Contractor shall be at the Contractor's expense.

All necessary arrangements to be made with the Utility for compliance with AS 18.60.680 shall be arranged by the Contractor in advance of the project start date. All costs of compliance with these requirements, including charges by the Utilities, shall be borne by the Contractor.

E. Traffic Signal Control and Communications

The Contractor shall follow the requirements set forth in Division 80 – Standard Construction Specifications for Traffic Signals and Illumination.

Prior to start of Work that is in close proximity to the following utilities, Contractor shall coordinate with each utility as required by the respective utility and provide a minimum of forty-eight (48) hours notice.

Alaska Communication Systems (ACS)

Anchorage Water & Wastewater Utility (AWWU)

AT&T Alascom

Chugach Electric Association (CEA)

ENSTAR Natural Gas

GCI Cable

Municipal Light & Power (ML&P)

Municipal Street and Storm Drain Maintenance

Municipal Traffic Signals Section

Solid Waste Services (SWS)

Contractor shall provide the Engineer a minimum of forty-eight (48) hours notice of all utility walk-through inspections and area sweeps. Contractor shall conduct the utility walk-through inspection in the presence of the Engineer, unless the Engineer directs otherwise. Contractor shall furnish a copy of all utility inspection reports to the Engineer prior to commencing construction activities, and provide copies of post-construction inspection reports prior to applying for final payment.

The requirements of this Section shall be considered incidental to the Contract and no separate payment shall be made. Further, the Contractor shall hold harmless, defend, and indemnify the Owner from and against any and all claims, damages, losses, and expenses, including attorney fees, by the Contractor or third-parties arising directly or indirectly out of any conflict between the Work under the Contract and any claim, interference, or delay for whatever reasons.

Article 4.18 Utility Connections

Whenever the Contract Documents require permanent connections to be made to utility lines, the Contractor shall, unless otherwise specified in the Special Provisions, be responsible for making the connection to the utility line, or have the Utility Company make

the connection, at the point(s) indicated on the Drawings. The Contractor shall be responsible for making all necessary applications to the Utility Company, for paying all fees and for performing any Work associated with making the connections which is not performed by the Utility Company. The Contractor is not responsible for bringing utility lines to the point of connection. The Contractor shall pay all costs for utility service prior to the Substantial Completion Date.

Article 4.19 Record Documents

Contractor shall maintain Record Documents on the job site consisting of a complete set of drawings, survey line and grade books, and all Contract Documents. Contractor shall record (on Record Documents) and keep current on a daily basis all changes in location (both vertical and horizontal), material, equipment, and all changes in the Work. Contractor shall record all horizontal and vertical locations of all utilities encountered, in conformance with the requirements of Division 65, Section 65.02, Article 2.14 – As-built Surveys and Record Drawings. Contractor shall identify design dimensions, elevations, and grades with no change as being accurate by noting "ASB" adjacent to the design value. At all times Contractor shall make the Record Documents available to the Engineer.

The Contractor shall provide horizontal and vertical locations of all water and sanitary sewer service connections at the property line or lease lot line, including swing ties and offsets to property or lease lot corners. The Record Documents shall include two or more swing ties from prominent, permanent features to show the location of each installed water service connection. Contractor shall provide swing ties as close to perpendicular to each other as possible, and when property or lease lot corners are in, use them as swing tie references.

Contractor shall ensure all additions and corrections are neat, clean, and legible. If additional plan sheets are required, Contractor shall prepare them on reproducible mylar or like material and size as the original Drawings. Contractor shall replace Drawings damaged or lost by Contractor at his expense and to the satisfaction of the Engineer.

The Engineer shall review all Record Documents for completeness and conformance to the standards stated above. Contractor shall make all corrections, changes, additions, and deletions required to conform to the standards.

The Engineer may periodically review the status of the Record Documents during the course of the Work. Failure of Contractor to keep the Record Documents current and in the required condition shall be considered cause for additional withholding from the progress payments as provided in Section 10.07, Article 7.5 - Progress Payments.

Contractor shall deliver approved final Record Documents, bearing certification by Contractor that the Record Documents are a complete and accurate representation of the project as constructed, to the Engineer within thirty (30) days after Substantial Completion or prior to Final Acceptance of the project, whichever is earlier.

Certification for Record Drawings shall be affixed to the final reproducible Drawings and shall include the following unqualified statement, which the Contractor must sign and date as a condition to Final Acceptance of the project.

> *"This shall serve to certify that these Record Drawings are a true and accurate representation of the project as constructed."*

A similarly prepared and affixed signed statement shall be included on other required Record Documents.

The development, preparation and presentation of all Record Documents is incidental to other Work and no separate payment shall be made.

Article 4.20 Operating and Maintenance Manuals

The Contractor shall provide to the Engineer prior to the pre-final inspection four (4) sets of Operating and Maintenance Manuals for all items of material and equipment as required by the Technical Specifications. In addition to the requirements in the Technical Specifications and Special Provisions, the Manuals shall contain an Index, by Specification Section; a key plan which graphically locates items of equipment; a list of manufacturers, suppliers and distributors with addresses and telephone numbers; and a list of local representatives with addresses and telephone numbers.

Article 4.21 Ownership of Contract Documents

Owner-furnished Drawings, Specifications, and copies thereof are the Owner's property. Contractor shall not use them on other projects and/or Work and shall return them to the Owner on request at the completion of the Work. Reuse of these materials without specific written authorization or adaptation by the Owner is prohibited and shall be at the risk of the user and without liability or legal expense to the Owner or their consultants. The Contractor shall hold harmless the Owner, Engineer, and Design Engineer and their consultants from any liability arising out of reuse of Drawings and/or Specifications supplied to the Contractor under the Contract.

SECTION 10.05 CONTROL OF WORK

Article 5.1 Authority of the Engineer

The Engineer shall be the Owner's representative and shall observe the Work in progress on behalf of the Owner and shall be identified at the time the Notice to Proceed is issued. The Engineer shall not be responsible for construction means, methods, techniques, sequences, or procedures, or for safety precautions and programs in connection with the Work. Visits and observations made by the Engineer shall not relieve the Contractor of his obligation to conduct comprehensive inspections of the Work and to furnish materials and perform acceptable Work, and to provide adequate safety precautions, in conformance with the intent of the Contract. The Work shall not be considered completed until a Certificate of Completion is issued by the Engineer. The Contractor shall at all times carry out and fulfill the written instructions and written directions of the Engineer regarding the Contract Documents.

The Engineer shall have the authority to order changes in the Work requiring an adjustment in the Contract amount and/or time. The Contractor shall perform such changes in the Work in accordance with supplemental Drawings and instructions as the Engineer may issue. Any single change in the Work, or cumulative changes in the Work, which will cause the total value of the Contract to exceed the limits stated in AMC 7.15.080 requires Assembly approval.

The Engineer shall in all cases make determinations on any and all questions which may arise concerning the quality, quantity, and acceptability of materials furnished, the Work performed, the rate of progress of the Work, the interpretation of Contract Documents, and the merit of all Contractor claims for additional compensation or time extension submitted under Article 5.21 – Claims for Additional Compensation.

If the Contractor determines that instructions, clarifications, or directions issued by the Engineer constitute a change in the requirements of the Contract Documents, the Contractor may make a claim as provided under Article 5.21 - Claims for Additional Compensation.

Article 5.2 Prosecution of the Work

The Work shall not commence until a written Notice-to-Proceed has been received by the Contractor. The Work shall commence within ten (10) days after the effective date specified in the Notice to Proceed and shall be prosecuted vigorously and continuously. No mobilization to the site or field construction activity shall occur until after the required Construction Progress Schedule has been initially submitted in the form and detail required; however, the counting of Contract time shall continue. In this instance, no claim for delay or compensation of any kind shall be considered meritorious and shall not be paid or otherwise recognized. No Requests for Payment shall be accepted until after the schedule has been submitted in the form and detail required.

Article 5.3 Construction Progress Schedule and Schedule of Values

Within ten (10) days after the effective date of the Notice to Proceed and prior to commencement of the Work, the Contractor shall submit to the Engineer a Construction Progress Schedule in the form of a time-scaled bar chart, the elements of which shall be the Divisions and Sections of the Project Manual, weather and ground condition restraints, and Work suspensions and other significant influences on the Contract amount and/or the time for completion of the Work. The Contractor shall include other significant features of the Work such as the submittal schedule, permit acquisition plan, material procurement milestones, plant and equipment procurement dates, and shipping schedules. Any Work plan requirements including project phasing shall also be included and identified in the Construction Progress Schedule. The bar chart shall include a graph representing the monthly percent of Work to be completed. The bar chart shall be revised and resubmitted as required by the Engineer, when conditions cause changes to the construction schedule, or on a monthly basis, whichever is sooner.

When required by the Engineer, the Contractor shall also deliver, at the same time the Construction Progress Schedule is delivered and in a form satisfactory to the Engineer, a Schedule of Values for Contract Payments for those lump sum items designated by the Engineer. When payment for the Work is based primarily on unit prices identified in the Bid Schedule, no Schedule of Values shall be required. However, when the Bid Schedule includes a mixture of unit prices and lump sum prices, and the lump sum prices represent a significant portion of the total Contract amount, then the Engineer reserves the right to require a Schedule of Values for specified lump sum items. The Contractor shall submit monthly partial Payment Estimates based on the Schedule of Values if they have been required. All Schedules of Values and Payment Estimates shall, as a minimum, be organized to be consistent with the Divisions and Sections of the Project Manual. The Engineer may require submission of revised construction schedules demonstrating the manner in which the Contractor will achieve the necessary rate of progress, all without additional cost to the Owner. Partial Payment Estimates may be appropriately reduced if the Engineer determines that the Contractor has failed to supply the Owner with the requested or necessary information.

In addition to the time-scaled bar chart described above, and when specified in the Special Provisions**,** the Contractor shall develop and submit to the Engineer for approval a time-scaled Critical Path Method (CPM) schedule. Both a hard copy and electronic copy of the CPM schedule shall be submitted. The Contractor shall revise and resubmit the CPM schedule to reflect any alteration in the sequence of scheduled activities or of the critical path with each partial payment request and at such other times as the Engineer may require, and at any time the Contractor determines that the critical path is altered by changes or other circumstances. The Contractor shall submit the initial CPM schedule to the Engineer no later than twenty-one (21) days from the effective date of the Notice to Proceed and at least monthly thereafter.

The Contractor shall organize the scheduled activities to be consistent with those Specifications, Divisions and Sections, required for the Work. Each Division and Section of the Specifications and each item in the Schedule of Values shall be represented by one or

more scheduled activities. In addition, one or more scheduled activities shall be used to represent the submittal schedule, permit acquisition, materials procurement, plant and equipment procurement, shipping, and all other significant elements of the Work. The Contractor shall include activities that address weather and ground condition restraints, critical dates, holidays, periods of Work suspension, and all other restraints (i.e., all events that are critical or will become critical to the schedule).

All schedules, whether they are bar chart schedules or CPM schedules, shall include enough detail to adequately describe all important activities necessary to complete the Work. Unless otherwise agreed to by the Engineer, no single activity in any schedule shall be allowed to represent more than fifty thousand dollars ($50,000) of the total scope of the Work. The initial schedule and monthly schedule updates shall be considered payable activities and appropriate payment amounts shall be included in the Schedule of Values or the Bid Schedule. Failure to provide adequate schedules shall result in non-payment in accordance with the amounts established in the Schedule of Values or the Bid Schedule.

Article 5.4 Non-Working Hours, Holidays, Saturdays, and Sundays

The Contractor shall give the Engineer forty-eight (48) hours advance notice of his intention to work overtime, Saturdays, nights, Sundays or holidays, or anytime outside the usual working hours. In no case shall the Contractor do any such Work without first notifying the Engineer to allow arrangements for proper inspection. Contractor shall not be reimbursed for Work performed in violation of this Article unless the Work is in direct response to an Emergency and approved after-the-fact by the Engineer.

The Contractor shall reimburse the Owner labor, overtime, and all other costs for inspection Work performed on Sundays, recognized holidays, and for any Work in excess of a standard work day (excluding meal times) except when the Work is required by a permit issued by an agency after the Contract has been executed, or unless the Work period is designated by the Owner.

Article 5.5 Shop Drawings

The Contractor shall submit to the Engineer for review six (6) copies of those Shop Drawings required by the Contract Documents within a reasonable time and in such sequence as to cause no delay in the Work or in the work of the Owner or any separate contractor. A properly completed Submittal Transmittal form shall accompany all submittals. If a substitution is being requested, a Substitution Request form shall be submitted with the appropriate backup documentation.

The Shop Drawings submitted by the Contractor shall bear his specific written and signed certification that he has verified: (1) that the Work shown is in conformance with the Contract Documents; (2) that he has determined and verified quantities, dimensions, field measurements, and related field construction criteria; and (3) that he has checked and coordinated the submittal with the requirements of the Work. The Contractor shall indicate on the Shop Drawing submittal any deviation from the requirements of the Contract Documents.

All Shop Drawings shall be clear and legible. Any Drawings submitted which appear to be carelessly prepared, erroneous, or unchecked shall be returned to the Contractor for further action, and resubmittal.

Within a reasonable time, the Engineer shall review and approve or take other appropriate action on the submittals, but only for conformance with the design concept of the Work and with the information given in the Contract Documents. The Engineer's approval of a specific item shall not indicate approval of an assembly of which the item is a component.

The Engineer shall state the reasons for rejection and/or resubmittal requirements if applicable.

Revisions on re-submittals other than those requested by the Engineer on previous submittals shall be specifically noted by the Contractor.

Upon approval of the Shop Drawings by the Engineer, two (2) copies shall be returned to the Contractor. If the Contractor requires more than two (2) copies, the Contractor shall submit such additional copies.

The Engineer's approval of Shop Drawings does not relieve the Contractor of responsibility for any deviation from the Contract Documents unless the Contractor has submitted and received written approval of the Deviation Request. Errors and omissions that may occur in the Shop Drawings are the responsibility of the Contractor. The Contractor is not relieved of this responsibility by the Engineer's approval of the Shop Drawings.

When Shop Drawings are required on a portion of the Work, the Contractor shall not commence that portion of Work or any item relying on said portion of Work until such Shop Drawings have been given written approval by the Engineer.

The Contractor shall keep one copy of all Contract Documents, including modifications, and one copy of approved Shop Drawings in good order and available to the Engineer or his representative at the construction site.

Article 5.6 Product Data

The Contractor shall submit for approval six (6) copies of complete Product Data for those items for which submittals are required by the Contract Documents including, but not limited to, specific performance data, material description, rating, capacity, working pressure, material gage or thickness, brand name, catalog number, and operating and maintenance data. Submittals shall be submitted within a reasonable time and in such sequence as to not cause a delay in the Work, in the Work of the Owner, or any separate Contractor. A properly completed Submittal Transmittal form shall accompany all submittals. If a substitution is being requested, a Substitution Request form shall be submitted with the appropriate backup documentation.

Within a reasonable time, the Engineer shall review and approve or take other action on the submittals. Approval by the Engineer is required before any of the equipment is ordered.

Product Data for equipment approved by the Engineer shall not in any case supersede the Contract Documents. The approval by the Engineer shall not relieve the Contractor from responsibility to correct deviations from Drawings or Specifications, unless he has notified the Engineer in writing of such deviations at the time of submission and secured the Engineer's written approval. The Contractor shall not be relieved from responsibility to correct errors of any sort in the items submitted. The Contractor shall check and approve the item described by the Product Data with the Contract Documents for deviations and errors prior to submittal to the Engineer for approval. The Contractor shall ensure that items to be furnished fit the space available as shown in the Contract Documents.

Upon approval of the equipment by the Engineer, the Contractor shall furnish four (4) copies of Product Data of all equipment or components together with operating and maintenance instructions.

Article 5.7 Materials

All materials and equipment furnished under the Contract shall be new, unless otherwise specified, and shall be of good quality, free from defects, and shall conform to the requirements of the Contract Documents. Substitute materials shall not be used unless approved through the Substitution Request process by the Engineer in writing prior to installation. When required by the Engineer, the Contractor shall furnish satisfactory evidence as to the kind and quality of materials and equipment.

In order to establish standards of quality, the Specifications may refer to certain products by name and catalog number. This procedure is not to be construed as eliminating from competition other products of equal or better quality by other manufacturers. The words "approved equal" shall be considered following all such listings regardless of whether or not they so appear, UNLESS the listing(s) specifically state “No Substitutions.” In such event, no substitutions shall be accepted.

The Contractor shall furnish the Engineer the complete list of proposed substitutions within ten (10) calendar days of the effective date of the Notice-to-Proceed (or such time as may be approved in writing by the Engineer), together with complete engineering and catalog data in sufficient time prior to their use to give the Engineer adequate time for review. A properly completed Submittal Transmittal form shall accompany all submittals. If a substitution is being requested, a Substitution Request form shall be submitted with the appropriate backup documentation. Failure on the part of the Contractor to obtain the necessary approval prior to ordering or using such alternate material or equipment shall not relieve the Contractor of furnishing acceptable material or equipment as required by the Contract Documents.

The Contractor shall abide by the Engineer's decision when proposed substitute materials or items of equipment are judged to be unacceptable and shall furnish the specified material or item of equipment in such case. The Engineer shall approve or disapprove proposed substitutions in writing within a reasonable time. No substitute materials shall be used unless approved in writing.

Materials shall be stored in such a manner as to insure the preservation of their quality and fitness for use. When considered necessary to protect materials against cold, dampness, or to keep them clean and free from dust, dirt, or other detrimental matter, suitable sheds, platforms, and covers shall be provided. The Contractor shall provide easy access to stored materials for inspection whenever requested by the Engineer.

Manufactured articles, material, and equipment shall be applied, installed, connected, erected, used, cleaned, and conditioned as directed by the Manufacturer. In the event of conflict between the manufacturer's directions and the Contract Documents, the higher standard requirements shall govern.

Article 5.8 Testing of Materials

All tests shall be made in accordance with methods as described and designated in the Contract Documents. When tests of materials are required on site, such tests shall be provided by and at the expense of the Owner unless otherwise specified in the Special Provisions. All factory testing, mill testing and other off site testing shall be as specified or required to conform with codes and industry standards and provided by and at the expense of the Contractor.

The Contractor shall provide such labor and facilities as may be required for collecting and forwarding Samples necessary for testing and shall hold the materials represented by the Samples until tests have been made and the materials found equal to the requirements of the Specifications. The Contractor in all cases shall furnish the required Samples without charge.

In the absence of any definite Specification, it shall be understood that such materials and tests shall meet the Specifications and requirements of the American Society for Testing and Materials (ASTM) or the American Association of State Highway Transportation Officials (AASHTO).

Wherever a particular specification of a Society for Testing and Materials is referred to by number, it shall be understood that such reference shall include all amendments and additions thereto adopted by such organizations prior to the award of the Contract.

Repetitive testing of materials in constant use may be required periodically by the Engineer. Required retesting shall be accomplished at the expense of the Contractor when materials have previously been tested and have not met the requirements of the Contract Documents.

Article 5.9 Contractor's Authorized Representatives and Employees

The Contractor shall within five (5) days after the Notice to Proceed but no later than the Preconstruction Conference, name the Superintendent, the Safety Supervisor required by Section 10.06, Article 6.8 – Safety, and file with the Engineer a list of all persons who are authorized to sign documents on behalf of the Contractor to fully bind the firm. The name and twenty-four (24) hour phone numbers of two persons that may legally act on behalf of the Contractor in case of emergency at any time shall also be provided.

The Superintendent is the Contractor's representative at the site and has authority to act on Contractor's behalf. All communications given to the Superintendent are as binding as if given to Contractor. A qualified Superintendent is one who is completely familiar with the requirements of the Contract Documents, has experience and ability to direct all Work at the site, is able to speak and communicate effectively using English, and is present at the job site, or readily available at all times while Work is in progress.

The Contractor shall employ only qualified journeymen, mechanics, tradesmen, and installers who are thoroughly skilled and experienced in their respective trades or specialties. When apprentices and helpers are employed, they shall be under the supervision of qualified journeymen mechanics and tradesmen at all times.

The Contractor shall at all times enforce strict discipline and good order among his employees and Subcontractors and shall not employ on the Work any unfit person or anyone not skilled in the task assigned to him. The Engineer may require, at no additional cost to the Owner, the Contractor to remove from the Work any employee or Subcontractor that the Engineer deems incompetent, careless, or otherwise objectionable.

Article 5.10 Subcontracting

If any part of the Work to be done under the Contract is subcontracted, the subcontracting shall be done in accordance with the following provisions:

1. All Subcontractors proposed for the Work shall be acceptable to the Owner.

2. Within ten (10) days after the effective date of the Notice-to-Proceed, and prior to commencement of the Work, the Contractor shall provide the Engineer in writing a list of Subcontractors together with a summary of the extent and character of the Work to be done by each Subcontractor. If for sufficient reason, at any time during the progress of the Work, the Engineer determines that any Subcontractor is incompetent or undesirable, he will notify the Contractor accordingly and immediate steps shall be taken by the Contractor for cancellation of such subcontract and new Subcontractor, acceptable to the Owner, shall be provided at no additional cost to the Owner. Subletting by Subcontractors shall be subject to the above.

3. The Contractor shall be fully responsible to the Owner for the acts, errors, and/or omissions of his Subcontractors and of persons either directly or indirectly employed by them. Nothing contained in the Contract Documents shall create any contractual relation between any Subcontractor and the Municipality.

4. The subcontracting of any of the Work to be done shall in no way relieve the Contractor of any part of his obligations under the Contract.

Article 5.11 Right of the Municipality to Do Work

Contractor expressly understands that the Municipality has the right to do Work and may award other Contracts in connection with the Work under the Contract or nearby projects. Contractor shall conduct his operations so as to interfere as little as possible with other contractors or subcontractors on or near the Work.

Article 5.12 Safeguarding of Excavations

The Contractor shall provide such safeguards and protections around and in the vicinity of all excavations as may be necessary to prevent damage to property or injury to persons.

The Contractor shall properly barricade all trench excavations with appropriate signs and warning lights placed to prevent inadvertent entry by vehicular or pedestrian traffic.

The Contractor shall backfill all trench excavations to the top of the trench at the end of each working day, except, at Contractor's option, a “bell-hole” may be left open if properly barricaded and adequate signage and warning lights are placed to prevent inadvertent entry by vehicular or pedestrian traffic.

If ground water or surface water results in standing water in the remaining excavation, the Contractor shall provide continuous pumping to maintain the excavation in a dewatered condition.

The Contractor shall maintain all roadways in a drivable condition for normal vehicular and transport operations, including emergency vehicles, at the end of each day's operation.

These requirements shall in no way relieve the Contractor of the obligation to restore private property to its preconstruction condition.

Article 5.13 Duties of Inspectors

Inspectors shall be authorized to inspect all Work and Materials. Such inspection may extend to all or any part of the Work and to the preparation, fabrication, or manufacture of the materials to be used. Inspectors are not authorized to alter or waive the provisions of the Contract. Inspectors are not authorized to issue instructions contrary to the Contract Documents or to act as foreman for the Contractor.

Inspectors shall immediately inform the Contractor of any deficiency known to exist in the Work and any laboratory test results.

As the Engineer’s authorized representative, the inspector may reject damaged or other unsuitable materials and direct their replacement in accordance with the Contract Documents. With prior approval of the Engineer, the inspector may issue temporary Work Suspension Orders due to (1) weather conditions; (2) the Contractor’s refusal to carry out the orders or directives of the Engineer or his Authorized Representative; or (3) the Contractor’s refusal to perform in accordance with the Contract Documents.

The Contractor's responsibility for Work performed under the Contract shall in no way be relieved because of the presence or absence of an inspector. Work shall not be considered acceptable because of the presence of an inspector.

Article 5.14 Inspection

The Engineer or his representative shall be allowed access to all parts of the Work at all times and shall be furnished with every reasonable facility for ascertaining whether or not the Work is being performed in accordance with the requirements and intent of the Contract Documents. Upon the request of the Engineer, the Contractor shall, at any time before Final Acceptance of the Work, remove or uncover such portions of the finished Work as may be directed. After examination, the Contractor shall restore said portions of the Work to the standard required by the Contract Documents. Should the Work thus exposed or examined prove acceptable, the uncovering or removing, the replacing of the coverage or the restoration of the parts removed shall be paid for as extra Work.

Should the Work so exposed or examined prove unacceptable, the uncovering or removing, replacing of the covering and the restoration of the parts removed, shall be at the Contractor's expense.

Article 5.15 Work Limits, Easements, and Rights-of-Way

The Owner shall provide work limits, rights-of-way, and easements for the Work. Information regarding the width and status of the easements is shown on the Drawings. The Contractor shall comply with all Special Conditions, provisions, stipulations, and restrictions thereof. The Contractor shall confine his operations to the designated Work areas, rights-of-way and easements and shall observe all restrictions. Prior to the start of construction under the Contract, the Contractor shall ensure that all permits necessary for the construction of the project, including right of entry for driveway reconstruction, have been obtained and shall ensure that they are available on the job site at all times.

The Contractor shall be responsible for any trespass upon adjacent property or injury thereto resulting from or in connection with his operations. The Contractor shall be liable for any claims that may be made on account of trespass and shall provide a written statement from the property owner of full restoration or satisfactory resolution prior to Final Acceptance of the Work. The Contractor shall not have the right to remove materials from a right-of-way, easement, or Work area unless otherwise provided in the Contract Documents.

Should the Contractor desire to go outside designated Work areas, rights-of-way or easements, he shall provide the Engineer with written permission from the property owner before entering such property. The written permission shall specifically provide that the property owner shall not hold the Municipality, its employees, agents or consultants liable for use of or damage to this property.

Article 5.16 Responsibility for Damages

The Contractor shall be responsible for all damages to property, injury to persons, and loss, expense, inconvenience, and delay that may be caused by or that may result from any act, omission, or neglect of the Contractor, his Subcontractors, or his employees in the performance of the Work.

It is specifically understood between the parties executing the Contract that the Contract Documents do not make anyone a third party beneficiary, nor does the Contract authorize anyone not a party to maintain a lawsuit for personal injuries or property damage.

Article 5.17 Repair of Damages Caused by Contractor

All damage and injury to property that is caused by or that results from the carrying out of the Work, or from any act, omission, or neglect of the Contractor, his Subcontractors, or his employees, shall promptly be remedied by the Contractor either by the repairing, rebuilding, or replacing of the property damaged or in some other manner satisfactory to the owner of such property. In case of failure on the part of the Contractor to promptly and satisfactorily remedy such damage or injury, the Municipality may proceed to repair, rebuild, or replace such property as required and the cost thereof shall be deducted from any monies due or which may become due the Contractor.

In applying the above provisions, the repairing, rebuilding, or replacing of damaged property shall be understood to include the providing of any temporary facilities that may be needed to maintain normal service until the required repairing, rebuilding, or replacing is accomplished.

This provision also applies to all areas used by the Contractor for staging of the construction and shall include restoring those properties to their original condition to the satisfaction of the Engineer.

Article 5.18 Changed Conditions

The Contractor shall notify the Engineer in writing, no later than two (2) working days and before such conditions are disturbed, of: (1) subsurface conditions at the site differing materially from those indicated in the Contract, or (2) unknown physical conditions at the site, of an unusual nature, differing materially from those ordinarily encountered and generally recognized as inherent in Work of the character provided for in the Contract. The Engineer shall promptly investigate the allegations. If the Engineer finds that such conditions do materially alter the Contract requirements so as to cause an increase or decrease in the Contractor's cost of, or the time required for, performance of the Contract, the Engineer may request that the Contractor submit the documentation required under Article 5.21 - Claims for Additional Compensation.

No claim of the Contractor under this clause shall be allowed unless the Contractor has given written notice as required. However, the time prescribed in this Article may be extended for good cause by the Engineer.

Article 5.19 Unauthorized and Defective Work

Any unauthorized or defective Work found to exist during construction shall be immediately remedied by the Contractor. If the Contractor fails to correct unauthorized or defective Work within three (3) days of receipt of written notice, the Owner may correct such deficiencies and deduct the cost thereof from any payment due the Contractor without prejudice to any other remedy including the use of Article 5.28 - Termination of Contract by Owner.

Article 5.20 Changes in the Work

The Engineer shall have the authority to order changes in the Work which may or may not require an adjustment in the Contract amount and/or time. Such changes in the Work shall be performed in accordance with any supplemental Drawings and instructions as the Engineer may issue. Any single change in the Work, or cumulative changes in the Work, which will cause the total value of the Contract to exceed the limits stated in AMC 7.15.080 requires Assembly approval.

The Owner shall pay for additions to the Work or take credit for reductions to the Work using one of the four methods described below and as specified in Section 10.07, Article 7.4 – Change Order Compensation Adjustments:

1. Negotiated unit or lump sum prices;

2. Contract unit or lump sum prices (if they have been included as a part of the Contract);

3. Time and Material prices (when the Engineer determines that Contract prices or negotiated prices do not apply); or

4. No cost changes (when the Engineer determines that a change is necessary which does not affect the price or time for the Work).

Prior to the Engineer authorizing payment for changed Work, the Contractor shall furnish a Change Order Proposal that is itemized as required by the Engineer for both additions and deletions to the Work.

All Contractor-initiated requests for deviation from the requirements of the Contract Documents shall be accomplished by the submittal of a completed Deviation Request Form and a Contractor's Change Order Proposal. Unless otherwise specified in the Engineer's approval of a Deviation Request, and formalized by an executed Change Order, any and all increased costs or delays resulting directly or indirectly from the deviation shall be borne solely by the Contractor.

The Contractor's Change Order Proposal shall be in sufficient detail to permit an analysis of all materials, labor, equipment, subcontracts, insurance, bonds, overhead costs and profit and shall cover all Work involved to accomplish the modification whether deleted,

added or changed. Any amount claimed for subcontracts shall be supported by a similar price breakdown. The Contractor agrees that it will incorporate the provisions of this Article into all agreements with lower tier subcontractors.

Any compensation paid in conjunction with the terms of a Change Order shall constitute total compensation due the Contractor for the Work or alteration defined in the Change Order. By signing the Change Order, the Contractor acknowledges that the stipulated compensation includes payment and Contract time adjustments for the Work or alteration plus all payment for the interruption of schedules, extended overhead, delay or any other impact claim or consequential effects created by the Work or alteration defined in the Change Order, and by such signing specifically waives any reservation or claim for additional compensation in respect to the subject of the Change Order.

If the Contractor's Change Order Proposal includes a request for a time extension, a justification thereof shall also be furnished. The Change Order Proposal together with the price breakdown and time extension justification shall be furnished by such date as may be specified by the Engineer.

The Engineer may, subject to the written approval of the Purchasing Officer, execute a Unilateral Change Order within the limitations set forth in AMC 7.15.080 if:

1. the Engineer determines that adjustment in compensation or time is due either the Contractor or the Owner;

2. negotiations fail to reach mutual agreement on the magnitude of adjustment; and

3. the revised Work is such that, in the opinion of the Engineer, it could not be reasonably conducted at a time or in a manner that would permit determining its value on a Time and Material basis under Section 10.07, Article 7.4, SubArticle B – Time and Material Changes.

A Unilateral Change Order shall have the same force and effect as a mutually executed Change Order, except that the Contractor shall not have waived his rights to pursue additional compensation as a separate claim. A Unilateral Change Order shall incorporate such Contract adjustment as the Engineer may determine, which may not necessarily be the last offer made during negotiations. The incorporation of the Work by Unilateral Change Order shall in no way diminish the Contractor's responsibility to complete the revised Work in an efficient, timely manner as otherwise required by the Contract Documents.

Article 5.21 Claims for Additional Compensation

Except where restricted in the Contract Documents, the Contractor may make a claim for additional compensation when he believes that he has incurred additional costs due to the acts, errors, or omissions of the Owner or by reason of changed conditions. If the Contractor becomes aware of any act or occurrence which may form the basis of a claim, the Contractor shall make every effort to mitigate the extent of any amounts claimed for additional compensation and shall immediately notify the Engineer in writing of the potential

for the claim, providing sufficient information to outline the basis of the claim. If the matter is not resolved within seven (7) days, the Contractor shall, within the next fourteen (14) days, submit written notice of the facts which may form the basis of the claim.

Thereafter, the Contractor shall submit the claim in writing to the Engineer within sixty (60) days of the submission of the written notice of the facts unless the Engineer agrees in writing to an extension of time for good cause shown. The Engineer may grant up to a sixty (60) day extension only upon the written request of the Contractor in which all reasons for the request are stated. The Contractor agrees that unless these written notices are provided, the Contractor shall have no entitlement to compensation for the acts, errors, or omissions of the Owner, the Engineer or any other Contractor employed by the Owner. The Contractor shall in all cases continue performance of the Contract.

The written claim presented by the Contractor shall be complete and shall specifically include the following:

1. the facts and circumstances surrounding the claim and the Contract provisions under which the claim is made;
2. the Contractor's assertion as to the original requirements of the Contract Documents and the basis for that assertion or position, citing all pertinent Specifications, Details, Drawing notes or other Contract provisions;
3. a clear certification that the Contractor's Bid Costs were in fact based on the stated original interpretation;
4. the Contractor's assertion as to the revised requirements of the Contract Documents, citing all pertinent Contract provisions, or lack thereof, and other records on which that assertion or position is based;
5. a narrative description of the increase in the Scope-of-Work resulting from the revision in the requirements;
6. the Pay Items and quantities affected by the alleged change;
7. references to previous notices of pending claim; and
8. the specific relief requested, including both time extension and additional cost compensation and the basis on which both were calculated.

In the case of cost compensation, such basis for specific relief shall include (1) the labor classifications, rates and additional time; (2) the equipment descriptions, rates and additional time; (3) material descriptions, unit prices and quantities; and (4) appropriate supporting documentation as to materials, unit prices, labor rates and equipment rates. The permitted rates and allowances shall be as provided under Article 5.20 - Changes in the Work.

Claims presented that do not include the above information or otherwise considered to be incomplete will be returned to the Contractor without review by the Engineer. Within sixty (60) days after receipt of the Contractor's properly submitted and complete claim, the Engineer shall render a Final Determination as to the merit of the claim and, if any are justified, the amount of additional compensation and time due. Any change in the Contract

sum or allowable time resulting from such claim shall be authorized only by the execution of a proper Change Order.

Article 5.22 Time for Completion of Work

The Owner shall indicate in the Special Provisions either a time period for completion of the Work or a completion date. Time is of the essence in the Contract. Therefore, the Work to be performed under the Contract shall be completed in its entirety within the time period specified or before the completion date.

The Contractor shall furnish such manpower, materials, facilities, and equipment and shall work the required hours, including authorized night shifts, overtime operations, and Saturdays, Sundays, and holidays as may be necessary to insure the completion of the Work within the time specified.

Failure of the Contractor to comply with the requirements of this Article may be considered grounds for termination under the provisions of Article 5.28 - Termination of Contractor by Owner.

Article 5.23 Delays and Extension of Time

If the Contractor is delayed, beyond his control and without fault or negligence on his part, at any time in the progress of the Work by any act or neglect of the Owner or by changes ordered in the Work, or by labor disputes, fire, unusual delay in transportation, adverse weather conditions not reasonably anticipated, unavailability of materials for which orders were placed timely, or by unavoidable casualties, then the time period for completion or the completion date may be extended by Change Order, for such reasonable time as the Engineer may determine, without invalidating any of the provisions of the Contract and without the consent of the Surety.

Any claim for extension of time shall be made in accordance with the procedures set forth in Article 5.21 - Claims for Additional Compensation. In the case of a continuing delay, only one claim is necessary. The Contractor shall provide an estimate of the probable impact of such delay on the progress of the Work.

No extension of time or changes to bid unit prices shall be granted due to the Contractor's failure to properly plan for and deliver bid items that require a long lead-time The timely delivery of schedule-critical items is crucial and the Contractor shall include in his bid unit price the cost (if any) of expedited delivery to assure that construction can be completed within the time of completion specified in the Contract.

Article 5.24 Suspension of Work

By executing a Contract, the Contractor agrees that the Owner has the undisputed right to suspend the Work and that this right is a material condition of the Contract. The Contractor shall immediately suspend the Work as directed in a written order from the Engineer or Owner. Failure of the Contractor to immediately suspend the Work as directed shall constitute a material and immediate breach of the Contract by the Contractor. The Owner

may terminate the Contract for default without providing the ten (10) day notice specified in Article 5.28 – Termination of Contract by Owner, should the Contractor fail, refuse or otherwise not immediately suspend the Work as directed.

The Work may be suspended in whole or in part by a written order of the Engineer for the convenience of the Owner. The Contractor shall take every precaution to prevent any damage or unreasonable deterioration of the Work during the time it is suspended. Suspension of the Work by the Engineer for the convenience of the Owner may furnish grounds for a claim by the Contractor for additional compensation and/or a time extension, in which case the Contractor, when making a claim, shall comply with the provisions of Article 5.21 - Claims for Additional Compensation.

Upon the failure of the Contractor to carry out the orders of the Engineer or to perform in accordance with the Contract Documents, the Engineer may suspend the Work for such period as may be necessary. Time lost by reason of such suspension, or replacement of improper Work or material, shall not furnish any grounds to the Contractor for claiming additional compensation and/or an extension of time and shall not release the Contractor from any liability for damages or for failure to complete the Work within the time prescribed.

In the event that a suspension of Work is ordered in writing by the Engineer due to adverse weather or unforeseen conditions, and, in the opinion of the Engineer, the Contractor has prosecuted the Work with due diligence prior to the time of suspension, the Contractor may be due an extension of time, but not additional compensation.

Where the Contract provides for a time period for completion and the Work is suspended for the convenience of the Owner or adverse weather or unforeseen conditions and the Contractor has prosecuted the Work with due diligence, the time period and liquidated damages provision of the Contract shall be suspended until a Notice to Resume Work is issued by the Engineer.

Article 5.25 Final Trimming of Work

The Contractor shall be responsible for all repair to the Work as necessary to overcome deterioration or damage that may occur prior to Final Inspection. The Contractor at all times shall keep the premises free from accumulation of waste materials, rubbish and debris. The Contractor shall grade all existing driveways on, and which have been affected by the project within the rights-of-way or easements as directed by the Engineer. At the completion of the Work, all waste materials, rubbish, debris and temporary structures from and about the Project as well as all his tools, construction equipment, machinery and surplus materials shall have been removed from the Project area. The Work shall be in a neatly trimmed and well-finished condition throughout at the time of Final Inspection. This Work shall be considered incidental to the Contract unless there is a specific Contract item for this Work.

Any time during the Work that cleanup, in the opinion of the Engineer, is not keeping pace with the rest of the Work, the Contractor shall, at the direction of the Engineer, suspend all operations on the major items of Work until the premises are cleaned up to the satisfaction

of the Owner. Any additional expense involved shall be the sole responsibility of the Contractor and the Owner shall not be held liable for this additional expense.

All contours, roadway surfaces, drainage courses, street name signs, traffic control signs, mailboxes, newspaper boxes, property corner markers, survey markers, survey monuments, utility markers, existing vegetation, shrubbery, lawns, trees, fences, rockeries, landscaping, sidewalks, driveways, and other improvements, removed to facilitate or damaged by the Contractor's operations shall be fully restored to original condition at their original location by the Contractor unless otherwise required by the Contract Documents or directed by the Engineer. Items damaged by the Contractor during removal, storage, or restoration shall be repaired or replaced in kind by the Contractor. Repairing or replacing damaged items shall be considered incidental to the Contract and no separate payment shall be made.

Article 5.26 Final Inspection

When the Contractor, through his own comprehensive inspection, has concluded that all Work is completed, all code compliance inspections have been performed, and all other Contract requirements have been fulfilled; he shall notify the Engineer in writing of completion and request a pre-final inspection of the Project. The pre-final inspection shall be performed in the presence of a representative of the Owner, the Engineer, and the Contractor. The Contractor shall make available copies of all required code compliance inspection reports at this inspection. All deficiencies indicated by the pre-final inspection shall be listed and promptly furnished to the Contractor for remedial action. When all listed deficiencies have been corrected, the Contractor shall notify the Engineer and a Final Inspection will be performed.

When the Final Inspection reveals uncorrected listed deficiencies, the above outlined procedure shall be repeated and the cost of reinspection shall be deducted from any money due the Contractor. This cost shall include, but is not limited to, salaries, administrative, and transportation costs.

The Final Acceptance Date shall be the date upon which the Final Inspection has been accepted and the Engineer has received and approved, as applicable, the following submittals:

A. Red-lined or Record Drawings;

B. Survey Field Books;

C. O&M Manuals as appropriate;

D. Video as appropriate; and

E. Other contractually required documents as noted in the Contract; and

The Engineer shall provide the Contractor a letter specifying the Final Acceptance Date, pertinent warranty information, and applicable information about the landscaping Plant Establishment Period.

Article 5.27 Liquidated Damages

The Owner may withhold from any progress payment the sum per day identified in the Special Provisions as Liquidated Damages for each and every calendar day that the Substantial Completion Date is delayed beyond the Contract Completion Date. The Owner may withhold out of any progress payment the sum per day identified in the Special Provisions as Liquidated Damages for each and every calendar day that the Final Acceptance Date is delayed beyond the Contract Completion Date. If no money is due Contractor, the Owner shall have the right to recover said sums from Contractor, the Surety, or both.

The Contractor acknowledges that the daily amount of the Liquidated Damages provision is not a penalty, but rather is a reimbursement for damages that the Owner will sustain by reason of delayed completion. The Contractor further acknowledges that the daily amount of Liquidated Damages is a reasonable alternative to the complex calculations that would otherwise be necessary to determine such damages.

Permitting the Contractor to continue and finish the Work or any part of it after the time fixed for its completion, or after the date to which the time for completion may have been extended, shall in no way operate as a waiver on the part of the Owner of any of its rights, including liquidated damages, under the Contract.

Article 5.28 Termination of Contract by Owner

If the Contractor should be adjudged bankrupt, or if he should make a general assignment for the benefit of his creditors, or if a receiver should be appointed on account of his insolvency, or if he should persistently or repeatedly refuse or fail to supply enough properly skilled workmen or proper materials for the efficient prosecution of the Work, or persistently disregard laws, ordinances, or the instructions of the Engineer, or otherwise substantially violate any provisions of the Contract, the Owner may, without prejudice to any other right or remedy and after giving the Contractor and his Surety ten (10) days concurrent written notice, terminate the Contract and take possession of the premises and of all materials, tools and appliances thereon. Notwithstanding the foregoing, the Owner may immediately terminate the Contract for default without providing a ten (10) day notice if the Contractor fails, refuses or otherwise does not comply with a written order by the Engineer that may involve issues of safety or a Suspension of Work issued under Article 5.24 – Suspension of Work. When the Contractor and Surety are notified of the termination of the Contract, the Owner may demand that the Surety fulfill its obligations under the Performance and Payment Bond. Should the Surety fail to perform its obligations under the Bond after demand of the Owner, the Owner may finish the Work by whatever method that the Owner determines expedient. The Contractor and his Surety shall be responsible for compensating the Owner for all excess costs, including applicable liquidated damages and all reprocurement costs, incurred in accomplishment of the Work.

In the event the Owner terminates the Contract, the Owner does not waive any other right or remedy under the Contract or any other right or remedy available at law or equity. The Contractor may not be allowed to bid on any Owner's contracts for a period of two years following the date of this termination by the Owner.

In the case of termination before completion for any cause whatsoever, the Contractor, if notified to do so by the Owner, shall promptly remove equipment and supplies from the premises of the Owner. Failure to do so shall authorize the Owner to remove such equipment and supplies from the premises at the expense of the Contractor.

Article 5.29 Termination of Work for Owners Convenience

At any time during the term of the Contract, the Owner may terminate the Work, in whole or in part, for any reason that the Engineer shall determine to be in the best interest of the Owner. Any such termination shall be accomplished by delivery of a Notice of Termination to the Contractor, specifying (1) that the termination is for the convenience of the Owner; (2) the extent to which performance of the Work under the Contract is terminated; and (3) the date upon which such termination becomes effective.

Except as otherwise directed by the Owner, after receipt of a Notice of Termination, the Contractor shall:

1. Stop Work under the Contract on the date and to the extent specified in the Notice of Termination;
2. Place no further orders or subcontracts for materials, services, or facilities except as may be necessary for completion of such portion of the Work under the Contract as is not terminated;
3. Terminate all orders and subcontracts to the extent that they relate to the performance of Work terminated by the Notice of Termination;
4. Settle all outstanding liabilities and all claims arising out of such termination of orders and subcontracts, the cost of which would be reimbursable, in whole, or in part, in accordance with the provisions of the Contract;
5. Submit to the Engineer a list, certified as to quantity and quality, of any or all items of termination inventory exclusive of items the disposition of which had been directed or authorized by the Engineer;
6. Transfer to the Engineer the completed or partially completed plans, drawings, information, and other property which, if the Contract had been completed, would be required to be furnished to the Owner;
7. Take such action as may be necessary, or as the Engineer may direct, for the protection and preservation of the property related to the Contract which is in the possession of the Contractor and in which the Owner has or may acquire any interest.

The Contractor shall proceed immediately with the performance of the above obligations notwithstanding any delay in determining or adjusting the amount of any item of reimbursable cost under this clause.

When the Owner orders Termination of Work effective on a certain date, all completed units of Work within each pay item as of that date shall be paid for at the Contract unit bid price. Payment for materials included in the material inventory described in #5 above shall be paid at actual cost delivered to the project or storage site, including transportation charges. Allowable total markup on the actual cost shall not exceed fifteen percent (15%).

After receipt of a Notice of Termination, the Contractor shall submit to the Engineer his claim for alleged additional damages or costs not covered above or elsewhere in these Specifications as provided in Article 5.21 - Claims for Additional Compensation. In no event, however, shall loss of anticipated profits be considered as part of any claim and/or settlement.

Article 5.30 Use of Completed or Uncompleted Portions

The Owner shall have the right to take possession of and use any completed or partially completed portions of the Work, prior to the date specified for completion, and such action and use shall not be considered an acceptance of that Work. If such use by the Owner causes additional expense to the Contractor and/or delay in the Work, the Contractor may be entitled to additional compensation and/or an extension of time. Claims for additional compensation or a time extension shall follow the procedures set forth in Article 5.21 - Claims for Additional Compensation. The Owner shall be responsible for accomplishing routine maintenance operations during this use and for any damage caused to the Work by those operations.

Article 5.31 Winter Suspension

Unless otherwise specified in the Special Provisions, the Engineer may suspend the Work when adverse winter weather conditions make it impractical to secure the desired results. Where the Work is suspended for adverse winter weather conditions, the Contractor shall not be entitled to additional compensation.

Winter Suspensions generally occur on October 15 of each construction season. Although this date may vary from year to year, the Contractor should plan his Work in anticipation of a Winter Suspension occurring at or about this time each year. The Contractor shall schedule and sequence all operations such that the condition of the Work meets Suitable Conditions for Winter Maintenance, as described in this Article under SubArticle C below, to provide for routine maintenance by the Owner during the Winter Suspension period.

If the Work area is judged by the Owner to not meet Suitable Conditions to provide for routine maintenance during the Winter Suspension period, the Contractor shall be responsible for all costs necessary to establish Suitable Conditions for Winter Maintenance, including costs incurred by the Owner to prepare the site to meet Suitable Conditions and/or the payment of Excess Maintenance Costs as described in SubArticle B below.

A. Coordination with the Owner

The Contractor shall meet with the Engineer no later than September 15th to outline the Work to be completed before Winter Suspension. At the meeting, the Contractor shall provide a written Winter Suspension Plan describing the Work to be completed prior to the Winter Suspension period, including an updated progress schedule, clear definitions of the Work underway and the proposed condition of each element of the Work at the time of the anticipated Winter Suspension. The Winter Suspension Plan shall be prepared to achieve Suitable Conditions for Winter Maintenance, as described in SubArticle C below.

Before Winter Suspension, the Contractor shall, at his own expense, do all Work necessary to establish Suitable Conditions for Winter Maintenance in accordance with the Contractor's Winter Suspension Plan. The Contractor shall then schedule a field review for acceptance by the Engineer. Within two (2) days following the field review, the Engineer shall prepare a punch list of deficiencies the Contractor is required to correct prior to acceptance of Suitable Conditions for Winter Maintenance. The Contractor shall correct all items on the punch list to the satisfaction of the Engineer by the date shown on the punch list. During this period, the Contractor may continue to perform Work, as long as it is performed in such a manner that it does not compromise the Contractor's ability to achieve Suitable Conditions for Winter Maintenance.

If the Contractor meets all the coordination requirements described herein, the Engineer shall issue a Notice of Acceptance for Winter Maintenance by the Owner. If the Contractor fails to satisfy all the coordination requirements described herein, the Owner may impose any and all Remedies for Failure to Comply, as described in SubArticle B below.

If unusual weather, scheduling constraints, or other unforeseen conditions make it difficult to initiate or continue the Work in distinct areas within the project limits, the Contractor may be entitled to a time extension to the Contract Completion Date if:

1. The Contractor notifies the Owner, prior to September 15, of the issues affecting the Contractor's ability to perform the Work; or

2. The Contractor establishes that initiating or continuing the Work will result in conditions not suitable for winter maintenance by the Owner; or

3. The Contractor specifically identifies those distinct areas where the Work cannot be continued or initiated because it will result in conditions not suitable for winter maintenance by the Owner.

If the Owner agrees that a time extension to the Contract Completion Date is warranted, the Owner shall issue a Change Order acknowledging the revised Contract Completion Date. However, the Contractor shall not be entitled to additional compensation as a result of the issuance of such a time extension.

B. Remedies for Failure to Comply

The Engineer may apply any, some, or all of the remedies identified in this SubArticle if (1) the Contractor has not presented a written Winter Suspension Plan prior to September 20th; (2) at any time, in the opinion of the Engineer, the Contractor does not appear to be preparing the Work for Winter Suspension in a reasonable manner; (3) the Contractor fails to correct punch list items for Winter Suspension; or (4) for any reason the Work is found to be unsuitable for maintenance by the Owner during the Winter Suspension period.

Remedies the Engineer may utilize include the following:

1. Direct the Contractor to complete the Work required to meet Suitable Conditions for Winter Maintenance at the Contractor's expense.

2. Using the forces of the Owner or a separate contractor, complete the Work required to meet Suitable Conditions for Winter Maintenance. Costs incurred by the Owner due to the Contractor's failure to obtain a Notice of Acceptance for Winter Maintenance from the Owner shall be borne by the Contractor, including but not necessarily limited to Work required of the Owner's forces, the cost of separate contractors retained by the Owner, and/or any claims made against the Owner by the abutting property owners or the public.

3. If the Contractor fails to prepare the Work to meet Suitable Conditions for Winter Maintenance, and the Owner is unable to correct the Contractor's Work to achieve Suitable Conditions for Winter Maintenance, the Excess Maintenance Costs incurred by the Owner above and beyond those costs reasonably necessary to maintain the road had it been prepared to meet Suitable Conditions for Winter Maintenance shall be borne by the Contractor. Excess Maintenance Costs shall be determined by the Owner and submitted to the Contractor at the end of the winter maintenance period.

If the Engineer determines it is in the best interest of the Owner, the abutting property owners, or the public, he may also apply any of these remedies to specific elements or distinct areas of the Work while applying other remedies to other elements or distinct areas of the Work. If, in the opinion of the Engineer, it is in the best interest of the Municipality to delete portions of the Suitable Conditions for Winter Maintenance, the Engineer may issue written notice to the Contractor.

C. Suitable Conditions for Winter Maintenance

Suitable Conditions for Winter Maintenance shall be determined by the Engineer and shall include the following:

1. Travel ways that are to be paved in their final condition as a part of the Contract shall be paved as follows:

   a. Final pavement as shown on the Drawings, or

   b. The bottom layer of pavement shown on the Drawings; placed according to the Contract Documents at the design thickness of the layer. (In the event the layer is less than one and one-half inches (1.5") thick, the Engineer may require the thickness be increased.); or

c. Temporary AC Pavement (Class E), typically twenty-four feet (24') wide, two inches (2") in thickness, along the project centerline in those areas designated by the Engineer. If Temporary AC Pavement is designated by the Engineer, the Contractor shall be paid for the installation by Change Order at fifty percent (50%) of the Contract unit rate for AC Pavement.

2. Drainage ways that are to be paved with curb and gutter, valley gutter, paved shoulders or paved swales in their final condition as a part of the Contract shall be paved as follows:

   a. Final curb & gutter, valley gutter or pavement as shown on the Drawings; or

   b. Temporary AC Pavement (Class E), two inches (2") in thickness, in those areas designated by the Engineer. If Temporary AC Pavement is designated by the Engineer, the Contractor shall be paid for the installation by change order at fifty percent (50%) of the Contract unit rate for AC Pavement.

   For temporary drainage facilities to be deemed suitable, all collection points included in the project design shall be functional. Where Best Management Practices are in place for Erosion and Sediment Control, those features shall be made suitable for the winter to the satisfaction of the Engineer.

3. All obstacles to snow clearing, snow storage, and snow loading and hauling shall be removed or diminished to the satisfaction of the Engineer. The space required for snow clearing, storage, loading and hauling shall be as determined by the Engineer.

4. Illumination, traffic signals, and signage shall be in proper working order.

5. All existing roads affected by the Work shall be returned to full operation.

6. Contractor shall install a minimum of six inches (6") of cover for all utilities below the surface of the travel way during the Winter Suspension period. If subsequent adjustments to the utilities become necessary when the travel ways are completed at a later date, the cost of these subsequent adjustments shall be considered incidental to the Contract.

7. Temporary or permanent backfill must be installed behind all curbs and medians to eliminate tripping hazards during the Winter Suspension period.

Installation of Temporary AC Pavement shall not be a basis for any time extension or additional costs, other than the actual cost to install the Temporary AC Pavement as described above.

D. Owner and Contractor Responsibilities During the Winter Maintenance Period

The Owner shall perform the routine winter maintenance operations specified below during the Winter Suspension Period. Routine winter maintenance shall include and is limited to the following:

1. Maintaining the traveled way and/or detour surface.

2. Maintaining drainage facilities except final cleaning of storm drains.

3. Maintaining access to abutting properties.

The Contractor shall remain responsible for all other elements of the Work, including those described by Section 10.04, Article 4.15 – Temporary Erosion Control and Storm Water Pollution Prevention Plans for Construction, throughout the Winter Suspension period.

During the Winter Suspension period, the Contractor shall continue to be responsible for the protection of the Work and shall repair all damage at the Contractor's expense except where the damage is caused by the Owner's maintenance forces. When the Work is resumed, the Contractor agrees to accept the traveled way and drainage system as the Owner has maintained it and no claim shall be made because of its condition or the manner in which the Owner performed the maintenance.

Article 5.32 Pre-Construction Conference

Prior to the start of Work and within five (5) working days after delivery of the executed Contract by the Owner to the Contractor, the Owner shall hold a Pre-Construction Conference to (1) review the Contractor's schedules and Drawings; (2) establish procedures for handling shop drawings and other submissions; (3) establish procedures for submitting and processing applications for payment; and (4) address any other general housekeeping issues as necessary. Contractor and his Superintendent and Subcontractors shall attend the conference to meet with the Owner or his Representative, Engineer, and Inspector.

Article 5.33 Use of Explosives

Unless specifically authorized in the Special Provisions, the use of explosives is prohibited.

SECTION 10.06 LEGAL RELATIONS AND RESPONSIBILITIES

Article 6.1 Laws to be Observed

The Contract shall be governed by the laws of the State of Alaska. The Contractor at all times shall observe and comply with all Federal, State and local laws, ordinances, and regulations in any manner affecting the conduct of the Work and all such orders or decrees existing or which may be enacted or promulgated by legislative bodies, boards, tribunals or Courts having any jurisdiction or authority over the Work. The Contractor shall defend, indemnify, and hold harmless the Municipality and the officers, employees, and agents of the Owner, including the Engineer, against any claim or liability arising from or based on the violation of any such laws, ordinances, regulations, orders, or decrees, whether such violations be by the Contractor, his Subcontractor(s), or his employees.

Article 6.2 Notice to Contractors

Any written notice to the Contractor by the Owner shall be served on said Contractor or his representative either personally or by mailing to the address given in the Contract. Owner shall not use electronic facsimile transmissions to serve notice to Contractor.

Article 6.3 Notice by Contractors

Any notice to the Owner by the Contractor shall be made in writing delivered to the Engineer or his representative in person or mailed to the office of the Engineer at the address given in the official Notice to Proceed. Contractor shall not use electronic facsimile transmissions to serve notice to the Owner.

Article 6.4 Successors and Assigns

The Contractor binds himself, his partners, successors, assigns, and legal representatives to the Owner with respect to all covenants, conditions, and obligations contained in the Contract Documents.

Article 6.5 Assignments

The Contractor shall not assign the whole or any part of the Contract or any monies due or to become due the Contractor without written consent of the Owner. If the Contractor assigns all or any part of any monies due or to become due him, the instrument of assignment shall state that the right of the assignee in and to any monies due or to become due to the Contractor shall be subject to prior claims of all persons, firms, and corporations who performed Work or supplied materials under the Contract.

Article 6.6 Permits

All permits or licenses which are required by any federal, state or local governmental agency or any public utility and not provided by Owner shall be obtained and paid for by the Contractor when such permits or licenses are necessary for the prosecution of the

Work. The Contractor shall be responsible for all stipulations of these permits and shall be responsible for all costs associated with these permits and their stipulations.

The Contractor shall give all notices and comply with all laws, ordinances, rules and regulations bearing on the conduct of the Work as specified herein. The Contractor shall also be responsible for requesting all code compliance inspections.

The Owner shall obtain the required permits and authorizations for Work within the State of Alaska Railroad rights-of-way and permits from the U.S. Corps of Engineers, U.S. Fish and Wildlife Service, and State Department of Fish and Game. Prior to the start of Work within the scope of such permits, the Contractor shall obtain the necessary approvals and permits relating to the method, plan and exact schedule of construction for any Work within such rights-of-way, creeks and wetlands.

Failure on the part of the Contractor to comply with any of the stipulations of any of the applicable Owner- or Contractor-acquired permits shall be sufficient cause for the Owner to suspend that Work. Suspension of Work based on the forgoing shall not be subject to Section 10.05, Articles 5.21 – Claims for Additional Compensation or 5.24 – Suspension of Work for a basis of a claim by the Contractor

The payment of basic and special fees, established under AMC 24.30.100, Permit Fees For Permanent Uses of Public Places (street use ordinance), and which are applicable to the project, shall not be the responsibility of the Contractor. These fees shall not be considered a bid item, nor shall they be considered incidental to any bid item.

The Contractor shall obtain permits and fulfill all other requirements of M.A.S.S., the Municipal Code, the Building Official, and the Municipal Engineer.

The Contractor shall obtain and pay for all permits, deposits and connection fees for tapping any required water and/or wastewater service connection for new and disrupted service connections.

Where sanitary sewer is available, the Contractor may apply for a dewatering permit from AWWU for dewatering discharge to the sanitary sewer. Contractor shall comply with Division 20, Section 20.12 – Dewatering for dewatering activities.

Article 6.7 Copyrights and Patents

The Contractor shall defend, indemnify and hold harmless the Municipality, its officers, employees, and agents of the Owner, including the Engineer from any and all claims, suits, or actions brought for the infringement of any copyright or patent claimed to be infringed by any material, devices, drawings, method, or process to be incorporated in the Work and/or required to be used in connection with the Work, including all attorney's fees and costs.

Article 6.8 Safety

The Contractor shall be solely and completely responsible for conditions of the jobsite, including safety of all persons (including employees, Owner’s representatives, and the

public) and property during performance of the Work. This requirement shall apply continuously twenty-four (24) hours per day, seven (7) days per week and shall not be limited to normal working hours. Safety provisions shall conform to U.S. Department of Labor (OSHA), the State Occupational Safety and Health Act, and all other applicable Federal, State, County, and local laws, ordinances, codes, the requirements set forth below, and any regulations that may be detailed in other parts of the Contract Documents. Where any of the aforementioned safety provisions, laws, ordinances, and/or Contract Document requirements is in conflict, the more stringent requirement shall be followed. The Contractor's failure to thoroughly familiarize himself with the aforementioned safety provisions shall not relieve him from compliance with the obligations and penalties set forth herein.

The Contractor shall develop and maintain for the duration of the Contract, a safety program that will effectively incorporate and implement all required safety provisions. The Contractor shall appoint an employee who is qualified and authorized to supervise and enforce compliance with the safety program and shall notify the Engineer of the name and contact phone number for this person prior to commencement of the Work.

The duty of the Engineer to conduct construction review of the Work does not include review and/or approval of the adequacy of the Contractor's safety supervisor, the safety program, or any safety measures taken in, on, or near the construction site.

If death or serious injuries or serious damages are caused, the accident shall be reported immediately by telephone or messenger to both the Engineer and the Owner. In addition, the Contractor must promptly report in writing to the Engineer all accidents whatsoever arising out of, or in connection with, the performance of the Work whether on, or adjacent to, the site, giving full details and statements of witnesses.

If a claim is made by anyone against the Contractor, including his employees and agents, or any Subcontractor on account of any accident, the Contractor shall promptly report the facts in writing to the Engineer, giving full details of the claim.

Failure to comply with the Occupational Safety and Health rules and regulations, notwithstanding any other provision of the Contract, is sufficient cause for termination under the provisions of the Contract.

Article 6.9 Insurance

As a prerequisite to execution of the Contract, the Contractor shall obtain all insurance required under this Article. The Contractor shall maintain this insurance until the Final Acceptance Date. The Contractor shall file with the Purchasing Officer as verification of insurance a certificate of insurance on the forms furnished or otherwise approved form, showing the type and amounts of insurance, the policy number, and expiration date. The certificate must be signed by an authorized representative of the insurance company. Each certificate of insurance shall state that the insurance company will provide written notice in accordance with policy requirements to the Engineer and the Risk Manager of the Municipality of any material change, cancellation, or non-renewal of the insurance policies. All General Liability and Automobile Liability insurance policies required under this Article

shall name the Municipality as an additional insured for the purposes of this Project and shall contain a waiver of subrogation against the Municipality.

The Contractor shall provide the following types of insurance:

Workers' Compensation	Minimum Limits
$500,000 Employer's Liability and Worker's Compensation as required by Alaska State Workers Compensation Statutes.	$500,000

Commercial General Liability	Minimum Limits
Bodily Injury and Property Damage Liability Premises Operations including explosion, collapse and underground; Products and Complete Operations; Broad Form Property Damage; Blanket Contractual; Personal Injury Owner's/Contractor's Protection	$1,000,000 Combined Limit Each Occurrence and $2,000,000 Aggregate

Commercial Automobile Liability	Minimum Limits
Bodily Injury and Property Damage, including all owned, hired and non-owned automobiles	$1,000,000 Combined Limit per Accident

When specified in the Special Provisions the Contractor shall provide the following additional coverages:

	Minimum Limits
Federal Longshoremen and Harbor Workers Compensation Act Federal Maritime	Statutory
Liability Law (Jones Act)	$1,000,000
Builder's Risk	Total Contract Amount

NOTICE TO "OUT OF STATE" CONTRACTORS

A Certificate of Insurance for Alaska Worker's Compensation, or an "other states" endorsement on Contractor's home state Worker's Compensation policy, is required prior to execution of a Contract or commencement of any Contract performance, if any in-state visits or Work is required or anticipated.

Article 6.10 Indemnification

To the fullest extent permitted by law, the Contractor shall indemnify, defend, and hold harmless the Municipality and the Engineer and their agents and employees from and

against all claims, damages, losses and expenses including attorneys' fees arising out of or resulting from the performance of the Work, provided that any such claim, damage, loss or expense is (1) attributable to bodily injury, sickness, disease, death or personal injury, or to injury to or destruction of tangible property including the loss of use resulting therefrom, and (2) caused in whole or in part by any negligent act or omission of the Contractor, any Subcontractor, anyone directly or indirectly employed by any of them or anyone for whose acts any of them may be liable, regardless of whether or not it is caused in part by a party indemnified hereunder.

In any and all claims against the Municipality or the Engineer or their agents or employees by any employee of the Contractor, any Subcontractor, anyone directly or indirectly employed by any of them, or anyone for whose acts any of them may be liable, the indemnification obligation under this Article shall not be limited in any way by any limitation on the amount or type of damages, compensation or benefits payable by or for the Contractor or any Subcontractor under Worker's Compensation acts, disability benefit acts, or other employee benefit acts.

Article 6.11 Claims by Workmen, Suppliers, and Subcontractors

In the event the Contractor or any Subcontractor fails, neglects, or refuses to make prompt and full payment for labor, services, materials, supplies, or provisions furnished by any person in connection with the Work, the Owner may withhold the amount due from the Contractor's progress payments provided that an affidavit of claim on the form furnished is filed with the Engineer. The withholding by the Owner does not relieve the Contractor or his Surety from their obligations with respect to the payment of such claims. Sums withheld from progress payments shall be disbursed pursuant to Section 10.07 Article 7.6 - Payment of Claimants.

Article 6.12 Certified Payroll

The Contractor shall file with the Alaska Department of Labor, Wage and Hour Administration, Labor Standards and Safety Division, a certified payroll, as required and at such frequency as required by the State of Alaska.

Article 6.13 Lawsuits

If a lawsuit is filed by the Contractor or his Surety against the Municipality or by the Municipality against the Contractor or his Surety, the suit shall be commenced in the Third Judicial District in Anchorage, Alaska.

If one of the questions at issue is the satisfactory performance of the Work by the Contractor, and should the appropriate Court decide that the Work of the Contractor was unsatisfactory, then the Contractor or his Surety shall reimburse the Owner for all legal and all other expenses incurred by the Owner because of the lawsuit as may be allowed and set by the Court. Further, it is agreed that the Owner may deduct such costs from any sum or sums then due or that may become due the Contractor under the Contract.

If any clause or condition of the Contract is held as a matter of law to be unenforceable or unconscionable, the remainder of the Contract shall be enforceable without such clause.

Article 6.14 Preference to Local Labor

Where applicable, the Contractor shall comply with the provisions of AS 36.10 requiring employment preference for Alaska residents.

Article 6.15 State of Alaska Prevailing Wage Scale

Where applicable, the Contractor shall comply with AS 36.5 for the payment of prevailing wages to their employees.

If the Contract contains State of Alaska wage rates and a Federal Wage Decision, the Contractor and all Subcontractors shall comply with both wage decisions. The Contractor and all Subcontractors shall be responsible for paying the higher pay rate between the state and federal wage decisions. Additionally, the Contractor and all Subcontractors shall be responsible for providing certified payrolls to both the Engineer and the State of Alaska, Department of Labor, Wage and Hour Division on a weekly basis utilizing the appropriate agency's form(s).

Article 6.16 Nondiscrimination

The Contractor shall not discriminate against any employee or applicant for employment on any basis prohibited by law. The Contractor shall take affirmative action to ensure that applicants are employed and that employees are treated during employment without regard to any attribute protected by law. Such action shall include, without limitation, employment, upgrading, demotion or transfer, recruitment or recruiting advertising, lay-off or termination, rates of pay or other forms of compensation, and selection for training including apprenticeship. The Contractor agrees to post in conspicuous places, available to employees and applicants for employment, notices setting forth thier rights with regard to employment discrimination.

The Contractor shall state, in all solicitations or advertisements for employees for the Work, that all qualified applicants will receive consideration for employment without regard to any attribute protected by law.

The Contractor shall comply with any and all reporting requirements which the Anchorage Office of Equal Employment Opportunity Contract Compliance may establish by regulation.

The Contractor shall include the provisions of this Article in every subcontract or purchase order under the Contract, so as to be binding upon every such Subcontractor or vendor of the Contractor under the Contract.

Article 6.17 Rights and Remedies

The duties and obligations of the Contractor imposed by the Contract Documents and the rights and remedies of the Owner available thereunder shall be in addition to and not a

limitation of any duties, obligations, rights, and remedies otherwise imposed or available by law.

The failure of the Owner or the Engineer to insist in any one or more instances upon the strict performance of any one or more of the provisions of the Contract, or to exercise any right herein contained or provided by law, shall not be construed as a waiver or relinquishment of the performance of such provision or right(s) or of the right to subsequently demand such strict performance or exercise such right(s), and the rights shall continue unchanged and remain in full force and effect.

Article 6.18 Payment of Taxes

As a condition of performance of the Contract, the Contractor shall pay all municipal taxes incurred by the Contractor. Satisfactory performance of this paragraph is a condition precedent to payment by the Municipality under the Contract.

SECTION 10.07 MEASUREMENT AND PAYMENT

Article 7.1 Method of Measurement

All Work completed under the Contract shall be measured by the Engineer according to United States standard measures, unless otherwise stated in the Bidding Documents.

When any vehicle delivers to the project classified fill or backfill of any kind, bedding material, leveling course, pavement materials, or any other material measured by weight, the driver of the vehicle shall give to the inspector a legible "original" computer-generated or machine-printed weight ticket with the following information:

1. Vehicle identification number.
2. License number & associated trailer license number(s).
3. Tare weight of the vehicle(s).
4. Gross weight of the loaded vehicle(s) as registered on the scale.
5. Maximum allowable vehicle weight (MAVW) or legal gross weight of the vehicle(s) as permitted by AMC 9.46.090 or AMC 9.46.100.
6. Sequential ticket number, date, time of weight, pay item in words, and project location.
7. Bid Schedule and Number of Item
8. Pit location and name of scale operator.

The Owner shall not be required to pay for that portion of the load in excess of the legal gross weight.

Vehicle(s) shall be tared a minimum of once daily by the scale operator. The Engineer may request additional tares to be done at any time the scale is operational. The Engineer may also require that he be present when tares are done.

If the Contractor is not providing fill materials from a commercially established material source in the Municipality, and if the Contractor currently does not have at the other approved material source a computer-generated or machine printed weight ticket system, the Contractor shall furnish competent scale operators to weigh all materials measured and paid for on a weight basis. The scale operator(s) shall operate the scale(s) and keep records as directed by the Engineer, including the information as listed in the above seven (7) items. In addition, the scale operator shall keep a scale diary on a project by project basis. The scale diary shall be presented to the Engineer, on a daily basis, certifying that entries in the diary are true and correct for the specific project. The Owner shall make no direct payment to the Contractor for furnishing scale operator(s), equipment, and expendables required, the costs thereof being considered an incidental Contractor obligation. The accuracy of all scales, both private and commercial, is the responsibility of the Contractor. The Contractor shall maintain scales according to the specifications, tolerances and regulations for commercial weighing and measuring devices contained in the National Bureau of Standards, Handbook 44, as adopted by AS 45.75.050(d).

Article 7.2 Scope of Payment

The Contractor shall accept the compensation as set forth in the Contract Documents in full payment for the Work. The Contractor shall do all things necessary to perform and to complete the Work according to the Contract Documents, including but not limited to furnishing all labor, tools, implements, machinery, supplies, materials, water, heat, utilities, transportation, and permits necessary to perform the Work. The Contractor shall be responsible for all loss, damage, or liability arising from the nature of the Work or from the action of the elements or from any unforeseen difficulties which may be encountered. Work paid for under one item shall not be paid for under another item.

The Contract price shall constitute full compensation for furnishing all plant, labor, equipment and materials, and performing all operations required to complete the Work as specified and as shown on the Drawings or otherwise directed. Notwithstanding the omission or mention of any incident or incidental Work, the Contract price and payment shall also constitute full compensation for all Work incident or incidental to completion of the items, unless such Work is otherwise specifically mentioned for separate payment under another bid item. In the event any Work is required by the Contract Documents, but is not identified as being directly incident or incidental to the completion of any Contract item, the Contract price or prices for all enumerated items shall also constitute full compensation of such Work.

In this Section, the terms "construct, furnish, install, erect, place, and prepare," shall be construed to mean that the bid item(s) is/are complete, in place, and approved by the Engineer.

Article 7.3 Advances on Materials

The Contractor may request advance payment for materials to be incorporated in the Work, provided such materials are delivered and stored at the site, or if approved by the Engineer, at another site within the Municipality. The Contractor shall be solely responsible for the protection of these materials. Only the Contractor’s costs of materials (including freight) as verified by invoices, shall be considered for such advance payments by the Owner.

No payment shall be made on any single class of material valued at less than $5,000. No advance payment shall be made for fuels, supplies, forms, lumber, falsework, or other materials, or on temporary structures of any kind which will not become an integral part of the finished construction. Retainage shall not be withheld for advance payment for materials to be incorporated in the Work. However, once the materials have been incorporated in the Work and payment is requested the retainage in Article 7.5 - Progress Payments, shall apply.

The Contractor shall make available to the Engineer evidence of payment for the materials for which he is requesting advances, insurance to assure replacement if lost, stolen or damaged, and other information the Engineer may request.

Article 7.4 Change Order Compensation Adjustments

Each Change Order Proposal shall include a clear summary of the Contract requirements; the reason for the requested change; a description of the change and whether additional time and/or other compensation is requested or credit offered to the Owner. Unless formalized by an executed Change Order, any and all increased costs or delays resulting directly or indirectly from an unapproved Change Order Proposal shall be borne solely by the Contractor.

Any compensation paid in conjunction with the terms of a Change Order shall constitute total compensation due the Contractor for the Work or alteration defined in the Change Order. By signing the Change Order, the Contractor acknowledges that the stipulated compensation includes payment for the Work or alteration plus all payment for the interruption of schedules, extended overhead, delay or any other impact claim or consequential effects and, by such signing, specifically waives any reservation or claim for additional compensation with respect to the subject of the Change Order.

A. Negotiated Changes

When extra Work is ordered by the Engineer to be performed on a negotiated unit or lump sum basis, the Contractor shall be required to submit a properly itemized Change Order Proposal covering all the additional Work and/or Work to be deleted. The proposal shall be itemized for the various components of Work and segregated by labor, material, and equipment costs in a format satisfactory to the Engineer. Each proposal shall include similar itemized costs for all subcontractors, regardless of tier. The labor, material and equipment components of each proposal shall include the following:

1. Labor

Labor costs shall include the direct hourly cost of labor stated on the certified payroll for each labor classification plus other direct labor costs including, but not limited to, FICA, Workers' Compensation, ESC, and public liability and property damage insurance when premiums are based on a percentage of payroll. The labor costs shall include only those direct labor hours required to perform the changed Work for workers and working foremen. Supervision above the level of working foremen (such as general foremen, superintendents, and project managers, etc.) shall not be included in labor costs and shall be considered to be included in the Overhead and Profit Markup as described hereafter in this Article.

2. Materials

Costs for materials and supplies, including freight, shall be based on the net actual cost of the material and supplies required to perform the changed Work, as verified by appropriate vendor and third party invoices. Material costs shall reflect cost reductions available to the Contractor due

to trade discounts, volume rebates, and price reductions for prompt payments, if applicable. Material costs must be itemized to display the unit price for each specific item incorporated into the Work

3. Equipment

Time for both owned and rented equipment shall be estimated to the nearest one-quarter hour for purposes of computing compensation to the Contractor for equipment utilized under these rates.

The equipment rates for both owned and rented equipment as determined below shall be full compensation for providing the required equipment and no additional compensation shall be made for other costs such as, but not limited to, fuels, lubricants, replacement parts or maintenance. Cost of repairs, both major and minor, as well as charges for mechanic's time utilized in servicing equipment to ready it for use prior to moving to the project and similar charges shall not be allowed.

When it is necessary to obtain equipment from sources beyond the project limits at the request of Owner exclusively for changed Work, the actual cost of transferring the equipment to the site of the Work and return shall be allowed as an additional item of expense. Where the move is made by common carrier, the move-in allowance shall be limited to the amount of the freight bill or invoice. If the Contractor hauls the equipment with his own forces, the allowance shall be limited to the rental rate for the hauling unit plus operator wages. Move-in allowance shall not be made for equipment brought to the project for changed Work which is subsequently retained on the project and utilized for completion of Contract items.

a. Contractor Owned Equipment (over $500)

For any Contractor-owned machinery or special equipment, the Contractor shall include costs for the rental rates in the current edition and appropriate volume of the "Rental Rate Blue Book For Construction Equipment," (hereinafter referred to as the "Blue Book"), published by Dataquest, Inc. These rates do not apply to equipment or tools valued at less than five hundred dollars ($500). Hourly rental rates shall be determined as follows:

1. The established hourly rental rate shall be equal to the monthly rate for the basic equipment plus the monthly rate for applicable attachments as set forth in the “Blue Book”, necessary to perform the Work, both divided by 176, all multiplied by the area adjustment factor, plus the estimated hourly operating costs listed in the Blue Book.

2. The area adjustment factors shall be applied to those sections in the "Blue Book" containing an area adjustment map.

3. The "Equipment Life" adjustment factor sections shall not apply.

For Contractor-owned equipment not listed in the “Blue Book”, the Contractor shall receive a rental rate as agreed in writing between the parties before the changed Work is begun. If agreement cannot be reached, the Engineer reserves the right to establish a rate based on similar equipment shown in the “Blue Book” or based on prevailing commercial rates in the area.

b. Rented Equipment (over $500)

Costs for equipment brought to the Work site and rented or leased specifically for Work required under this Section shall be included at the actual rental rate and supported by invoices from the equipment vendor. Rental rates for equipment shall be consistent with prevailing rates for similar equipment in the area.

Costs for rented equipment previously on the site and utilized specifically for changed Work shall be included at the actual rental rate and supported by invoices from the equipment vendor, provided the hourly rate for this equipment shall not be greater than the hourly rate paid for that same equipment for other Work in the Contract.

c. Equipment less than $500

Equipment, tools, and other specialty items valued at less than $500 are included in Profit and Overhead and no separate payment shall be made.

4. Allowances for Profit and Overhead

Contractor Change Order Proposals for the performance of changed Work shall include all direct costs for labor, materials, and rented equipment as described above. No profit or overhead will be paid for Owned equipment. The Engineer shall review the proposals for reasonableness and adequate detail in order to reach agreement with the Contractor before including allowances as described below:

a. In addition to the direct costs of labor, materials and rented equipment incurred by the Contractor, the Contractor shall be entitled to an allowance for profit and overhead. This allowance shall not exceed twenty percent (20%) of the total direct cost of

labor and materials. The overhead and profit rate for rented equipment is invoice plus fifteen percent (15%).

b. If Work is performed by a subcontractor, the subcontractor actually performing the Work shall be entitled to those allowances for profit and overhead listed above, and each subsequent higher tiered subcontractor or Contractor shall be allowed up to an additional ten percent (10%) markup on the subcontractor's direct costs, up to a maximum of two tiers of subcontractors.

The allowance made in accordance with the terms outlined above shall be complete reimbursement and compensation for all indirect costs associated with changed Work including, but not limited to, job office overhead, home office overhead, project management, superintendents, general foremen, estimating, engineering, detailing, legal, accounting, shop drawings, costs of small tools and small equipment, bond cost, insurance premiums, profits, delay impacts on the rest of the Work and losses of all kinds and other items of cost not specifically designated. No other reimbursement, compensation or payment shall be made for changed Work.

Any allowance made by the Contractor to a Subcontractor, other than specified herein, shall be at the expense of the Contractor.

B. Time and Material Changes

When extra Work is ordered by the Engineer to be performed on a time and materials basis, the Contractor shall be required to perform the extra Work at the actual direct cost for labor, materials and rented equipment plus allowances for profit and overhead as described under the Negotiated Changes clause of this Article. No profit or overhead will be paid for Owned equipment. The amount of the allowance for profit and overhead for Time and Materials changes shall not exceed fifteen percent (15%). In order for payment to occur, the Contractor must document all direct costs in a manner acceptable to the Engineer. The Contractor shall provide daily time sheets with the names of all Contractors employees working on the changed Work, the number of hours each employee works on the changed Work, and a description of the Work performed. In addition, the Contractor shall provide daily records of all equipment used to perform the changed Work showing the number of hours each piece of equipment was used, a description of the Work performed, and the name of the equipment operator. All materials incorporated into the changed Work shall be documented with itemized invoices from vendors and suppliers.

C. Unit Price Changes

When extra Work is ordered by the Engineer to be performed on a unit price basis, payment shall be made for both added quantities and deductive quantities in accordance with those unit prices that have been incorporated into the Contract Documents, unless the Engineer determines there is an alternate method. For changed Work authorized by the Engineer, the Contractor shall submit a Change Order Proposal itemizing the quantities of each item of Work for which there is an applicable unit price. The applicable unit prices shall be applied to the net differences of all quantities of the same item. These unit prices shall be considered to cover all direct and indirect costs of furnishing and installing the item, including all profit and overhead. No additional markup for overhead and profit shall be allowed on unit priced items except where the actual quantity used exceeds one hundred and twenty-five percent (125%) of the estimated quantity. For additional unit price Work performed by subcontractors, each subsequent higher tiered subcontractor or Contractor shall be allowed up to an additional five percent (5%) markup on the subcontractor's direct costs (not including profit and overhead), up to a maximum of two tiers of subcontractors.

D. No Cost Changes

The Engineer shall have authority to order changes in the Work that, at his sole discretion, do not require an adjustment in the Contract amount or an extension of time and are not inconsistent with the intent of the Contract Documents. Such changes shall be effected by written order and shall be binding on the Owner and the Contractor. The Contractor shall carry out such written orders promptly.

If the Contractor claims that such written instructions or orders involve extra costs or an extension of time, it shall make his claim by following the procedures set forth in Article 5.21 - Claims for Additional Compensation. The Contractor shall proceed with the Work as directed by the Engineer while his claim is being evaluated and shall not delay the Work while waiting for a decision.

Article 7.5 Progress Payments

The Contractor shall submit to the Engineer an Application for Payment, on the forms furnished, supported by such data as the Engineer may require substantiating the Contractor's right to payment for Work done during the preceding calendar month. The Engineer shall, within eight (8) days after receipt of the Application for Payment, either approve a Partial Payment Estimate and present it to the Contractor for signature or notify the Contractor in writing his reasons for withholding approval. Approved Partial Payment Estimates shall be received by the Owner within two (2) days after execution by the Contractor. The Owner shall process Partial Payment Estimates and make payment to the Contractor within fifteen (15) days of receipt of the Partial Payment Estimate. If the Owner fails to make payment to the Contractor within thirty (30) days of receipt of the Application for Payment (twenty-one (21) days if the project is funded with State of Alaska grants), the Contractor may, upon seven (7) days written notice to the Owner and Engineer, suspend

the Work. The Contractor shall take every precaution to prevent any damage or unreasonable deterioration of the Work during the time it is suspended. The Engineer may require a schedule of values, or cost breakdown for any lump sum payment Contract item.

For projects where a Performance and Payment Bond is required under Section 10.03, Article 3.5 – Bonds, Insurance, EEO and DBE/WBE Forms, progress payments at one hundred percent (100%) of the estimated value of the Work accomplished, less all previous payments or for authorized withholdings as specified below, shall be made to the Contractor and no deductions shall be made, except as provided under the withholding provisions of this Article.

No interest shall accrue and no interest shall be paid on sums which are withheld as provided for hereinafter.

Withholding: The Engineer may withhold funds from a progress payment for any of the following reasons:

1. Defective Work;

2. Claims made directly against the Municipality alleging an act or omission on the part of the Contractor, his employees, his agents, or Subcontractors in connection with the Work;

3. Damage to the Municipality;

4. Reimbursements for Work done by the Owner because of any failure by the Contractor or Subcontractor to carry out the Work in accordance with the Contract Documents;

5. Uncompleted incidental Work, not earning direct payment, including but not limited to testing, cleanup, updating of progress schedules, preparation of Record Documents and Operations and Maintenance Manuals.

6. Liquidated damages;

7. Claims by Subcontractors, suppliers, laborers, or the Alaska Department of Labor;

8. If the Contractor or his/her Subcontractor fails to file reports with the Municipality of Anchorage Office of Equal Opportunity as required by AMCR 7.50.004, AMCR 7.50.005, and by 7.60.004 in a timely manner, monies shall be withheld in the amount of ten percent (10%) of the amount due the Contractor until such time as the reports have been properly filed.

The amount of any withholding for items one (1) through five (5) above shall be the reasonable value of the Work or remedy to be accomplished as estimated by the Engineer, without regard to bid amount or cost to the Contractor. The amount of withholding for items

six (6) through eight (8) shall be in accordance with the claimed amount or the applicable Contract provisions.

Progress payments shall not be construed as an acceptance or approval of any part of the Work covered thereby and they shall in no manner relieve the Contractor of responsibility for correcting defective workmanship or material.

The estimates upon which progress payments are based are not represented to be accurate estimates, and all quantities shown therein are subject to correction on any subsequent pay estimate. If the Contractor uses such estimates as a basis for making payment to Subcontractors, Contractor does so at his own risk and Contractor shall bear all loss that may result. All quantities shall be subject to review by the Engineer prior to approval for payment.

The making of any progress payment under the Contract, either before or after the date set for completion of the Work, shall not operate to invalidate any of the provisions of the Contract or to release the Surety.

In addition to certified payroll submittals to the Alaska Department of Labor required under Section 10.06, Article 6.12 – Certified Payroll, Contractor shall attach certified payrolls to each request for payment or partial payment. Certified payrolls attached to Contractor's request for payment or partial payment shall cover all pay periods in Contractor's request for payment or partial payment.

Article 7.6 Payment of Claimants

By submitting a request for Final Payment, the Contractor acknowledges and certifies that all actual or potential claims or issues have been either resolved or withdrawn and that there are no such claims or issues outstanding.

Any claim received by the Engineer against the Contractor or Subcontractors from any materialmen, laborer, supplier, Subcontractor, or the Alaska Department of Labor will be forwarded to the Contractor by certified mail as soon as practical following receipt by the Engineer. Within twenty-one (21) days after the Contractor's receipt of the said notice, the Contractor shall notify the Engineer in writing by Certified Mail that the said claim is contested or provide proof that the claim has been satisfied. If the Contractor contests the claim, the Contractor shall describe in detail how the Subcontractor was paid or why the Subcontractor should not be paid and furnish to Owner the completed three-point statement form described hereafter. If the Contractor does not respond during the time allotted above, this lack of notice shall constitute consent by the Contractor to have the Owner pay the claim from the earnings of the Contractor. The Owner shall not be responsible to the Contractor if the Contractor subsequently contests the validity of the claim.

Sums withheld pursuant to disputed claims shall not be paid to the claimant except where compelled by legal authority. Such sums may be paid to the Contractor upon the filing of a three-point statement by the Contractor and his Surety on the form furnished by the Engineer stating that: (1) the Contractor contests the validity of the claim; (2) that the

Surety acknowledges responsibility for the payment of the claim in the event it is valid and; (3) that the Contractor and the Surety specifically agree to hold the Municipality harmless for making payment to the Contractor of the sums withheld.

In the event that the Contractor revokes consent to pay a claimant as provided herein and refuses to execute the three-point statement form referenced above, the Municipality may institute an interpleader action in Superior Court, Third Judicial District, and all Court costs and attorney's fees incurred by the Municipality shall be paid by the Contractor or the Surety. Claimants are not intended beneficiaries of this Article and shall have no recourse against the Municipality for any failure to pay claims from sums withheld from the Contractor.

Article 7.7 Final Payment

Upon completion of the Work and issuance of a Certificate of Completion by the Engineer, the Contractor shall submit a request for Final Payment and the following submittals, as applicable, to the Engineer. No Final Payment shall be made until the Engineer has received and approved the following submittals:

A. Alaska Department of Labor (DOL)-issued written notification of compliance with AS 36.05.045;

B. Other contractually required documents as noted in the Contract; and

C. A notarized Certificate of Compliance in the form substantially as follows:

> I (we) hereby certify that all Work has been performed and materials supplied in accordance with the Contract Documents for the above Work, that not less than the prevailing rates of wages as required by the State Statute have been paid to laborers, workmen, and mechanics, that all payroll taxes have been paid, and that all claims for material and labor and other services performed in connection with these Contract Documents have been satisfied.

There shall be deducted from the final payment any sums withheld pursuant to Article 7.6 - Payment of Claimants.

Article 7.8 Correction of Work after Final Acceptance Date

Placement of the Project on Warranty shall not relieve the Contractor of his responsibility for paying all costs resulting from defects in materials or workmanship supplied under the terms of the Contract, and for correction of those defects, for a period of one year following the Final Acceptance Date. The Owner shall give notice of observed defects within a reasonable time. The Contractor shall initiate corrective action within five (5) days after written notification from the Owner or the Owner shall make other provisions to complete the Work and all costs shall be paid by the Contractor.

SECTION 10.08 FORMS

Article 8.1 Current Forms

The following forms are provided as reference. Electronic versions of the form are available at the Municipality of Anchorage website or from the Engineer.

Article 8.2 Submittal Transmittal

The Submittal Transmittal form is provided on page 71.

Article 8.3 Request for Information Form

The Request for Information form is provided on page 72.

Article 8.4 Substitution Request Form

The Substitution Request form is provided on page 73.

Article 8.5 Deviation Request Form

The Deviation Request form is provided on page 74.

SUBMITTAL TRANSMITTAL

PROJECT _____ SUBMITTAL NO. TRANS-_____

CONTRACTOR _____ CONTRACT NO. _____

ORIGINATOR _____ PM&E NO. _____

DATE SUBMITTED _____ DRAWING NO. _____ SPEC. SECTION _____

TO: Municipality of Anchorage
Project Management and Engineering
4700 Elmore Road
Anchorage, AK 99507

SHEET _____ OF _____

ATTENTION: _____

ITEM _____

SUPPLIER/CONTRACTOR

☐ Original Submittal ☐ 3rd ☐ Other

☐ 2nd ☐ 4th

No.	DETAILED DESCRIPTION (Provide Itemized List of Contents in this Submittal)	REVIEW ACTION: COPIES DISTRIBUTED	NO EXCEPTION TAKEN A	MAKE CORRECTIONS AS NOTED B	AMEND AND RESUBMIT C	REJECTED RESUBMIT D	COPIES RETURNED	NOTES ATTACHED

Complete either (a) or (b), following:

☐ (a) We have verified that the material or equipment contained in this submittal meets all the requirements specified or shown (no exceptions), and the submittal is required by the Contract Documents.

☐ (b) We have verified that the material or equipment contained in this submittal meets all the requirements specified or shown, except for the following deviations (list deviations; attach a separate sheet as necessary), and the submittal is required by the Contract Documents.

Corrections or Comments made relative to submittals during this review do not relieve the Contractor from compliance with the requirements of the Drawings and Specifications. This submittal is only for review of general conformance with the design concept of the Project and general compliance with the information given in the Contract Documents. The Contractor is responsible for confirming and correlating all quantities and dimensions; selecting fabrication processes and techniques of construction; coordinating his work with that of other trades; and performing his work in a safe and satisfactory manner.

CONTRACTOR _____ (Signature)

ENGINEER _____ (Signature)

ROUTING	*RECEIVED BY (NAME/COMPANY)*	*DATE RECEIVED*	*DATE FORWARDED*	*COMMENTS*
PROJ ENGINEER				
CONTRACTOR				

REQUEST FOR INFORMATION (RFI)

PROJECT _____ REQUEST NO. RFI-_____

CONTRACTOR _____ CONTRACT NO. _____

ORIGINATOR _____ PM&E NO. _____

DATE SUBMITTED _____ DRAWING NO. _____ SPEC. SECTION _____

TO: Municipality of Anchorage
Project Management and Engineering
4700 Elmore Road
Anchorage, AK 99507

SHEET _____ OF _____

ATTENTION:

DESCRIPTION OF REQUEST FOR INFORMATION

CONTRACTOR _____ DATE _____
(Signature)

RESPONSE REQUESTED

RESPONSE TO REQUEST FOR INFORMATION

DIRECTION

- ☐ Requested Information/Clarification Provided.
- ☐ Submit a Change Order Proposal and all associated justification/documentation.
- ☐ _____

RESPONSE BY _____ DATE _____
(Signature)

ROUTING	*RECEIVED BY (NAME/COMPANY)*	*DATE RECEIVED*	*DATE FORWARDED*	*COMMENTS*
PROJ ENGINEER				
CONTRACTOR				

SUBSTITUTION REQUEST

PROJECT _____ SUBSTITUTE NO. SR- _____

CONTRACTOR _____ CONTRACT NO. _____

ORIGINATOR _____ PM&E NO. _____

DATE SUBMITTED _____ DRAWING NO. _____ SPEC. SECTION _____

TO: Municipality of Anchorage
Project Management and Engineering
4700 Elmore Road
Anchorage, AK 99507

SHEET _____ OF _____

ATTENTION:

SPECIFIED ITEM

SECTION	PAGE	PARAGRAPH	DESCRIPTION

PROPOSED SUBSTITUTION _____

JUSTIFICATION _____

Attached data includes product description, Specifications, Drawings, photographs and performance and test adequate for evaluation of the request. Applicable portions of the data are clearly identified.

The undersigned states that the following paragraphs, unless modified in attachments, are correct:

1. The proposed substitution does not affect dimensions shown on Drawings and will not require any change in the Contract Documents.
2. The undersigned will pay without reimbursement for construction costs and changes to the design including engineering and detailing caused by the requested substitution which is estimated to be $.
3. The proposed substitution will have no adverse affect on other contractors, the construction schedule (specifically the date of substantial completion), or specified warranty requirements.
4. Maintenance and service parts will be locally available for the proposed substitution.
5. The incorporation or use of the substitution in connection with the work is not subject to payment of any license fee or royalty.

The undersigned further states that the function, appearance, and quality of the Proposed Substitution are equivalent or superior to the Specified Item.

Submitted by CONTRACTOR

Signature _____

Firm _____

_____

Date _____

Telephone _____

Attachments _____

_____

_____

_____

Reviewed by ENGINEER

☐ Accepted

☐ Accepted as Noted:

☐ Not Accepted

☐ Returned without Review as Noted:

By _____

Title _____

Date _____

Remarks _____

_____

ROUTING	*RECEIVED BY (NAME/COMPANY)*	*DATE RECEIVED*	*DATE FORWARDED*	*COMMENTS*
PROJ ENGINEER				
CONTRACTOR				

DEVIATION REQUEST

PROJECT _____ REQUEST NO. DR-_____

CONTRACTOR _____ CONTRACT NO. _____

ORIGINATOR _____ PM&E NO. _____

DATE SUBMITTED _____ DRAWING NO. _____ SPEC. SECTION _____

TO: Municipality of Anchorage
Project Management and Engineering
4700 Elmore Road
Anchorage, AK 99507

SHEET _____ OF _____

ATTENTION: _____

DESCRIPTION OF DEVIATION REQUEST

A. Original Contract Requirements:

B. Reason for Deviation Request:

C. Proposed Deviation:

D. Any Changes in Contract Time or Cost: ☐ NO ☐ YES

CONTRACTOR _____ DATE _____
(Signature)

RESPONSE REQUESTED

RESPONSE TO DEVIATION REQUEST

DIRECTION

☐ Approved ☐ Approved as Noted

☐ Disapproved

RESPONSE BY _____ DATE _____
(Signature)

ROUTING	*RECEIVED BY (NAME/COMPANY)*	*DATE RECEIVED*	*DATE FORWARDED*	*COMMENTS*
PROJ ENGINEER				
CONTRACTOR				

MUNICIPALITY OF ANCHORAGE
STANDARD SPECIFICATIONS

DIVISION 20
EARTHWORK

STANDARD CONSTRUCTION SPECIFICATIONS FOR
EARTHWORK
DIVISION 20
INDEX

SECTION 20.01	GENERAL	1
Article 1.1	Scope of Work	1
Article 1.2	Definitions	1
Article 1.3	Applicable Standards	2
Article 1.4	Equipment	3
Article 1.5	Compaction Standards	3
Article 1.6	Subsurface Investigation	4
Article 1.7	Weather Limitations	5
Article 1.8	Underground Utilities	5
Article 1.9	Contaminated Material	5
SECTION 20.02	STORM WATER POLLUTION PREVENTION PLAN	6
Article 2.1	General	6
Article 2.2	Definitions and Web References	6
Article 2.3	Plan and Permit Submittals	9
Article 2.4	Personnel Qualifications and Authority	10
Article 2.5	Control and Prevention Plan Contents	11
Article 2.6	Materials	14
Article 2.7	Construction	14
Article 2.8	SWPPP Inspections, Reports and Amendments	16
Article 2.9	Measurement	19
Article 2.10	Basis of Payment	19
SECTION 20.03	EXPLORATORY TEST PITS	20
Article 3.1	General	20
Article 3.2	Materials	20
Article 3.3	Construction	20
Article 3.4	Measurement	20
Article 3.5	Basis of Payment	20
SECTION 20.04	CLEARING AND GRUBBING	21
Article 4.1	General	21
Article 4.2	Construction	21
Article 4.3	Measurement	21
Article 4.4	Basis of Payment	21
SECTION 20.05	CLEARING	22
Article 5.1	General	22
Article 5.2	Construction	22
Article 5.3	Measurement	22
Article 5.4	Basis of Payment	23

SECTION 20.06 REMOVAL OF TREES 24
Article 6.1 General 24
Article 6.2 Construction 24
Article 6.3 Measurement 24
Article 6.4 Basis of Payment 24

SECTION 20.07 REMOVAL OF SIDEWALK AND CONCRETE APRON 25
Article 7.1 General 25
Article 7.2 Construction 25
Article 7.3 Measurement 25
Article 7.4 Basis of Payment 25

SECTION 20.08 REMOVAL OF CURB AND GUTTER 26
Article 8.1 General 26
Article 8.2 Construction 26
Article 8.3 Measurement 26
Article 8.4 Basis of Payment 26

SECTION 20.09 REMOVAL OF PAVEMENT 27
Article 9.1 General 27
Article 9.2 Construction 27
Article 9.3 Measurement 27
Article 9.4 Basis of Payment 28

SECTION 20.10 EXCAVATION FOR TRAFFIC WAYS 29
Article 10.1 General 29
Article 10.2 Survey Stakes 29
Article 10.3 Miscellaneous 29
Article 10.4 Unusable and Usable Excavation 30
Article 10.5 Utilization or Disposal of Excavated Material 30
Article 10.6 Excavation 31
Article 10.7 Measurement 31
Article 10.8 Basis of Payment 32

SECTION 20.11 GRADING EXISTING SURFACES 33
Article 11.1 General 33
Article 11.2 Construction 33
Article 11.3 Measurement 33
Article 11.4 Basis of Payment 33

SECTION 20.12 DEWATERING 34
Article 12.1 General 34
Article 12.2 Materials 34
Article 12.3 Construction 34
Article 12.4 Measurement 35
Article 12.5 Basis of Payment 35

SECTION 20.13 TRENCH EXCAVATION AND BACKFILL 36
Article 13.1 General 36
Article 13.2 Trench Excavation and Backfill - Description 36
Article 13.3 Construction 37
Article 13.4 Measurement 39
Article 13.5 Basis of Payment 40

SECTION 20.14 TRENCH EXCAVATION, BACKFILL AND COMPACTION FOR SERVICE CONNECTIONS 41
Article 14.1 General 41
Article 14.2 Construction 41
Article 14.3 Measurement 43
Article 14.4 Basis of Payment 43

SECTION 20.15 FURNISH TRENCH BACKFILL 44
Article 15.1 General 44
Article 15.2 Construction 44
Article 15.3 Measurement 44
Article 15.4 Basis of Payment 44

SECTION 20.16 FURNISH BEDDING MATERIAL 45
Article 16.1 General 45
Article 16.2 Materials 45
Article 16.3 Construction 46
Article 16.4 Measurement 47
Article 16.5 Basis of Payment 47

SECTION 20.17 FURNISH FILTER MATERIAL 48
Article 17.1 General 48
Article 17.2 Materials 48
Article 17.3 Construction 48
Article 17.4 Measurement 48
Article 17.5 Basis of Payment 49

SECTION 20.18 DRAIN/FILTER ROCK 50
Article 18.1 General 50
Article 18.2 Materials 50
Article 18.3 Construction 50
Article 18.4 Measurement 50
Article 18.5 Basis of Payment 51

SECTION 20.19 FURNISH FOUNDATION BACKFILL 52
Article 19.1 General 52
Article 19.2 Materials 52
Article 19.3 Construction 52
Article 19.4 Measurement 52
Article 19.5 Basis of Payment 52

SECTION 20.20 UNCLASSIFIED FILL AND BACKFILL 53
Article 20.1 General 53
Article 20.2 Material 53
Article 20.3 Construction 53
Article 20.4 Measurement 53
Article 20.5 Basis of Payment 53

SECTION 20.21 CLASSIFIED FILL AND BACKFILL 54
Article 21.1 General 54
Article 21.2 Material 54
Article 21.3 Construction 56
Article 21.4 Measurement 58
Article 21.5 Basis of Payment 58

SECTION 20.22 LEVELING COURSE 59
Article 22.1 General 59
Article 22.2 Material 59
Article 22.3 Construction 60
Article 22.4 Measurement 61
Article 22.5 Basis of Payment 62

SECTION 20.23 COBBLES 63
Article 23.1 General 63
Article 23.2 Materials 63
Article 23.3 Construction 63
Article 23.4 Measurement 63
Article 23.5 Basis of Payment 63

SECTION 20.24 RIPRAP 64
Article 24.1 General 64
Article 24.2 Materials 64
Article 24.3 Construction 64
Article 24.4 Method of Measurement 65
Article 24.5 Basis of Payment 65

SECTION 20.25 GEOTEXTILE FABRIC 66
Article 25.1 Description 66
Article 25.2 Materials 66
Article 25.3 Construction 70
Article 25.4 Method of Measurement 72
Article 25.5 Basis of Payment 72

SECTION 20.26 ROADWAY INSULATION 74
Article 26.1 General 74
Article 26.2 Materials 74
Article 26.3 Construction 74
Article 26.4 Measurement 75
Article 26.5 Basis of Payment 75

SECTION 20.27 DISPOSAL OF UNUSABLE OR SURPLUS MATERIAL 76
Article 27.1 General 76
Article 27.2 Construction 76
Article 27.4 Measurement 76
Article 27.5 Basis of Payment 77

SECTION 20.28 RECONSTRUCT DRIVEWAY 78
Article 28.1 Description 78
Article 28.2 Materials 78
Article 28.3 Construction 78
Article 28.4 Measurement 79
Article 28.5 Basis of Payment 79

SECTION 20.29 PIPE CASING 80
Article 29.1 General 80
Article 29.2 Materials 80
Article 29.3 Construction 80
Article 29.4 Measurement 80
Article 29.5 Basis of Payment 80

SECTION 20.30 SHORING, SHEETING AND BRACING/SHORING AND SHEETING LEFT IN THE TRENCH AND PORTABLE 81
Article 30.1 General 81
Article 30.2 Materials 81
Article 30.3 Construction 81
Article 30.4 Measurement 81
Article 30.5 Basis of Payment 82

STANDARD CONSTRUCTION SPECIFICATIONS FOR EARTHWORK DIVISION 20

SECTION 20.01 GENERAL

For the purposes of this Division, the terms “unsuitable” and “unusable” are equivalent when used as a description of a type of material and may be used interchangeably.

Article 1.1 Scope of Work

The Work covered by this Division consists of providing all plant, labor, equipment, supplies, material, transportation, handling, and storage, and performing all operations pertaining to the: 1) construction of subbase for parking lots, streets, alleys, curbs, gutters, sidewalks and bike trails, 2) construction for all trench excavation, backfill, bedding, and foundation material for utility installation; and 3) excavation and backfill for building structures and retaining walls.

Article 1.2 Definitions

A. **Backfill**

Material placed in an excavated area.

B. **Bedding**

Ground or support in which pipe is laid.

C. **Borrow**

Material used as fill and/or backfill which is obtained from a source other than required excavation.

D. **Compaction**

Tamping by hand or machine to achieve required density in soils.

E. **Disposal Site**

Any area where waste, unsuitable, unusable or surplus material from construction is placed. Contractor provided disposal sites are delineated in Division 10, Section 10.04, Article 4.9 – Disposal Sites.

F. **Excavation**

Area or material removed to provide a suitable base for improvement.

G. **Fill**

Fill is considered the material placed above the original or natural ground line.

H. **Leveling Course**

Leveling course is compacted material placed above the subbase and below the finishing surface of the improvement.

I. **Non-Frost-Susceptible Material**

Non-organic soil containing less than three percent (3%) by weight of grains smaller than .02 mm obtained from minus three inches (-3") material.

J. **Service Connection**

Any connection from a main line utility or storm drain to a property line for the purpose of providing service to an individual property

K. **Subbase**

The subbase is compacted material placed above the subgrade and below the leveling course.

L. **Subgrade or Bottom Excavation**

The subgrade is material below the bottom of excavation and upon which the subbase material is placed.

M. **Trench**

Any excavation for a utility or drainage system.

N. **Unsuitable or Unusable Material**

Unsuitable or unusable material may consist of any material which is, in the opinion of the Engineer, inadequate for use in the proposed construction.

Article 1.3 Applicable Standards

The latest revision of the following standards of the American Society for Testing and Materials (ASTM) and the American Association of State Highway Transportation Officials (AASHTO) are hereby made a part of these specifications:

ASTM C-29	Test for Unit Weight of Aggregate
ASTM C-117	Test for Materials Finer than No. 200 Sieve in Aggregates by Washing
ASTM C-131	Test for Resistance to Abrasion of Small Size Coarse Aggregate by Use of the Los Angeles Machine

ASTM C-136	Test for Sieve or Screen Analysis of Fine and Coarse Aggregates
ASTM D-422	Test for Particle Size Analysis of Soil
ASTM D-424	Test for Plastic Limit and Plasticity Index of Soils
AASHTO M-147	Materials for Aggregate and Soil-Aggregate Subbase, Base, and Surface Courses
AASHTO T-180-D	Test for Moisture-Density Relations of Soils
AASHTO T-205	Test for Field Determination of Density of Soil In-Place
AASHTO T-238	Test for Density of Soil In-Place by Nuclear Method.

Article 1.4 Equipment

All equipment, tools, and machines used in the performance of the Work covered by these Specifications shall be subject to the approval of the Engineer and shall comply with all applicable safety requirements. All equipment used on the project shall be adequately maintained and shall be the proper equipment for the Work being accomplished so as to produce the result required by the Contract Documents.

Article 1.5 Compaction Standards

The required density of fill and backfill shall meet the requirements as outlined in Section 20.21 - Classified Fill and Backfill. In areas outside of road rights-of-way, the density shall be as required by the Contract Documents or as directed by the Engineer.

Where compaction density is specified, the maximum density shall be determined in accordance with the current requirements of AASHTO Standard Method T-180-D.

The Diameter of the test mold in AASHTO T-180 Method D limits the size of particles which may be included in the test to that passing the three-quarter inch (3/4") sieve. In those instances where the particles are retained on the three-quarter inch (3/4") sieve, a correction must be applied to the standard laboratory density prior to calculating the percent compaction. To expedite field result the plus three-quarter inch (3/4") material may be sieved wet and the weight computed as a percent of the total weight of the material from the hole. The corrected laboratory density shall be computed in each instance by the formula:

$$\text{Corrected Lab Density} = \frac{62.4}{\frac{A}{C} + \frac{62.4(B)}{r\,D}}$$

Where: A = Percent by weight of original material retained on the 3/4-inch sieve, expressed as a decimal.

B = Percent by weight of original material passing the 3/4-inch sieve, expressed as a decimal.

C = Specific gravity of +3/4-inch material (apparent specific gravity) as determined by AASHTO T-85.

D = Uncorrected laboratory density (minimum 3/4-inch material).

r = Coefficient with value depending A, as follows:

for A = 0.18 or less, r = 1.00
A = 0.19 or more, r = 1.036 - 0.2A

Backfill under traffic and building structures and trench backfill in the public rights-of-way from six inches (6") over the top of the pipe to the surface shall be compacted to ninety-five percent (95%) of maximum density, unless otherwise noted and approved by the Engineer.

The backfill material shall be placed in horizontal lifts not exceeding twelve inches (12") in thickness and compacted. Any excavations improperly filled shall be reopened to the depth required for proper compaction, then refilled and compacted at the Contractor's expense. The use of water in excess of the quantity required to obtain specified density (optimum moisture content) to settle or compact the backfill will not be permitted.

Article 1.6 Subsurface Investigation

Information pertaining to subsurface exploration, borings, test pit locations, and other preliminary investigation may appear in the Bidding Documents or be available at selected locations for review by the Bidder. This information was acquired for design purposes only and is not considered adequate for construction.

The soils classifications and geotechnical designations recorded are informational only and represent only those subsurface conditions on the particular date, at the specific location, as indicated on each soils log and on the plans. The ground water levels indicated on the test hole logs and shown on the Drawings were recorded at the time the test holes were performed. These water levels may vary seasonally and are shown for design and informational purposes only. Contractor shall assume responsibility for any conclusions that may be drawn from such information and the conclusions shall not be considered just cause for a claim for additional compensation or contract time extension. Contractor

should obtain and analyze such additional information as the Contractor may feel necessary and shall be responsible for any conclusions drawn from that information.

The Owner does not warrant the correctness of the soils investigation or of any interpretation, deduction, or conclusion given in the report relative to subsurface conditions. The Bidder shall make his own deductions and conclusions as to the nature of the materials to be excavated, the difficulties of making and maintaining the required excavations, the difficulties which may arise from subsurface conditions, and of doing any other Work affected by the subsurface conditions, and shall accept full responsibility therefore.

Article 1.7 Weather Limitations

Unless otherwise authorized by the Engineer, fill and backfill material, base course, and leveling course shall not be placed when the atmospheric temperature is below thirty-five degrees Fahrenheit (35°F). When the temperature falls below thirty-five degrees Fahrenheit (35°F), it shall be the responsibility of the Contractor to protect all areas of completed Work against any detrimental effects. Any areas of Work not completed in accordance with the Contract Documents that are damaged by weather shall be reconditioned, reshaped, and recompacted by the Contractor in conformance with the requirements of the Contract Document without additional cost to the Owner.

Article 1.8 Underground Utilities

The Contractor shall continuously support underground utilities during backfill placement and compaction. During backfill placement and compaction, the Contractor shall place geotextile fabric with a minimum twelve inch (12”) separation from underground utilities, unless directed otherwise by the Engineer.

Article 1.9 Contaminated Material

Unless otherwise noted in the Contract Documents, the Owner is not aware of any contaminated material within the project limits. If such material is encountered, Contractor shall notify the Engineer immediately for direction. Unless the contamination was caused by Contractor’s operation, discovery of contaminated material will be treated as a changed condition per Division 10, Section 10.05, Article 5.18 – Changed Conditions.

SECTION 20.02 STORM WATER POLLUTION PREVENTION PLAN

Article 2.1 General

The Work described in this Section shall consist of providing all labor, equipment, materials, and services to prepare, implement, and maintain a Storm Water Pollution Prevention Plan (SWPPP) for projects that may adversely impact receiving waters or waters of the United States. The type of plan required depends on the area disturbed by the project including the construction site and off-site activities which include, but may not be limited to, material sites, waste disposal sites, borrow and fill sites, and equipment and material storage areas.

For Projects that impact an area greater than five hundred (500) square feet or are deeper than four feet (4'), and less than ten thousand (10,000) square feet, a Type 1 SWPPP is required and the cost of the SWPPP is considered incidental to the Contract and no separate payment shall be made. A Type 2 SWPPP is required for Projects that disturb a project area greater than ten thousand (10,000) square feet and less than one (1) acre. A Type 3 SWPPP is required for all Projects that disturb one or more acres of land.

As a requirement of this Contract, the Contractor shall accept a delegation of authority from the Municipality to act as the Municipality's duly authorized representative for the purpose of overseeing compliance with the APDES Construction Permit at the project site.

Article 2.2 Definitions

Alaska Certified Erosion and Sediment Control Lead (AK-CESCL) - A person who has completed training, testing, and other requirements of, and is currently certified as, an AK-CESCL from an AK-CESCL Training Program (a program developed under a Memorandum of Understanding between the Municipality and others). The Municipality recognizes AK-CESCLs as "qualified personnel" required by the CGP. An AK-CESCL shall be recertified every three years.

Alaska Department of Environmental Conservation (ADEC) - The State agency authorized by EPA to administer the Clean Water Act's National Pollutant Discharge Elimination System (NPDES).

Alaska Pollutant Discharge Elimination System (APDES) - A system administered by ADEC that issues and tracks permits for storm water discharges.

Best Management Practices (BMPs) - Temporary or permanent structural and non-structural devices, schedules of activities, prohibition of practices, maintenance procedures, and other management practices to prevent or minimize the discharge of pollutants to waters of the United States. BMPs also include, but are not limited to, treatment requirements; operating procedures; practices to control site runoff, spillage or leaks; sludge or waste disposal; or drainage from material storage.

Clean Water Act (CWA) - Federal Water Pollution Control Amendments of 1972, as amended (33 U.S.C. 1251 et seq.).

Construction Activity - Work by Contractor, subcontractor or utility company within the project area, that may result in erosion, sedimentation, or a discharge of pollutants into storm water. Construction Activity includes soil disturbing activities (e.g. clearing, grubbing, grading, excavating); construction materials or equipment storage or maintenance areas (e.g. material piles, borrow area, concrete truck chute wash down, fueling); and activities that may discharge storm water and are directly related to the construction process (e.g. concrete or asphalt batch plants).

Construction General Permit (CGP) - The current permit authorizing storm water discharges from Construction Activities, issued and enforced by ADEC. The CGP authorizes storm water discharges provided permit conditions and water quality standards are met.

Electronic Notice of Intent (eNOI) - The electronic Notice of Intent submitted to ADEC to obtain coverage under the CGP.

Electronic Notice of Termination (eNOT) - The electronic Notice of Termination submitted to ADEC to end coverage under the CGP.

Environmental Protection Agency (EPA) - A federal agency charged to protect human health and the environment.

Final Stabilization – The CGP defines Final Stabilization as:

1. All soil disturbing activities at the site have been completed and either of the two following criteria have been met:
   a. A uniform (e.g.,evenly distributed, without large bare areas) perennial vegetative cover for the area has been established on all unpaved areas and areas not covered by permanent structures, or
   b. Equivalent non-vegetative permanent stabilization measures have been employed (such as use of rip rap, gabions, porous backfill (ADOT&PF specification 703-2.10), railroad ballast or subballast, ditch lining (ADOT&PF Specification 610-2.01 with <3% smaller than #200 sieve), geotextiles, or fill material with low erodibility as determined by an engineer familiar with the site and documented in the SWPPP.
2. When background native vegetation will cover less than one hundred percent (100%) of the ground (e.g., arid areas, beaches), the seventy percent (70%) coverage is adjusted as follows: if the native vegetation covers fifty percent (50%) (0.70 X 0.50 = 0.35), thirty-five percent (35%) total cover is required for final stabilization. On a beach with no natural vegetation, no stabilization is required.
3. In arid and semi arid areas only, all soil disturbing activities at the site have been completed and both of the following criteria have been met:
   a. Temporary erosion control measures (e.g., degradable rolled erosion control product) are selected, designed, and installed along with an appropriate seed base to provide erosion control for at least three years without active maintenance by the permitee:
   b. Temporary erosion control measures are selected, designed, and installed to achieve seventy percent (70%) vegetative coverage within three years.

4. For individual lots in residential construction, final stabilization occurs when either:
   a. The homebuilder has completed final stabilization as specified above, or
   b. The home builder has temporary stabilization including perimeter controls for an individual lot prior to occupation of the home by the homeowner and informing the homeowner of the need for, and benefits of, final stabilization.

Hazardous Material Control Plan (HMCP) - The Contractor's detailed project specific plan for prevention of pollution from storage, use, transfer, containment, cleanup, and disposal of hazardous material (including, but not limited to, petroleum products related to construction activities and equipment). The Contractor shall include the HMCP as an appendix to the SWPPP.

Inspection - An inspection required by the CGP or the SWPPP, usually performed together by the Contractor's SWPPP Manager and the Municipal Inspector.

Municipal Separate Storm Sewer System (MS4) Permit - An ADEC storm water discharge permit issued to local governments (Municipality) and other public bodies, for operation of storm water conveyances and drainage systems. See CGP for further definition

Multi-Sector General Permit (MSGP) - The Alaska Pollutant Discharge Elimination System General Permit for storm water discharges associated with industrial activity.

Operator(s) - The party or co-parties associated with a regulated activity that has responsibility to obtain permit coverage under the CGP. "Operator" for the purpose of the CGP and in the context of storm water associated with construction activity, means any party associated with a construction project that meets either of the following two criteria:

1. The operator has operational control over construction plans and specifications, including the ability to make modifications to those plans and specifications; or
2. The operator has day to day responsibility and operational control for all activities at a project which are necessary to fully comply with the CGP and the project SWPPP for the site or other requirements of the permit. For the purpose of a Contractor executing project Work under this Contract with the Municipality, the Contractor is the operator responsible for CGP and SWPPP coverage and compliance under the CGP for the Work.

Permit - References to permit pursuant to Division 20, Section 20.02 shall mean the Construction General Permit (CGP) defined above.

Pollutant - Any substance or item meeting the definition of pollutant contained in 40 CFR § 122.2. A partial listing from this definition includes: dredged spoil, solid waste, sewage, garbage, sewage sludge, chemical wastes, biological materials, wrecked or discarded equipment, rock, sand, cellar dirt, and industrial or municipal waste.

Project Zone - The Project Zone includes the area of street, road, highway or other facility under construction; project staging and equipment areas; and material and disposal sites, when those areas, routes and sites are directly related to the Contract.

Records - Any record, report, information, document, or photograph required to be created or maintained pursuant to the requirements of the CGP, the CGP storm water requirements of the Clean Water Act and applicable local, state, and federal laws and regulations pertaining to document preservation.

Spill Prevention, Control and Countermeasure Plan (SPCC Plan) - Contractor's detailed plan for petroleum spill prevention and control measures that conform to the requirements of 40 CFR 112.

Spill Response Field Representative - Contractor's representative with authority and responsibility for managing, implementing, and executing the HMCP and SPCC Plan.

Storm Event - A rainfall event that produces more than one half inch (0.5") of precipitation in twenty-four (24) hours and that is separated from the previous storm event by at least three (3) days of dry weather. Event can be measured on site using a rain gauge or Contractor can utilize the nearest National Weather Service (NWS) precipitation gauge station to determine the amount of rain fall during a storm event if the NWS gauge used is located within twenty (20) miles of the site.

Storm Water Pollution Prevention Plan (SWPPP) - Contractor's detailed project- specific plan to minimize erosion and contain sediment within the Project Zone and to prevent discharge of pollutants that exceed applicable water quality standards. The SWPPP includes, but is not limited to the plan, amendments, records of activities, inspection schedules and reports, qualifications of key personnel, and all other documentation, required by the CGP and this specification, and other applicable local, state, and federal laws and regulations.

Storm Water Pollution Prevention Plan Type

Type 1- if area of disturbance is 500 to <10,000 square feet or 4 feet or more in depth and is not part of a common plan of development that disturbs 10,000 square feet or more.

Type 2- if the area of ground disturbance is 10,000 square feet or greater but less than 1 acre and not part of a common plan of development that disturbs one acre or more.

Type 3 - if the area of disturbance is 1 acre or greater, or part of a common development that disturbs one or more acres.

Subcontractor Spill Response Coordinator - The Subcontractor's Representative with authority and responsibility for coordinating the Subcontractor's activities in compliance with the HMCP and SPCC Plan.

Subcontractor SWPPP Coordinator - The Subcontractor's Representative has responsible charge of and authority to direct the Subcontractor's Work; is responsible for the subcontractor's compliance with the SWPPP; and performs coordination with the Superintendent and SWPPP Manager.

Superintendent - Contractor's duly authorized representative in responsible charge of the Work. The Superintendent has responsibility and authority for the overall operation of the Project and for Contractor-furnished sites and facilities directly related to the Project.

SWPPP Amendment - A revision or document that adds to, deletes from, or modifies the SWPPP.

SWPPP Manager - Contractor's qualified representative who conducts inspections, has authority to suspend work and implement corrective actions required for CPG compliance, except they do not have authority to prepare the initial SWPPP or sign inspection reports.

SWPPP Preparer - Contractor's qualified representative who is responsible for developing the initial SWPPP.

Utility Spill Response Coordinator - a utility's representative with authority and responsibility for coordinating the Utility's activities in compliance with the HMCP and SPCC Plan.

Utility SWPPP Coordinator - a utility's representative with authority to direct the Utility's work, and who is responsible for coordination with the Superintendent and SWPPP Manager, and for the utility's compliance with the SWPPP.

Article 2.3 Applicable Standards

The latest version of the following permits, standard and requirements are hereby made a part of these specifications:

A. Alaska 2011 Construction General Permit (CGP) #100000

B. Alaska Department Of Environmental Conservation (ADEC) Storm Water Pollution Prevention Plan (SWPPP) Template

C. Municipal Separate Storm Sewer System (MS4) Permit

Article 2.4 Plan and Permit Submittals

Partial and incomplete submittals will not be accepted for review. A submittal that is re-submitted or revised after submission, but before the review is completed, will restart the submittal review timeline. No additional Contract time or additional compensation will be allowed due to delays caused by partial or incomplete submittals, or required re-submittals.

A. Storm Water Pollution Prevention Plan (SWPPP)

Contractor shall submit an electronic copy and three hard copies of the SWPPP to the Engineer for approval. Contractor shall organize and bind the SWPPP and related documents for submittal according to the requirements of Article 2.9

The Municipality will review the SWPPP submittals within ten (10) business days after they are received. Submittals will be returned to the Engineer, and marked as either "rejected" with reasons listed or as "approved" by the Municipality. When the submittal is rejected, the Contractor shall revise and resubmit the

SWPPP. The ten (10) business days review period will restart when the Contractor resubmits an electronic copy and three hard copies of the revised SWPPP to the Engineer for approval.

After the SWPPP is approved by the Municipality, the Contractor shall sign and certify the approved SWPPP.

B. Hazardous Material Control Plan (HMCP)

Contractor shall submit an electronic copy and three hard copies of the HMCP, as an appendix to the SWPPP, to the Engineer for approval. The HMCP submittal and review timeline, and signature requirements are the same as the SWPPP. The HMCP shall be appended to and submitted with the SWPPP.

C. Spill Prevention, Control and Countermeasure Plan (SPCC)

When a SPCC Plan is required under Article 2.11, Contractor shall submit an electronic copy and three signed hard copies of the SPCC Plan to the Engineer. at least 21 days before beginning Construction Activity. The Municipality reserves the right to review the SPCC Plan and require modifications.

D. Construction General Permit (CGP) Coverage

The Contractor is responsible for permitting of Contractor and subcontractor Construction Activities related to the Project, including any material sites, waste disposal sites, borrow & fill sites, and equipment and material storage areas that are not covered by a different permit.

Prior to beginning Construction Activity, Contractor shall submit an eNOI with the required fee to ADEC for coverage under the Construction General Permit (CGP). Submit a copy of the signed eNOI and ADEC's acknowledgement letter to the Engineer as soon as practicable and no later than three days after filing eNOI or receiving a written responses from ADEC.

The Contractor shall not begin Construction Activity until in full compliance with the conditions listed in Article 2.14.A.

The Municipality will submit an eNOI to ADEC for Construction Activities on Municipal Projects if required. The Engineer will provide the Contractor with a copy of the Municipality's eNOI and ADEC's written acknowledgment by letter, or other document for inclusion in the SWPPP.

E. Ending CGP Coverage

Contractor shall submit an eNOT to ADEC, and submit both a copy of the signed eNOT and ADEC's acknowledgement letter to the Municipality, within 30 days after the Engineer has determined the Contractor has fully complied with the conditions listed in Article 2.16.F.

F. Local MS4 SWPPP Review

When installing Permanent Storm Water Management Controls in accordance with CGP Part 4.9, the Contractor shall submit information required by the Municipality for the project and shall obtain approval prior to commencement of construction activities.

1. transmit a copy of information as required to local MS4 (Municipality); with the required fee using delivery receipt confirmation;
2. transmit a copy of the delivery receipt confirmation to the Engineer within seven (7) days of receiving the confirmation;
3. transmit a copy of any comments by the local MS4 (Municipality) to the Engineer within seven (7) days of receipt;
4. amend the SWPPP as necessary to address local MS4 (Municipality) comments and transmit SWPPP Amendments to the Engineer within seven (7) days of receipt of the comments; and
5. include a copy of the Municipality approval letter in the SWPPP.

G. Modifying Contractor's eNOI

When required by The CGP Part 2.7, Contractor shall modify the eNOI to update or correct information. Reasons for modification include a change in start or end dates, small changes in number of acres to be disturbed, change in decision to use or not use treatment chemicals, or change in location of SWPPP Records.

The Contractor shall submit an eNOT and then submit a new eNOI instead of an eNOI modification when: the operator has changed, the original eNOI indicates disturbed area less than five acres and the project will disturb more than five acres, or a project over five disturbed acres grows by more than 50%.

Article 2.5 Personnel Qualifications.

A. General

Contractor shall provide documentation in the SWPPP that the individuals serving in these positions are "qualified Personnel" pursuant to the CGP.

The Municipality accepts persons having either of the following certificates as equivalent to AK-CESCL, if the certificates are current according to the sponsoring organization's policies:

- CPESC - Certified Professional in Erosion and Sediment Control, or
- CISEC - Certified Inspector in Sediment and Erosion Control

B. SWPPP Preparer

The SWPPP Preparer shall meet at least one of the following qualifications:

- current certification as a Certified Professional in Erosion and Sediment Control (CPESC); or

- current certification as AK-CESCL, and at least three years experience in erosion and sediment control (provide documentation including project names, project timelines, and work responsibilities demonstrating the experience requirement); or
- Professional Engineer licensed in the State of Alaska

For Projects disturbing more than 20 acres, the SWPPP Preparer shall also have completed a SWPPP Preparation course.

C. Superintendent

The Superintendent shall hold current certification as AK-CESCL and be a duly authorized representative as defined in the CGP, Appendix A, Part 1.12.3 and Section 20.02 definitions.

D. SWPPP Manager

The SWPPP Manager shall have current certification as AK-CESCL, and shall meet the CGP experience, training, and authority requirements identified for the Storm Water Lead and Storm Water Inspector positions as defined in the CGP, Appendix C, Qualified Person.

E. Storm Water Inspector & Monitoring Person

The Storm Water Inspector and the Storm Water Monitoring Person shall have current certification as AK-CESCL.

F. Active Treatment System Operator

The Active Treatment System (ATS) operator shall have current certification as AK-CESCL and shall be knowledgeable in the principals and practices of treatment systems in general, including the operation of the project-specific ATS. Active Treatment System operator shall have at least six (6) months field experience with ATS, or completion of an ATS manufacturer's training course, or completion of system operator's certification course.

Article 2.6 Signature/Certfication Requirements and Delegations

A. eNOI and eNOT

The eNOI and eNOT shall be signed and certified by a responsible Contractor corporate officer according to CGP Appendix A, Part 1.12.2. Signature and certification authority for the eNOI and eNOT shall not be delegated.

B. Delegation of Signature Authority for Other SWPPP Documents and Reports

The Contractor shall use Form F-108 to delegate signature authority and certification authority to the Superintendent position, according to CGP Appendix A, Part 1.12.3, for the SWPPP, Inspection Reports and other reports required by the CGP. The Superintendent position is responsible for signing and certifying the SWPPP, Inspection Reports, and other reports required by the CGP, except the eNOI and eNOT.

Engineer will provide the Municipality's Form F-107, which delegates authority from the Municipality to act as the Municipality's duly authorized representative for the purpose of overseeing compliance with the APDES Construction Permit at the project site. The Contractor shall include Form F-107 in the SWPPP.

C. Subcontractor Certification

Subcontractors shall certify that they have read and will abide by the CGP and the conditions of the project SWPPP.

D. Signatures and Initials

Contractor and subcontractor personnel shall handwrite (wet ink) signatures or initials on CGP documents and SWPPP forms, wherever a signature or initial is required.

Article 2.7 Responsibility for Storm Water Permit Coverage

A. Contractor is responsible for permitting and permit compliance.

B. The Contractor has sole responsibility for compliance with ADEC and other applicable federal, state, and local requirements, and for securing all necessary clearances, rights, and permits.

C. An entity that owns or operates a commercial plant, material source, or disposal site receiving materials, waste, or any product generated as a result of the Project is responsible for permitting and permit compliance. The Contractor has sole responsibility to verify that the entity has appropriate permit coverage and to provide a copy of the permit documents to the Engineer.

D. Contractor shall indemnify, defend and hold the Municipality harmless for any and all fines resulting from non-compliance with the permit conditions.

Article 2.8 Utility Responsibilities

If a utility is working ahead of the main project, the utility shall follow the procedures in this Section, obtain SWPPP approval, and file an eNOI with ADEC prior to starting any ground disturbing activity.

Article 2.9 Storm Water Pollution Prevention Plan (SWPPP) Requirements

A. General

Contractor shall prepare SWPPP in accordance with the applicable standards of this Section. Contractor shall submit and maintain the SWPPP in three-ring binder with tabbed and labeled dividers for each section and appendix.

B. SWPPP Preparer and Pre-Construction Site Visit

Contractor shall hire or designate a SWPPP Preparer to prepare the SWPPP and associated documents according to the requirements of the CGP. The SWPPP shall identify the SWPPP Preparer and include qualifications (including the expiration date of any certifications), title, and company name in the SWPPP.

The Contractor and SWPPP Preparer shall conduct a pre-construction inspection at the project site before construction activity begins. If the SWPPP Preparer is not a Contractor employee, the SWPPP Preparer shall visit the site accompanied by Contractor's superintendent. Contractor shall provide the Municipality at least seven (7) days written notice of the site visit, so that the Municipality may participate.

During the pre-construction inspection, the SWPPP Preparer shall identify or, if a draft of the SWPPP has already been prepared, verify that the SWPPP fully addresses and describes:

1. opportunities to phase construction activities;
2. appropriate BMPs and their sequencing; and
3. sediment controls that shall be installed prior to beginning construction activities.

Contractor shall document the SWPPP Preparer's pre-construction inspection in the SWPPP on Form F-106, SWPPP Pre-Construction Site Visit, including the names of attendees and the date.

C. SWPPP Development

Contractor shall prepare the SWPPP with sections and appendices, in accordance with the current ADEC SWPPP template and the following additional information:

1. Add additional appendices for:
   a. Appendix L -- Hazardous Material Control Plan (HMCP)
   b. Appendix M -- SWPPP Preparer's Site Visit
   c. Appendix N -- Rainfall Logs
   d. Appendix O – NOT forms and Acknowledgement letters from ADEC (Include both Municipality's and Contractor's)
2. Obtain the following completed forms from the Municipality and include them in the SWPPP:
   a. SWPPP Delegation of Signature Authority – (F-107)
   b. SWPPP Certification for Municipality (F-109)
3. Use the following Municipality forms for recording information in the SWPPP:
   a. SWPPP Amendment Log (F-114)
   b. SWPPP Certification for Contractor (F-111)
   c. SWPPP Construction Site Inspection Report (F-100 parts 1&2)
   d. SWPPP Corrective Action Log (F-112)
   e. SWPPP Daily Record of Rainfall (F-115)

f. SWPPP Delegation of Signature Authority Contractor (F-108)

g. SWPPP Grading and Stabilization Activities Log (F-110)

h. SWPPP Pre-Construction Site Visit (F-106)

i. SWPPP Subcontractor Certification (F-105)

j. SWPPP Training Log (F-125)

The forms are available on the municipal website, www.muni.org, under Project Management and Engineering Publications.

D. SWPPP Considerations and Contents

The SWPPP shall provide erosion and sediment control measures for all Construction Activity.

The SWPPP shall include the activities of the Contractor, all subcontractors, and utility companies performing Work. The SWPPP shall describe the roles and responsibilities of the Contractor, subcontractors, and utility companies with regard to implementation of the SWPPP.

The SWPPP shall identify all operators for the Project including utility companies performing Construction Activity, and identify the areas over which each operator has operational control and where the Municipality and Contractor are co-operators.

The SWPPP shall include any material sites, waste disposal sites, borrow and fill sites, and equipment and material storage sites. If those sites are covered under a different permit or operated by a different entity, the Contractor shall provide the permit information and/or operational information as part of the SWPPP.

Contractor shall prepare the SWPPP according to the requirements of the CGP and this specification, including accounting for the Contractor's construction methods and phasing, and identifying the amount of mean annual precipitation.

Contractor shall include an Antidegredation Analysis in the SWPPP, if storm water from the Project discharges into a receiving water that is considered a high quality water and constitutes an outstanding national resource. The Municipality does not provide the analysis. The Contractor shall perform this analysis according to the CGP Part 2.1.5.

There are special requirements in the CGP Part 3.2, for storm water discharges into an impaired water body, which may include monitoring of storm water discharges. For projects meeting the permit criteria, the Contractor is responsible for compliance with the CGP Part 3.2 inside and outside the Project Zone.

Contractor shall preserve natural topsoil where possible. Contractor shall delineate the site in accordance to CGP Part 4.1. Contractor shall use stakes, flags, or silt fence, etc. to identify areas where land disturbing activities will occur and areas that will be left undisturbed. Contractor shall minimize the amount of soil exposed during Construction Activity in accordance to CGP Part 4.1.2.

Contractor shall conform to the dewatering requirements of CGP Part 4.3.

The SWPPP shall identify specific areas where potential erosion, sedimentation, or pollution may occur. The potential for wind erosion shall be addressed. The potential for erosion at drainage structures shall be addressed.

SWPPP shall include in the "Stabilize Soils" section, a description of how the Contractor will minimize the amount of disturbed and unstabilized ground in the fall season. Contractor shall identify anticipated dates of fall freeze-up and spring thaw. Contractor's SWPPP shall describe how the Contractor will stabilize areas when it is close to or past the seasonal time of snow cover or frozen conditions, and before the first seasonal thaw. Contractor's SWPPP shall include a plan for final stabilization. Plans for Active Treatment Systems shall be submitted to ADEC for review at least fourteen (14) days prior to their application and the Operator of the ATS identified in the SWPPP. Treatment chemicals shall be identified on the NOI.

The SWPPP shall provide designated areas for equipment and wheel washing, equipment fueling and maintenance, chemical storage, staging or material storage, waste or disposal sites, concrete washouts, paint and stucco washouts, and sanitary toilets. These activities shall be done in designated areas that are located, to the extent practicable, away from drain inlets, conveyance channels, and waters of the US. No discharges are allowed from concrete washout, paint and stucco washout; or from release oils, curing compounds, fuels, oils, soaps, and solvents. Equipment and wheel washing water may be treated and discharged.

Contractor shall implement temporary BMPs for a two (2)-year-twenty-four (24) hour storm event. Contractor shall describe BMPs in the SWPPP and in SWPPP Amendments, including source controls, sediment controls, discharge points, and all temporary and permanent stabilization measures. Contractor's SWPPP shall describe the design, placement, installation, and maintenance of each BMP, using words and drawings as appropriate. Contractor shall provide a citation to the BMP Manual or publication used as a source for the BMP, including the title of the BMP Manual or publication, the author (individual or agency), and date of publication. If no published source was used to select or design a BMP, then the SWPPP or SWPPP amendment shall state that "No BMP manual or publication was used for this design."

Contractor shall describe the sequence and timing of activities that disturb soils and of BMP implementation and removal. Contractor shall phase earth disturbing activities to minimize unstabilized areas and to achieve temporary or final stabilization quickly. Whenever practicable, the Contractor shall incorporate final stabilization work into excavation, embankment and grading activities.

Contractor shall identify the inspection frequency in the SWPPP. At a minimum the inspection frequency shall be:

- at least once every seven (7) days during construction; or
- at least once every fourteen (14) days during construction and within twenty-four (24) hours of the end of a storm event of one-half inch (1/2") or

greater rainfall in a twenty-four (24) hour period (one-half inch (1/2") rainfall as recorded at the project site rain gauge)

The SWPPP shall cite and incorporate applicable requirements of the Project permits, environmental commitments, and commitments related to historic preservation. Make additional consultations or obtain permits as necessary for Contractor specific activities which were not included in the Municipality's permitting and consultation.

The SWPPP is a dynamic document. The Contractor shall maintain the SWPPP current by noting installation, modification, and removal of BMPs, and by using amendments, SWPPP amendment logs, Inspection Reports, corrective action logs, records of land disturbance and stabilization, and other records necessary to document storm water pollution prevention activities and to satisfy the requirements of the CGP and this specification.

E. Recording Personnel and Contact Information in the SWPPP.

Contractor shall include records of the AK-CESCL cards or certificates for the Superintendent, SWPPP Manager, acting Superintendent and acting SWPPP Managers in the SWPPP.

Contractor shall provide twenty-four- (24)-hour contact information for the Superintendent and SWPPP Manager. The Superintendent and SWPPP Manager shall have twenty-four- (24)-hour contact information for all Subcontractor SWPPP Coordinators and Utility SWPPP Coordinators.

Article 2.10 Hazardous Material Control Plan (HMCP) Requirements

Contractor shall prepare the HMCP for prevention of pollution from storage, use, containment, cleanup, and disposal of hazardous material, including petroleum products related to construction activities and equipment. Contractor shall append the HMCP to the SWPPP. Contractor shall compile Material Safety Data Sheets (MSDS) in one location and reference that location in the HMCP.

HMCP shall designate a Contractor's Spill Response Field Representative and provide twenty-four- (24)-hour contact information. Contractor shall designate a Subcontractor Spill Response Coordinator for each Subcontractor. The Superintendent and Contractor's Spill Response Field Representative shall have twenty-four- (24)-hour contact information for each Subcontractor Spill Response Coordinator and the Utility Spill Response Coordinator.

HMCP shall list and provide the location and estimated quantities of hazardous materials (including materials or substances listed in 40 CFR 117 and 302, and petroleum products) to be used or stored on the Project. Hazardous materials shall be stored in covered storage areas. Contractor shall provide secondary containment for all hazardous material storage areas.

HMCP shall identify the locations where fueling and maintenance activities will take place and describe the activities, and list controls to prevent the accidental spillage of petroleum products and other hazardous materials. Controls include placing absorbent

pads or other suitable containment under fill ports while fueling and under equipment during maintenance or repairs.

HMCP shall use secondary containment under all stationary equipment (equipment that does not have a seat for driving) that contains petroleum products and use secondary containment under pumps, compressors, and generators.

HMCP shall list the types and approximate quantities of response equipment and cleanup materials available on the Project, including a list and location map of cleanup materials at each different work site and readily available off site (materials sources, material processing sites, disposal sites, staging areas, etc). Spill response materials shall be stored in sufficient quantity at each work location, appropriate to the hazards associated with that site.

HMCP shall describe procedures for containment and cleanup of hazardous materials. Contractor shall describe a plan for the prevention, containment, cleanup, and disposal of soil and water contaminated by spills and a plan for dealing with contaminated soil and water encountered during construction. Contractor shall clean up spills or contaminated surfaces immediately.

HMCP shall describe methods of disposing of waste petroleum products and other hazardous materials generated by the Project, including routine maintenance. Contractor shall identify haul methods and final disposal areas and provide assurance that final disposal areas are permitted for hazardous material disposal.

HMCP shall describe methods of complying with the requirements of AS 46.04.010-900, Oil and Hazardous Substances Pollution Control, and 18 AAC 75, including contact information for reporting hazardous materials and petroleum product spills to the Project Engineer and reporting to federal, state and local agencies.

Article 2.11 Spill Prevention, Control, and Countermeasure Plan (SPCC Plan) Requirements

Contractor shall prepare and implement an SPCC Plan when required by 40 CFR 112 and when both of the following conditions are present on the Project:

- oil or petroleum products from a spill may reach navigable waters (as defined in 40 CFR 112); and
- total above ground storage capacity for oil and petroleum products is greater than 1,320 gallons (not including onboard tanks for fuel or hydraulic fluid used primarily to power the movement of a motor vehicle or ancillary onboard oil-filled operational equipment, and not including containers with a storage capacity of less than 55 gallons)

HMCP and SWPPP shall reference the SPCC plan.

Article 2.12 Superintendent and SWPPP Manager Responsibility and Authority

Contractor's superintendent is responsible for the overall operation of the Project and all Contractor-furnished sites and facilities directly related to the Project. The Superintendent shall sign and certify the SWPPP, Inspection Reports, and other reports

required by the CGP except the NOI and NOT. The Superintendent may not delegate the task or responsibility of signing and certifying the SWPPP submitted under Article 2.4, Inspection Reports, and other reports required by the CGP.

The Superintendent may assign certain duties to the SWPPP Manager, which may include:

- ensuring Contractor's and subcontractor's compliance with the SWPPP and CGP;
- ensuring the control of erosion, sedimentation, or discharge of pollutants;
- directing and overseeing installation, maintenance, and removal of BMPs;
- performing Inspections; and
- updating the SWPPP including adding amendments and forms.

Contractor shall ensure that Superintendent and SWPPP Manager are knowledgeable in the requirements of this Section, the SWPPP, CGP, BMPs, HMCP, SPCC Plan, environmental permits, environmental commitments, and historic preservation commitments.

Contractor's Superintendent and SWPPP Manager shall have the complete authority and shall be responsible for suspending construction activities that do not conform to the SWPPP or CGP.

Article 2.13 Materials

Contractor shall

- use materials suitable to withstand hydraulic, wind, and soil forces, and to control erosion and trap sediments according to the requirements of the CGP and the Specifications.
- use the temporary seed mixture specified by special provision, or use annual rye grass if no temporary seed mix is specified.
- use straw that is certified free of noxious weed by the United States Department of Agriculture(USDA), Natural Resources Conservation Service, Local Soil and Water Conservative District(NRCS). Alaska Weed Free Forage Certification Program shall be used when available. Hay may not be substituted for straw.

BMP's shall conform to the latest version of Municipality of Anchorage Storm Water Manual or as approved by the Engineer

Article 2.14 Construction Requirements

Contractor shall be familiar with the requirements of the CGP. Contractor shall fully comply with the SWPPP and the requirements of the CGP.

A. Prior to Construction

Contractor shall complete the following actions before construction activity begins:

1. the SWPPP Preparer shall visit the Project, the visit shall be documented in the SWPPP, and the SWPPP shall be developed (or amended) with findings from the visit ;
2. the SWPPP shall be approved by the Engineer;
3. the Contractor shall be authorized to begin construction only by the Engineer;
4. the Project eNOIs for the Municipality and for the Contractor, as well as other eNOIs if there are additional operators, shall be listed as Active Status on the ADEC website before construction activity commences ;
5. Contractor shall post notices on project site containing the following information:
    - Copy of all eNOIs related to this project
    - Name and twenty-four- (24)-hour phone number of SWPPP Manager and Superintendent
    - Location of the SWPPP
6. Contractor shall prominently post notices on the outside wall of the Contractor's Project office and near the main entrances of the construction project. Postings shall be protected from the weather. Contractor shall locate postings so the public can read them without obstructing construction activities or the traveling public (for example, at an existing pullout). Do not use retro-reflective signs for the SWPPP posting. Do not locate SWPPP signs in locations where the signs may be confused with traffic control signs or devices. Contractor shall update the notices if the listed information changes.
7. Contractor shall install an outdoor rain gauge in accordance with manufacturer's guidance in a readily accessible location on the Project.
8. Contractor shall delineate the site for both ground disturbing activities and areas that will be left undisturbed and install sediment controls and other BMPs that shall be placed prior to the initiation of Construction Activity.

B. During Construction

1. Contractor shall ensure subcontractors understand and comply with the SWPPP and the CGP, and have signed a SWPPP Subcontractor Certification, Form F-105. Contractor shall include SWPPP Subcontractor Certifications as an appendix to the SWPPP. Contractor shall provide SWPPP information to utility companies and coordinate with Subcontractors and utility companies doing work in the Project Zone so that BMPs, including but not limited to, temporary and permanent stabilization, are installed, maintained, and protected from damage.
2. Contractor shall provide on-going training to employees and Subcontractors, on control measures at the site and applicable storm water pollution prevention procedures. Training shall be documented on the SWPPP Training Log Form F-125, including the dates and attendees to these trainings.

Contractor shall include the SWPPP Training Log as an appendix to the SWPPP.

3. Contractor shall notify the Engineer immediately if the actions of any utility company or Subcontractor do not comply with the SWPPP and the CGP.
4. Contractor shall not install concrete washout containment within one hundred (100) feet of wetlands and/or other water bodies.
5. Contractor shall comply with requirements of the HMCP and SPCC Plan, and all local, state and federal regulations that pertain to the handling, storage, containment, cleanup, and disposal of petroleum products or other hazardous materials.
6. Contractor shall keep the SWPPP current (refer to Article 2.9.C SWPPP Considerations and Contents)

C. Pollutant and Hazardous Materials Reporting Requirements

Contractor shall immediately report incidents of non-compliance with the CGP that may endanger health or the environment to ADEC. Incident report shall conform to the CGP, Appendix A, Part 3.0. Contractor shall immediately notify the Engineer and coordinate reports to ADEC with the Engineer. The report shall include:

- a description of the noncompliance and its causes;
- the exact dates and times of noncompliance;
- if not yet corrected, the anticipated time the project will be brought back into compliance; and
- the corrective action taken or planned to reduce, eliminate and prevent re-occurrence.

Contractor shall report spills of petroleum products or other hazardous materials to the Engineer and other agencies as required by law. Contractor shall use the HMCP and SPCC Plan for contact information to report spills to regulatory agencies.

D. Corrective Action and Maintenance of BMPs

If a corrective action is not implemented within the time requirements of this Section, the Contractor shall document the situation in the SWPPP, notify the Engineer and immediately implement alternative BMPs.

1. Contractor shall implement maintenance of BMP's as required by the CGP, SWPPP, and manufacturer's specifications, whichever is more restrictive.
2. Contractor shall implement corrective action should any of the following occur:
   a. if an incident of non-compliance with the SWPPP or CGP is identified;

b. if an Inspection identifies the SWPPP or any part of the SWPPP is ineffective in preventing erosion, sedimentation or the discharge of pollutants;

c. if the Engineer determines the SWPPP or any part of the SWPPP is ineffective in preventing the erosion, sedimentation, or the discharge of pollutants;

d. if any BMP is damaged, undercut, or unable to effectively perform the intended function;

e. before sediment or debris fills any BMP (including sediment traps, ponds and silt fences) to 50% of its design storage capacity (or manufacturer's specifications or SWPPP requirements, whichever is lower); or

f. whenever there is a change in conditions, design, construction, operation, or maintenance that could result in erosion, sedimentation, or the discharge of pollutants.

3. Contractor shall implement corrective actions so that the following time requirements are satisfied:

a. corrective action is completed as soon as possible;

b. corrective action is completed before the next storm event ;

c. corrective action is completed in time to protect water quality; and

d. corrective action is completed no later than the Complete-by-Date that was entered in an Inspection Report (see Article 2.16 for more information).

E. Stabilization

Contractor shall stabilize disturbed areas using temporary or permanent BMP's. Contractor shall initiate stabilization of disturbed soils, erodible stockpiles, disposal sites, and of erodible aggregate layers so that all of the following conditions are satisfied:

- as soon as practicable;
- as soon as necessary to avoid erosion, sedimentation, or the discharge of pollutants;
- as identified in the SWPPP; and
- disturbed land or land surface shall be stabilized within fourteen (14) days after the temporary or permanent cessation of land-disturbing activities on a portion of the site In accordance with the SWPPP.

Contractor shall coordinate work to minimize the amount of disturbed soil at any one time. Contractor shall not disturb more soil than the Contractor can stabilize with the resources available. Land which is disturbed multiple times during a project will require as necessary multiple stabilization efforts.

Contractor shall temporarily stabilize from wind and water erosion those portions of disturbed soils, portions of stockpiles, and portions of disposal sites that are not in active construction. Temporary stabilization measures may require a combination of measures including, but not limited to, vegetative cover, mulch, stabilizing emulsions, blankets, mats, soil binders, non-erodible cover, dust palliatives, or other approved methods.

Before applying temporary or permanent seeding, Contractor shall prepare the surface to be seeded to reduce erosion potential and to facilitate germination and growth of vegetative cover. Contractor shall apply seed, maintain seeded areas, and reseed areas where growth of temporary vegetative cover is inadequate to stabilize disturbed ground.

Contractor shall apply permanent seed, within the time periods required, at locations where seeding is indicated on the Drawings and after land-disturbing activity is permanently ceased.

When installing a culvert or other drainage structure where a stream bypass is not used, Contractor shall install temporary or permanent stabilization concurrently or immediately after placing the culvert or drainage structure in a manner that complies with the SWPPP, applicable project permits and prevents discharge of pollutants. Contractor shall install temporary and permanent stabilization:

- at the culvert or drainage structure inlet and outlet and
- in the areas upstream and downstream that may be disturbed by the process of installing the culvert, culvert end walls, culvert end sections, or drainage structure.

Before deactivating a stream bypass or stream diversion used for construction of a bridge, culvert, or drainage structure, the Contractor shall install permanent stabilization:

- at the inlet and outlet of the culvert, drainage structure, or bridge;
- in the area upstream and downstream of the culvert, drainage structure, or bridge, that is disturbed during installation or construction; and
- under the bridge.

F. Ending CGP Coverage and BMP Maintenance

The Engineer will determine the date that all the following conditions for ending CGP coverage have been met within the Project Zone based on, but not limited to, the following:

- land disturbing activities have ceased;
- Final Stabilization has been achieved (including at Municipality-furnished material sources, disposal sites, staging areas, equipment areas, etc.)
- temporary BMPs have been removed.

After the Engineer has determined the conditions for ending CGP coverage have been met, the Municipality will:

- provide written notice to the Contractor with the date that the conditions were met;
- submit an eNOT to ADEC; and
- provide a copy of the eNOT and ADEC's acknowledgement letter to the Contractor

Contractor shall end permit coverage within the Project Zone by submitting an eNOT to ADEC within 30 days of meeting the conditions for ending CGP coverage. The Contractor is responsible for BMP maintenance and SWPPP updates until permit coverage is ended.

If the Contractor's coverage includes areas where the Municipality is not an Operator, the Contractor may not be able to file an eNOT at the same time as the Municipality. In this case, the Contractor shall amend the SWPPP to remove the Municipality from CGP coverage and state that the Municipality is no longer an Operator within the Project Zone.

Contractor shall indicate in the SWPPP the areas that have reached Final Stabilization, and the dates land disturbing activities ended and Final Stabilization was achieved. The Contractor shall submit an eNOT to ADEC, and insert copies of the Municipality's and the Contractor's eNOTs with ADEC's acknowledgement letters in the appendix of the SWPPP.

Contractor shall submit a copy of each signed eNOT and ADEC's acknowledgement letter to the Municipality within 30 days of receiving them.

G. Transmit final SWPPP

Contractor shall transmit one (1) copy of the final SWPPP, including all amendments and appendices, to the Engineer when the project eNOTs are filed, or within thirty (30) days of the Municipality's eNOT being filed, whichever is sooner. Transmittal shall be by both electronic and hard copy.

Article 2.15 SWPPP Documents (Location on-site and Record Retention)

Contractor shall maintain the SWPPP and related documents as the Record that demonstrates compliance with the CGP. Copies of SWPPP documents transmitted to the Engineer under the requirements of this specification are informational and do not relieve the Contractor of his responsibility to maintain complete records as required by the CGP and this Section.

Contractor shall maintain the SWPPP, HMCP and SPCC Plan at the on-site project office. If there is not an on-site project office, the Contractor shall maintain the documents at an onsite project location that meets CGP requirements and this specification. Records may be moved to another office for record retention during winter shutdown or after the eNOTs are filed. Contractor shall update on-site postings if records are relocated during winter shutdown. Contractor shall update and maintain all postings current and shall provide the Municipality with copies of all Records.

Contractor shall retain Records and a copy of the SWPPP for at least three years after the date of eNOT. If EPA or ADEC inspects the project, issues a Notice of Violation (NOV), or begins investigation for a potential NOV before the retention period expires, Contractor shall retain the SWPPP and all Records related to the SWPPP and CGP until at least three years after EPA and/or ADEC has determined all issues related to the investigation are settled.

The SWPPP and related documents shall be made available for review and copies provided to other regulatory agencies that request them. The project site documents, including related off-site areas or support activities, shall be made available for inspection, or sampling and monitoring, by the Municipality and other regulatory agencies.

Article 2.16 SWPPP Inspections, Amendments, Reports, and Logs

Contractor shall perform inspections, prepare inspection reports, and prepare SWPPP Amendments in compliance with the SWPPP and the CGP. Contractor shall update the SWPPP Corrective Action Log, SWPPP Amendment Log, SWPPP Grading and Stabilization Activities Log, and SWPPP Daily Record of Rainfall forms. For active projects the Contractor shall update the Records daily.

A. Inspection during Construction

Contractor shall conduct periodic inspections according to the schedule and requirements of the SWPPP and CGP.

Inspections required by the CGP and SWPPP shall be performed jointly by the Contractor's SWPPP Manager and the Municipality's inspector.

B. Inspection Reports

Contractor shall use the Municipality's SWPPP Construction Site Inspection Report Form F-100 to record Inspections. Changes or revisions to Form F-100 are not permitted; except for adding or deleting data fields that list the location of discharge points and site specific BMPs. Contractor shall complete all fields included on the Inspection Report form; do not leave any field blank.

Unless otherwise directed by the Engineer, Contractor shall insert a Complete-by-Date for each listed corrective action. Complete-by-date is a date that either complies with the time requirements listed in Article 2.16.D or six calendar days after the date of the inspection, whichever is sooner. Contractor shall provide a copy of the completed Inspection Report to the Engineer by noon of the day after inspection.

The Superintendent shall review, correct errors, and sign and certify the Inspection Report, within three days of the date of Inspection. The Engineer may coordinate with the Superintendent to review and correct errors or omissions before the Superintendent signs the report. Corrections are limited to adding missing information or correcting entries to match field notes and conditions present at the time the Inspection was performed. Contractor shall deliver the signed and certified Inspection Report to the Engineer on the same day the Superintendent signs it.

The Engineer may make corrections after the Superintendent has signed and certified the Inspection Report. The Engineer will initial and date each correction. If the Engineer makes corrections, the Superintendent shall re-certify the Inspection Report by entering a new signature and date in the white space below the original signature and date lines. Contractor shall deliver a copy of the recertified Inspection Report to the Engineer on the day it is recertified.

If subsequent corrections to the certified Inspection Report are required, Contractor shall document the corrections in an addendum that addresses only the omitted or erroneous portions of the original Inspection Report. The Superintendent shall sign and certify the addendum.

C. Inspection before Seasonal Suspension of Work

Contractor and the Municipality shall conduct an inspection not more than fourteen (14) days before seasonal suspension of work to confirm BMPs are installed and functioning according to the requirements of the SWPPP and CGP.

D. Reduced Inspection Frequencies

Contractor shall conduct inspections according to the inspection schedule in the approved SWPPP. Changes in inspection frequency, including beginning and ending dates shall be approved by the Engineer, and documented as an amendment to the SWPPP.

Inspection frequency during winter work or seasonal suspension of work may be reduced to at least one Inspection every thirty (30) days, if approved by the Engineer, and one of the following requirements is met:

- the entire site is temporarily stabilized;
- runoff is unlikely due to winter conditions (e.g. the site is covered with snow, ice or the ground is frozen, and water flow or seepage is not likely to occur); or
- soil disturbing activities are suspended.

The Engineer may waive winter monthly Inspection requirements until twenty-one (21) days before thawing conditions are expected to result in a discharge, if the following requirements are met:

- frozen conditions are anticipated to continue for more than one month; and
- land disturbance activities have been suspended.

Inspections shall resume according to the normal inspection schedule identified in the SWPPP, at least twenty-one (21) days before anticipated spring thaw.

The Engineer may waive requirements for updating the Grading and Stabilization Activities Log and Daily Record of Rainfall during seasonal suspension of work. If so, Contractor shall resume collecting and recording weather data on the Daily Record of Rainfall form one month before thawing conditions are expected to result in runoff. The Contractor shall resume recording land disturbance and

stabilization activities on the Grading and Stabilization Activities Log when Construction Activity resumes.

E. Stabilization before Spring Thaw

Construction Activities within the Project Zone shall be stabilized in accordance with the CGP by the Contractor with appropriate BMPs prior to spring thaw.

F. Inspection before Project Completion

Contractor shall conduct an inspection to ensure Final Stabilization is complete throughout the Project, and temporary BMPs that are required to be removed are removed. Temporary BMPs that are biodegradable and are specifically designed and installed with the intent of remaining in place until they degrade, may remain in place after project completion.

G. Items and Areas to Inspect

Contractor shall conduct inspections of the areas required by the CGP and SWPPP.

H. SWPPP Amendments and SWPPP Amendment Log

The Superintendent and the SWPPP Manager are the only persons authorized to amend the SWPPP and update the SWPPP Amendment Log, Form F-114. The Superintendent or the SWPPP Manager shall sign and date amendments to the SWPPP and updates to the SWPPP Amendment Log.

SWPPP Amendments shall be approved by the Engineer.

Amendments shall be prepared whenever:

- there is a change in design or construction operation;
- maintenance occurs at the construction site that has or could cause erosion or sedimentation;
- there is a discharge of pollutants that has not been previously addressed in the SWPPP;
- an Inspection identifies that any portion of the SWPPP is ineffective in preventing erosion, sedimentation, or the discharge of pollutants;
- an Inspection identifies a problem that requires additional or modified BMPs;
- a BMP is modified during construction or a BMP not shown in the original SWPPP is added ;
- the Inspection frequency is modified (note beginning and ending dates); or
- a change occurs in personnel who are identified in the SWPPP, according to Article 2.9.D.

Contractor shall record removal of BMPs as amendments to the SWPPP. See Article 2.9.C for documenting removal of BMPs.

Contractor shall amend the SWPPP narrative as soon as practicable after a change or modification, but in no case, later than seven (7) days following identification of the need for an amendment. The SWPPP Amendment shall be signed, dated, and cross-reference the amendment number with the Corrective Action Log or SWPPP page number, as applicable. When a BMP is modified or added, describe the BMP according to Article 2.9.C

The Contractor shall maintain the SWPPP Amendment Log. Prior to performing each scheduled Inspection, the Contractor shall submit to the Engineer a copy of the pages of the Amendment Log that contain new entries since the last submittal, including copies of any documents amending the SWPPP.

The Contractor shall append the SWPPP Amendment Log to the SWPPP.

I. Site Maps

Contractor shall document installation, routine maintenance and removal of BMPs by annotating the SWPPP Site Maps, including the date and the recording person's initials by these notes. Contractor shall identify areas where Construction Activities begin, areas where Construction Activities temporarily or permanently cease, and areas that are temporarily or permanently stabilized.

J. Corrective Action Log

The Superintendent and SWPPP Manager are the only persons authorized to make entries on the SWPPP Corrective Action Log, Form F-112. Contractor shall document the need for corrective action within twenty-four (24) hours of either:

- identification during an inspection; or
- discovery by the Municipality's or Contractor's staff, a subcontractor, or a regulatory agency inspector.

Modification or replacement of a BMP, installation of a new BMP not shown in the original SWPPP, or overdue maintenance (for example after a sediment trap exceeds fifty percent (50%) of capacity) is a corrective action and shall be documented on the Corrective Action Log. Do not record removal of BMPs on the Corrective Action Log.

After each Inspection Report has been signed and certified, Contractor shall update the Corrective Action Log with the date of inspection and all proposed corrective actions noted on the Inspection Report.

After the corrective action has been accomplished, the Contractor shall note the action taken if a SWPPP amendment was needed and date and initial the entry.

Contractor shall maintain the Corrective Action Log current and submit a copy to the Engineer prior to performing each scheduled SWPPP Inspection.

Contractor shall append the Corrective Action Log as an appendix to the SWPPP.

K. Grading and Stabilization Activities Log

The Superintendent and SWPPP Manager are the only persons authorized to date and initial entries on the SWPPP Grading and Stabilization Activities Log, Form F-110. Contractor shall use the SWPPP Grading and Stabilization Activities Log to record land disturbance and stabilization activities.

Contractor shall keep the Grading and Stabilization Activities Log current and submit a copy to the Engineer prior to performing each scheduled SWPPP Inspection.

Contractor shall append the Grading and Stabilization Activities Log as an appendix to the SWPPP.

L. Daily Record of Rainfall

Contractor shall use SWPPP Daily Record of Rainfall, Form F-115 to record weather conditions at the Project and update the form daily, including the initials of the person recording each day's entry. Contractor shall submit a copy to the Engineer prior to performing each scheduled Inspection. Contractor shall append the Daily Record of Rainfall to the SWPPP.

Article 2.17 Failure to Perform Work

The Engineer will suspend Work and withhold monies for incidents of non-compliance with either the CGP or SWPPP. If the suspension is to protect workers, the public, or the environment from imminent harm, the Engineer may orally order the suspension of Work. Following an oral order of suspension, the Engineer will promptly give written notice of suspension. In other circumstances, the Engineer will give the Contractor written notice of suspension before suspension of Work. A notice of suspension will state the defects or reasons for a suspension, the corrective actions required to stop suspension, and the time allowed to complete corrective actions. If the Contractor fails to take the corrective action within the specified time, the Engineer may:

1. suspend the work until corrective action is completed;

2. withhold monies due the Contractor until corrective action is completed;

3. assess damages or equitable adjustments against the Contract amount; and

4. employ others to perform the corrective action and deduct the cost from the Contract amount.

Reasons for the Engineer to take action under this section include, but are not limited to, the Contractor's failure to:

- obtain appropriate permits before Construction Activities occur;
- perform SWPPP Administration;
- perform timely Inspections;
- update the SWPPP;

- transmit updated SWPPP, Inspection Reports, and other updated SWPPP forms to the Engineer;
- maintain effective BMPs to control erosion, sedimentation, and pollution in accordance with the SWPPP, the CGP, and applicable local, state, and federal requirements;
- perform duties according to the requirements of this Section; or
- meet requirements of the CGP, SWPPP, or other permits, laws, and regulations related to erosion, sediment, or pollution control.

No additional Contract time or additional compensation is allowed due to delays caused by the Engineer's suspension of Work under this Article.

Article 2.18 Measurement

The Work in this Section is measured by lump sum and will consist of all labor, materials, and equipment required to prepare and implement a SWPPP, including all required SWPPP amendments, revisions, inspections, and all other measures necessary to complete the Work.

Article 2.19 Basis of Payment

Payment for this Work shall be in accordance with Division 10, Section 10.07 - Measurement and Payment, and shall include full payment for all Work described in this Section.

Payment will be made under the following item:

ITEM	UNIT
Storm Water Pollution Prevention Plan (Type)	Lump Sum

SECTION 20.03 EXPLORATORY TEST PITS

Article 3.1 General

Work under this Section consists of furnishing an excavator, operator, and all related supplies in order to dig and fill exploratory test pits as directed by the Engineer prior to the commencement of construction activities.

Article 3.2 Materials

Contractor shall furnish an excavator capable of excavating to a minimum depth of twelve feet (12').

Article 3.3 Construction

Contractor shall excavate as directed by the Engineer. After inspection of the test pit is complete, Contractor shall backfill test pits with native material and compact them so that the ground is returned to its original condition. If directed by the Engineer, Contractor shall segregate the cast piles to avoid contamination.

Article 3.4 Measurement

Work performed under this Section is measured by the cost per hour for all personnel, equipment, and supplies necessary for completion of said Work. Down time or delays caused by equipment failure is included in the measurement and no additional payment will be made.

Article 3.5 Basis of Payment

Payment for this Work shall be in accordance with Division 10, Section 10.07 - Measurement and Payment, and shall include full payment for all Work described in this Section.

Payment is made under the following item:

ITEM	UNIT
Exploratory Excavation	Hour

SECTION 20.04 CLEARING AND GRUBBING

Article 4.1 General

The Work under this Section consists of removing all vegetation, brush, trees, logs, tree stumps, roots, and root mat to a Contractor-provided disposal site, and the preservation from damage of all items designated to remain. Limits of clearing and grubbing shall be in conformance with right-of-way easements, and stipulations, and as shown on the Drawings, staked by the Contractor, and approved by the Engineer.

Article 4.2 Construction

The Contractor shall do all clearing and grubbing necessary in the construction of roadways, bike trails, and utilities. Prior to clearing and grubbing, the Contractor shall stake the clearing limits. Trees, brush, roots, and root mat removed in the clearing, and grubbing operations shall be hauled to a disposal site provided by the Contractor as delineated in Division 10, Section 10.04, Article 4.9 – Disposal Sites.

Any areas designated to remain shall be protected per Division 75, Section 75.02, Article 2.3 – Construction.

Article 4.3 Measurement

The measurement of clearing and grubbing shall be by the acre or portion thereof as shown on the Drawings and staked by the Contractor and approved by the Engineer, or lump sum.

Article 4.4 Basis of Payment

Payment for this Work shall be in accordance with Division 10, Section 10.07 - Measurement and Payment, and shall include full payment for all Work described in this Section.

Payment shall be made under the following unit:

ITEM	UNIT
Clearing and Grubbing	Acre
Clearing and Grubbing	Lump Sum

SECTION 20.05 CLEARING

Article 5.1 General

The Work under this Section consists of clearing the areas shown on the Drawings, staked by the Contractor, and approved by the Engineer of all logs, trees, brush, and other vegetation, and removal to a Contractor-provided disposal site, and the preservation from damage of all items designated to remain.

Article 5.2 Construction

The Contractor shall perform all clearing necessary within the areas shown on the Drawings and staked by the Contractor. All stumps shall be cut off a maximum of two inches (2") above the ground.

Areas designated to remain shall be protected in accordance with Division 75, Section 75.02, Article 2.3 – Construction.

Tree pruning shall be done by an International Society of Arboriculture (ISA) Certified Arborist in accordance with ANSI A300.

All material removed in the clearing operation shall be hauled to a disposal site provided by the Contractor as delineated in Division 10, Section 10.04, Article 4.9 – Disposal Sites. With prior approval of the Engineer, chipping may be an acceptable alternate to clearing and hauling away of spoils.

A. Clearing for Multi Use Paths

Overhanging limbs shall be pruned to provide a six foot (6') clear corridor on both sides of the centerline with a nine foot (9') clearance above finished trail. Where filter fabric is specified, the stumps shall removed completely or ground to a minimum of 6" below the soil surface and backfilled with the appropriate material.

B. Clearing for Sidewalks/Curb Ramps

Contractor shall prune overhanging limbs and other vegetation to provide full clearance of the sidewalk to a minimum height of ten feet (10') above and a minimum width of two feet (2') from the outside edges of the sidewalk, unless otherwise specified on the Drawings or directed by the Engineer.

Article 5.3 Measurement

The measurement of clearing shall be measured by the acre or portions thereof, as shown on the Drawings and staked by the Contractor, or lump sum. Clearing for bike trails, sidewalks, and curb ramps shall be measured by linear feet along the centerline of the improvement.

Article 5.4 Basis of Payment

Payment for this Work shall be in accordance with Division 10, Section 10.07 - Measurement and Payment, and shall include full payment for all Work described in this Section.

Payment shall be made under the following units:

ITEM	UNIT
Clearing	Acre
Clearing	Lump Sum
Clearing for Bike Trail/Sidewalk/Curb Ramp	Linear Foot

SECTION 20.06 REMOVAL OF TREES

Article 6.1 General

The Work under this Section consists of the performance of all operations pertaining to the removal and disposal of trees nine and one-half inches (9 1/2") or greater in diameter measured at Diameter Breast Height (DBH) taken at four and one half feet (4.5') above the lowest soil line. This item will not be a pay item if Clearing or Clearing and Grubbing is included in the Bid Schedule.

Article 6.2 Construction

Contractor shall dispose of trees, including stumps, of the size described above which interfere with construction under this Contract at a Contractor provided disposal site as delineated in Division 10, Section 10.04, Article 4.9 – Disposal Sites.

Removal and disposal of all trees, including stumps, less than nine and one-half inches (9 1/2") DBH will be considered an incidental part of the excavation unless either the pay items Clearing and/or Clearing and Grubbing are included in the Bid Schedule.

Article 6.3 Measurement

Measurement for tree removal shall be per tree removed in the size range described.

Article 6.4 Basis of Payment

Payment for this Work shall be in accordance with Division 10, Section 10.07 - Measurement and Payment, and shall include full payment for all Work described in this Section.

Payment shall be made under the following units:

ITEM	UNIT
Tree Removal	Each

SECTION 20.07 REMOVAL OF SIDEWALK AND CONCRETE APRON

Article 7.1 General

The Work under this Section consists of performing all operations pertaining to the removal and disposal of sidewalks and concrete aprons designated for removal, including wire mesh or steel reinforcement within the concrete sidewalk and apron, in accordance with the limits shown on the Drawings or as directed by the Engineer.

Article 7.2 Construction

Sidewalks or concrete aprons to be removed shall be saw cut or broken at a joint. Broken joints shall be finished, as required by the Engineer, to eliminate jagged edges. The Contractor shall dispose of this material at a Contractor-provided disposal site as delineated in Division 10, Section 10.04, Article 4.9 – Disposal Sites.

Article 7.3 Measurement

Sidewalk and concrete apron designated for removal will be measured in square yards regardless of thickness.

Article 7.4 Basis of Payment

Payment for this Work shall be in accordance with Division 10, Section 10.07 - Measurement and Payment, and shall include full payment for all Work described in this Section.

Payment shall be made under the following unit:

ITEM	UNIT
Remove Sidewalk	Square Yard
Remove Concrete Apron	Square Yard

SECTION 20.08 REMOVAL OF CURB AND GUTTER

Article 8.1 General

The Work under this Section consists of performing all operations pertaining to the removal and disposal of existing curb and gutter designated for removal, including any wire mesh or steel reinforcement within the curb and gutter, in accordance with the limits shown on the Drawings or as directed by the Engineer.

Article 8.2 Construction

Curb and gutter to be removed shall be saw cut or broken at a joint. Broken joints shall be finished, as required by the Engineer, to eliminate jagged edges. The Contractor shall dispose of removed curb and gutter at a Contractor-provided disposal site as delineated in Division 10, Section 10.04, Article 4.9 – Disposal Sites.

Article 8.3 Measurement

Curb and gutter removal designated for removal will be measured in linear feet removed, measured along the face of the curb.

Article 8.4 Basis of Payment

Payment for this item shall be in accordance with Division 10, Section 10.07 - Measurement and Payment, and shall include full payment for all Work described in this Section.

Payment shall be made under the following unit:

ITEM	UNIT
Remove Curb and Gutter	Linear Foot

SECTION 20.09 REMOVAL OF PAVEMENT

Article 9.1 General

The Work under this Section consists of performance of all operations pertaining to the removal and disposal of existing pavement in accordance with the limits indicated on the Drawings and as directed by the Engineer.

The Contractor will remove existing pavement (parking areas, driveways, etc.) within the right-of-way to a line one foot (1') back of the proposed improvements during the initial clearing/excavation operations. Further removal will be as directed by the Engineer in order to provide a proper transition between new and existing pavement. The intent is to minimize unnecessary removal of pavement.

The Contractor shall remove all pavement designated for removal, including pavement placed within the gutter pan. Removal of the pavement within the gutter pan shall be considered incidental to the bid item "Remove Existing Pavement" and no separate payment shall be made.

Article 9.2 Construction

Pavement shall be removed by the Contractor in a manner that will produce a straight, uniform edge along the section removed. The method of producing the straight edge shall be by cutting the section with an air chisel, wheel, power-driven saw, or other methods approved by the Engineer.

Contractor shall keep pavement that is designated for removal free from objectionable material (concrete, steel, etc.) and shall properly dispose of pavement designated for removal. If the removed pavement material under this Section contains objectionable material, as identified by the Engineer, then Contractor shall dispose of this material in accordance with Division 10, Section 10.04, Article 4.9 - Disposal Sites.

Article 9.3 Measurement

Pavement removed will be measured by the square yard of pavement designated for removal, regardless of thickness, except that no measurement will be made of pavement less than one inch (1") thick.

Article 9.4 Basis of Payment

Payment for this Work shall be in accordance with Division 10, Section 10.07 - Measurement and Payment, and shall include full payment for all Work described in this Section.

Payment shall be made under the following unit:

ITEM	UNIT
Remove Pavement	Square Yard

SECTION 20.10 EXCAVATION FOR TRAFFIC WAYS

Article 10.1 General

The Work under this Section consists of furnishing all plant, labor, equipment, supplies, and material in performance of all operations pertaining to the excavation of unsuitable and/or surplus material for street, alleys, access roads, parking lots, sidewalks, curbs, gutter, and bike trails.

Additional excavation for roadways may be required when authorized in writing by the Engineer. Contractor shall not be entitled to additional compensation for performing excavation not previously authorized by the Engineer.

Article 10.2 Survey Stakes

The Contractor shall place control stakes on each side of, and beyond the limits of, the proposed excavation. Stakes will be set at grade breaks and on even grades at intervals not to exceed fifty feet (50'), with additional stakes on vertical curves. These shall be marked with the station, offset, and show the cut or fill to centerline or grid design grade.

Article 10.3 Miscellaneous

Public property lying within the right-of-way, such as signs and markers, that interferes with construction shall be removed and reset at the time and place as directed by the Engineer. Any damage by the Contractor shall be repaired or the item replaced in kind at the Contractor's expense.

Contractor shall remove culverts designated for salvage. Contractor shall deliver salvaged culverts to the location specified in the Contract Documents or as directed by the Engineer.

A disposal site for non-salvageable materials shall be provided by the Contractor per Division 10, Section 10.04, Article 4.9 – Disposal Sites

All existing valve boxes, cleanouts, manholes, etc. shall be located and exposed by the Contractor and carefully protected during the course of the Work. The Contractor, in conjunction with the Engineer, shall check all utilities prior to the start of the construction and record their condition. All manholes, catch basins, cleanouts, etc. will be checked for damage resulting from the Contractor's operation prior to final acceptance by the Owner. The Contractor is responsible for restoring all existing utilities to pre-existing conditions, and shall coordinate with the affected utility in having any necessary repairs completed.

All existing utilities requiring adjustment to grade shall be adjusted by the Contractor in accordance with the applicable Standard Details. Payment for such adjustment shall be as specified under the applicable Section of these Specifications.

Article 10.4 Unusable and Usable Excavation

Unusable excavation shall consist of all excavation which is excess or not suitable for classified fill or backfill as determined by the Engineer. When grubbing of the surface organic or root mat is not required elsewhere on the Drawings or Specifications, unusable excavation shall include the surface mat.

Usable excavation shall consist of material from excavation that is designated by the Engineer as suitable for fill or backfill.

If usable soil conditions are encountered at elevations different from those indicated on the Drawings, the Engineer may direct, in writing, that the excavation be altered to elevations either above or below those specified.

Any unauthorized excavation beyond the specified lines, grades, and cross sections shall be filled with classified fill or backfill and compacted without additional cost to the Owner. The Contractor shall control the banks of all excavated areas as necessary to prevent movement of soil in areas supporting existing foundations, slabs, poles or other structures.

Where unusable soils are encountered in the subgrade within the specified depth below finish grade as indicated on the Drawings, the Contractor shall excavate to a depth such that usable soils are uncovered or the depth below finished grade as directed by the Engineer. The excavations shall be uniformly shaped so that classified backfill material can be properly placed and compacted. The area shall be feathered to adjoining areas where usable material is found. Excavated area shall not be backfilled until cross sectional elevations and measurements of the area excavated have been taken.

The Contractor shall be responsible for keeping all embankments and excavation well shaped and drained. The subgrade shall be maintained, compacted in cut sections if required, and kept free of leaves, sticks, or other debris.

The Contractor shall perform whatever work necessary to prevent flow and accumulation of surface water or ground water in excavations. Unless otherwise provided in the Special Provisions, all Work associated with pumping or dewatering shall be considered incidental to the Contract and no separate payment shall be made.

Article 10.5 Utilization or Disposal of Excavated Material

Excavated material conforming to the specifications for classified fill and backfill shall be used where practical for fill and backfill as directed by the Engineer. When this material is used, it shall be considered usable excavation. Usable excavation shall be compacted in accordance with Section 20.01, Article 1.5 - Compaction Standards. When not used on the Project site, the material shall be hauled away and treated as unusable excavation. Unusable excavation shall be hauled to a Contractor-furnished disposal site as delineated in Division 10, Section 10.4, Article 4.9 – Disposal Sites. Unless otherwise specified in the Special Provisions, the Contractor will not be required to transport usable excavation from one schedule of a Contract for use in another schedule of the same Contract unless they are continuous or adjacent.

Article 10.6 Excavation

The Contractor shall utilize whatever methods and equipment necessary to excavate to the limits designated by the Drawings and Specifications and authorized by the Engineer, except that no equipment or method may be utilized that because of its action deteriorates the subgrade making additional excavation necessary beyond the limits originally authorized.

Article 10.7 Measurement

The measurement of excavation will not include water or other liquids but will include topsoil, mud, muck, or other similar semi-solid material which cannot be drained or pumped away.

Usable excavation will be measured per cubic yard by cross section or at the option of the Engineer per cubic yard by truck count. Computation of truck volumes will be by actual measurement to arrive at truck loading, adjusted by an appropriate swell factor as approved by the Engineer.

Unusable excavation will be measured per cubic yard by cross section or at the option of the Engineer per cubic yard by truck count. Computation of truck volumes will be by actual measurement to arrive at truck loading, adjusted by an appropriate swell factor as approved by the Engineer.

Cross-section measurement of usable or unusable excavation shall be based on in-place volumes as determined by the average end areas of cross sections.

For all scale measured quantities, the Contractor shall furnish a scale certified by the State of Alaska for weighing excavation at a location agreeable to the Engineer. Weight tickets will be serialized and witnessed at the time of weighing by a Contractor-furnished weighman. The Engineer may at any time verify load weights and weighing process. Tickets shall be presented for each load at time of delivery to the Engineer or his designated representative.

Article 10.8 Basis of Payment

Payment for this Work shall be in accordance with Division 10, Section 10.07 - Measurement and Payment, and shall include full payment for all Work described in this Section.

Payment for usable excavation includes the costs of subsequent placement and compaction of the excavated material and shall not be paid separately as Classified Fill or Backfill. Payment for unusable excavation includes removal from the project site and disposal.

Payment shall be made under the following units:

ITEM	UNIT
Usable Excavation	Cubic Yard
Unusable Excavation	Cubic Yard

SECTION 20.11 GRADING EXISTING SURFACES

Article 11.1 General

The Work under this Section consists of performing all operations necessary to shape the existing ground prior to placement of the fill or surfacing material.

Article 11.2 Construction

To the extent indicated on the Drawings, and as directed by the Engineer, the Contractor shall grade the existing ground. Material removed from the high areas shall be used to fill the depressions. Where the existing ground has a slope greater than one vertical to four horizontal, the surface of such ground shall be plowed, steeped or broken up in such a manner that graded material will blend with the existing surface.

On trails, the graded material shall be compacted to ninety percent (90%) of the maximum density; for roads, the required compaction shall be ninety-five percent (95%) of the maximum density. Graded material which is excessively wet shall be aerated by means of blade graders, harrows, or other suitable equipment until the moisture content is satisfactory.

When the bid item is "Grading Existing Surfaces," no separate payment will be made for "Usable Excavation."

Article 11.3 Measurement

Measurement for grading shall be per lineal foot along the centerline of the constructed trail or roadway.

Article 11.4 Basis of Payment

Payment for this Work shall be in accordance with Division 10, Section 10.07 - Measurement and Payment, and shall include full payment for all Work described in this Section.

Payment shall be made under the following unit:

ITEM	UNIT
Grading Existing Surfaces	Linear Foot

SECTION 20.12 DEWATERING

Article 12.1 General

The Work under this Section consists of performing all work and operations pertaining to the dewatering of Work areas, including diversion of surface and subsurface water flows, to provide a dry and stable environment for excavation, backfill, and trench Work.

Article 12.2 Materials

Contractor is responsible for preparing, obtaining approval of, and implementing the Dewatering Plan. The Contractor shall provide all equipment, materials, and personnel necessary to prepare and implement the Dewatering Plan and provide a dry and stable construction environment.

Article 12.3 Construction

Design, installation, and operation of dewatering systems shall comply with current safety and environmental regulations.

The Contractor shall submit his Dewatering Plan to the Engineer a minimum of seven (7) days prior to beginning dewatering activities. The Dewatering Plan shall contain copies of all Contractor obtained permits and approvals. When dewatering approval is required by ADEC, the Contractor shall submit a copy of the approved dewatering plan to the Engineer. Dewatering activities shall not commence until the Engineer has approved the Plan.

Acceptance of Contractor's Dewatering Plan by the Engineer shall not relieve the Contractor of responsibility for the exercise of reasonable precaution, sound engineering judgment, prudent construction practices, overloading or misuse of existing or new structures, the adequacy and safety of such Works, and potential damage or undermining of existing or completed Work. Acceptance of the Dewatering Plan by the Engineer does not relieve the Contractor of the responsibility for providing additional Dewatering Work if implementation of the accepted Dewatering Plan does not result in a dry and stable construction environment.

Water resulting from Contractor's dewatering effort may not be pumped or otherwise diverted into existing storm drains unless required permits, including, but not limited to, the Alaska Department of Environmental Conservation and Environmental Protection Agency, are obtained by Contractor. Under no circumstances will Contractor be allowed to divert water from the excavation onto roadways. Contractor shall provide disposal site for excess water and shall be responsible for securing all necessary permits and approvals. Contractor shall provide copies of permits and approvals to the Engineer.

The Contractor shall dispose of <u>all</u> water from trench dewatering in accordance with the Municipality of Anchorage Storm Water guidelines and State of Alaska regulations. Contractor shall treat all ground water to prevent debris and sediments from entering creeks, lakes, ponds, wetlands areas and drainage systems.

Article 12.4 Measurement

The method of measurement for Dewatering is lump sum for all Work necessary to provide a dry and stable construction environment, including Work not identified in the accepted Dewatering Plan.

Article 12.5 Basis of Payment

Payment for this Work shall be in accordance with Division 10, Section 10.07 - Measurement and Payment, and shall include full payment for all Work described in this Section.

Payment shall be made under the following unit:

ITEM	UNIT
Dewatering	Lump Sum

SECTION 20.13 TRENCH EXCAVATION AND BACKFILL

Article 13.1 General

The Work under this Section consists of providing all materials and performance of all operations pertaining to items of Work involved in excavation, bedding, backfill, and compaction of trenches. When unsuitable or surplus excavation material is removed from the job site, it will be paid for under Section 20.27 – Disposal of Unusable or Surplus Material. When material is imported, it will be paid for under the appropriate item.

Any shoring, sheeting, or bracing required shall be considered incidental to Work under this Section.

The Contractor is subject to the same utilities check requirements as described under Section 20.10, Article 10.3 - Miscellaneous.

Article 13.2 Trench Excavation and Backfill - Description

This Work shall consist of all excavation and backfill of trenches as specified for pipe installation and all other miscellaneous items as specified in this Section.

The Contractor shall minimize the width of the trench.

Trench limits shall be shown on the Drawings, and staked in the field. Trench width at or below the top of the pipe shall be of a width that will allow compaction equipment to be utilized at the sides of the pipe. Trenches shall be of the necessary width for proper laying of pipe, conduit, or cable and the banks shall be sloped so as to conform to the prevailing safety requirements.

Trench depth shall be excavated not less than six inches (6”) below the barrel of the pipe unless otherwise directed by the Engineer. Where maximum trench width is limited, as shown on the Drawings, the Contractor shall provide trench shoring or supports systems as necessary to ensure that the trench width does not exceed the established limits. The Contractor shall erect and maintain continuous trench barricades to prevent access around all excavations left open at the end of the workday. The Contractor shall provide and maintain adequate barricades to insure public safety at all times during the prosecution of the Work. All excavated material shall be stockpiled on geotextile fabric to limit damage to the existing vegetation.

If at any time the Engineer determines that the construction trench section is greater than the pay limits as shown on the Drawings and described herein, the Contractor may be required to implement appropriate construction techniques to reduce the trench section or absorb all costs associated with the greater trench section, including, but not limited to: replacement of pavement, curb and gutter, sidewalk, street amenities, landscaping, disposal of surplus material and furnishing classified backfill. The pay limits as shown on the Drawings and described herein are to limit pay quantities and incidental costs only and are not intended to limit or in any way alter the requirements of Occupational Safety and

Health Administration (OSHA) or State of Alaska safety regulations. The Contractor is required to conduct all trenching operations in accordance with current safety standards.

The Contractor shall be responsible for any and all costs resulting from over excavation, including the need for additional backfill beyond the maximum pay limits as shown on the Drawings or described herein. In addition, the Contractor shall be responsible for all costs and time required for the repair or replacement of streets, alleys, driveways, buildings, sidewalks, curb and gutter, drainage patterns, gravel pads, fences, lawns, property corner markers, survey monumentation, street name signs, traffic control signs, light poles, trees, utilities, shrubbery, gardens, retaining walls, utility markers, rockeries, landscaping, or other public or private improvements damaged by the Contractor which are located outside of the horizontal pay limits defined above. The cost of repairing damage or replacing such facilities within the horizontal pay limits shall be included as part of the unit price for the pay item under construction or shall otherwise be considered incidental to the Contract.

Resurfacing of trench excavation and backfill shall conform to the appropriate sections of this Division, Division 40 – Asphalt Surfacing, and the Standard Details, as appropriate.

Article 13.3 Construction

A. Trench Excavation

The Contractor shall perform all excavation of every description and whatever substance encountered including rock and permafrost. Excavation will be to the extent indicated on the Drawings, and as staked in the field. All excavated materials for backfill shall be placed in an orderly manner and placed at a distance from the trench section which conforms to all state and/or federal safety codes.

All excavated organic or other unsuitable backfill materials shall be placed in a similar manner, but shall be kept separate from all excavated sandy, silty, or gravelly material. In addition, excavated materials suitable for bedding, foundation material, Type II or Type III material, shall be stockpiled separate from each other.

Time is of the essence; therefore, the Contractor shall not begin excavation of the trench until all materials, equipment, and personnel are present to complete the Work in the most expedient manner. Not more than four hundred feet (400') of trench shall be open in advance of pipe or conduit installation unless authorized, in writing, by the Engineer. Unless otherwise indicated in the Drawings and Specifications, all excavation will be open cut.

Where rock or permafrost is encountered, it shall be removed as shown on the Drawings or as directed by the Engineer, and shall be replaced with approved material.

All unusable or surplus material excavated from within the trench section, as shown on the Drawings, shall be removed from the project site. Payment for this Work shall be in accordance under Section 20.27 – Disposal of Unusable or Surplus

Material. Unusable or surplus material excavated outside of the authorized trench section shall be disposed of at the Contractor's expense.

B. Trench Dewatering

Contractor shall protect adjacent utilities and property by trench dewatering and to successfully install the new utility lines. Dewatering shall be performed in accordance with Section 20.12 - Dewatering.

C. Bedding

All pipe shall be placed in bedding material as specified or as shown on the Drawings. Bedding materials for the type specified shall conform to the requirements of Section 20.16 – Furnish Bedding Material.

Bedding material shall be placed so that it does not free fall for a distance greater than two feet (2') above the top of the pipe. If the distance is greater than twp feet (2'), the Engineer may require the Contractor to expose the exterior surface of the pipe being bedded. The Contractor shall provide the Engineer an opportunity to inspect the uncovered Work for damage. Upon completion of the inspection, the Contractor shall repair or replace damaged Work to the satisfaction of the Engineer. All costs associated with inspection, repair, replacement, and installation of the Work due to the bedding material free falling greater than two feet (2') shall be incidental to the Contract.

Where specified bedding material is available from trench excavation, the Contractor shall use care to separate it from unsuitable material. Class B or C bedding material shall be placed under and around the pipe in lifts not to exceed twelve inches (12"), and compacted to ninety-five percent (95%) of maximum density. In no case shall bedding material be placed above the spring line of the pipe in a single lift.

Where specified bedding materials are encountered in the trench bottom, the trench shall be accurately graded to provide uniform bearing and support for each section of the pipe for its entire length, except for the portion of the pipe sections where it is necessary to excavate for the bell holes and other type joints and for the proper sealing of the joints. Bell holes and depressions for joints shall be dug after the trench bottom has been graded and, in order that the pipe will rest on the prepared bottom for as nearly its full length as practical, bell holes and depressions shall be only of such length, depth, and width as required for properly making the particular type of joint. Where unsuitable material such as, but not limited to hard pan or rock is encountered, the trench shall be over-excavated so a minimum of six inch (6") depth of bedding material is required to bring the trench bottom up to the specified grade. This bedding material shall be compacted to a minimum of ninety-five percent (95%) of maximum density prior to the installation of the pipe. If the Engineer determines that excavated material is unsuitable for bedding, he may direct the Contractor to "Furnish Bedding Material."

D. Trench Backfill

Trench backfill is defined as the placement of material above the level of bedding material. Material for backfill shall be obtained from trench excavation if the material is suitable or conforms to the specifications for backfill. If the Engineer determines that excavated material is unsuitable for trench backfill, he may direct the Contractor to "Furnish Trench Backfill." Backfill shall be placed in lifts and compacted in such a manner that ninety-five percent (95%) of maximum density is obtained unless otherwise specified in the Contract Documents. No separate payment will be made for compaction to ninety-five percent (95%) of maximum density. Where mechanical compaction is required, compaction shall be accomplished in accordance with Section 20.01, Article 1.5 - Compaction Standards. Backfill shall not contain broken bituminous pavement or Portland Cement Concrete, and shall be placed in accordance with Section 20.21 - Classified Fill and Backfill.

E. Locator Tape

Contractor shall provide and install a detectable locator tape properly coded and labeled identifying the utility or utilities installed in the trench. The locator tape shall not be less than five (5) mil, foil backed, and six inch (6") wide vinyl tape. The Contractor shall install the locator tape above and parallel to the axis of the utility with no breaks in continuity. The Contractor shall install the locator tape three feet (3') below finish grade or two feet (2') deep in the street structural section. Installation of the locator tape is considered incidental to Trench Excavation and no separate payment shall be made.

F. Cleanup

This item consists of cleanup and finishing of all construction areas to their original condition or better. All Work shall be in accordance with Division 10, Section 10.05, Article 5.25 - Final Trimming of Work.

G. Insulation

Refer to Section 20.26 – Insulation and Standard Detail 20-9 for insulation installation requirements.

Article 13.4 Measurement

Measurement of trench excavation and backfill will be per linear foot of horizontal distance for the various depths as set forth in the Bid Schedule. On sanitary sewer and storm drain construction, measurement will be from center to center of manholes, from center of manhole to center of catch basins, from center of manhole to center of cleanout wye, from center of manhole to end of out-fall piping. On all other construction, measurement will be from station to station as shown on the Drawings. Trench depth shall be measured from original ground to the bottom of bedding along centerline of pipe.

If trench excavation is performed under the same Contract with a roadway project, the depth of trench shall be measured from the bottom of bedding to the subgrade as it exists after the excavation necessary under the roadway project is complete.

When rock or permafrost is encountered for the full depth of trench, it will be measured as stated above. When the rock or permafrost is encountered in the lower part of the trench only, measurement will be by the cubic yard of material excavated. The material overlying the rock or permafrost will also be paid by the cubic yard of material excavated.

Locator tape is incidental to this Bid Item.

Article 13.5 Basis of Payment

Payment for this Work shall be in accordance with Division 10, Section 10.07 - Measurement and Payment, and shall include full payment for all Work described in this Section.

Disposal of unusable or surplus material will be paid under Section 20.27 – Disposal of Unusable or Surplus Material and no payment shall be made in this Section.

Payment shall be made under the following units:

ITEM	UNIT
Trench Excavation and Backfill (various depths)	Linear Foot
Trench Excavation and Backfill (various depths)	Cubic Yard
Rock Excavation and Backfill	Linear Foot
Rock Excavation and Backfill	Cubic Yard
Permafrost Excavation & Backfill	Linear Foot
Permafrost Excavation & Backfill	Cubic Yard
Trench Dewatering	Lump Sum
Insulation (R-Value)	Square Foot

SECTION 20.14 TRENCH EXCAVATION, BACKFILL AND COMPACTION FOR SERVICE CONNECTIONS

Article 14.1 General

The Work under this Section consists of performing all operations necessary for excavation, backfill, and compaction required for service connections and all other miscellaneous items as specified in this Section. Service connections include Sanitary Sewer Service Connections, Footing Drain Services, and Water Service Lines.

Article 14.2 Construction

A. Excavation

Excavation for service connections shall be unclassified and the Contractor shall excavate whatever substances that are encountered to the depth required for the connections. However, if rock or permafrost is encountered in the trench section different from what is shown on the Drawings, measurement and payment will be as delineated in Section 20.13, Articles 13.4 - Measurement and 13.5 - Basis of Payment.

Depth for service connections shall be as required by the utility. Variations in required depth will not be grounds for additional payment. It shall be the Contractor's responsibility to familiarize himself with the depth of the main line utilities and storm drain systems for the project. The Contractor shall excavate for service connections in such a manner that the excavation is ninety (90) degrees to the street line, whenever possible. The ditch shall be long enough to allow the service connection to be stubbed at the property line.

Trenches shall be of sufficient width at the bottom to allow for laying of the particular service (minimum two and one-half feet [2-1/2'] for single service). Excavation of all fill materials to virgin ground is required to provide safety for workmen utilizing the trench.

The Contractor shall be responsible for, and shall bear expenses incurred, in the event that a main line utility should be damaged during excavation or backfilling.

It shall be the responsibility of the Contractor during construction to keep all embankments and excavation well shaped and drained. The subgrade shall be maintained, compacted in cut sections if required, and kept free of leaves, sticks, and other debris.

The Contractor shall perform all Work necessary to prevent flow and accumulation of surface water or ground water in trenches. Unless otherwise provided in the Special Provisions, all Work associated with pumping or dewatering shall be considered a responsibility of the Contractor and shall be accomplished at no additional cost to the Owner.

The Contractor shall submit as a part of his proposal the method to be used in the dewatering of the trench section.

If any portion of asphalt or concrete surfacing is under-cut or damaged during trench excavation, Contractor shall saw cut, remove, and replace the affected area at no additional cost to the Owner.

B. Backfill

At such time as the Engineer may direct, but only after the service lines and appurtenances have been properly completed and inspected, the trenches and appurtenant structures shall be backfilled. The backfill material, free from clods or boulders, shall be placed by the Contractor in conformance with the codes and regulations of the Municipality. Backfill shall be placed and compacted in conformance with Section 20.13 - Trench Excavation and Backfill.

The material shall be placed and spread uniformly in successive layers not exceeding twelve inches (12") in loose thickness. The Engineer may approve lifts of greater thickness provided the equipment and method used will consistently achieve the specified density. The layers shall be carried up full width from the bottom of the fill to avoid the necessity of widening the edges after the center has been brought to grade. Each layer shall be compacted to a minimum of ninety-five percent (95%) of the maximum density at optimum moisture as determined by the method of testing noted in Section 20.01, Article 1.5 - Compaction Standards. Reasonable time shall be provided the Engineer to make field density determinations prior to placement of successive layers of material.

The maximum dimensions of any particle of the embankment material shall not be greater than two-thirds (2/3) of the compacted thickness of the layer in which it is placed. The top six inches (6") of embankment material for streets shall be Type II-A classified fill and backfill. Oversize material shall be removed. Portions of any layer in which the embankment material becomes segregated shall be removed and replaced with satisfactory material or shall be added to and remixed to secure proper gradation as directed by the Engineer. No separate payment will be made for any material removed or regraded in areas where material becomes segregated.

The Engineer may permit lifts in excess of twelve inch (12") thickness when fill or backfill is placed over swampy or saturated ground, or where he is satisfied that the Contractor's method and equipment will consistently produce the specified density. No frozen material shall be used for backfill. Backfill shall not be placed in frozen trench.

C. Notification

The Contractor shall notify the Engineer forty-eight (48) hours before starting excavation (excluding Saturday, Sunday and holidays) on all service connection requests which involve twelve (12) or less connections. On connection requested

for subdivisions involving more than twelve (12) connections, one (1) week notification prior to excavating is required.

Article 14.3 Measurement

Trench excavation, backfill and compaction for service connections shall not be measured for payment.

Article 14.4 Basis of Payment

No separate payment shall be made for trench excavation, backfill and compaction for service connections. This Work is considered incidental to the service connection pay item.

SECTION 20.15 FURNISH TRENCH BACKFILL

Article 15.1 General

The work under this Section consists of performing all operations necessary to furnish trench backfill.

Article 15.2 Construction

The Engineer shall order in writing the amount and type of backfill material to be transported to the Project site. No payment will be made for backfill material under this item that has not been ordered in writing. Material hauled to the Project site shall meet the requirements for the type specified in Section 20.21 - Classified Fill and Backfill.

Article 15.3 Measurement

Trench backfill material furnished to the Project site shall be measured in tons (2000 lbs.) delivered to the Project site. Weights shall be obtained on a scale certified by the State of Alaska. All loads shall be accompanied with a serialized weight ticket witnessed at the time of weighing by a Contractor-furnished weighman. The Engineer may at any time verify load weights and the weighing process. Measurement of delivered material may include moisture up to a maximum of four percent (4.0%) of dry weight of material. When tests by the Engineer indicate that moisture contents in excess of four percent (4.0%) may be occurring consistently, the frequency of testing will be increased as necessary and the results averaged over a period of one week. When the average is greater than four percent (4.0%), the tonnage, as measured over the above period, shall be reduced by the difference. No credit will be due the Contractor when moisture content is less than four percent (4.0%). Testing will be done in accordance with standards provided in this Specification.

Article 15.4 Basis of Payment

Payment for this Work shall be in accordance with Division 10, Section 10.07 - Measurement and Payment, and shall be full payment for all Work described in this Section.

Payment shall be made under the following unit:

ITEM	UNIT
Furnish Trench Backfill (Type)	Ton

SECTION 20.16 FURNISH BEDDING MATERIAL

Article 16.1 General

The Work under this Section consists of performance of all operations pertaining to providing bedding material for underground utilities.

Article 16.2 Materials

The coarse aggregate material conforming to the requirements specified below shall have a percentage of wear not to exceed thirty (30) after five hundred (500) revolutions, as determined by the current requirements of ASTM C-131.

A. Class "B" Bedding

Materials furnished by the Contractor for use as "B" bedding classified fill and/or backfill shall be graded within the limitations delineated below:

Class “B” Bedding

U.S. Std. Sieve	Cumulative % Passing by Weight
1"	100
3/8"	60-100
#4	40-85
#10	25-70
#40	5-40
#200	0-6

In addition to the grading limits listed above, the fraction of material passing the #200 sieve shall not be greater than thirty-five percent (35%) of that fraction passing the #40 sieve. The bedding material shall not include mechanically fractured materials.

B. Class "C" Bedding

Materials furnished by the Contractor for use as "C" bedding classified fill and/or backfill shall be graded within the limitations delineated below:

Class “C” Bedding

U.S. Std. Sieve	Cumulative % Passing by Weight
2"	100
1/2"	40-100
#4	20-75
#10	12-60
#40	2-30
#200	0-6

In addition to the grading limits listed above, the fraction of material passing the #200 sieve shall not be greater than twenty percent (20%) of that fraction passing the #40 sieve. The bedding material shall not include mechanically fractured materials.

C. Class "D" Bedding

Materials furnished by the Contractor for use as "D" bedding classified fill and/or backfill shall be graded within the limitations delineated below:

Class “D” Bedding

U.S. Std. Sieve	Cumulative % Passing by Weight
1"	100
3/4"	90-100
1/2"	50-70
3/8”	20-50
#4	0-10
#200	0-1

The bedding material shall not include mechanically fractured materials.

D. Class "E" Bedding

Materials furnished by the Contractor for use as "E" bedding classified fill and/or backfill shall be graded within the limitations delineated below:

Class "E" Bedding

U.S. Std. Sieve	Cumulative % Passing by Weight
1/2"	100
3/8"	80-100
#4	20-75
#8	12-60
#30	2-30
#200	0-6

Article 16.3 Construction

Placement of bedding shall conform to the requirements of Section 20.13, Article 13.3 - Construction.

The Contractor shall employ such means and methods to keep the bedding material contained and segregated from potential contaminants until it is placed per the Contract Documents. Bedding material lost, contaminated with other material, or otherwise found to be unusable shall not be used for bedding material and the Contractor shall not be paid for that material.

Article 16.4 Measurement

Measurement of bedding shall be per ton or per linear foot of bedding material placed in the trench.

Article 16.5 Basis of Payment

Payment for this Work shall be in accordance with Division 10, Section 10.07 - Measurement and Payment, and shall include full payment for all Work described in this Section.

Payment shall be made under the following units:

ITEM	UNIT
Bedding Material (Class)	Ton
Bedding Material (Class)	Linear Foot

SECTION 20.17 FURNISH FILTER MATERIAL

Article 17.1 General

This Work under this Section consists of performance of all operations pertaining to providing filter material.

Article 17.2 Materials

Filter material shall be gravel or sand consisting of crushed or naturally-occurring granular material. It shall be free of clay particles and conforming to the gradation requirements below.

The coarse aggregate material conforming to the requirements specified below shall have a percentage of wear not to exceed thirty (30) after five hundred (500) revolutions, as determined by the current requirements of ASTM C-131.

Requirements for Grading of Filter Material
Gradation (% Passing)

Sieve	2”	1-1/2”	1”	3/4"	1/2"	3/8”	#4	#16	#50	#100	#200
Type A						100	95-100	45-80	10-30	0-10	0-3
Type B						100		0-5			
Type C	100	95-100		0-20		0-5					
Type D			100	90-100	50-70	20-50	0-5				0-1

Foundry sand and other material which may be cementitous or not suitable for water percolation shall not be used.

Article 17.3 Construction

Filter material is defined as the material which is placed below, above, and on each side of a perforated pipe to form a subdrain. Filter material may also be used directly in the trenches without a perforated pipe to form a French drain. Refer to Standard Detail 55-3 for construction of a subdrain.

Article 17.4 Measurement

Measurement of filer material shall be per ton or per linear foot of material placed in the trench.

Article 17.5 Basis of Payment

Payment for this Work shall be in accordance with Division 10, Section 10.07 - Measurement and Payment, and shall include full payment for all Work described in this Section.

Payment for placing filter material for French drains is included in Section 20.13 - Trench Excavation and Backfill.

Payment for furnishing and placing filter material for subdrains is included in payment for Division 55, Section 55.03 - Subdrains.

Payment for this item includes furnishing the required type of filter material.

Payment shall be made under the following unit:

ITEM	UNIT
Filter Material (Type)	Ton
Filter Material (Type)	Linear Foot

SECTION 20.18 DRAIN/FILTER ROCK

Article 18.1 General

The Work under this Section consists of performing all operations pertaining to furnishing and placing a layer of drain/filter rock as shown on the plans or as directed by the Engineer.

Article 18.2 Materials

Materials furnished by the Contractor for drain/filter rock shall be graded within the limitations delineated below:

Drain/Filter Rock

U.S. Std. Sieve	Cumulative % Passing by Weight	
	Drain Rock	Filter Rock
8”	100	-
6”	50-80	100
4”	25-50	50-80
3”	0-25	-
2”	0-10	
1”	-	0-10
#200	0-1	0-1

Article 18.3 Construction

The drain/filter rock shall be handled, dumped, or spread into place so as to secure a stone mass of the dimensions shown on the Drawings.

Article 18.4 Measurement

Drain/filter rock shall be measured in tons complete and accepted in place.

Article 18.5 Basis of Payment

Payment for this Work shall be in accordance with Division 10, Section 10.07 - Measurement and Payment, and shall include full payment for all Work described in this Section.

Payment shall be made under the following unit:

ITEM	UNIT
Drain Rock	Ton
Filter Rock	Ton

SECTION 20.19 FURNISH FOUNDATION BACKFILL

Article 19.1 General

The Work under this Section consists of performing all operations necessary for excavation, backfilling, compacting foundation materials and trenches.

Article 19.2 Materials

Foundation material for backfill shall consist of Type II, II-A, III, V, or VI classified backfill as specified in the Contract Documents or by the Engineer.

Article 19.3 Construction

If the trench material at the bottom of bedding does not furnish a suitable foundation, the Contractor shall remove the unsuitable material to whatever depth the Engineer determines and replace with foundation material from borrow. Foundation material shall be placed the full width of trench, in lifts not to exceed twelve inches (12") in thickness and compacted to a minimum of ninety-five percent (95%) of maximum density.

In the event of unauthorized over-excavation, the Contractor shall backfill with foundation material to the proper grade and compact to a minimum of ninety-five percent (95%) of maximum density for the full length of the over-excavated trench, all at no additional expense to the Owner.

Article 19.4 Measurement

Where the Contractor is ordered to remove unsuitable material below grade and replace it with foundation material, the material shall be paid for on a cubic yard or ton basis.

Article 19.5 Basis of Payment

Payment for the Work shall be in accordance with Division 10, Section 10.07 - Measurement and Payment, and shall include full payment for all Work described in this Section.

Payment shall be made under the following units:

ITEM	UNIT
Foundation Backfill (Type)	Cubic Yard
Foundation Backfill (Type)	Ton

SECTION 20.20 UNCLASSIFIED FILL AND BACKFILL

Article 20.1 General

The Work under this Section consists of furnishing all plant, labor, equipment, supplies, and material in performance of all operations pertaining to the excavation, stockpiling on site, and placement of Unclassified Fill and Backfill.

Article 20.2 Material

Unclassified Fill and Backfill shall be defined as excavated non-organic material that is determined by the Engineer to be unsuitable for Classified Fill and Backfill and suitable for deposition in non-structural fill zones.

Article 20.3 Construction

Excavated material not conforming to the specifications of Section 20.21 - Classified Fill and Backfill shall be used as Unclassified Fill and Backfill adjacent to the fill-slopes to provide additional slope stability to the fill-slopes. Excess Unclassified Fill and Backfill not used shall be disposed of at a Contractor-furnished disposal site as delineated in Division 10, Section 10.04, Article 4.9 – Disposal Sites.

Article 20.4 Measurement

The measurement of excavation will not include water or other liquids, but will include topsoil, mud, muck, or other similar semi-solid material which cannot be drained or pumped away.

Unclassified Fill and Backfill will be measured per cubic yard by cross section.

Cross section measurement of Unclassified Fill and Backfill shall be based on in-place volumes as determined by the average end areas of cross sections.

Article 20.5 Basis of Payment

Payment for this Work shall be in accordance with Division 10, Section 10.07 - Measurement and Payment, and shall include full payment for all Work described in this Section.

Payment shall be made under the following unit:

ITEM	UNIT
Unclassified Fill and Backfill	Cubic Yard

SECTION 20.21 CLASSIFIED FILL AND BACKFILL

Article 21.1 General

The Work under this Section consists of performing all operations necessary to furnish, place, and compact classified fill and backfill.

Article 21.2 Material

Classified fill and backfill shall contain no lumps, frozen material, organic matter, or other deleterious matter, and shall be durable and sound. It shall have a plasticity index not greater than six (6) as determined by ASTM D-424 and shall conform to one of the following types as required by the Drawings and Specifications. The coarse aggregate material conforming to the requirements specified below shall have a percentage of wear not to exceed thirty (30) after five hundred (500) revolutions, as determined by the current requirements of ASTM C-131.

The portion of the material retained on a #4 sieve shall be known as coarse aggregate. Both coarse and fine aggregates shall conform to the quality requirements of AASHTO M-147.

A. Type II

Materials furnished by the Contractor for use as Type II classified fill and/or backfill shall be graded within the limitations delineated below:

Type II

U.S. Std. Sieve	Cumulative % Passing by Weight
8"	100
3"	70-100
1-1/2"	55-100
3/4"	45-85
#4	20-60
#10	12-50
#40	4-30
#200	2-6

* In addition to the grading limits listed above, the fraction of material passing the #200 sieve shall not be greater than fifteen percent (15%) of that fraction passing the #4 sieve.

B. Type II-A

Materials furnished by the Contractor for use as Type II-A classified fill and/or backfill shall be graded within the limitations delineated below:

Type II-A

U.S. Std. Sieve	Cumulative % Passing by Weight
3"	100
3/4"	50-100
#4	25-60
#10	15-50
#40	4-30
#200	2-6

* In addition to the grading limits listed above, the fraction of material passing the #200 sieve shall not be greater than twenty percent (20%) of that fraction passing the #4 sieve.

C. Type III

Materials furnished by the Contractor for use as Type III classified fill and/or backfill shall be approved sand or gravel with a maximum of ten percent (10%) passing the #200 sieve.

D. Type IV

Materials furnished by the Contractor for use as Type IV classified fill and/or backfill shall be an approved material consisting of sand or gravel with a maximum of twenty-five percent (25%) passing the #200 sieve.

E. Type V

Materials furnished by the Contractor for use as Type V classified fill and/or backfill shall be graded within the limitations delineated below:

Type V

U.S. Std. Sieve	Cumulative % Passing by Weight
3”	100
1 1/2"	60-90
3/4"	40-80
#4	25-55
#10	15-45
#40	4-30
#200	2-6

* In addition to the grading limits listed above, at least thirty percent (30%) of the coarse aggregate particles shall have one or more mechanically fractured face.

F. Type VI

Materials furnished by the Contractor for use as Type VI classified fill and/or backfill shall be graded within the limitations delineated below:

Type VI

U.S. Std. Sieve	Cumulative % Passing by Weight
2”	100
1 1/2"	65-95
3/4"	50-80
1/2"	30-60
#4	20-50
#10	10-30
#40	5-25
#200	2-6

* In addition to the grading limits listed above, at least forty percent (40%) of the coarse aggregate particles shall have one or more mechanically fractured face.

Article 21.3 Construction

The subgrade shall be cleared of all debris and organic material. All depressions or holes below the general area surface level, whether caused by removal of debris or

unacceptable material, or otherwise, shall be backfilled with approved material and compacted to specified density and to a level, uniform surface before the placement of other layers. Embankment shall not be placed on frozen ground, nor on ground having a slope greater than one vertical to four horizontal (slope 1:4).

The specified material shall be constructed at the locations and to the lines and grades indicated on the Drawings. The material shall be placed and spread uniformly in successive layers not exceeding twelve inches (12") in loose thickness. The Engineer may approve lifts of greater thickness provided the equipment and method used will consistently achieve the specified density. The layers shall be carried up full width from the bottom of the fill to avoid the necessity of widening the edges after the center has been brought to grade. Each layer shall be compacted to not less than ninety-five percent (95%) of the maximum density at optimum moisture as determined by the method of testing noted in Section 20.01, Article 1.5 – Compaction Standards. Reasonable time shall be provided the Engineer to make field density determinations prior to placement of successive layers of material.

Blading, rolling, and tamping shall continue until the surface is smooth, free from waves and irregularities, and conforms to elevations shown on the Drawings. If at any time the material is excessively wet, it shall be aerated by means of blade graders, harrows, or other suitable equipment until the moisture content is satisfactory. The surface shall then be compacted and finished as specified above.

Contractor shall submit a processing and blending plan to the Engineer for review and approval prior to utilization of classified fill or backfill from more than one source. The plan must be accompanied by materials analysis reports for each material source and fully describe how the material will be placed and blended to ensure that timely and accurate in-place density testing can be achieved.

The maximum dimensions of any particle of the embankment material shall not be greater than two-thirds (2/3) of the compacted thickness of the layer in which it is placed unless specified elsewhere. The top six inches (6") of embankment material for roads, streets, parking lots, and bike trails, shall be Type II-A classified fill and backfill. Oversize material shall be removed. Portions of any layer in which the embankment material becomes segregated shall be removed and replaced with satisfactory material or shall be added to and remixed to secure proper gradation as directed by the Engineer. No separate payment will be made for any material removed or regraded in areas where material becomes segregated.

The Engineer may permit lifts in excess of twelve inch (12") thickness when classified fill or backfill is placed over swampy or saturated ground, or where he is satisfied that the Contractor's method and equipment will consistently produce the specified density.

Embankments for bike trail sections will be brought to grade in one (1) single lift for embankments less than eighteen inches (18") to finish grade. Trail embankments over eighteen inches (18") shall be brought to grade in lifts as directed by the Engineer.

Article 21.4 Measurement

Classified fill or backfill material, obtained from borrow pits, will be measured in tons (2000 lbs.) of material delivered and placed in accordance with these Specifications. The measurement may include moisture up to a maximum of four percent (4.0%) of dry weight of the material. When tests by the Engineer indicate that moisture contents in excess of four percent (4.0%) may be occurring consistently, the frequency of testing will be increased as necessary and the results averaged over a period of one week. When this average is greater than four percent (4.0%), the tonnage as measured over the above period, shall be reduced by the difference. No credit will be due the Contractor when moisture content is less than four percent (4.0%). Testing shall be done in accordance with Section 20.01, Article 1.3 – Applicable Standards.

Imported classified fill and backfill will be weighed on a scale certified by the State of Alaska. Weight tickets will be serialized and witnessed at the time of weighing by a Contractor-furnished weighman. The Engineer may at any time verify load weights and the weighing process.

Where excavation of unsuitable material beyond the lines and grades shown on the Drawings is ordered in writing, the measurement of classified backfill will include the material required for replacement. No measurement will be made for quantities placed beyond the lines and grade authorized or for quantities placed outside the limits of required excavation.

The Contractor and the Engineer shall verify daily the quantity of material delivered to the Project site. Weight tickets not presented at time of delivery will require special verification by the Contractor before payment can be made.

Article 21.5 Basis of Payment

Payment for this Work shall be in accordance with Division 10, Section 10.07 - Measurement and Payment, and shall include full payment for all Work described in this Section.

Payment for the placement and compaction of usable excavation shall not be paid under this Section.

Payment shall be made under the following units:

ITEM	UNIT
Classified Fill and Backfill (Type)	Ton

SECTION 20.22 LEVELING COURSE

Article 22.1 General

The Work under this Section consists of performing all operations necessary to complete construction of the leveling course on the prepared subbase.

Article 22.2 Material

The leveling course shall consist of crushed gravel, rock, sand, or other approved material. The aggregate shall be free from lumps, balls of clay, or other objectionable matter, and shall be durable and sound. The portion of the material retained on a No. 4 sieve shall be known as coarse aggregate. Both coarse and fine aggregates shall conform to the quality requirements of AASHTO M-147.

Upon written approval by the Engineer, recycled asphalt concrete pavement (RAP) may be substituted for leveling course, on an inch for inch basis. All RAP shall conform to Division 40, Section 40.08 – Recycled Asphalt Pavement. RAP which has been derived from environmentally contaminated aggregates shall not be accepted.

A. Coarse Aggregate

The coarse aggregate material conforming to the requirements specified above shall have a percentage of wear not to exceed thirty-five (35) after five hundred (500) revolutions, as determined by the current requirements of ASTM C-131. It shall consist of angular fragments reasonably uniform in density and quality, and reasonably free from thin and elongated pieces, dirt, and other objectionable material. At least fifty percent (50%) of the coarse aggregate particles shall have two or more mechanically fractured faces.

B. Fine Aggregate

The fine aggregate shall consist of material free of organic or other objectionable matter. The fine aggregate, either naturally combined with the coarse aggregate or separately obtained and mixed therewith, shall be of such character that the composite material will conform to the gradation and other requirements specified.

C. Gradation

The composite mixture of coarse aggregate and fine aggregate, processed as hereinafter specified, shall conform to the following gradation limits as required by the Drawings:

Leveling Course

U.S. Std. Sieve	Cumulative % Passing by Weight
1"	100
3/4"	70-100
3/8"	50-80
#4	35-65
#8	20-50
#50	8-28
#200	*2-6

*In addition to the grading limits stipulated above, fractions passing the #200 sieve shall not be greater than seventy-five percent (75%) of the fractions passing the #50 sieve.

Article 22.3 Construction

The leveling course shall be placed to the lines, grades, and thicknesses shown on the Drawings and shall consist of the materials hereinbefore specified. The leveling course shall provide a smooth stabilized surface on which to place the pavement.

A. Preparation of Subbase

Subbase preparation shall consist of dressing, shaping, wetting, and compacting of the subbase to a minimum density of ninety-five percent (95%) in accordance with Section 20.01, Article 1.5 - Compaction Standards. Surfaces shall be cleaned of all foreign substances and debris. Any ruts or soft yielding spots that may appear in the subbase surface shall be corrected by loosening, removing and adding approved material, reshaping, and recompacting the affected areas to the line, grade, and to the specified density requirements.

B. Surveying

Subbase and leveling course control stakes shall be wooden bluetops set to finish subbase. The subbase bluetops will be the reference used by the Contractor to set top of leveling course. Subbase bluetops shall be set at breaks in grade and on even grade at intervals not to exceed fifty feet (50'), with additional stakes at vertical curves. Side control will be from the lip or gutter, or in the case of strip paving, additional bluetops shall be provided.

C. Placing

The approved leveling course material shall be deposited and spread in a uniform layer to the required contour and grades and to such loose depth that when compacted to the density required will achieve the specified thickness. The material shall be spread uniformly on the prepared subbase from moving vehicles or spreading boxes, then leveled to the required contour and graded with blade graders. Portions of the layer which become segregated in spreading shall be remixed to the required gradation.

D. Compacting

The leveling course shall be compacted to a minimum of ninety-five percent (95%) of maximum density. In all places not accessible to the rolling equipment, the mixture shall be compacted with tamping equipment. Blading, rolling and tamping shall continue until the surface is smooth and free from waves and inequalities. If at any time the mixture is excessively moistened by rain, it shall be aerated by means of blade graders, harrows or other approved equipment until the moisture content is such that the surface can be recompacted and finished as above. The finished leveling course shall be maintained by the Contractor in the above condition until the pavement is applied.

E. Smoothness Test

The surface of the leveling course, when finished, shall not show any deviation in excess of three-eighths inch (3/8") when tested with a ten foot (10') straightedge applied parallel with, and at right angles to, the centerline of the area to be paved. Any deviation in excess of this amount shall be corrected by loosening, adding, or removing material and reshaping and compacting to satisfy the above requirement.

Contractor shall obtain written approval from the Engineer for the final leveling course grade prior to pavement placement.

Article 22.4 Measurement

The leveling course shall be measured in tons of materials delivered and placed in accordance with these Specifications . The measurement may include moisture up to a maximum of four percent (4.0%) of dry weight of the material. When tests by the Engineer indicate that moisture contents in excess of four percent (4.0%) may be occurring consistently, the frequency of testing will be increased as necessary and the results averaged over a period of one week. When this average is greater than four percent (4.0%), the tonnage as measured over the above period, shall be reduced by the difference. No credit will be due the Contractor when moisture content is less than four percent (4.0%). Testing shall be done in accordance with Section 20.01, Article 1.3 – Applicable Standards.

Article 22.5 Basis of Payment

Payment for this Work shall be in accordance with Division 10, Section 10.07 - Measurement and Payment, and shall include full payment for all Work described in this Section.

Payment shall be made under the following unit:

ITEM	UNIT
Leveling Course	Ton

SECTION 20.23 COBBLES

Article 23.1 General

The Work under this Section consists of performing all operations pertaining to furnishing and placing a layer of cobbles as shown on the Drawings or as directed by the Engineer.

Article 23.2 Materials

Materials furnished by the Contractor for cobbles shall be graded within the limitations delineated below:

Cobbles

U.S. Std. Sieve	Cumulative % Passing by Weight
12”	100
8”	50-80
6”	25-50
3”	0-25
2”	0-10
#200	0-1

Article 23.3 Construction

The cobbles shall be handled, dumped, or spread into place so as to secure a stone mass of the dimensions shown on the Drawings.

Article 23.4 Measurement

Cobbles shall be measured in tons complete and accepted in place.

Article 23.5 Basis of Payment

Payment for this Work shall be in accordance with Division 10, Section 10.07 - Measurement and Payment, and shall include full payment for all Work described in this Section.

Payment shall be made under the following unit:

ITEM	UNIT
Cobbles	Ton

SECTION 20.24 RIPRAP

Article 24.1 General

This work shall consist of furnishing and placing a protective covering of stone as shown on the Drawings or as directed by the Engineer.

Article 24.2 Materials

Stone for this work shall be hard angular quarry stones and have a percentage of wear of not more than fifty (50) at five hundred (500) revolutions as determined by ASTM C-535. The least dimension of any piece of stone shall be not less than one-fourth (1/4) its greatest dimension. Stones shall meet the following gradation requirement for the class specified:

A. Class I

No more than ten percent (10%) of the stones by total weight shall weigh more than fifty (50) pounds per piece and no more than fifty percent (50%) by total weight of the stones shall weigh less than twenty-five (25) pounds per piece.

B. Class II

No more than ten percent (10%) of the stones by total weight shall weigh more than four hundred (400) pounds per piece and no more than fifteen percent (15%) by weight of the stones shall weigh less than twenty-five (25) pounds per piece. The stones shall be evenly graded and a minimum of fifty percent (50%) by weight of the stones shall weight two hundred (200) pounds or more per piece.

C. Class III

No more than ten percent (10%) of the stones by total weight shall weigh more than one thousand four hundred (1,400) pounds per piece and no more than fifteen percent (15%) of the stones shall weigh less than twenty-five (25) pounds per piece. The stones shall be evenly graded and a minimum of fifty (50%) by weight of the stones shall weigh seven hundred (700) pounds or more per piece.

Article 24.3 Construction

A footing trench shall be excavated along the toe of the slope when shown on the plans. The stones shall be handled or dumped into place so as to secure a stone mass of the thickness, height and length shown on the plans, or as staked with a minimum of voids.

Undesirable voids shall be filled in with small stones or spalls. The rock shall be manipulated sufficiently by means of a bulldozer, rock tongs, or other suitable equipment to secure a reasonably regular surface and mass stability.

Riprap protection shall be placed to its full course thickness at one operation and in such manner as to avoid displacing the underlying material. Placing of riprap protection in layers or by dumping into chutes or by similar methods likely to cause segregation will not be permitted.

All material going into riprap protection shall be so placed and distributed that there will be no large accumulation or area composed largely of either the larger or smaller sizes of stone.

Unless otherwise authorized by the Engineer, the riprap protection shall be placed in conjunction with the construction of the embankment with only sufficient lag in construction of the riprap protection as may be necessary to prevent mixture of embankment and riprap material.

The Contractor shall provide a level compact area of sufficient size to dump and sort typical loads of riprap at approved location(s). He shall further dump loads specified in this area and assist the Engineer as needed to sort and measure the stones in the load for the purpose of determining if the riprap is within specifications. Mechanical equipment as needed to assist in this sorting shall be provided by the Contractor at no additional cost to the Owner.

Article 24.4 Method of Measurement

Riprap shall be measured in cubic yards measured by neat line measure, or tons, completed and accepted in place. Excavation and backfill required for placement of riprap is considered incidental to the bid item.

Article 24.5 Basis of Payment

Payment for this Work shall be in accordance with Division 10, Section 10.07 - Measurement and Payment, and shall include full payment for all Work described in this Section.

When more than one class of riprap is specified for any pay item, letter suffixes shall be included within the parentheses of the item numbers in order to differentiate between the different classes.

Payment will be made under the following item:

ITEM	UNIT
Riprap (Class)	Cubic Yard
Riprap (Class)	Ton

SECTION 20.25 GEOTEXTILE FABRIC

Article 25.1 Description

The Work under this Section shall consist of furnishing and installing Geotextile Fabric for embankment separation, subgrade reinforcement of roadways, subsurface drainage, or riprap lining in a manner and at locations as shown in the Drawings or as directed by the Engineer.

Article 25.2 Materials

Geotextile fabrics furnished as required in the Drawings shall meet conform to the following specifications, based on AASHTO M288-06. Additional requirements follow depending on the application of the geotextile fabric.

			Geotextile Class [a,b]			
			Class 1		Class 2	
Property	Test Methods	Units	Woven Elongation < 50% [c]	Non-Woven Elongation ≥ 50% [c]	Woven Elongation < 50% [c]	Non-Woven Elongation ≥ 50% [c]
Grab Strength	ASTM D 4632	Lbs (#)	315	200	250	160
Sewn Seam Strength	ASTM D 4632	Lbs (#)	285	182	225	140
Tear Strength	ASTM D 4533	Lbs (#)	115	80	90	56
Puncture Strength	ASTM D 6241	Lbs (#)	620	435	495	310

[a] The severity of installation conditions for the application generally dictates the required geotextile class. Class 1 is specified for more severe or harsh installation conditions where there is greater potential for geotextile damage. Class 2 is specified for less severe conditions.

[b] All numeric values represent MARV in the weaker principal direction.

[c] As measured in accordance with ASTM D 4632.

A. Type A Geotextile (Separation)

Type A Geotextile is used for separation. The Type A Geotextile shall be a woven or nonwoven pervious fabric constructed from long chain polymeric filaments such as polypropylene, polyethylene, polyester, polyvinylidene chloride or polyamide formed into a stable network such that the filaments or yarns retain their relative

position to each other. The geotextile shall be inert to commonly encountered chemicals and shall be free from defects.

Non-woven geotextile may be formed by the needle-punched, spun-bonded or melt-bonded process.

Woven geotextile shall be a pervious sheet of yarn woven into a uniform pattern with distinct and measurable openings. Edges of the cloth shall be salvaged to prevent the outer yarn from pulling away from the cloth.

Acceptance of geotextile material is to be determined according to ASTM D-4873.

Geotextile manufacturer shall provide a letter certifying that its geotextile product meets the specified requirements.

Type A Geotextile supplied shall be Class 2, unless otherwise specified in the Contract Documents and shall meet the physical and mechanical properties listed below:

Property	Test Methods	Units	Requirements
Permittivity	ASTM D 4491	Sec^{-1}	0.02 [a]
Apparent Opening Size	ASTM D 4751	mm	0.60 max avg roll value
Ultraviolet stability (retained strength)	ASTM D 4355	%	50% after 500 h of exposure

[a] Default value. Permittivity of the geotextile should be greater than that of the soil. The Engineer may also require the permeability of the geotextile to be greater than that of the soil.

B. Type B Geotextile (Reinforcement)

Type B Geotextile is used for reinforcement. Type B Geotextile shall consist of a regular grid structure formed by biaxially drawing a continuous sheet of select polypropylene material; it shall have aperture geometry and rib and junction cross sections sufficient to permit significant mechanical interlock with the material being reinforced.

Type B Geotextile shall have high flexural rigidity and high tensile strength at ribs and junctions of the grid structure.

Type B Geotextile shall maintain its reinforcement and interlock capabilities under repeated dynamic loads while in service and shall also be resistant to ultraviolet

degradation, to damage under normal practices, and to all forms of biological or chemical degradation normally encountered in the material being reinforced.

Type B Geotextile supplied shall be Class 1 unless otherwise specified in the Contract Documents and shall meet the physical and mechanical properties listed below:

Property	Test Methods	Units	Requirements
Permittivity	ASTM D 4491	Sec^{-1}	0.05 [a]
Apparent Opening Size	ASTM D 4751	mm	0.43 max avg roll value
Ultraviolet stability (retained strength)	ASTM D 4355	%	50% after 500 h of exposure

[a] Default value. Permittivity of the geotextile should be greater than that of the soil. The Engineer may also require the permeability of the geotextile to be greater than that of the soil.

C. Type C Geotextile (Drainage/Riprap Lining)

Type C Geotextile is used for drainage or riprap lining. The geotextile shall be constructed from long chain polymeric filament or yarns such as polypropylene, polyethylene, polyester, nylon, polyvinylidene chloride or polyamide formed into a stable network such that the filaments or yarns retain their relative position to each other. The geotextile shall be inert to commonly encountered chemicals and shall be free from defects.

Non-woven geotextile may be formed by the needle punched, spun-bonded or melt-bonded process.

Woven geotextile shall be a pervious sheet of yarn woven into a uniform pattern with distinct and measurable openings. Edges of the cloth shall be salvaged to prevent the outer yarn from pulling away from the cloth.

Geotextiles made from yarns of a flat, tape-like character are not allowed.

Type C Geotextile supplied shall be Class 2, unless otherwise specified in the Contract Documents and shall meet the physical and mechanical properties listed below:

Property	Test Methods	Units	Requirements Percent *in Situ* Soil Passing #25 Sieve [a] (0.075mm) < 15	15 to 50	> 50
Permittivity	ASTM D 4491	Sec^{-1}	0.5	0.2	0.1
Apparent Opening Size	ASTM D 4751	mm	0.43	.25	.22
			max. avg roll value		
Ultraviolet stability (retained strength)	ASTM D 4355	%	50% after 500 h of exposure		

[a] Based on grain size analysis of in situ soil in accordance with AASHTO T88.

Acceptance of geotextile material shall be determined according to ASTM D-4759.

D. Submittal Requirements

The Contractor shall submit the following information to the Engineer for review and acceptance:

1. Full-scale laboratory testing and in-ground testing of pavement structures reinforced with the proposed geotextile product which illustrates significant structural contribution of the geotextile product to the pavement structure.
2. Certified test results stating that the geotextile product meets the material and physical properties in all respects.
3. Guidelines to pavement design using proposed geotextile product.
4. A list of not less than ten (10) comparable projects, in terms of size and application, in the United States, with references and phone numbers, where the results of the proposed geotextile product's use can be verified after a minimum of three years continuous service life.
5. Geotextile product samples and certified material property data sheets.
6. Recommended installation instructions.
7. Geotextile manufacturer shall provide a letter certifying that its geotextile product meets the specified requirements.

Article 25.3 Construction

A. Surface Preparation

Prepare surface by removal of stumps, boulders, and sharp objects in accordance with Section 20.05 - Clearing. Contractor shall fill holes and large ruts with material shown on the Drawings or as approved by the Engineer.

Clearing shall be considered incidental to this item. Material used to fill ruts and holes shall be paid for at the unit price for the type of material used, as shown on the Drawings or as approved by the Engineer.

In Areas to Be Surcharged: All trees and brush having a trunk base diameter greater than one-half inch (1/2") shall be cut to within two inches (2") of original ground surface. Grass shall be flattened with no more than two passes of a tracked vehicle.

B. Geotextile Placement

Unroll geotextile directly onto the prepared surface. Exposure of geotextile to the elements after removal of protective covering shall not exceed five days.

Unroll geotextile for embankment reinforcement parallel to the embankment centerline.

Geotextile shall be placed in daily work sections so the lap adjustment can be made should movement of the geotextile occur during placement of fill.

C. Joining

1. Type A Geotextile

Fabric shall be joined with adjacent pieces of fabric by sewing or overlapping.

If fabric is sewn, the fabric shall have all seams sewn by butterfly or J-seams and shall develop a minimum of eighty-five percent (85%) of the specified strength. Seams shall be sewn with a double-thread chain-lock stitch. High strength polyester, polypropylene or Kevlar thread shall be used. The seam shall be one and one-half inch plus or minus one-quarter inch (1-1/2" ±1/4") from the outside edge of the geotextile.

2. Type B Geotextile

Sections shall be overlapped a minimum of three feet (3'), or as shown on the Drawings, to prevent shifting of geotextile during installation and filling.

Lap joints shall be tied with plastic ties specifically manufactured for this purpose at five foot (5') intervals.

3. Type C Geotextile

Fabric shall be joined with adjacent pieces of fabric by sewing or overlapping.

If fabric is sewn, the fabric shall have all seams sewn by butterfly or J-seams and shall develop a minimum of eighty-five percent (85%) of the specified strength. Seams shall be sewn with a double-thread chain-lock stitch. High strength polyester, polypropylene or Kevlar thread shall be used. The seam shall be one and one-half inch plus or minus one-quarter inch (1-1/2" ±1/4") from the outside edge of the geotextile. If the fabric is overlapped, the sections shall be overlapped a minimum of three feet (3') or as shown on the Drawings.

D. Material Placing and Spreading

Fill material placement shall not occur until the Engineer accepts surface preparation and geotextile laps.

Contractor shall maintain minimum laps and fabric continuity without fabric loops or kinks during material placement and spreading.

Follow the manufacturer's recommendations for material placing and spreading of the geotextile. During placing and spreading, the Contractor shall maintain a minimum depth of one foot (1') of cover material at all times between the fabric and the wheels or tracks of the construction equipment. At no time shall equipment operate on the unprotected geotextile. Construction equipment shall not make sudden stops, starts, or turns on the over material. Use a smooth drum roller to achieve the specified density.

Spread the material in the direction of the fabric overlap.

On weak subgrades, spread the cover material simultaneously with dumping to minimize the potential of a localized subgrade failure.

E. Geotextile Repair

Should it be determined during or after embankment construction that specified geotextile lap widths have not been achieved, or that the Contractor otherwise damaged the installed geotextile, the Contractor shall correct the geotextile installation at no additional cost to the Municipality.

The Contractor shall expose the geotextile and add additional geotextile extending in all directions to achieve specified laps and anchorage. After correcting the geotextile, the embankment shall be reconstructed in accordance with the Contract Documents.

Article 25.4 Method of Measurement

Geotextile shall be measured in square yards of ground surface covered by fabric as shown on the Drawings or as approved by the Engineer. Overlapping and stitching of fabric will be considered incidental to this pay item and no additional payment will be made.

Material used to fill ruts and holes shall be paid for at the unit price of the appropriate bid item for the type material used, as shown on the Drawings or as approved by the Engineer.

Article 25.5 Basis of Payment

Payment for this Work shall be in accordance with Division 10, Section 10.07 - Measurement and Payment, and shall include full payment for all Work described in this Section.

Payment shall be made under the following unit:

ITEM	UNIT
Geotextile (Type)	Square Yard

THIS PAGE INTENTIONALLY LEFT BLANK

SECTION 20.26 INSULATION

Article 26.1 General

The Work under this Section consists of performing all operations including labor and material pertaining to the placement of insulation. Contractor shall provide polystyrene insulation board(s), extruded or expanded, in conformance with the Drawings and these Specifications

The Work under this Section also includes shaping and compacting a level area under the horizontal insulation boards and placing the insulation as indicated on the Drawings.

Article 26.2 Materials

The insulation board shall have a minimum full board size of two foot by eight foot (2' x 8'), have the specified R-Value or better, and shall conform to the requirements of AASHTO M230. R-Value of insulation shall be based on manufacturer's warranted R-Value. The insulation board shall be rigid, homogeneous, and conform to the following:

Property	Test Method	Value
Compressive Strength psi, minimum at yield or 5 percent strain	ASTM D-1621	60.0
Water Absorption, maximum percent by volume	ASTM C-272	0.3%
Thermal Resistance, minimum R-Value at 75ºF, ºF-Ft^2-Hr/BTU	ASTM C-177	As Specified

Article 26.3 Construction

Contractor shall install the insulation board with staggered joints. Layering of insulation to obtain the specified R-Value is allowed as long as joints are overlapped at least one foot (1'). Contractor shall blade, shape, and compact the area prior to placing the insulation board in accordance with this Division. Contractor shall shape the subgrade to the lines and grades shown on the Drawings and provide a smooth surface on which to place the insulation board. Prior to placing the insulation board on the prepared subgrade, the Contractor shall furnish straightedges to the Inspector for checking surface uniformity. Surface irregularities shall not exceed one inch (1") within eight feet (8'), or three-eighths inch (3/8") in two feet (2'). Contractor shall uniformly compact the subgrade. Contractor shall hand-rake smooth and recompact the ridges left by the compaction equipment. Contractor shall accurately set the horizontal insulation boards to the line and grade established and in such a manner as to hold the board firmly in place by mechanically connecting it to the subgrade.

Contractor shall replace or repair insulation panels broken, crushed, or cracked, as determined by the Engineer, at no additional cost to the Owner.

Contractor shall cover the insulation board with approved three inch (3”-) minus Classified Fill and Backfill material, placed in a twelve inch (12”) lift, spread, and compacted for the full width of the insulation layer prior to placing subsequent lifts. Contractor shall place, spread, and compact in such a manner as not to damage the insulation board. Engineer will approve spreading and compacting equipment prior to its use.

Article 26.4 Measurement

The insulation board is measured per square foot regardless of thickness, complete and accepted in place.

Additional Work required for preparing the subgrade to the smoothness required is incidental to the bid item(s) in this Section and no separate payment is made.

Article 26.5 Basis of Payment

Payment for this Work shall be in accordance with Division 10, Section 10.07 - Measurement and Payment, and shall include full payment for all Work described in this Section.

Payment will be made under the following unit:

ITEM	UNIT
Insulation Board (R-Value)	Square Foot

SECTION 20.27 DISPOSAL OF UNUSABLE OR SURPLUS MATERIAL

Article 27.1 General

The Work under this Section consists of performing all operations pertaining to the disposal of unusable or surplus material encountered in the trench excavation. This material may include peat, roots, large rocks, unstabilized soil, cesspools, privy pits, or any other material, which in the opinion of the Engineer is objectionable for use as fill or backfill.

Article 27.2 Construction

The Contractor shall use care in separating unusable material from usable material. When unusable material shall be disposed of, the Engineer will order the same in writing, stating the limitations of the Work. Should the trench be, in the opinion of the Engineer, wider than is necessary for the safety of the workmen, a deduction may be made for the excess width. Payment will not be made for disposal of unusable material unless the material is moved in excess of one hundred feet (100') from the excavation.

All unusable material shall be hauled to a disposal site provided by the Contractor as delineated in Division 10, Section 10.04, Article 4.9 – Disposal Sites.

Article 27.3 Cesspools, Privy Pits and Septic Tanks

If cesspools and privies are encountered in right-of-way areas and have to be removed to allow construction, the following procedures for removal are to be used.

In the case of a privy encountered, the Contractor shall remove the privy from the right-of-way area and set it over onto the private property where the privy belongs.

In the case of septic tanks, cesspools and privy pits, the liquid sewage and sludge from the cesspool or privy pit shall be pumped into a watertight container and disposed of at a designated manhole. Care shall be exercised in transporting cesspool and privy pit liquids and sludge so that spillage does not occur during transportation and disposal.

The Contractor shall then remove the remaining sludge, cesspool and privy pit logs or cribbing, and any saturated gravel remaining in the trench area, and shall dispose of this material at the Municipal Landfills. Disposal of this material will be coordinated with the Engineer, in order that the materials disposed of can be covered with fill material by others at the landfill site immediately after it is dumped. Care shall be exercised in transporting this material so that spillage does not occur during transportation and disposal.

Article 27.4 Measurement

The method of measurement for this item will be per cubic yard measured by truck count or by cross section measurement before and after removal of unusable materials. Unless otherwise noted in the Bid Schedule, measurement will be by truck count.

Article 27.5 Basis of Payment

Payment for this Work shall be in accordance with Division 10, Section 10.07 - Measurement and Payment, and shall include full payment for all work described in this Section.

Payment shall be made under the following unit:

ITEM	UNIT
Disposal of Unusable or Surplus Material	Cubic Yard

SECTION 20.28 RECONSTRUCT DRIVEWAY

Article 28.1 Description

The Work under this Section consists of performing all operations and furnishing all materials pertaining to removing, disposing of, re-grading and replacing existing driveway approaches, including removal and disposal of existing pavement, excavation, surfacing, classified fill and backfill, leveling course, and working adjacent to existing landscaping amenities, as indicated on the Drawings.

Driveway reconstruction consists of installing a section of driveway that provides a smooth transition from the existing driveway to the street improvements. The transition length is measured from the back of curb or back of sidewalk and shall be as shown on the Drawings or as directed by the Engineer.

Contractor shall not disturb existing driveways that have imbedded heating systems.

Article 28.2 Materials

All materials used in the reconstruction of driveways shall conform to the requirements for Portland cement concrete Class A-3 conforming with Division 30 –Portland Cement Concrete and asphalt concrete pavement conforming with Division 40 – Asphalt Surfacing for asphalt paved driveways. Subbase material shall conform to the requirements of this Division.

Article 28.3 Construction

All construction practices, tests and other controls shall conform to Division 20 –Earthwork, Division 30 – Portland Cement Concrete, and Division 40 – Asphalt Surfacing.

The Contractor shall neatly and cleanly saw cut and remove existing driveway surfacing. Contractor shall saw cut a minimum of two inches (2”) deep for asphalt surfaces and three inches (3”) deep for concrete surfaces. If any portion of the remaining asphalt or concrete surfacing is under-cut or damaged during construction operations, Contractor shall saw cut, remove, and replace the affected area at no additional cost to the Owner.

The Contractor shall reconstruct existing driveways with asphalt or concrete surfacing to match existing driveway surface. Contractor shall place two inches (2”) of asphalt surfacing over two inches (2”) of leveling course and concrete surfacing at a thickness of six inches (6”). Concrete driveways shall have a minimum six by six inch (6” x 6”) woven wire mesh reinforcement installed. Contractor shall provide all areas of reconstructed driveway with a minimum eighteen inches (18”) of Type II-A Classified Fill and Backfill subbase, and, when required on the Drawings, geotextile fabric.

Contractor shall perform asphalt paving by utilizing a mechanical spreader and compact by a mechanical roller weighing not less than ten (10) tons, except that where the area of the asphalt replacement patch is less than three hundred (300) square feet, a mechanical spreader need not be employed.

Contractor shall tamp small inaccessible areas to produce a compression and surface texture equivalent to that produced by the specified rolling. Hand tampers shall have a maximum tamping face of fifty (50) square inches and minimum weight of twenty-five (25) pounds.

Contractor shall maintain access and parking accommodations for each resident during driveway work. Contractor shall notify and coordinate with the affected resident(s) prior to necessary driveway closures.

Article 28.4 Measurement

Driveway reconstruction is measured either per square yard of replaced driveway surface or per each, complete and in place for the specified type of surface. No separate measurement is to be made for asphalt, classified backfill, excavation, geotextile fabric, of leveling course as these items are incidental to the Work item. No measurement is made for temporary relocation of driveways or required driveway maintenance during construction as these items are incidental to the Work item.

Article 28.5 Basis of Payment

Payment for this item shall be in accordance with Division 10, Section 10.07 - Measurement and Payment, and shall include full payment for all Work described in this Section.

Payment shall be made under the following unit:

ITEM	UNIT
Reconstruct Driveway, Asphalt (Class)	Square Yard
Reconstruct Driveway, Concrete (Class)	Square Yard
Reconstruct Driveway, Asphalt (Class)	Each
Reconstruct Driveway, Concrete (Class)	Each

SECTION 20.29 PIPE CASING

Article 29.1 General

The Work under this Section consists of performing all operations necessary for furnishing and placing a casing by trenchless method under structures, roadways, railroad tracks, or runways.

Article 29.2 Materials

Materials shall be as required by the Contract Documents.

Article 29.3 Construction

Method of installing a pipe casing shall be optional to the Contractor, except that prior to commencing jacking or augering operations, the Contractor shall furnish a work plan to the Engineer and show that his planned method of installation has worked satisfactorily in other areas under similar conditions. The excavation at both ends of the casing shall be considered incidental to this bid item and no separate payment shall be made.

A vertical and horizontal tolerance shall be as shown on the Drawings, provided that the Contractor will be responsible, and use such fittings as are required to adjust alignment and grade to accomplish the connections.

The pipe within the casing (barrier pipe) shall be arrested from movement by sand filling or wood slats and banding according to Standard Detail 20-18.

Article 29.4 Measurement

Measurement shall be from end to end of pipe casing acceptably installed and completed. No measurement will be made for trench excavation and backfill where casing is installed. No compensation will be made for casing installations abandoned or aborted due to deviations in excess of allowable tolerances.

Article 29.5 Basis of Payment

Payment for this Work shall be in accordance with Division 10, Section 10.07 - Measurement and Payment and shall include full payment for all Work described in this Section, including arrestment of pipe.

Payment shall be made under the following unit:

ITEM	UNIT
Furnish and Install Casing	Linear Foot

SECTION 20.30 SHORING, SHEETING AND BRACING/SHORING AND SHEETING LEFT IN THE TRENCH AND PORTABLE

Article 30.1 General

The Work under this Section consists of all operations pertaining to furnishing and installing sheeting, shoring, and bracing to support the trench section to prevent any movement that might damage adjacent facilities or injure workmen or the public, and the use of portable steel shielding.

Article 30.2 Materials

The Contractor shall obtain approval from the Engineer for all sheeting, bracing and shoring materials and/or equipment to be used on the project. Materials used shall be in accordance with Section 1926.651, Subparagraph 1 of the Federal Register, Volume 37, No. 243, OSHA Regulations.

Article 30.3 Construction

All construction requirements for design, installation, and use of sheeting, shoring, bracing, and shielding shall be in accordance with current safety regulations. All sheeting, shoring, bracing, and shielding shall be designed by a Professional Engineer commissioned by the Contractor. All shop drawings and design data shall be submitted to the Engineer for approval.

When shoring and sheeting is left in the trench, sheeting must be lower than the bottom of the pipe and cut off one foot (1') below ground surface. No transverse bracing will be permitted to remain.

Any Contractor provided portable trench shielding shall comply with relevant OSHA regulations. The Contractor shall provide the Engineer certification of such compliance from the portable shield manufacturer or supplier.

Article 30.4 Measurement

No measurement will be made for Work in this Section.

Article 30.5 Basis of Payment

No separate payment shall be made for shoring, sheeting, bracing, or portable shields. Any single technique or combination of techniques used for shoring, sheeting, and bracing shall be considered incidental to the Contract.

MUNICIPALITY OF ANCHORAGE
STANDARD SPECIFICATIONS

DIVISION 20
EARTHWORK
STANDARD DETAILS

STANDARD CONSTRUCTION SPECIFICATIONS
MISCELLANEOUS
DIVISION 20
INDEX OF STANDARD DETAILS

20-1	Typical Sections - 20'/24' Strip Paved and R.A.P. Streets
20-2	Typical Sections - Secondary Streets
20-3	Typical Sections - Primary Streets
20-4	Typical Section - Deep Excavation
20-5	Typical Section - Alley
20-6	Typical Section - Pathway
20-7	Driveway Connection Detail
20-8	Trench Backfill and Bedding Layout
20-9	Pipe Insulation
20-10	Class "B" Bedding Material
20-11	Class "C" Bedding Material
20-12	Class "D" Bedding Material
20-13	Foundation Materials
20-14	Type II Classified Fill and Backfill
20-15	Type II-A Classified Fill and Backfill
20-16	Type V Classified Fill and Backfill
20-17	Type VI Classified Fill and Backfill
20-18	Leveling Course
20-19	Pipe Encasement
20-20	Compaction of Backfill within the Right-of-Way

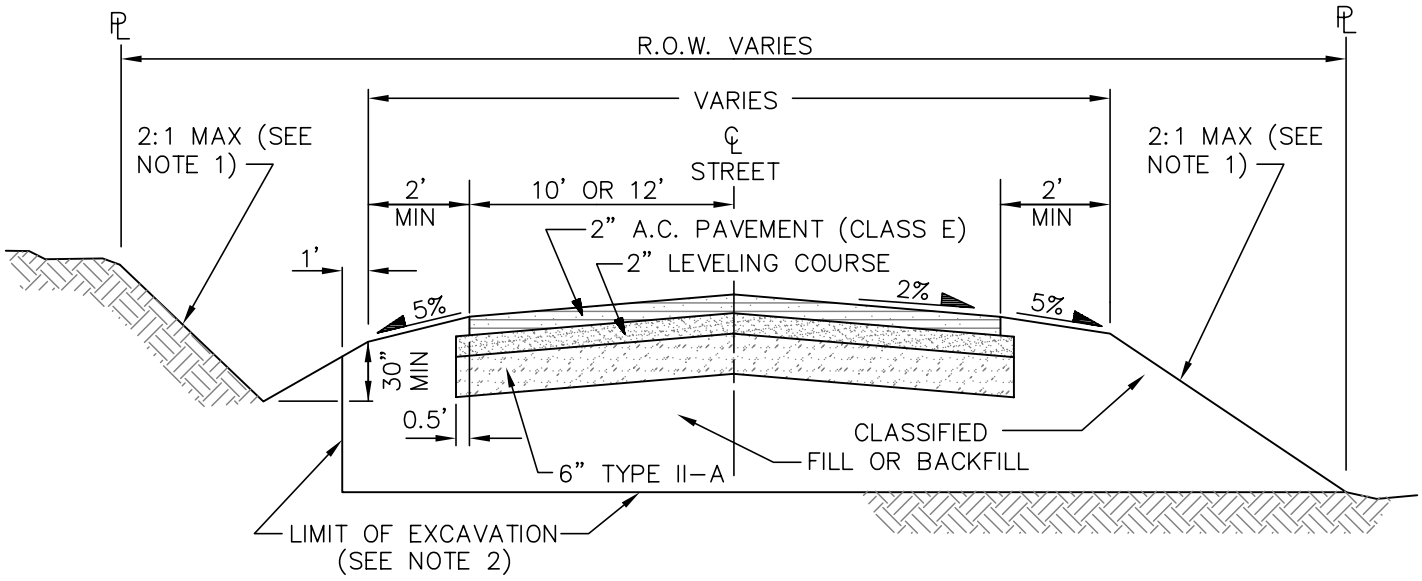

TYPICAL SECTION - 20'/24' STRIP PAVING

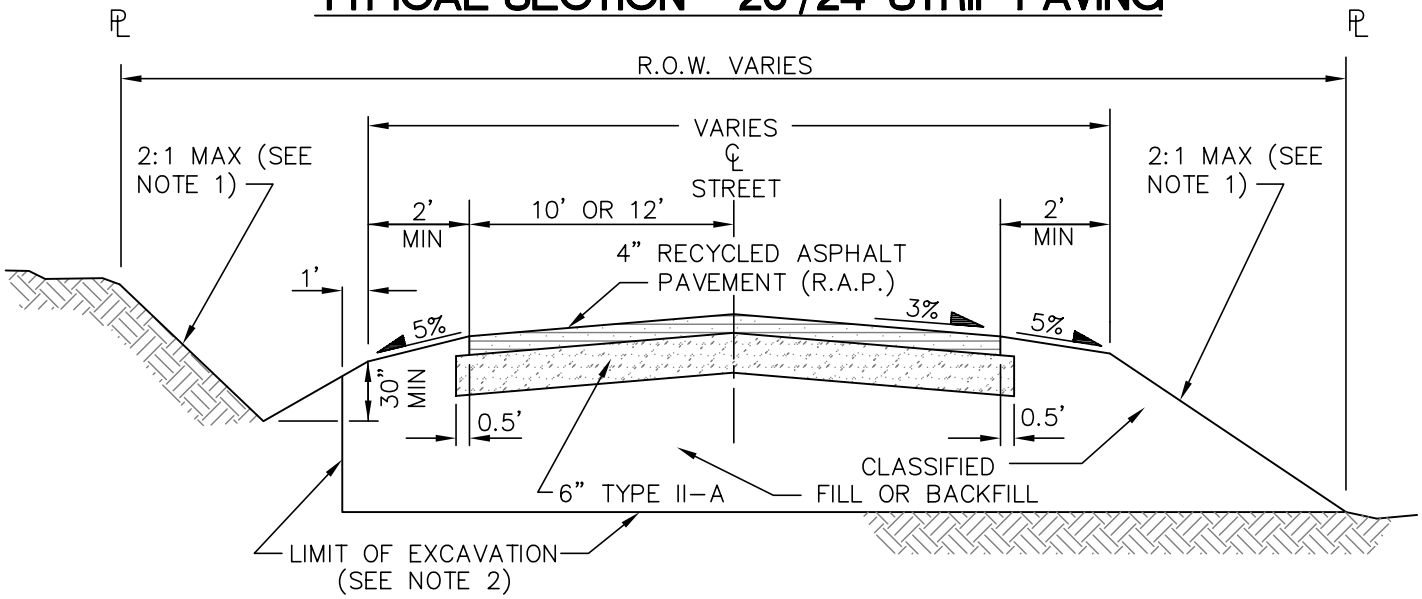

TYPICAL SECTION - 20'/24' RECYCLED ASPHALT STREET

NOTES:

1. PLACE OR REMOVE AND GRADE MATERIAL IN A NEAT MANNER FROM EXCAVATION LIMITS TO EXISTING ELEVATION AT PROPERTY LINE OR AS DIRECTED BY THE ENGINEER. (MAXIMUM 2:1 CUT AND FILL SLOPES)
2. ENGINEER WILL DETERMINE THE DEPTH OF EXCAVATION.
3. UNLESS OTHERWISE APPROVED, THE CENTERLINE OF STREET SHALL BE THE CENTERLINE OF R.O.W.
4. RECYCLED ASPHALT PAVING (R.A.P.) SHALL BE SEAL-COATED AS SPECIFIED IN DIVISION 40, SECTION 40.08 – RECYCLED ASPHALT PAVEMENT.

MUNICIPALITY OF ANCHORAGE	SCALE: NTS APPROVED: REVISED: 10/07	**TYPICAL SECTIONS 20'/24' STRIP PAVED AND R.A.P. STREETS**	SECTION # DIV 20 DETAIL # 20-1

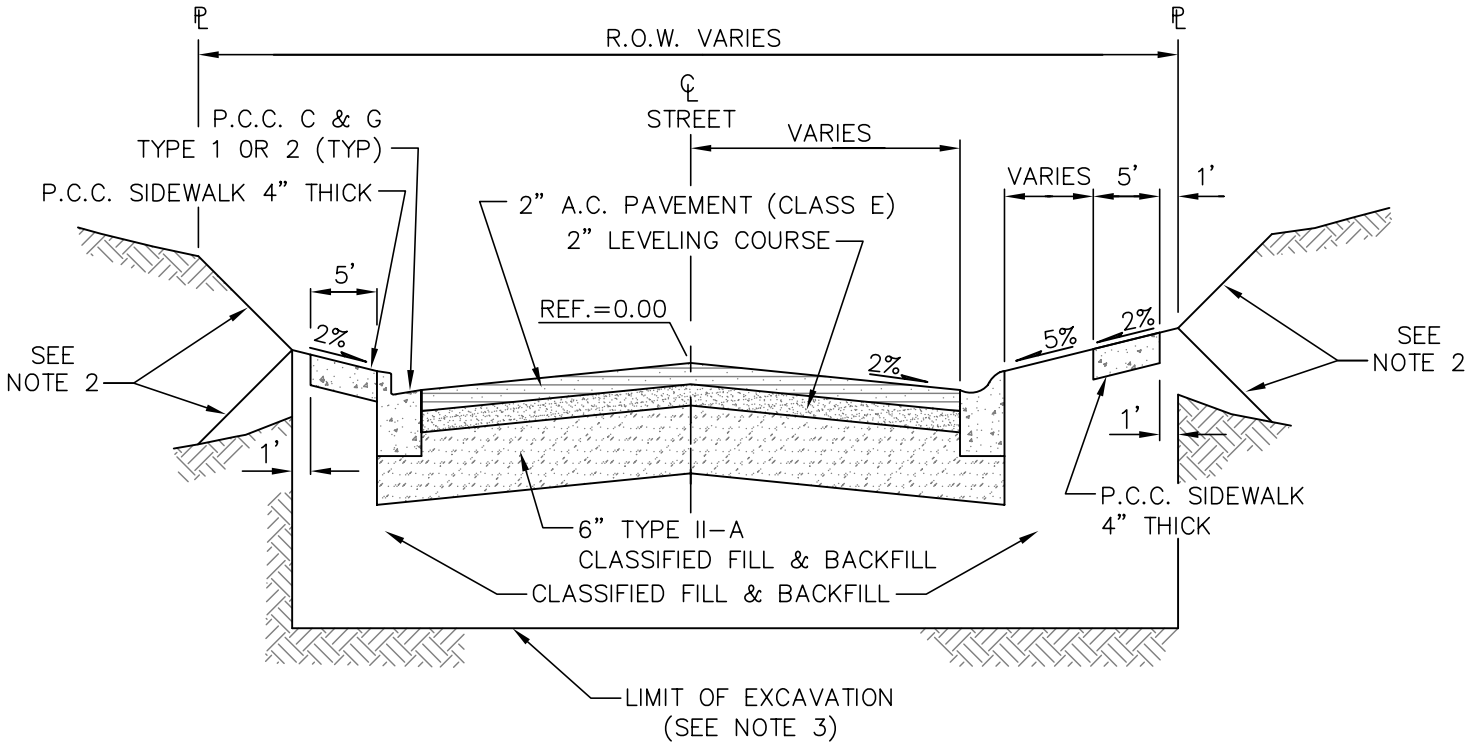

NOTES:

1. DIMENSIONS AND ELEVATIONS SHOWN ON THIS STANDARD DETAIL ARE TYPICAL. PROJECT SPECIFIC DIMENSIONS SHOWN ON THE DRAWINGS SHALL CONTROL.
2. PLACE OR REMOVE AND GRADE MATERIAL IN A NEAT MANNER FROM EXCAVATION LIMITS TO EXISTING ELEVATION AT PROPERTY LINE OR AS DIRECTED BY THE ENGINEER. (MAXIMUM 2:1 CUT AND FILL SLOPES)
3. ENGINEER WILL DETERMINE THE DEPTH OF EXCAVATION.
4. UNLESS OTHERWISE APPROVED, THE CENTERLINE OF STREET SHALL BE THE CENTERLINE OF R.O.W.
5. WHERE SIDEWALKS ARE NOT CONSTRUCTED, SEE STANDARD DETAIL 20-4 FOR SLOPING BETWEEN CURB AND PROPERTY LINE.

MUNICIPALITY OF ANCHORAGE	SCALE: NTS APPROVED: REVISED: 10/07	TYPICAL SECTIONS SECONDARY STREETS	SECTION # DIV 20 DETAIL # 20-2

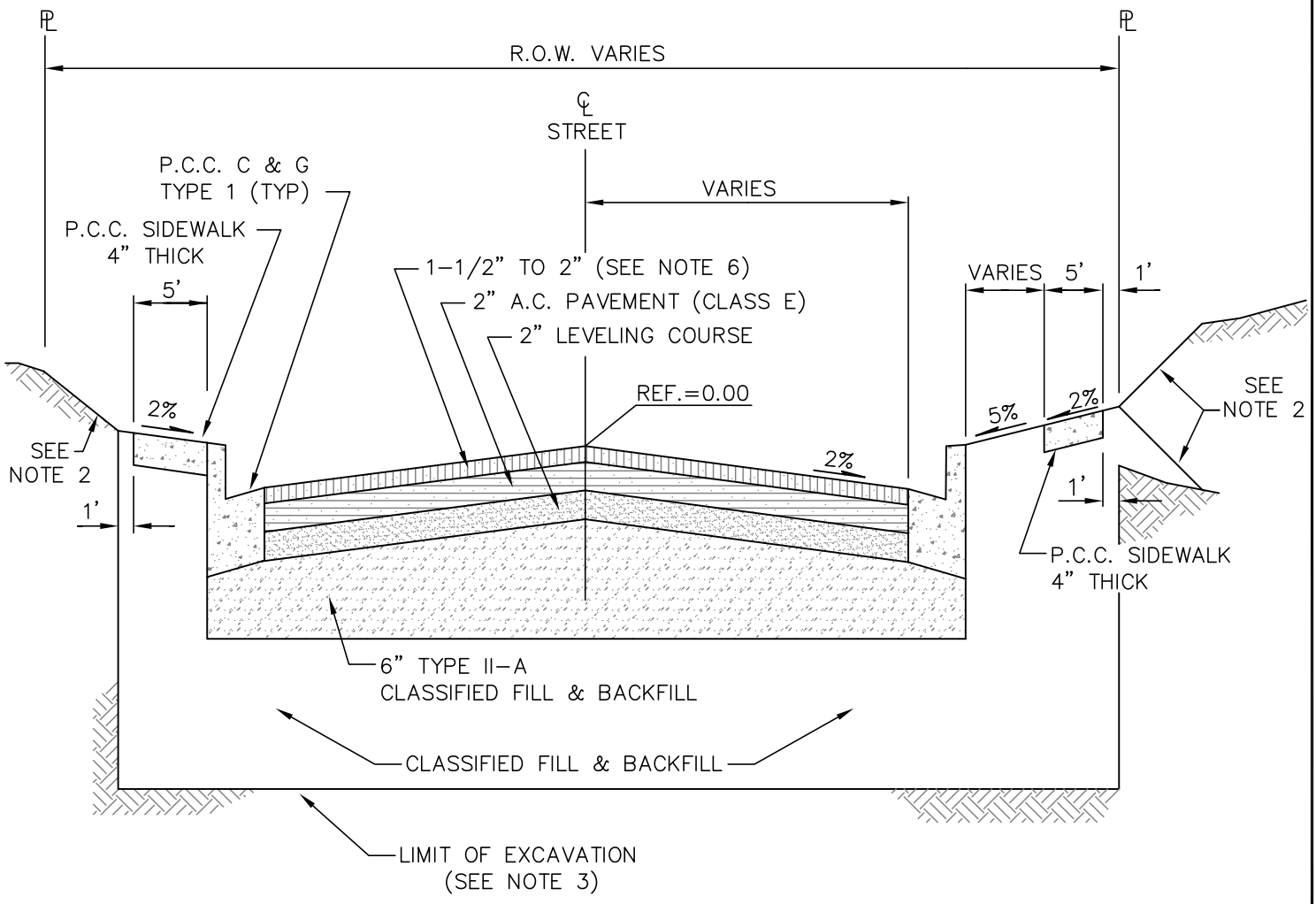

NOTES:

1. DIMENSIONS AND ELEVATIONS SHOWN ON THIS DRAWING ARE TYPICAL. PROJECT SPECIFIC DIMENSIONS SHOWN ON THE DRAWINGS CONTROL.
2. PLACE OR REMOVE AND GRADE MATERIAL IN A NEAT MANNER FROM EXCAVATION LIMITS TO EXISTING ELEVATION AT PROPERTY LINE OR AS DIRECTED BY THE ENGINEER (MAXIMUM-2:1 CUT AND FILL SLOPES).
3. ENGINEER WILL DETERMINE THE DEPTH OF EXCAVATION.
4. UNLESS OTHERWISE APPROVED, THE CENTERLINE OF STREET SHALL BE THE CENTERLINE OF R.O.W.
5. WHERE SIDEWALKS ARE NOT CONSTRUCTED, SEE STANDARD DETAIL 20-4 FOR SLOPING BETWEEN CURB AND PROPERTY LINE.
6. A.C. PAVEMENT DEPTH SHALL BE 1-1/2" FOR CLASS D PAVEMENT AND 2" FOR CLASS A PAVEMENT.

MUNICIPALITY OF ANCHORAGE	SCALE: NTS APPROVED: REVISED: 12/12	TYPICAL SECTIONS PRIMARY STREETS	SECTION # DIV 20 DETAIL # 20-3

REVISION: 12/12 CHANGED C&G REFERENCE TO TYPE 1

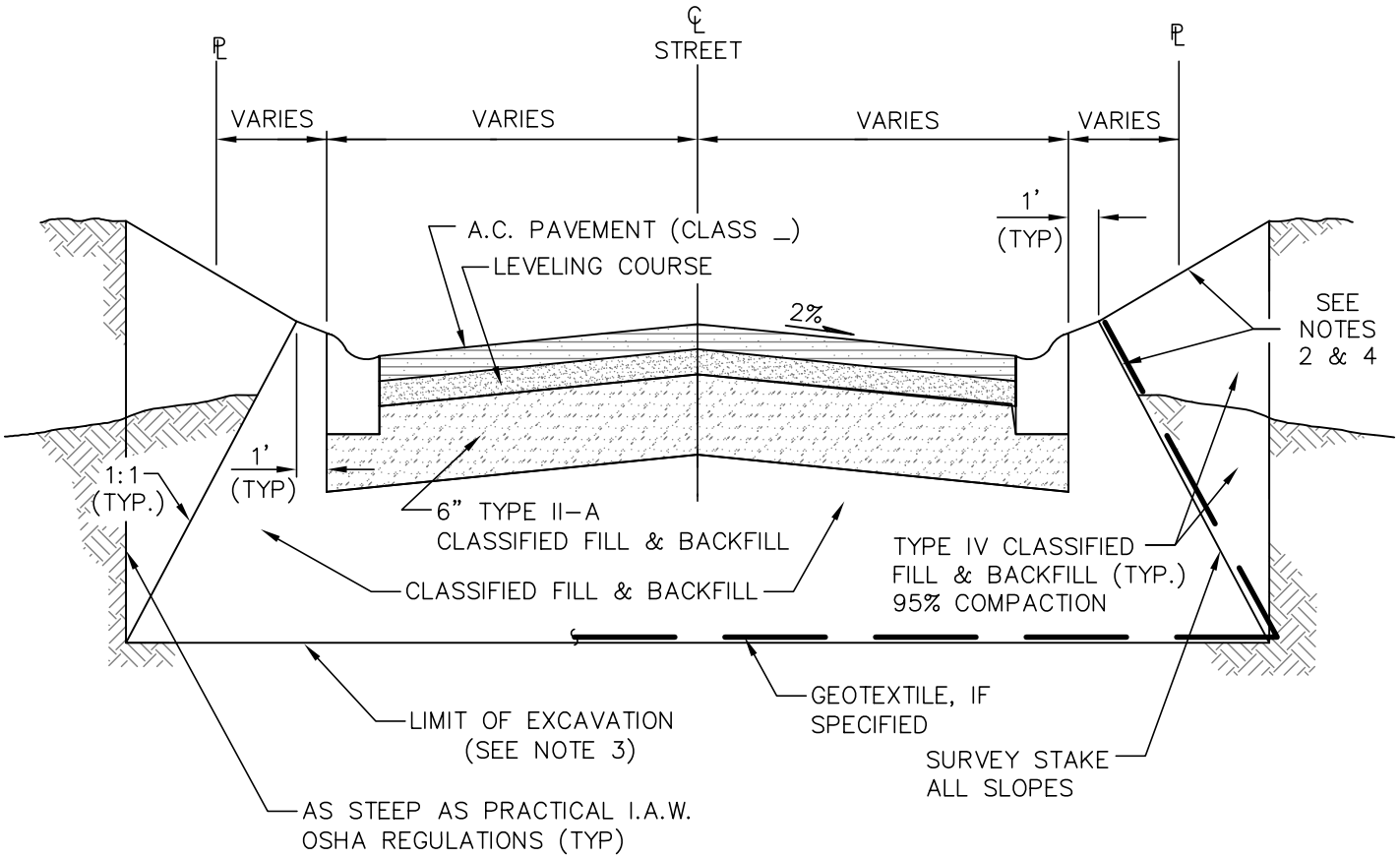

NOTES:

1. DIMENSIONS AND ELEVATIONS SHOWN ON THIS DRAWING ARE TYPICAL. PROJECT SPECIFIC DIMENSIONS SHOWN ON THE DRAWINGS SHALL CONTROL.
2. PLACE OR REMOVE AND GRADE MATERIAL IN A NEAT MANNER FROM EXCAVATION LIMITS TO EXISTING ELEVATION AT PROPERTY LINE OR AS DIRECTED BY THE ENGINEER. (MAXIMUM 2:1 CUT AND FILL SLOPES)
3. ENGINEER WILL DETERMINE THE DEPTH OF EXCAVATION.
4. SEE APPLICABLE STANDARD DETAIL FOR SPECIFIC STREET DIMENSIONS.

MUNICIPALITY OF ANCHORAGE	SCALE: NTS APPROVED: REVISED: 10/07	**TYPICAL SECTION DEEP EXCAVATION**	SECTION # DIV 20 DETAIL # 20–4

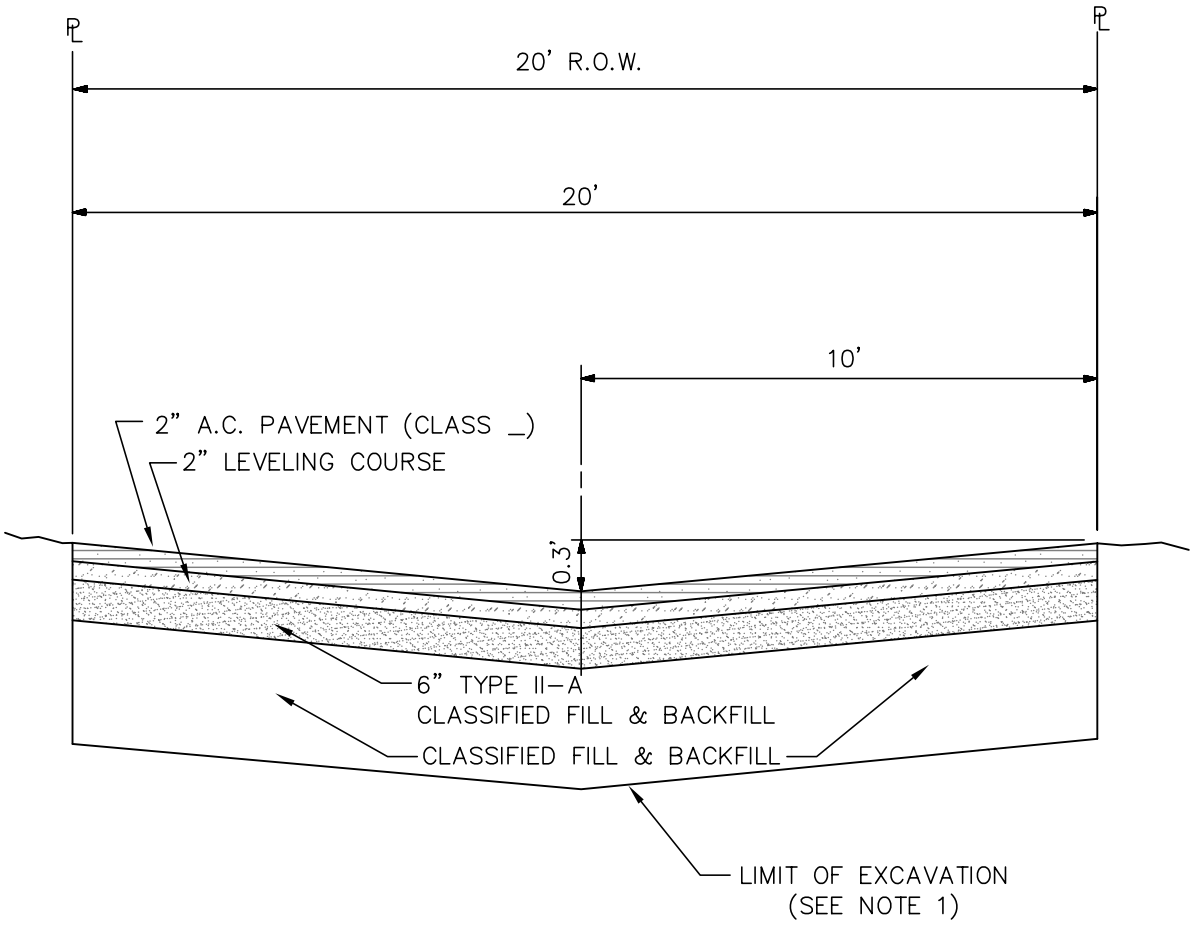

NOTES:

1. ENGINEER WILL DETERMINE THE DEPTH OF EXCAVATION.

MUNICIPALITY OF ANCHORAGE	SCALE: NTS APPROVED: REVISED: 10/07	**TYPICAL SECTION ALLEY**	SECTION # DIV 20 DETAIL # 20-5

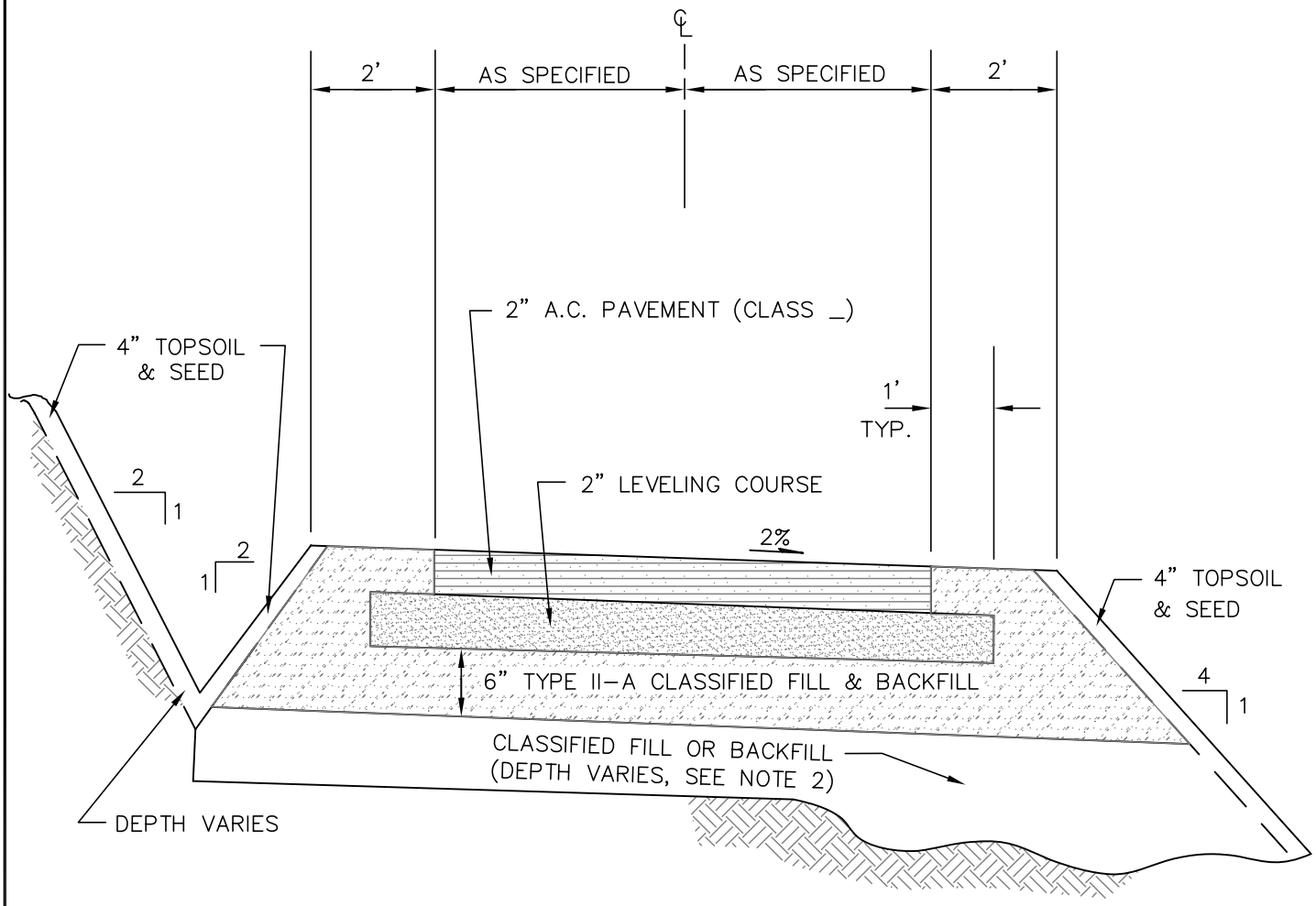

NOTES:

1. DIMENSIONS AND ELEVATIONS SHOWN ON THIS STANDARD DETAIL ARE TYPICAL. PROJECT SPECIFIC DIMENSIONS SHOWN ON THE DRAWINGS SHALL CONTROL.
2. ENGINEER WILL DETERMINE THE DEPTH OF EXCAVATION.
3. ADJUST DEPTH OF DITCH AS NECESSARY FOR POSITIVE DRAINAGE AS SHOWN IN THE DRAWINGS OR AS DIRECTED BY THE ENGINEER.
4. PLACE CROSS CULVERTS AS SHOWN ON THE DRAWINGS OR AS DIRECTED BY THE ENGINEER

MUNICIPALITY OF ANCHORAGE	SCALE: NTS APPROVED: REVISED: 11/08	# TYPICAL SECTION PATHWAY	SECTION # DIV 20 DETAIL # 20-6

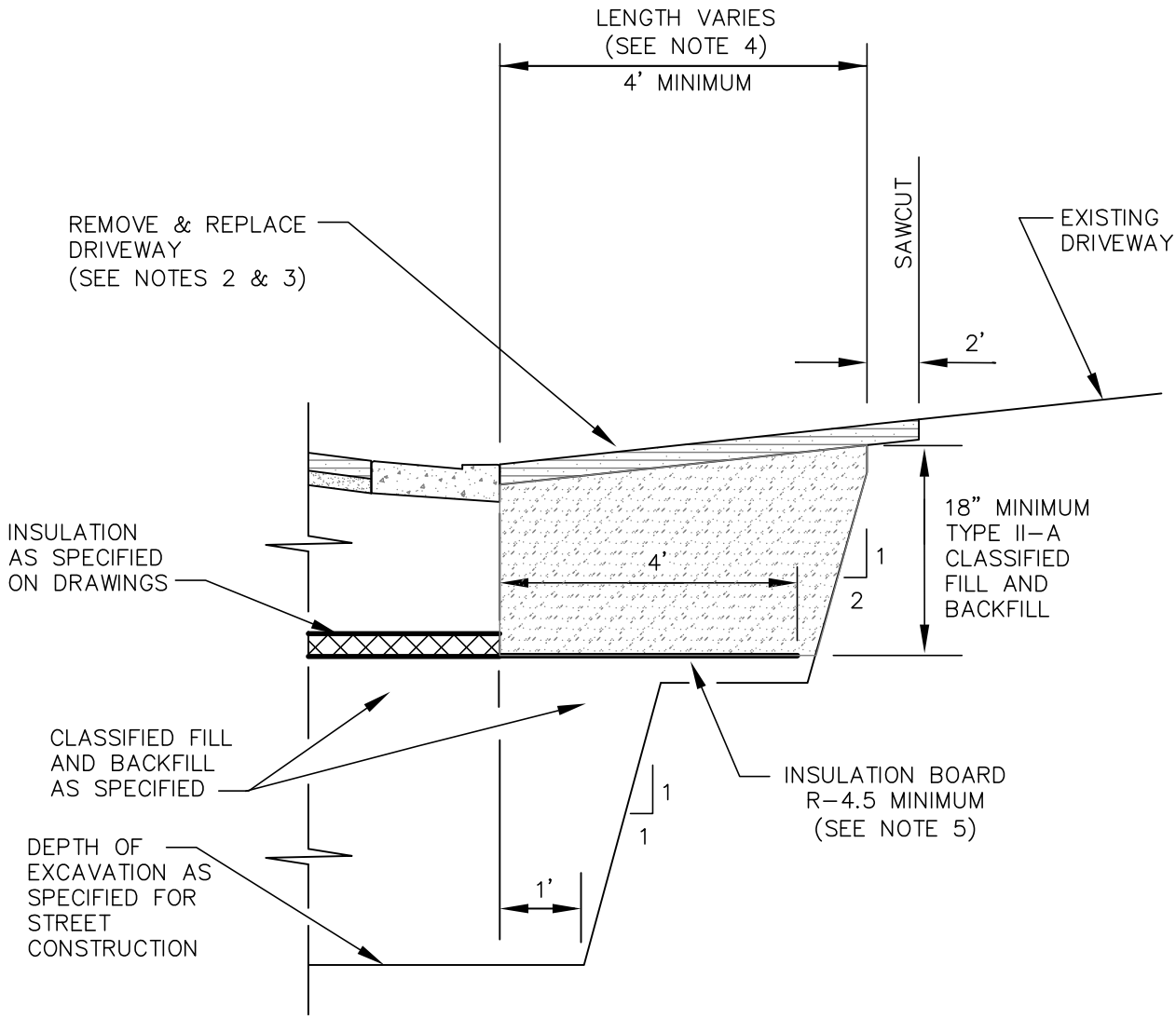

NOTES:

1. SURFACING SHALL MATCH EXISTING DRIVEWAY.
2. ASPHALT PAVEMENT SHALL CONSIST OF 2" LEVELING COURSE AND 2" AC PAVEMENT (CLASS E). APPLY TACK COAT AT SAWCUT AND BACK OF CURB.
3. CONCRETE PAVEMENT SHALL CONSIST OF 6" P.C.C. WITH BROOM FINISH PARALLEL TO CURB AND GUTTER. PROVIDE EXPANSION JOINT AT CURB UNLESS SIDEWALK IS ADJACENT TO CURB AND GUTTER, THEN PROVIDE EXPANSION JOINT ONLY BETWEEN SIDEWALK AND DRIVEWAY.
4. LENGTH OF DRIVEWAY REMOVED AND REPLACED VARIES AS SHOWN IN THE DRAWINGS OR AS DIRECTED BY THE ENGINEER.
5. INSULATION TRANSITION SHALL BE PROVIDED BELOW DRIVEWAY WHEN ADJACENT TO AN INSULATED ROADWAY.

REVISION: 12/09 CHANGED PAVEMENT FROM D TO E IN NOTE 2 & FIXED TYPO; 12/12 CLARIFIED EXPANSION JOINT WHEN SIDEWALK CONSTRUCTED

MUNICIPALITY OF ANCHORAGE	SCALE: NTS APPROVED: REVISED: 12/12	**DRIVEWAY CONNECTION DETAIL**	SECTION # DIV 20 DETAIL # 20-7

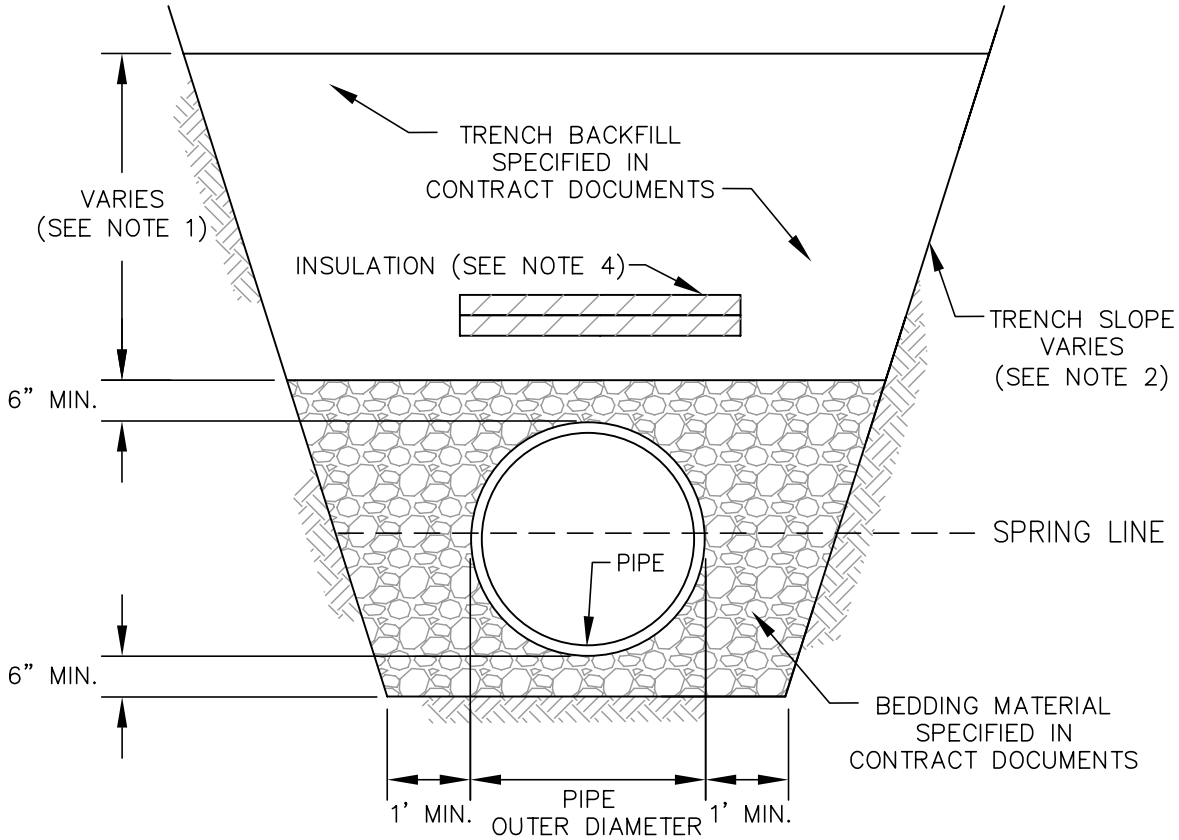

NOTES:

1. TRENCH BACKFILL MATERIAL PLACED AND COMPACTED TO DEPTHS SHOWN IN THE DRAWINGS OR AS DETERMINED BY ENGINEER. COMPACT TRENCH BACKFILL TO A MINIMUM OF 95% MAXIMUM DENSITY.
2. TRENCH WALL SLOPES WILL VARY WITH SOIL STRENGTH AND CHARACTER. SLOPES SHALL CONFORM TO OSHA SAFETY STANDARDS.
3. BACKFILL SHALL BE FREE OF CLAYS AND ORGANIC MATERIALS.
4. WHEN SPECIFIED IN CONTRACT DOCUMENTS, SEE STANDARD DETAIL 20–9 FOR INSULATION DETAILS.

REVISION: REMOVED NOTE 3 REGARDING DUCTILE IRON INSTALLATION; EDITED NOTE 4

MUNICIPALITY OF ANCHORAGE	SCALE: NTS APPROVED: REVISED: 12/09	**TRENCH BACKFILL AND BEDDING LAYOUT**	SECTION # 20.13–20.16 DETAIL # 20–8

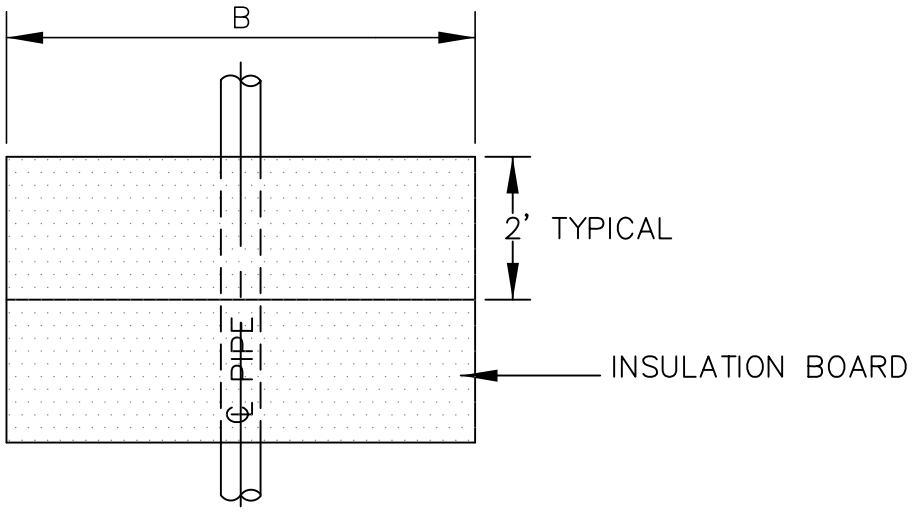

PLAN VIEW

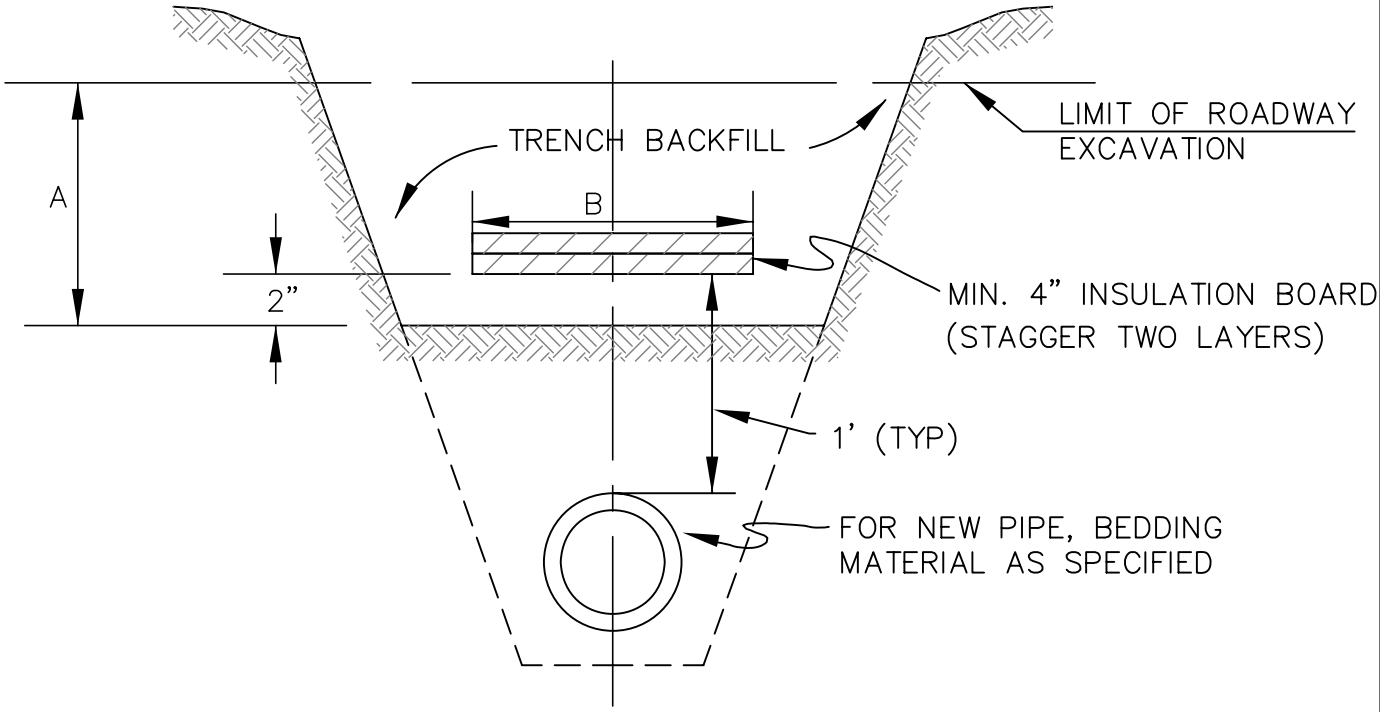

NOTES:

1. THIS DETAIL APPLIES ONLY WHERE INSULATION IS REQUIRED.
2. "A" IS DEPTH FOR PAYMENT UNDER "TRENCH EXCAVATION AND BACKFILL" WHERE INSULATION IS PLACED OVER EXISTING PIPE
3. "B" AS SHOWN ON DRAWINGS OR TO BE DETERMINED BY ENGINEER, FOUR FOOT (4') MINIMUM.

MUNICIPALITY OF ANCHORAGE	SCALE: NTS APPROVED: REVISED: 11/08	**PIPE INSULATION**	SECTION # 20.13 DETAIL # 20–9

GRADING LIMITS

U.S. STANDARD SIEVE	CUMULATIVE % PASSING BY WEIGHT
1"	100
3/8"	60–100
#4	40–85
#10	25–70
#40	5–40
#200	*0–6

*IN ADDITION TO THE GRADING LIMITS LISTED ABOVE, THE FRACTION OF MATERIAL PASSING THE #200 SIEVE SHALL NOT BE GREATER THAN 35% OF THAT FRACTION PASSING THE #4 SIEVE. THE BEDDING MATERIAL SHALL NOT INCLUDE MECHANICALLY FRACTURED MATERIALS.

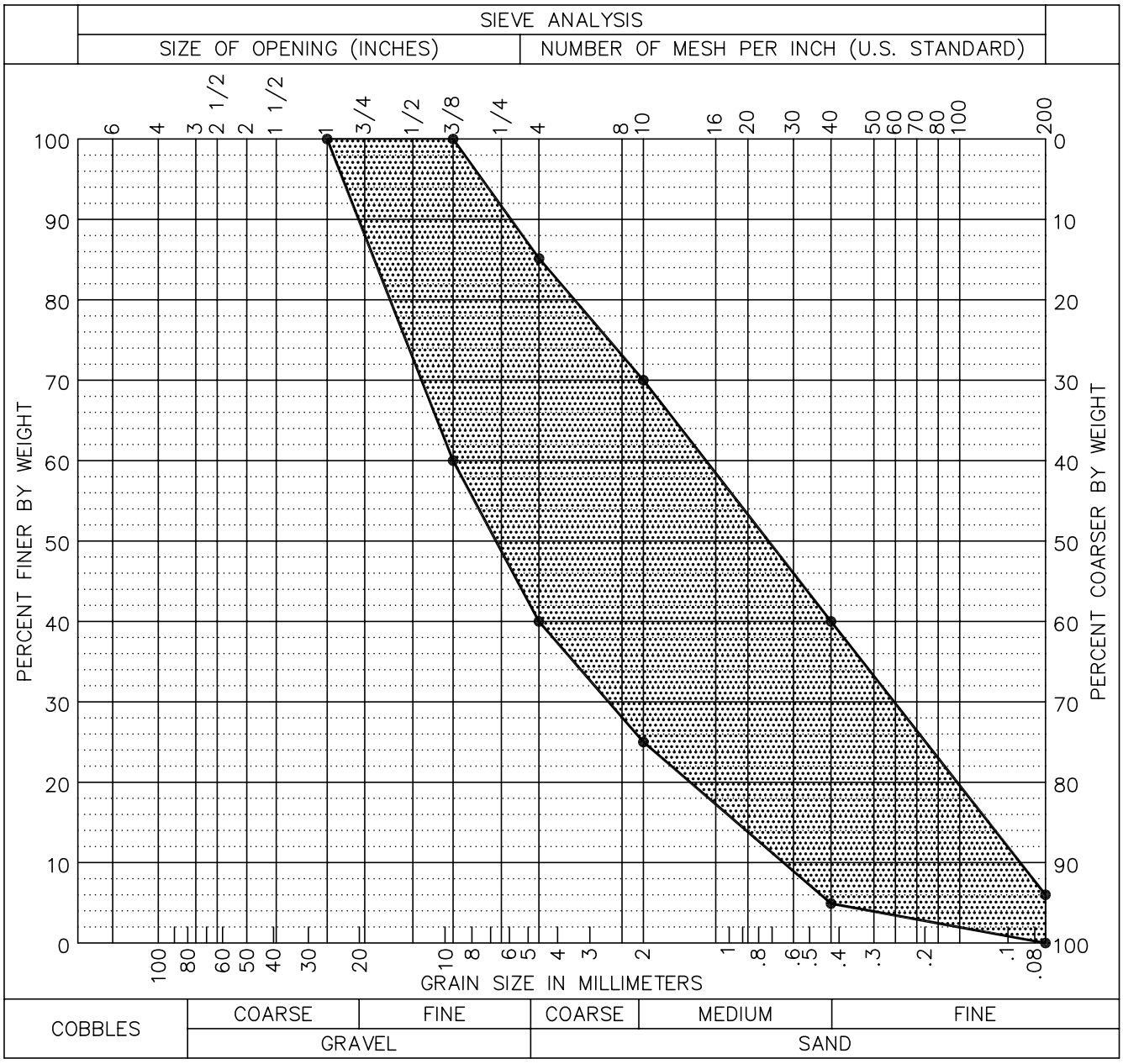

MUNICIPALITY OF ANCHORAGE	SCALE: NTS APPROVED: REVISED: 11/08	**CLASS "B" BEDDING MATERIAL**	SECTION # 20.16 DETAIL # 20–10

GRADING LIMITS

U.S. STANDARD SIEVE	CUMULATIVE % PASSING BY WEIGHT
2"	100
1/2"	40–100
#4	20–75
#10	12–60
#40	2–30
#200	*0–6

*IN ADDITION TO THE GRADING LIMITS LISTED ABOVE, THE FRACTION OF MATERIAL PASSING THE #200 SIEVE SHALL NOT BE GREATER THAN 20% OF THAT FRACTION PASSING THE #4 SIEVE.

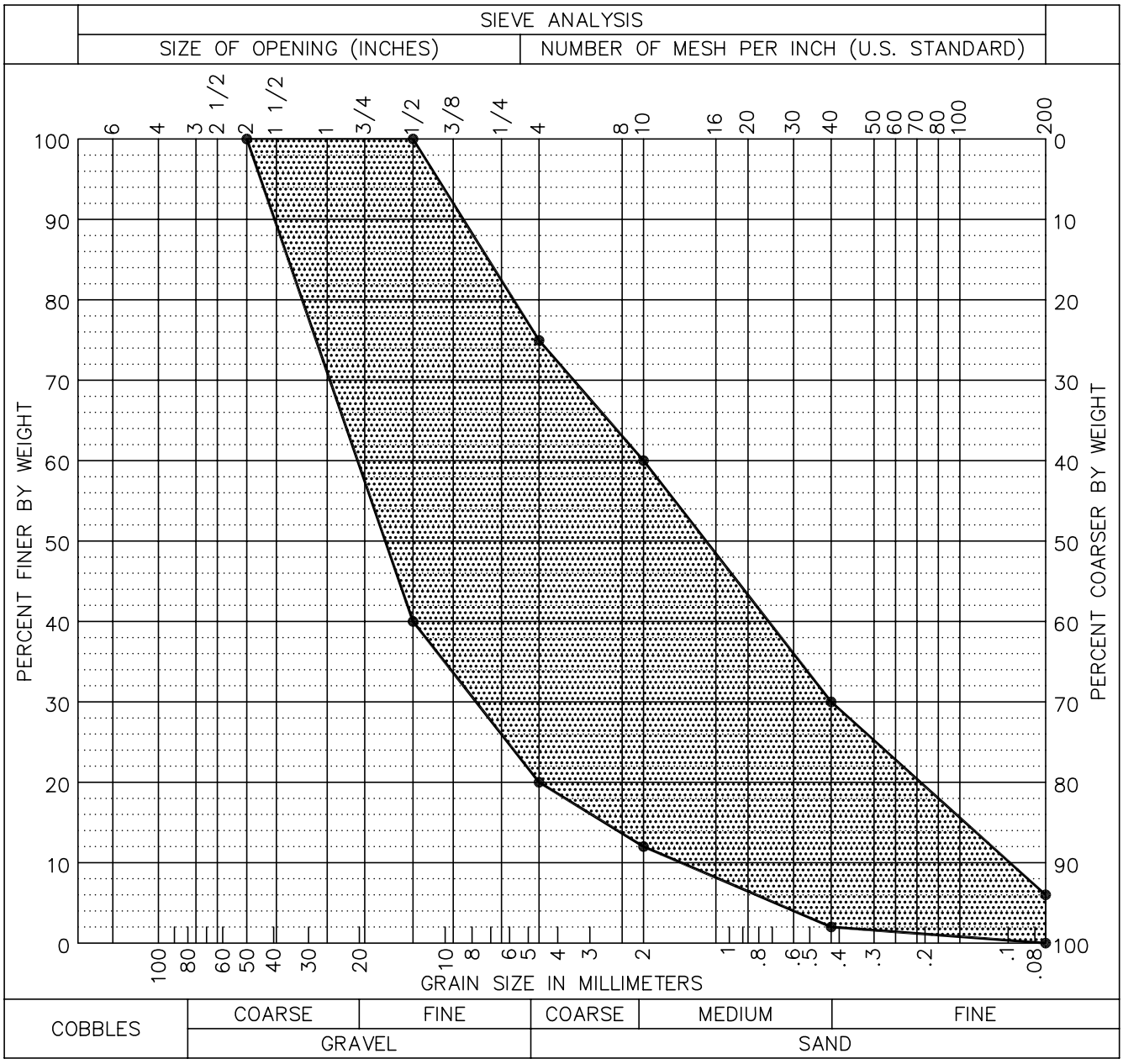

MUNICIPALITY OF ANCHORAGE

SCALE: NTS

APPROVED:

REVISED: 11/08

CLASS "C" BEDDING MATERIAL

SECTION # 20.16

DETAIL # 20–11

GRADING LIMITS

U.S. STANDARD SIEVE	CUMULATIVE % PASSING BY WEIGHT
1"	100
3/4"	90–100
1/2"	50–70
3/8"	20–50
#4	0–10
#200	0–1

THE BEDDING MATERIAL SHALL NOT INCLUDE MECHANICALLY FRACTURED MATERIALS.

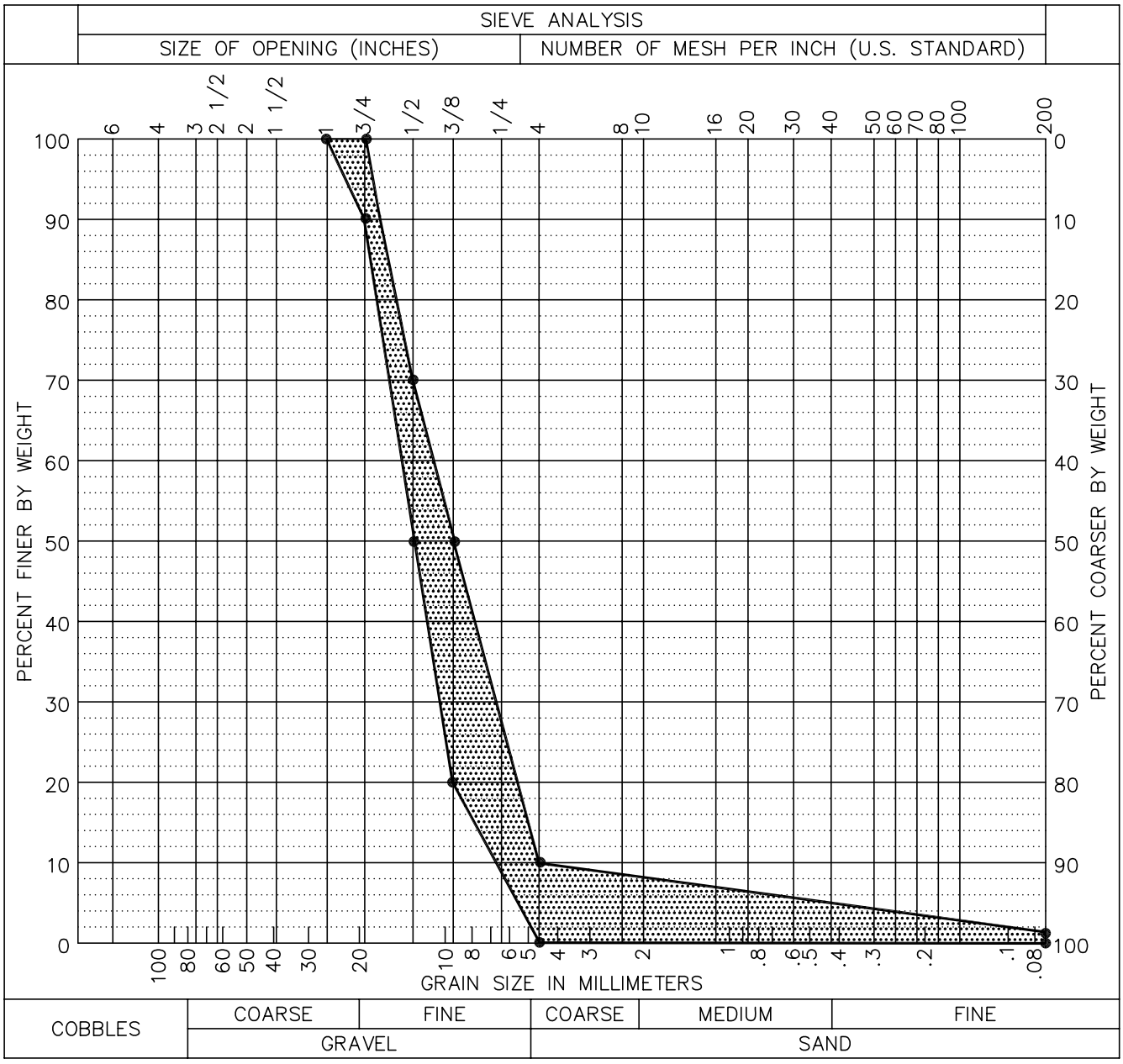

MUNICIPALITY OF ANCHORAGE

SCALE: NTS

APPROVED:

REVISED: 11/08

CLASS "D" BEDDING MATERIAL

SECTION # 20.16

DETAIL # 20–12

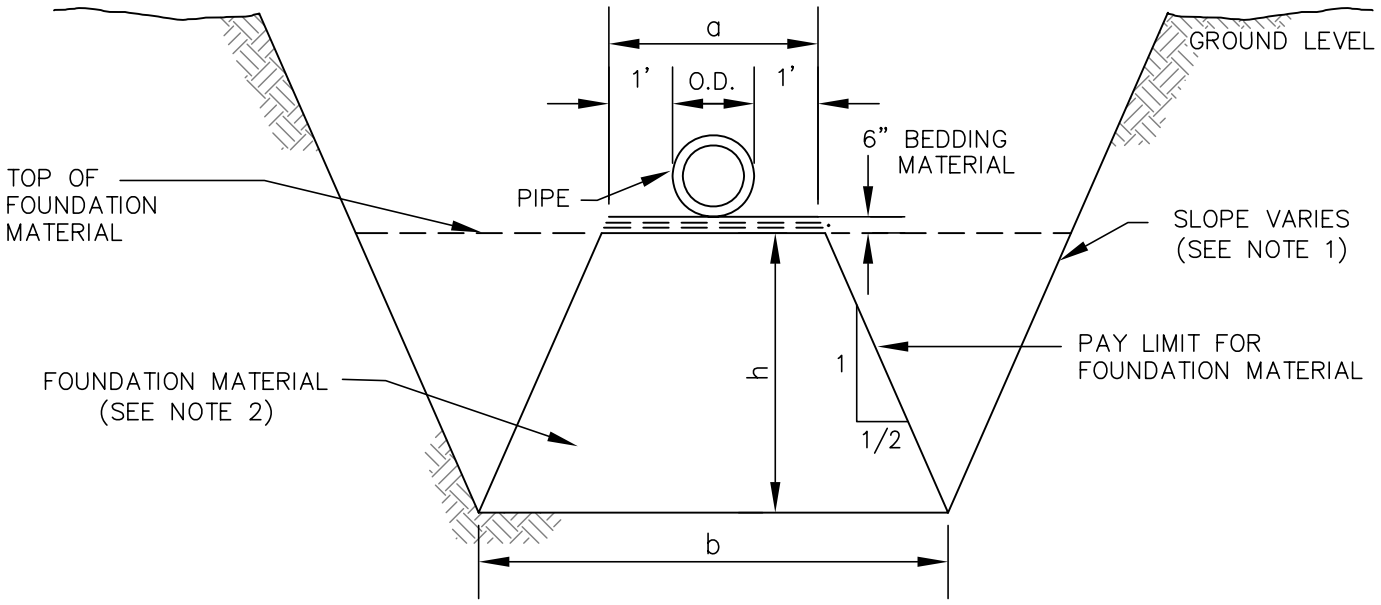

AREA FORMULA

PAY LIMITS
O.D. = OUTSIDE PIPE DIAMETER
a = 2' + O.D.
b = a + h
h = HEIGHT OF FOUNDATION MATERIAL
Area = 1/2 (a + b)h

SAMPLE CALCULATION

FOR 18" SINGLE WALL HDPE,
3' FOUNDATION HEIGHT
OUTSIDE PIPE DIAMETER = 21.8"
h = 3'
a = 2' + 21.8" = 45.8" = 3.82'
b = a + h = 3.82' + 3' = 6.82'
Area = 1/2 (a + b)h
= 1/2 (3.82' + 6.82') * 3'
= 15.96 SQUARE FEET

NOTES:

1. TRENCH WALL SLOPES WILL VARY WITH SOIL STRENGTH AND CHARACTER. SLOPES SHALL CONFORM TO OSHA SAFETY STANDARDS.
2. FOUNDATION MATERIALS PLACED AND COMPACTED TO DEPTHS SHOWN IN THE DRAWINGS OR AS DETERMINED BY THE ENGINEER. COMPACT FOUNDATION MATERIAL TO 95% MAXIMUM DENSITY, UNLESS OTHERWISE SPECIFIED.
3. USE THE AREA FORMULA TO CALCULATE THE AREA OF PAY LIMITS FOR ALL TYPES AND SIZES OF PIPE.

MUNICIPALITY OF ANCHORAGE	SCALE: NTS APPROVED: REVISED: 11/08	FOUNDATION MATERIALS	SECTION # 20.19 DETAIL # 20–13

GRADING LIMITS

U.S. STANDARD SIEVE	CUMULATIVE % PASSING BY WEIGHT
8"	100
3"	70–100
1–1/2"	55–100
3/4"	45–85
#4	20–60
#10	12–50
#40	4–30
#200	*2–6

*IN ADDITION TO THE GRADING LIMITS LISTED ABOVE, THE FRACTION OF MATERIAL PASSING THE #200 SIEVE SHALL NOT BE GREATER THAN 20% OF THAT FRACTION PASSING THE #4 SIEVE.

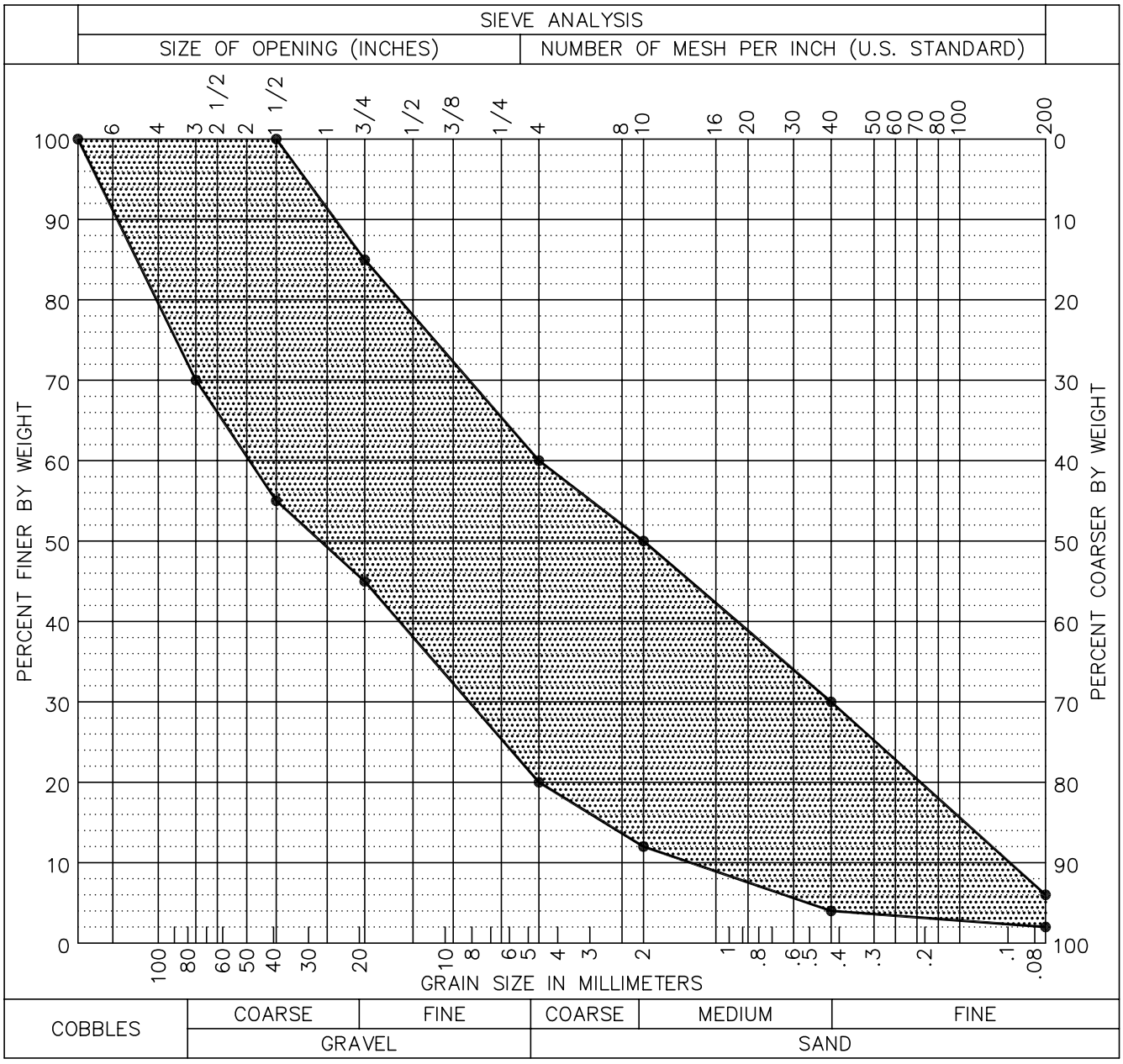

MUNICIPALITY OF ANCHORAGE

SCALE: NTS

APPROVED:

REVISED: 11/08

TYPE II CLASSIFIED FILL AND BACKFILL

SECTION # 20.21

DETAIL # 20–14

GRADING LIMITS

U.S. STANDARD SIEVE	CUMULATIVE % PASSING BY WEIGHT
3"	100
3/4"	50–100
#4	25–60
#10	15–50
#40	4–30
#200	*2–6

*IN ADDITION TO THE GRADING LIMITS LISTED ABOVE, THE FRACTION OF MATERIAL PASSING THE #200 SIEVE SHALL NOT BE GREATER THAN 20% OF THAT FRACTION PASSING THE #4 SIEVE.

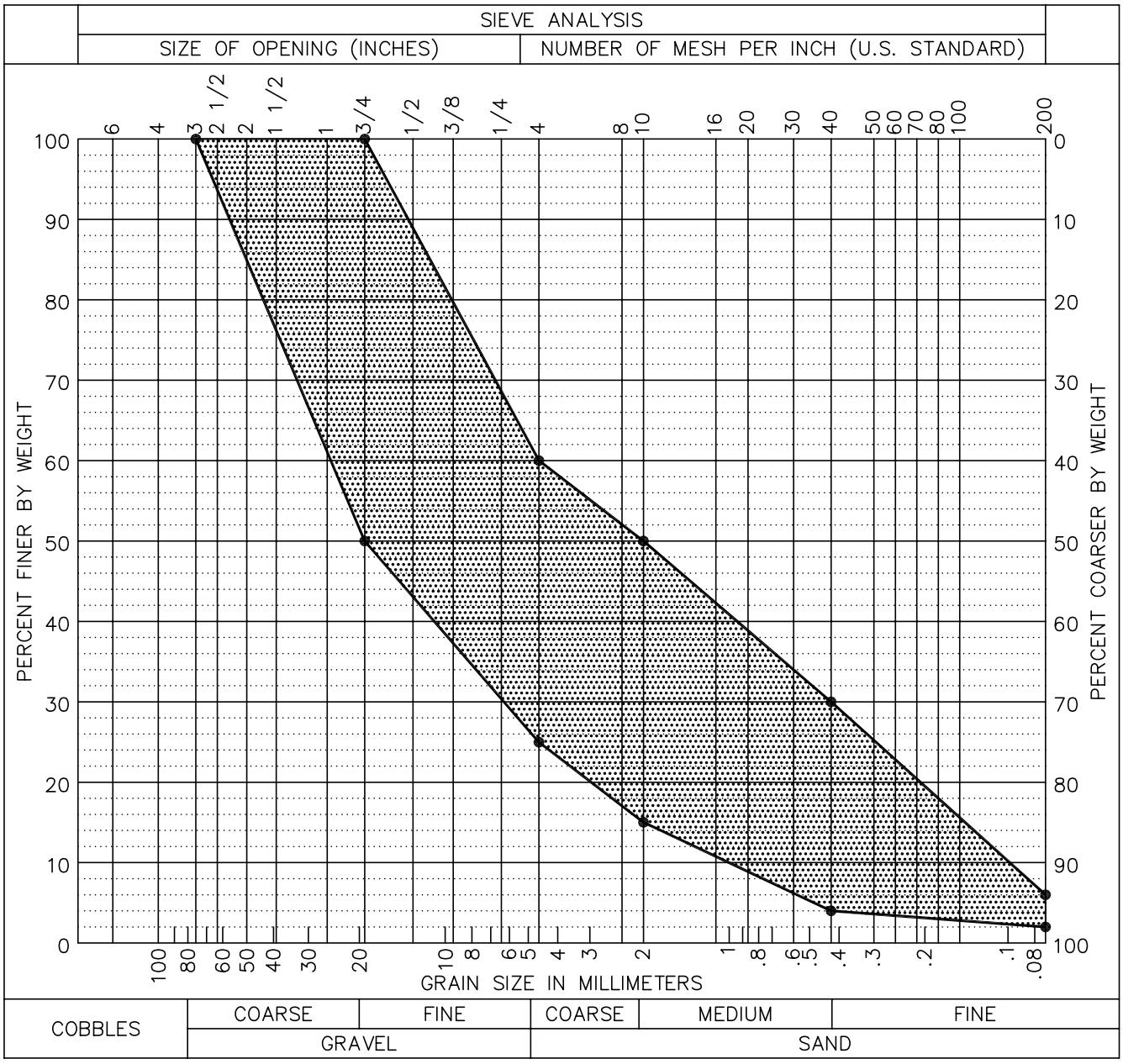

MUNICIPALITY OF ANCHORAGE

SCALE: NTS

APPROVED:

REVISED: 11/08

TYPE II-A CLASSIFIED FILL AND BACKFILL

SECTION # 20.21

DETAIL # 20–15

GRADING LIMITS

U.S. STANDARD SIEVE	CUMULATIVE % PASSING BY WEIGHT
3"	100
1 1/2"	60–90
3/4"	40–80
#4	25–55
#10	15–45
#40	4–30
#200	2–6

*IN ADDITION TO THE GRADING LIMITS LISTED ABOVE, AT LEAST THIRTY PERCENT (30%) OF THE COARSE AGGREGATE PARTICLES SHALL HAVE ONE OR MORE MECHANICALLY FRACTURED FACE.

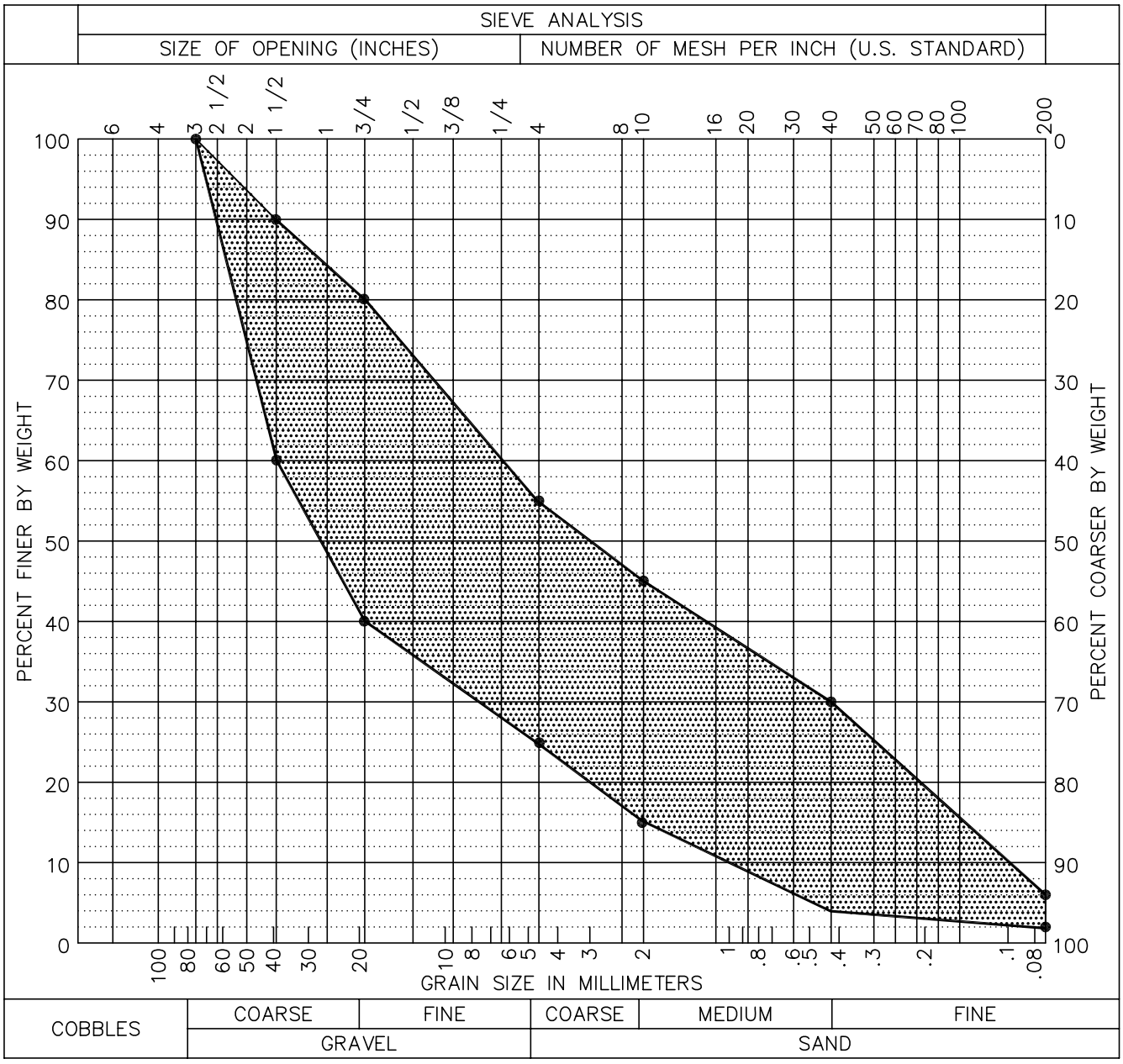

MUNICIPALITY OF ANCHORAGE

SCALE: NTS

APPROVED:

REVISED: 11/08

TYPE V CLASSIFIED FILL AND BACKFILL

SECTION # 20.21

DETAIL # 20–16

GRADING LIMITS

U.S. STANDARD SIEVE	CUMULATIVE % PASSING BY WEIGHT
2"	100
1 1/2"	65–95
3/4"	50–80
1/2"	30–60
#4	20–50
#10	10–30
#40	5–25
#200	2–6

*IN ADDITION TO THE GRADING LIMITS LISTED ABOVE AT LEAST FORTY PERCENT (40%) OF THE COARSE AGGREGATE PARTICLES SHALL HAVE ONE OR MORE MECHANICALLY FRACTURED FACE.

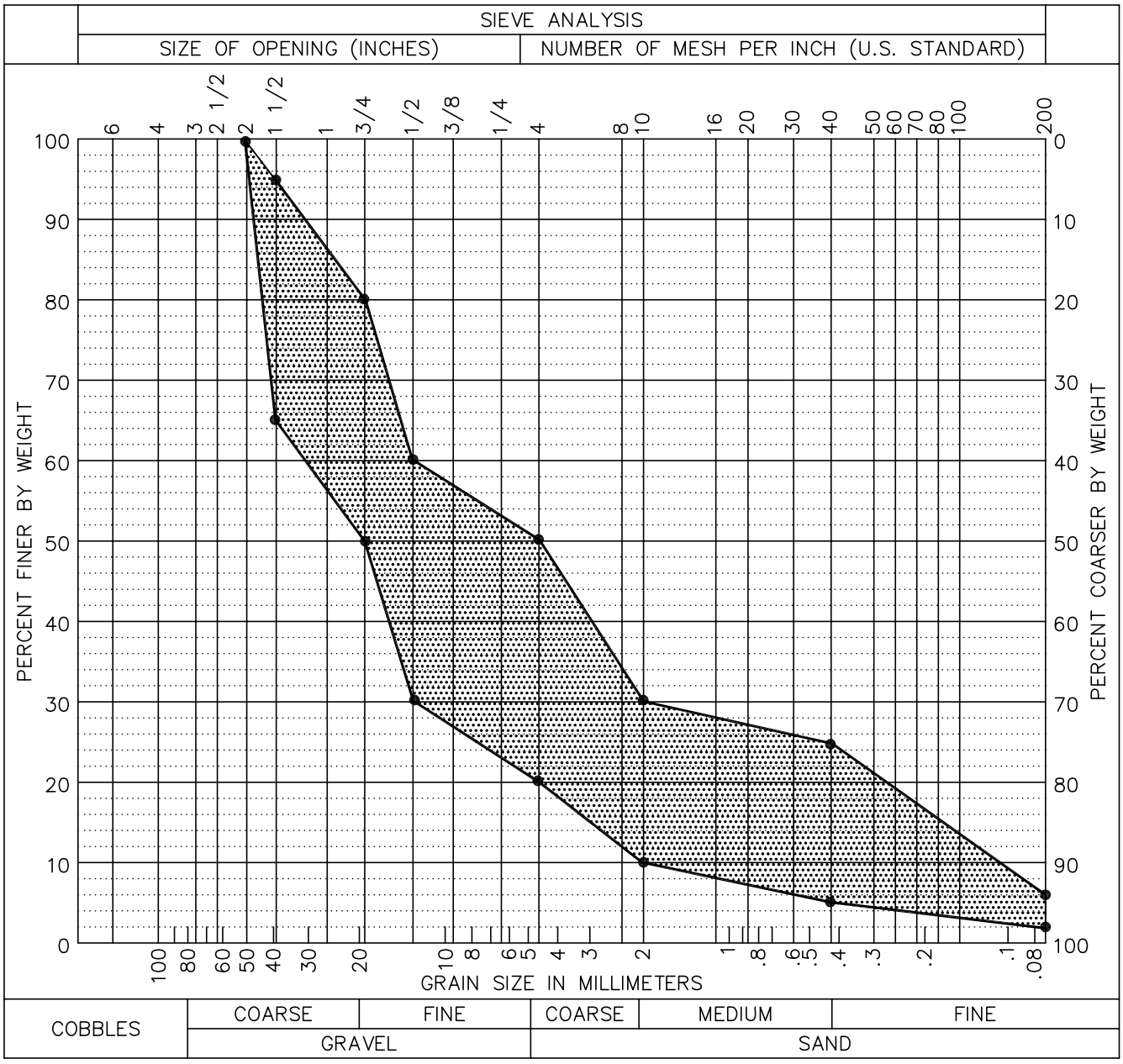

MUNICIPALITY OF ANCHORAGE

SCALE: NTS

APPROVED:

REVISED: 11/08

TYPE VI CLASSIFIED FILL AND BACKFILL

SECTION # 20.21

DETAIL # 20–17

GRADING LIMITS

U.S. STANDARD SIEVE	CUMULATIVE % PASSING BY WEIGHT
1"	100
3/4"	70–100
3/8"	50–80
#4	35–65
#8	20–50
#50	8–28
#200	*2–6

*IN ADDITION TO THE GRADING LIMITS LISTED ABOVE, THE FRACTION OF MATERIAL PASSING THE #200 SIEVE SHALL NOT BE GREATER THAN 75% OF THAT FRACTION PASSING THE #50 SIEVE.

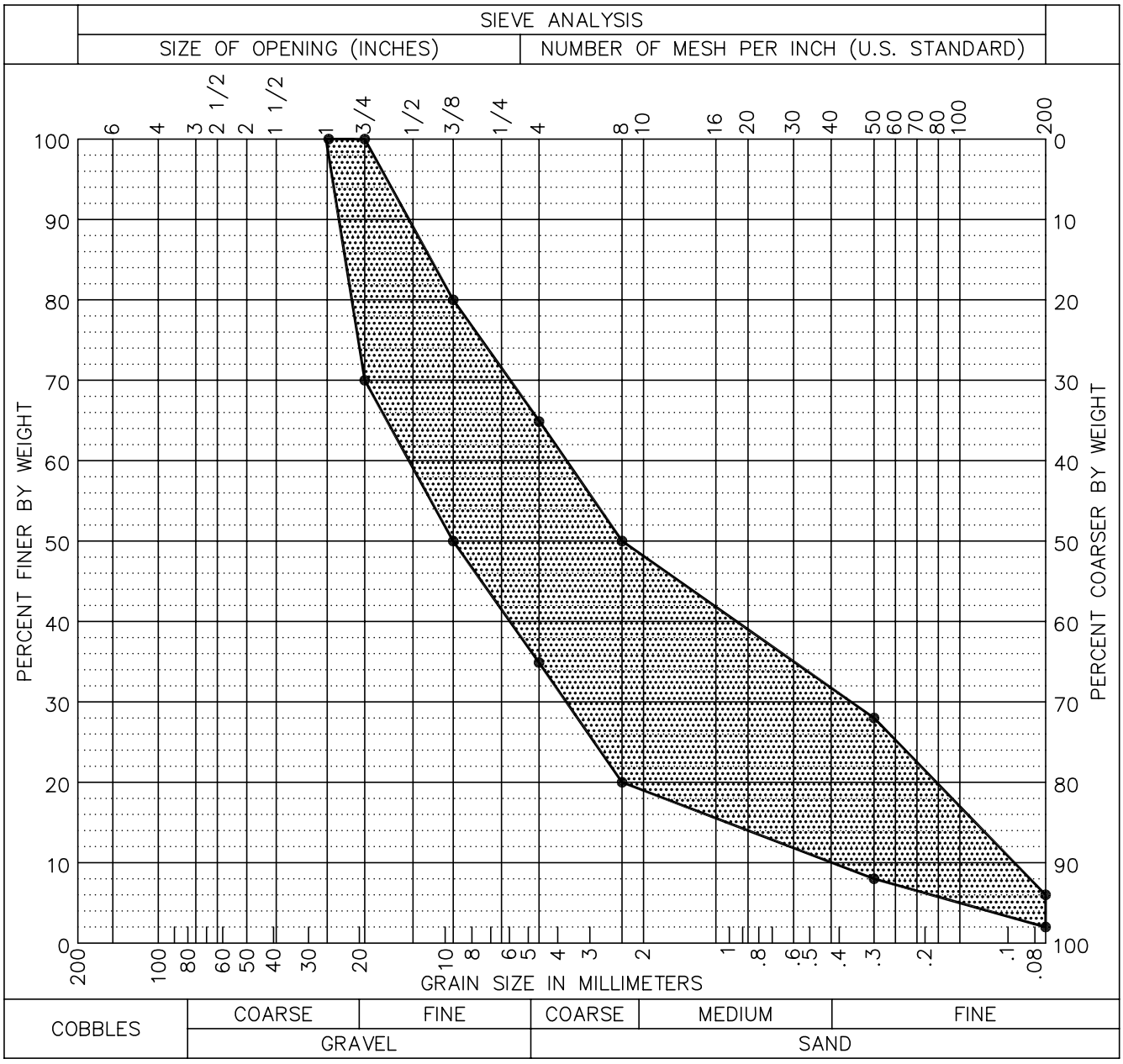

MUNICIPALITY OF ANCHORAGE

SCALE: NTS

APPROVED:

REVISED: 10/08

LEVELING COURSE

SECTION # 20.22

DETAIL # 20–18

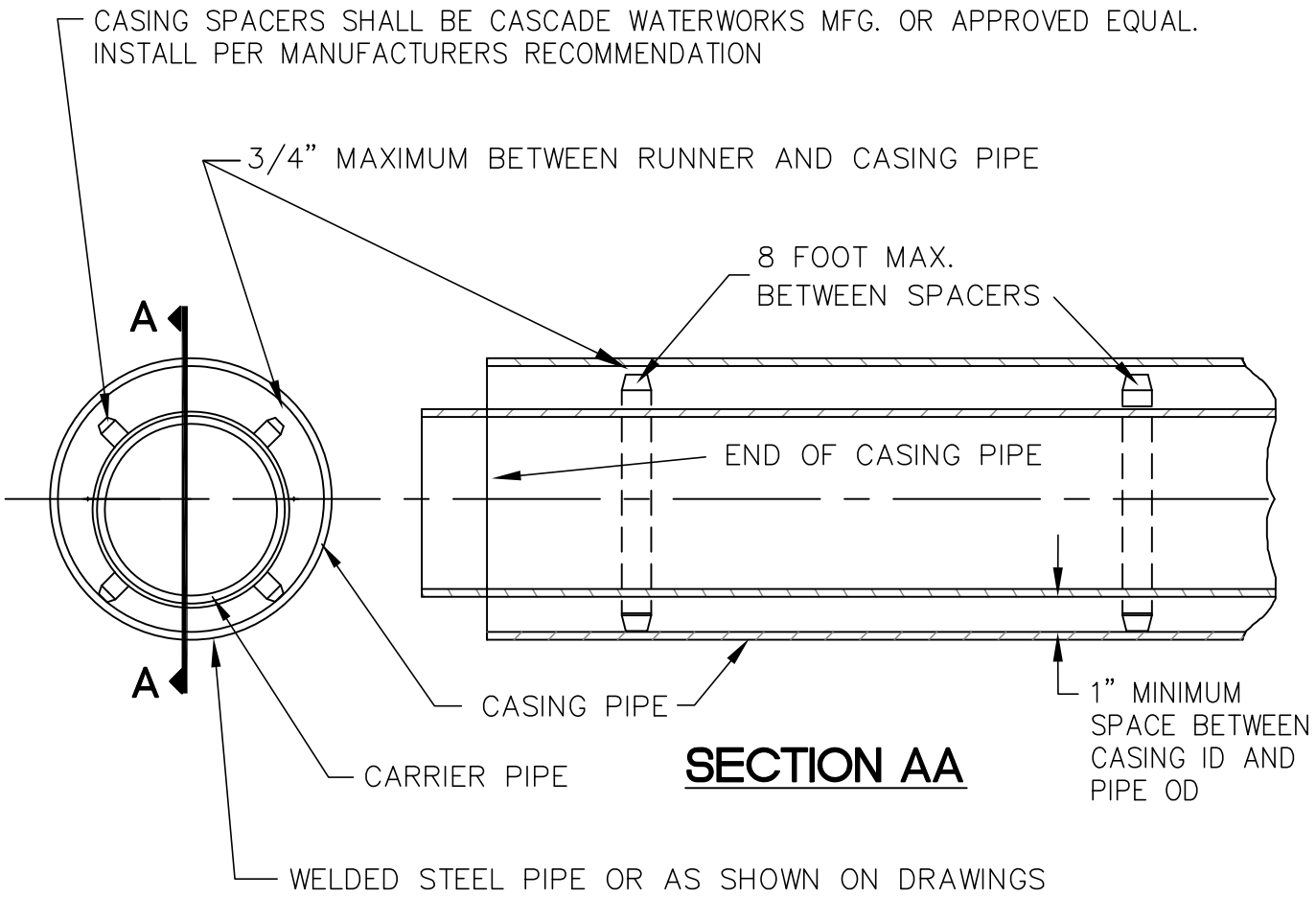

SECTION AA

NOTES:

1. CASING PIPE SHALL BE WELDED STEEL PIPE, AND GAUGE SHALL BE AS SHOWN ON DRAWINGS. CASING PIPE SHALL BE DESIGNED FOR ALL LOADS FOR EACH APPLICATION.
2. INSTALL CASING SPACERS A MAXIMUM OF ONE FOOT (1') FROM EACH SIDE OF EACH PIPE JOINT. CASING SPACERS SHALL BE CASCADE WATERWORKS MFG. STAINLESS STEEL WITH POLYETHYLENE RUNNERS OR APPROVED EQUAL.
3. ENDS OF CASING PIPE SHALL BE SEALED WITH SYNTHETIC RUBBER SEAL WITH STAINLESS STEEL BANDS. CASING SHALL BE WATERTIGHT. END CAPS MAY BE DELETED BY THE CORROSION ENGINEER.
4. CARRIER PIPE SHALL HAVE FIELD LOK® GASKETS OR APPROVED EQUAL INSTALLED ENTIRE LENGTH OF CASING PIPE AND AT A MINIMUM SHALL EXTEND ONE FULL PIPE LENGTH BEYOND END OF CASING.
5. JOINT BONDS OR THAW WIRES SHALL BE INSTALLED THE ENTIRE LENGTH OF CARRIER PIPE PER AWWU DCPM CORROSION CONTROL MAGNESIUM BAG ANODE INSTALLATION DETAIL.
6. CORROSION ANALYSIS SHALL BE PERFORMED FOR CASING PIPE.
7. FILL CARRIER PIPE WITH WATER PRIOR TO FILLING ANNULAR SPACE WITH CDF GROUT.
8. GROUT ANNULAR SPACE WITH CONTROLLED DENSITY FILL (CDF) 50–150 PSI 28 DAY STRENGTH, pH MIN II.
9. VOIDS CREATED BY CASING INSTALLATION ON OUTSIDE OF CASING SHALL BE PRESSURE GROUTED.

MUNICIPALITY OF ANCHORAGE	SCALE: NTS APPROVED: REVISED: 1/12	**PIPE ENCASEMENT**	SECTION # 20.29 DETAIL # 20–19

REVISION: 1/12 REVISED FOR ANNULAR SPACE, CORROSION, & ALIGNMENT

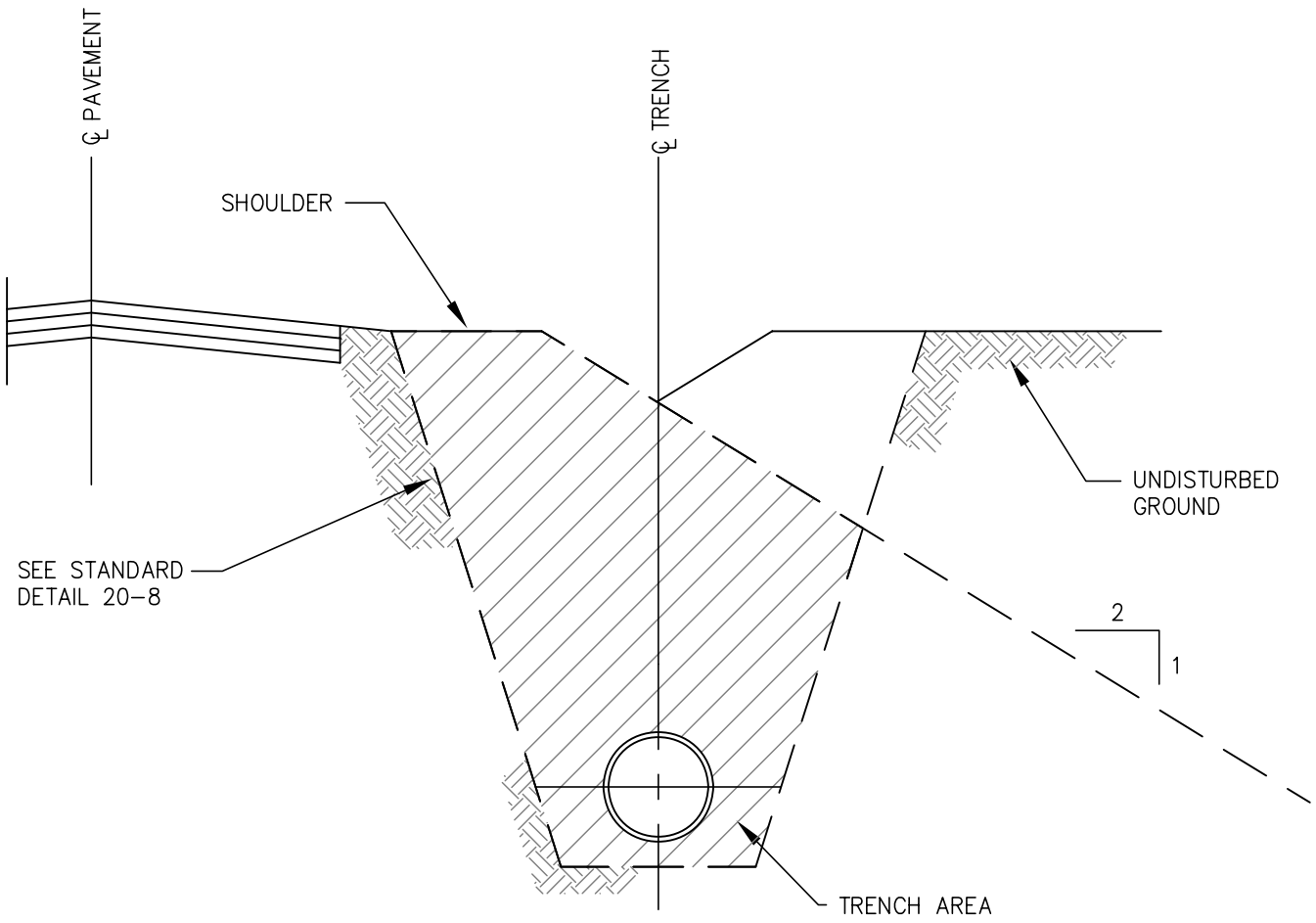

NOTES:

1. REPLACE ALL MATERIAL THAT IS TO BE BACKFILLED WITHIN THE ABOVE–DESCRIBED AREA IN ONE–FOOT LIFTS PER DIVISION 20, SECTION 20.21, ARTICLE 21.3 – CONSTRUCTION.
2. BACKFILL SHALL BE FREE OF CLAYS AND ORGANIC MATERIALS.
3. COMPACT BACKFILL BY MECHANICAL MEANS WITHOUT THE AID OF WATER.
4. RESHAPE DITCH LINE IN SUCH A MANNER AS TO PROVIDE PROPER DRAINAGE; REPLACE SHOULDER OF THE ROAD AT A UNIFORM SLOPE NOT TO EXCEED 2 TO 1.

MUNICIPALITY OF ANCHORAGE	SCALE: NTS APPROVED: REVISED: 11/08	# COMPACTION OF BACKFILL WITHIN RIGHT-OF-WAY	SECTION # 20.30 DETAIL # 20–20

MUNICIPALITY OF ANCHORAGE
STANDARD SPECIFICATIONS

DIVISION 30
PORTLAND CEMENT CONCRETE

STANDARD CONSTRUCTION SPECIFICATIONS FOR
PORTLAND CEMENT CONCRETE
DIVISION 30
I N D E X

SECTION 30.01	GENERAL	1
Article 1.1	Scope of Work	1
Article 1.2	Applicable Standards	1
Article 1.3	Materials	2
Article 1.4	Mix	5
Article 1.5	Subbase	6
Article 1.6	Mix Requirements for Classes of Concrete	6
Article 1.7	Ready-Mixed Concrete	8
Article 1.8	Sampling and Testing	9
Article 1.9	Weather Limitations	9
Article 1.10	Protection of Work	9
Article 1.11	Clean-up	10
SECTION 30.02	PORTLAND CEMENT CONCRETE, CURB AND GUTTER AND VALLEY GUTTER	11
Article 2.1	Description	11
Article 2.2	Materials	11
Article 2.3	Construction	12
Article 2.4	Measurement	16
Article 2.5	Basis of Payment	16
SECTION 30.03	PORTLAND CEMENT CONCRETE SIDEWALKS	17
Article 3.1	Description	17
Article 3.2	Materials	17
Article 3.3	Construction	17
Article 3.4	Measurement	19
Article 3.5	Basis of Payment	20
SECTION 30.04	PORTLAND CEMENT CONCRETE CURB RAMPS	21
Article 4.1	General	21
Article 4.2	Materials	21
Article 4.3	Construction	22
Article 4.4	Tolerances	23
Article 4.5	Measurement	23
Article 4.6	Basis of Payment	24
SECTION 30.05	STRUCTURES AND RETAINING WALLS	25
Article 5.1	Description	25
Article 5.2	Construction	25
Article 5.3	Measurement	28
Article 5.4	Basis of Payment	29

SECTION 30.06 CONCRETE MASONRY RETAINING WALLS 30
Article 6.1 Description 30
Article 6.2 Construction 30
Article 6.3 Measurement 32
Article 6.4 Basis of Payment 32

SECTION 30.07 CONCRETE – BUILDING STRUCTURES 33
Article 7.1 Description 33
Article 7.2 Materials 33
Article 7.3 Formwork Construction 33
Article 7.4 Concrete 35
Article 7.5 Measurement 37
Article 7.6 Basis of Payment 37

SECTION 30.08 PORTLAND CEMENT CONCRETE CLUSTER MAILBOX BASE 38
Article 8.1 General 38
Article 8.2 Materials and Installation 38
Article 8.3 Construction 38
Article 8.4 Measurement 38
Article 8.5 Basis of Payment 38

SECTION 30.09 CONCRETE PARKING BUMPERS 39
Article 9.1 Description 39
Article 9.2 Material 39
Article 9.3 Construction 39
Article 9.4 Basis of Payment 39

SECTION 30.10 IMPRINTED COLORED CONCRETE 40
Article 10.1 General 40
Article 10.2 Materials 40
Article 10.3 Construction 40
Article 10.4 Measurement 41
Article 10.5 Basis of Payment 41

SECTION 30.11 SIDEWALK JOINT SEALANT 42
Article 11.1 General 42
Article 11.2 Materials 42
Article 11.3 Construction 42
Article 11.4 Measurement 42
Article 11.5 Basis of Payment 42

STANDARD CONSTRUCTION SPECIFICATIONS FOR PORTLAND CEMENT CONCRETE DIVISION 30

SECTION 30.01 GENERAL

Article 1.1 Scope of Work

The Work covered by this Section consists of providing all plant, labor, equipment, supplies, material, transportation, handling, storage and protection for performing all operations in connection with the placement of Portland Cement Concrete in accordance with the Specifications and the Drawings.

Article 1.2 Applicable Standards

The latest revision of the following standards of the American Society for Testing and Materials (ASTM) and American Society of State Highway and Transportation Officials (AASHTO) are hereby made a part of these Specifications:

American Concrete Institute		"Manual of Concrete Practice"
Concrete Reinforcing Steel Institute		"Manual of Standard Practice"
ASTM A-185	AASHTO M-55	Specification for Welded Steel Wire Fabric for Concrete
ASTM A-615	AASHTO M-31	Specification for Billet-Steel Bars for Concrete Reinforcement
ASTM C-31	AASHTO T-23	Method of Making and Curing Concrete Compression and Flexure Test Specimens in the Field
ASTM C-33		Specification for Concrete Aggregates
ASTM C-330		Specification for Lightweight Aggregates for Structural Concrete
ASTM C-39	AASHTO T-22	Test for Compressive Strength of Molded Concrete Cylinders.
ASTM C-40	AASHTO T-21	Test for Organic Impurities in Sands for Concrete
ASTM C-42	AASHTO T-24	Method of Securing, Preparing and Testing Specimens from Hardened Concrete for Compression and Flexure Strengths
ASTM C-90		Hollow Load-Bearing Concrete Masonry

ASTM C-94	AASHTO M-157	Specification for Ready-Mix Concrete
ASTM C-150	AASHTO T-119	Specification for Portland Cement
ASTM C-156	AASHTO T-155	Test for Water Retention Efficiency of Liquid Membrane-Forming Compounds and Impermeable Sheet Materials for Curing Concrete.
ASTM C-171	AASHTO M-171	Specification for Waterproof Paper for Curing Concrete
ASTM C-172	AASHTO T-141	Sampling Fresh Concrete
ASTM C-192	AASHTO T-126	Method of Making and Curing Concrete Compression and Flexure Test Specimens in the Laboratory
ASTM C-226	AASHTO M-134	Specification for Air-Entraining Additions for Use in the Manufacture of Air-Entraining Portland Cement
ASTM C-231	AASHTO T-152	Test for Air Content of Freshly Mixed Concrete by the Pressure Method
ASTM C-260	AASHTO M-154	Specification for Air-Entraining Admixture for Concrete
ASTM C-270		Mortar for Unit Masonry (Including Tentative Revision)
ASTM C-309	AASHTO M-148	Specification for Liquid Membrane-Forming Compounds for Curing Concrete
ASTM C-494	AASHTO M-194	Specifications for Chemical Admixtures for Concrete
ASTM D-1751	AASHTO M-213	Specification for Preformed Expansion Joint Filler for Concrete Paving and Structural Construction (Nonextruding and Resilient Bituminous Types)
AASHTO M-6		Specification for Fine Aggregate for Portland Cement Concrete
AASHTO M-32		Specification for Cold Drawn Steel Wire for Concrete Reinforcement Cement
AASHTO M-80		Specification for Coarse Aggregate for Portland Concrete

Article 1.3 Materials

A. Reinforcing Steel

Concrete reinforcing shall be deformed steel bars conforming to the requirements of ASTM A-615 (AASHTO M-31). It shall be free from loose scales, excessive rust,

and coatings of any character which will reduce the bond between steel and concrete.

If reinforcing bars are to be welded, these Specifications shall be supplemented by requirements assuring satisfactory weldability in conformity with AWS D12.1, "Recommended Practices for Welding Reinforcing Steel, Metal Inserts and Connections in Reinforced Concrete Construction."

B. Welded Steel Wire Fabric

The welded steel wire fabric shall be cold-drawn steel wires or galvanized, fabricated into mesh formed by the process of electric welding. The grade of wire shall conform to AASHTO M-32. Welded Steel Wire Fabric shall conform to ASTM A-185 (AASHTO M-55).

C. Cement

The cement shall be of a recognized standard brand of Portland Cement conforming to the specification requirements listed below and of a type listed below:

Specification	Type Portland Cement
ASTM C-150	Type I, III*
AASHTO M-85	Type I, III*

*Type III cement may be used upon written authorization of the Engineer subject to the following modification:

Minimum design strength shall be achieved in seven (7) days in lieu of the twenty-eight (28) days required for Type I cement.

For architectural concrete only one brand of cement shall be used unless otherwise approved by the Engineer. When no type cement is specified, the requirements of Type I shall govern.

Cement reclaimed from cleaning bags or leaking containers shall not be used.

The Engineer may require an additional one-half sack of Portland concrete over the design specification.

D. Water

Water used for the mixing of concrete shall be clean and free of oil or acid, and shall not contain salt, alkali, or organic matter.

E. Aggregates

Aggregates for Portland Cement Concrete shall be well graded, clean, hard gravel, and coarse sand, non-frost susceptible material, and free of deleterious (organic)

matter, and coatings of silt or clay. The gradations shall be determined by standard laboratory sieves with square openings. Material retained on a No. 4 screen shall be classified as coarse aggregate, which shall conform to the requirements of AASHTO M-80 and have the following limits of gradation:

Coarse Aggregate for Portland Cement Concrete

	AASHTO No. 67 (¾" to #4)	AASHTO No. 4 (1 ½" to ¾")
U.S. Standard Sieve Size	Cumulative % Passing By Weight	Cumulative % Passing By Weight
2"	-----	100
1 ½"	-----	90–100
1"	100	20–55
3/4"	90–100	0–15
1/2"	-----	-----
3/8"	20–55	0–5
#4	0-10	-----
#8	0-5	-----

All material passing a No. 4 sieve shall be classified as fine aggregate and shall conform to the requirements of AASHTO M-6 and have the following gradation:

Fine Aggregate for Portland Cement Concrete

U.S. Standard Sieve Size	Cumulative % Passing By Weight
3/8"	100
#4	95-100
#8	80-100
#16	50-85
#30	25-60
#50	10-30
#100	2-10

Aggregates shall consist of washed sand gravel; fine and coarse aggregates shall be regarded as separate ingredients. Aggregates for normal weight concrete shall conform to the requirements of ASTM C-33 and aggregates for light weight concrete, shall conform to the requirements of ASTM C-330.

The maximum size of coarse aggregates shall not exceed one and one-half inches (1 1/2") nor one-fifth (1/5) of the narrowest dimension between the forms nor three-quarters (3/4) of the clear spacing between reinforcing bars nor one-third (1/3) of the depth of slabs. The combined aggregates, coarse and fine, shall be of such composition of sizes that when separated on the No. 4 standard sieve, the weight passing shall not be less than thirty percent (30%) nor greater than fifty percent (50%) of the total weight.

The volume removed by sedimentation shall not exceed three percent (3%). Proportioning of the coarse and fine aggregate shall be obtained by weight. The weighing equipment shall be accurate within one percent (1%) of the net weight of the batch and shall permit adjustment for variations in the water content of the aggregate. Batching for fractional sacks of cement will not be permitted unless the cement is weighed for each batch. The water added shall be measured by an approved calibrated device capable of metering within one percent (1%) of the total amount of water to be used for each batch.

F. Air-Entrainment

Air-entrainment agents shall be used in all concrete. Entrainment shall be achieved by the addition of an approved air-entraining mixture to the concrete mix. Air-entrainment shall conform to ASTM C-231 (AASHTO T-152). Refer to Article 1.6 - Mix Requirements for Classes of Concrete for air-entrainment percentages for each class of concrete.

G. Curing Materials

Curing materials shall be one the following types as approved by the Engineer:

1. Kraft paper conforming to the requirements of ASTM C-171 (AASHTO M-171).

2. Mats of commercial quality and of a type used for curing concrete.

3. Burlap of commercial quality weighing not less than fourteen (14) ounces per square yard.

4. Membrane curing compound conforming to the requirements of ASTM C-309 (AASHTO M-148).

H. Expansion Joints

Premolded joint filler for use in expansion joints shall conform to the requirements of ASTM D-1751 (AASHTO M-213).

Article 1.4 Mix

Portland Cement Concrete may be mixed at a central mixing plant or in transit mixers. All mixing equipment and operations shall conform to the requirements of ASTM C-94

(AASHTO M-157). All concrete shall be delivered to the work site thoroughly mixed to a uniform color and show uniform distribution of aggregates and cement throughout the mixture.

Concrete shall be delivered to the Project site, discharged from the truck completely and in the forms ready for vibration within one and one-half (1-1/2) hours after introduction of the cement to the aggregates. At the discretion of the Engineer, the above period may be extended one (1) minute for every degree of temperature at which the concrete is delivered below seventy degrees (70°) Fahrenheit to a maximum total time of two (2) hours.

In hot weather, or under conditions contributing to quick setting of the concrete, a discharge time less than one and one-half (1-1/2) hours may be required by the Engineer. Any concrete remaining undischarged at the end of the respective time period shall be rejected.

The use of non-agitating equipment for transporting concrete will not be permitted. The mixing drums of transit-mix trucks shall be thoroughly washed after discharging each load to prevent the accumulation of adherent layers of concrete. The discharge of particles of hardened concrete with any batch will be sufficient grounds for the rejection of the entire batch. On curb, gutter and sidewalk work, transit mix trucks shall be operated parallel to the forms while discharging.

The addition of water to the mix at the job site will not be permitted except with the approval of the Engineer. Any additional water that is added shall be documented and recorded on the delivery ticket by a representative of the supplier.

Article 1.5 Subbase

Prior to placement of forms, the Engineer shall inspect the subbase to insure that it is smooth, compacted and free of soft or yielding spots and that compaction at optimum moisture is at least ninety-five percent (95%) of maximum density (AASHTO T-180 D). Backfilling within the forms will be permitted if the subbase is brought to the above specification and care is taken to maintain the forms to line, shape elevation.

Article 1.6 Mix Requirements for Classes of Concrete

The minimum mix requirement for classes of concrete shall be as set forth below, unless otherwise specified in the Contract Documents.

	CLASS OF CONCRETE						
	C-6	B-3	B-6	A-3	A-6	AA-3	AA-6
Minimum Cement Content in Sacks/Cu. Yd.	4.5	5.0	5.0	5.5	5.5	6.0	6.0
Maximum Water Content Ratio in Gal./Sack	6.5	6.5	6.5	6.5	6.5	5.75	5.5
Slump Ranges in Inches	1-5	2-4	1-3.5	2-4	1-3.5	2-4	1-2
Entrained Air Range in Percentage	3-6	4-7	3-6	4-7	3-6	4-7	3-6
Coarse Aggregate (AASHTO Gradation)	No.4 and No. 67	No. 67	No. 4* and No. 67	No. 67	No. 4* and No. 67	No. 67	No. 4* and No. 67
Fine Aggregate Shall Conform to AASHTO M-6 Gradation							
Minimum Design Strength (fc), psi	2000	2500	2500	3000	3000	3500	3500

Minimum design compressive strength specification shall be achieved in twenty-eight (28) days.

*The coarse aggregate for Class B-6, A-6, and AA-6 concrete shall be furnished in two (2) separate sizes.

Alternate mix designs will be considered upon submitting to the Engineer the following information:

1. MOA mix design designation for which the substitution is intended.
2. Design strength.
3. Air content.
4. Slump.
5. Aggregate gradation and maximum size.
6. Maximum water/cement ratio.
7. Minimum cement content.
8. List of admixtures, strength overdesign, and other special features.
9. Fine aggregate weight/percent moisture of fine aggregate.
10. Intermediate aggregate weight/percent moisture of intermediate aggregate.

11. Coarse aggregate weight/percent moisture of coarse aggregate.
12. Weight of cement.
13. Weight of water.
14. Unit weight.

Water shall not be used to increase slump beyond four inches (4”). If additional slump is desired, a plasticizing agent may be used subject to the Engineer's written approval.

Article 1.7 Ready-Mixed Concrete

Ready-mixed concrete shall conform to the requirements of ASTM C-94 (AASHTO M-157). For each batch of concrete, it is the responsibility of the Contractor to furnish to the Engineer, before unloading at the site, a delivery ticket from the manufacturer on which is printed, stamped or written, information concerning said concrete as follows:

1. Name of ready-mix batch plant.
2. Serial number of ticket.
3. Date and truck number.
4. Name of Contractor.
5. Specific designation of Project (name and location).
6. Specific class of concrete in conformance with that employed in Specifications.
7. Amount of concrete (cubic yards).
8. Time loaded or first mixing of cement and aggregate.
9. Type of cement.
10. Admixtures and amount of same.
11. Slump requested by the Contractor and recorded in inches.
12. Percentage of entrained air requested by the Contractor.
13. Fine aggregate weight/percent moisture of fine aggregate.
14. Intermediate aggregate weight/percent moisture of intermediate aggregate.
15. Coarse aggregate weight/percent moisture of coarse aggregate.
16. Weight of cement.
17. Weight of water.
18. Unit weight.

Article 1.8 Sampling and Testing

The Engineer shall take concrete samples for concrete cylinders in accordance with AASHTO T-141. Samples shall not be taken at the beginning or end of discharge. Making and curing the specimens shall be done in accordance with AASHTO T-23. Testing and sampling shall be done by the Engineer.

Slump tests shall be taken in accordance with AASHTO T-119 or ASTM C-143. Slump tests shall be taken by the Engineer.

Should the analysis of any test cylinder not meet the requirements of these Specifications, all concrete placed from the batch represented by the cylinder shall be removed and replaced at the Contractor's expense.

Article 1.9 Weather Limitations

Placement of Portland Cement Concrete is subject to the following requirements:

1. Salt, chemicals, or other material shall not be mixed with the concrete to prevent freezing.
2. Placement of concrete shall be prohibited whenever there is standing water on the grade or in the forms, the subgrade is yielding due to saturation, or rain is threatening.
3. Approved admixture shall be used in accordance with the manufacturer's recommendations.

Placement of concrete shall be prohibited at an ambient air temperature of less than forty degrees (40°) Fahrenheit or where the foundation material is frozen, except in special situations where authorized by the Engineer in writing. Exemption from the temperature clause of these Specifications shall be considered only under the following conditions:

A written proposal shall be submitted by the Contractor to the Engineer outlining a procedure for maintaining the placed concrete temperature of at least fifty degrees (50°) Fahrenheit for seventy-two (72) hours where Type III cement has been used and one hundred and twenty (120) hours where Type I cement has been used. When the temperature is reduced, the drop in temperature must be gradual and not exceed thirty degrees (30°) Fahrenheit in the first twenty-four (24) hours.

Article 1.10 Protection of Work

The Contractor shall protect all newly placed concrete from damage of any kind to prevent disfigurement during the curing period. Damaged concrete shall be repaired or replaced to the Engineer's satisfaction at no additional cost.

Type I/II Portland Cement Concrete must have been placed and finished a minimum of seven (7) days prior to material being distributed against, or vibrated (compaction) adjacent to the structure.

Type III Portland Cement Concrete must have been placed and finished a minimum of three (3) days prior to material being distributed against, or vibrated (compaction) adjacent to the structure.

Article 1.11 Clean-up

When all concrete Work has been completed and cured, the Contractor shall remove the forms, stakes, blocking, and concrete spoil from the site. The area adjoining the concrete that was excavated to permit the construction and placement of forms shall be filled with select material, and the slopes and parking areas, if any, shall be filled, shaped and smoothed to the level as shown on the Drawings or Standard Details.

SECTION 30.02 PORTLAND CEMENT CONCRETE, CURB AND GUTTER AND VALLEY GUTTER

Article 2.1 Description

The Work covered under this Section consists of the construction of curbs, gutters, miscellaneous median shapes and parking stops.

Article 2.2 Materials

Portland Cement Concrete, joint filler, reinforcing steel and curing materials shall conform to Section 30.01, Article 1.3 - Materials. Concrete mix for curbs shall conform to the requirements for Class A-3 unless otherwise specified.

A. Reinforcing Steel and Steel Dowels

Refer to Section 30.01, Article 1.3, SubArticle A. - Reinforcing Steel and SubArticle B. - Welded Steel Wire Fabric.

B. Preformed Expansion and Dummy Joint Filler

Refer to Section 30.01, Article 1.3, SubArticle H. - Expansion Joints.

C. Curing Compounds

Refer to Section 30.01, Article 1.3, SubArticle G. – Curing Materials.

D. Forms

Forms may be of wood or metal or any other material at the option of the Contractor, provided that the forms as set will result in a curb, or curb and gutter of the specified thickness, cross section, grade and alignment shown on the Drawings.

Forms may be removed on the day following pour if the concrete is sufficiently set that removal can be accomplished without danger of chipping or spalling. Form materials shall be free from warp, with smooth and straight upper edges, and if used for the face of a curb, shall be surfaced on the side against which the concrete is to be placed. Wooden forms for straight work shall have a net thickness of at least one and one-half inches (1.5”). Metal forms for such a work shall be of a gage that will provide equivalent rigidity and strength. Curb face forms used on monolithic curb and gutter construction shall be a single plank width when the curb face is ten inches (10”) or less, except for those used in curb returns. All forms used in curb returns shall not be less than three-quarters inches (3/4”) in thickness, cut in the length and radius as shown on the Drawings, and held rigidly in place to line and grade by the use of metal stakes and clamps. The curb face form shall be cut to conform exactly with the curb face batter as well as being cut to the required length and radius. Forms shall be of sufficient rigidity and strength, and shall be

supported to adequately resist springing or deflection from placing and tamping of concrete.

Form material shall be clean and free from defect at the time of use.

All forms including back planks of curb shall be set with upper edges flush with specified alignment and grade of the finished surface of the improvements to be constructed, and all forms shall be not less than a depth equivalent to full specified thickness of the concrete to be placed.

Forms shall be held securely in place by means of metal stakes driven in pairs at intervals not to exceed three feet (3'), one at the front form and one at the back form. Clamps, spreaders, and braces shall be used to the extent as may be necessary to insure proper form rigidity. Forms for walk and similar work shall be firmly secured by means of stakes driven at intervals not to exceed four feet (4'). Form stakes shall be of sufficient size and be driven so as to adequately resist lateral displacement.

Commercial form clamps for curb and gutter may be used provided they fulfill the requirements specified herein.

Pump trucks may be used upon approval of the Engineer. Prior to approval, the Contractor must demonstrate to the satisfaction of the engineer that the pumping equipment will not segregate, or in any other way degrade, the concrete. Additional test samples for such alternate placement methods may be taken from the discharge side of the machine for compressive strength determination assurance tests.

Article 2.3 Construction

A. Erecting Forms

All forms shall be set to the lines, grade, and dimensions shown on the Drawings. The forms shall be thoroughly braced and secured to resist deformation or displacement under load, and shall be installed to permit easy removal without hammering or prying against the fresh concrete. The top of the forms shall not deviate more than one-eighth inch (1/8") in ten feet (10'), and the alignment of forms shall be within one-fourth inch (1/4") in ten feet (10').

Before placement of concrete, steel forms shall be lightly oiled with a good grade of form oil. Excess oil shall be removed by wiping with clean rags, dampened in diesel or fuel oil. Wooden forms may be oiled in the same manner as metal forms, or they may be watered immediately in advance of the placement of concrete. Watering of the form shall be done with clean water of the same quality as that specified for mixing water, and only when the atmospheric temperature is not less than forty degrees (40°) Fahrenheit. Concrete shall not be placed until all forms have been inspected and approved by the Engineer. Wherever form work is exposed to pedestrian traffic, bridges (not attached to the forms) shall be provided

at all regular pedestrian crossings where it is required to maintain safety standards. Barricades and other safety features shall be installed as necessary.

B. Placing Concrete

Prior to the delivery of the first load of concrete for curbs, the Contractor shall furnish rigid straightedges, ten feet (10') or sixteen feet (16') in length, to the Engineer for checking surface uniformity. String shall not be used as a straightedge. Surface irregularities, as measured along the top face of curb and the curb pan, shall not exceed three-sixteenth inch (3/16") within ten feet (10'), or five-sixteenth inch (5/16") within sixteen feet (16'). Non-conforming surfaces shall be subject to rejection by the Engineer. All surfaces rejected by the Engineer shall be corrected by the Contractor at the Contractor's expense.

The subgrade shall be properly compacted and brought to specified grade in accordance with the Drawings before placing concrete. The subgrade shall be thoroughly dampened immediately prior to the placement of the concrete. Forms shall not be splashed with concrete in advance of placing.

Concrete shall be discharged from transport vehicle to the point of final placement in a continuous manner as rapidly as practicable. The rate of placement shall not exceed the rate at which the various placing and finishing operations can be performed in accordance with these Specifications. Concrete shall not be allowed to free fall more than three feet (3').

If concrete is to be placed by the extruded method, the Contractor shall demonstrate to the satisfaction of the Engineer that the machine is capable of placing a dense, uniformly compacted concrete to exact section, line and grade. Extruded curb which does not meet all requirements of the Contract Documents, shall be replaced at the Contractor's expense.

C. Stripping Forms and Finishing

The face form of the curb shall be stripped at such time in the early curing as will enable inspection and correction of all irregularities that appear thereon.

Forms shall not be removed until the concrete has set sufficiently to retain its true shape. The face of the curb shall be troweled with a tool cut to the exact section of the curb and at the same time maintain the shape, grade, and alignment of the curb. Both front and back edges shall be troweled to a radius of one-half inch (1/2"). Final finish shall be obtained by brooming the surface, including the troweled edge to a gritty finish after all free moisture has disappeared from the surface. Sprinkling of cement or sand for blotting will not be permitted.

It is the intent of this Specification to insure the highest quality of workmanship in the construction and finishing of P.C.C. curb and gutter.

Unsightly or poorly finished surfaces will be considered grounds for rejection of the Work. The top and/or face and gutter of the finished concrete surfaces shall be true and straight, of uniform width and free of cracks, humps, sags, or other irregularities. The finished concrete surface shall not vary more than two-hundredths of a foot (0.02') from a ten foot (10') straight edge, except at grade changes or curves. No freestanding water is permitted on slopes at or greater than one percent (1%). No freestanding water deeper than one-sixteenth inch (1/16") is permitted on slopes of less than one percent (1%). The Contractor shall flow test all new concrete curb and gutter. Curb and gutter failing to meet this requirement will be rejected.

All defective areas shall be removed and replaced at the Contractor's expense, unless permission to patch is granted by the Engineer. Such permission shall not be construed as an acceptance of the Work or as a waiver of the Engineer's right to require the complete removal of the Work, if in his opinion the patch does not satisfactorily restore the quality or appearance of the surface.

Should patching be permitted, the area shall be chipped clean to a depth of one inch (1") perpendicular to the surface and saturated with clean water prior to being patched. The patch shall be made with a mortar extracted from fresh concrete by passing it through a three-eighths inch (3/8") screen. The mortar shall be thoroughly compacted and screeded off slightly higher than the surrounding surface to allow for contracting or setting after the maximum shrinkage has taken place. After one (1) to two (2) hours, the patch shall be troweled to the same finish as the surrounding area and shall be cured as specified herein. The use of special patching material will be permitted if approved by the Engineer.

D. Curing

Curing compounds shall be applied to all exposed surfaces immediately after finishing. Transparent curing compounds shall contain a color dye of sufficient strength to render the film distinctly visible on the concrete for a minimum period of four (4) hours after application.

If, at any time during the curing period any of the forms are removed, a coat of curing compound shall be applied immediately to the exposed surface. The curing compound shall be applied in sufficient quantity to obscure the natural color of the concrete. Additional coats shall be applied if the Engineer determines that the coverage is not adequate. The concrete shall be cured for the minimum period of time set forth below.

Curb and gutter constructed of Type I/II Portland Cement Concrete must have been placed and finished a minimum of seven (7) days prior to material being distributed against, or vibrated (compaction) adjacent to the structure.

Curb and gutter constructed of Type III Portland Cement Concrete must have been placed and finished a minimum of three (3) days prior to any material being distributed against, or vibrated (compaction) adjacent to the structure.

When forms are removed before the expiration of the curing period, the edges of the concrete shall be protected with moist earth, or sprayed with curing compound.

Other standard methods of curing the curb and gutter may be used upon approval of the Engineer. Concrete shall not be placed unless curing compounds and necessary equipment for applying such is on the Project site.

E. Expansion and Contraction Joints

1. Expansion Joints

Expansion joints shall be placed along all structures, as shown in the Drawings and/or Standard Details, and around all features that project into, through, or against the concrete. An expansion joint shall be constructed at the intersection of sidewalks; between sidewalk crossings and sidewalks; between curbs and sidewalks (except parallel curb); and at the beginning and end of curb returns. Additionally expansion joints shall be constructed every fifty feet (50') where the sidewalk span exceeds seventy-five feet (75') and expansion joints are not required for the above listed reasons. Expansion joint material shall conform to the requirements of ASTM D-1751 (AASHTO M-213). Expansion joints shall not exceed one half inch plus or minus one-eighth inch (1/2" ± 1/8") in width. Expansion joint material shall extend the full width of the structure and shall be cut to such dimensions that the base of the expansion joint shall extend to the subgrade and the top shall be depressed not less than one-quarter inch (1/4") nor more than one-half inch (1/2") below the finished surface of the concrete. The material shall be of one (1) piece in the vertical dimension and shall be securely fastened in a vertical position to the existing concrete face against which fresh concrete is to be placed. After the concrete has set, the expansion joints shall be filled flush to the finish concrete surface with an approved polyurethane sealant applied according to the manufacturer's recommendation.

Before sealing, the joint shall be cleaned of all dirt, gravel, concrete mortar, and other extraneous material. Sealing shall be done in a neat workmanlike manner.

2. Contraction Joints

Transverse contraction joints, cut to a depth of one inch (1") prior to the final set of the concrete, shall be tooled in the sidewalks at intervals of five feet (5'), and at ten feet (10') intervals in the curb and gutter. Where the sidewalk adjoins the curb (parallel to it), contraction joints in the sidewalk and curb shall be made to match where practicable.

Article 2.4 Measurement

Curb or integral curb and gutter shall be measured per linear foot along the face of the curb. Mountable (rolled) curb and gutter shall be measured per linear foot along the gutter line. Portland Cement Concrete (P.C.C.) Valley Gutter shall be measured as shown on the Standard Detail.

Curb containing steel curb facing shall be measured per linear foot along the face of the curb and the designation "Steel Curb Facing" shall be included in the "Type" description of the pay item.

Medians with curb noses shall be measured as follows: P.C.C. curb and gutter per linear foot, curb noses including yellow paint, as units complete in place.

Parking stops shall be measured as units complete in place.

Article 2.5 Basis of Payment

Payment for this Work shall be in accordance with Division 10, Section 10.07 - Measurement and Payment and shall include full payment for all Work described in this Section.

Payment shall be made under the following units unless otherwise specified:

ITEM	UNIT
P.C.C. Curb and Gutter (Type)	Linear Foot
P.C.C. Valley Gutter	Linear Foot
Curb Nose	Each
Parking Stop	Each

Extra payment will not be made for depressed curb or special sections.

SECTION 30.03 PORTLAND CEMENT CONCRETE SIDEWALKS

Article 3.1 Description

The Work covered under this Section consists of all Work necessary for the provision of Portland Cement Concrete sidewalks.

Article 3.2 Materials

The Portland Cement Concrete, joint filler, reinforcing steel, and curing materials shall conform to Section 30.01, Article 1.3 - Materials. Concrete mix for sidewalks shall conform to the requirements for Class A-3.

Article 3.3 Construction

A. Excavation and Embankment

Excavation and embankment for sidewalks shall be as described in Division 20 - Earthwork. Where directed by the Engineer, unsuitable material in the subgrade shall be removed to a specific depth and then backfilled with classified fill. Payment will not be allowed for excavation below grade or for backfill materials required when such excavation is caused by negligence of the Contractor.

Embankment shall be compacted to ninety-five percent (95%) maximum density in accordance with Division 20, Section 20.01, Article 1.5 - Compaction Standards. In areas that are inaccessible to normal compaction equipment, approved tampers shall be used.

Before the forms are set, the subgrade shall be graded to within one inch (1”) of established grade and the area between the sidewalk and the adjacent private property line shall be shaped to line, grade, and section shown on the Drawings.

B. Forms and Fine Grading

Forms shall conform to requirements outlined in Section 30.02 - Portland Cement Concrete, Curb and Gutter, and Valley Gutter. Wood forms against unexposed concrete surfaces shall be No. 2 Common Lumber or better. Those against surfaces to be exposed shall be dressed and matched boards of uniform thickness, and widths not exceeding ten inches (10”). Rigid, nonporous and waterproof sheet material may be used provided the end result will be a smooth unmarked concrete surface without waves, fins or other noticeable markings.

Plywood conforming to the requirements for form work, as set forth by the American Plywood Association, may be used against both exposed and unexposed concrete surfaces. This plywood shall be not less than five (5) ply and at least nine-sixteenths inch (9/16”) thick. Low areas in the subgrade shall be backfilled with classified fill or with suitable native material as directed by the Engineer. The backfill shall then be compacted to ninety-five percent (95%) maximum density and

any dry areas in the subgrade shall be thoroughly dampened prior to the time the concrete is placed. No payment will be made for water, and the work of placing and cost thereof shall be considered as incidental to the construction of the concrete sidewalk.

C. Placing and Finishing Portland Cement Concrete Sidewalk

The concrete shall be spread uniformly between the forms and thoroughly compacted with a steel shod strikeboard. After the concrete has been thoroughly compacted and leveled, it shall be floated with wood floats and finished at the proper time with a steel float. Joints shall be edged with a one-quarter inch (1/4") radius edger and the sidewalk edges shall be tooled with a one-half inch (1/2") radius edger. After final troweling, sidewalk on grades of less than six percent (6%) shall be given a fine hair broom finish applied transversely to the centerline. On grades exceeding six percent (6%), walk shall be finished by hand with a wood float. Walk shall be re-marked as necessary after final finish to assure neat uniform edges, joints, and score lines. Unsightly, poorly finished, and sidewalk failing to meet the requirements of the Drawings, Specifications, and this Section will be rejected.

The sidewalk shall be divided into panels by scoring one inch (1") deep every five feet (5'). Refer to Section 30.02, Article 2.3, SubArticle E - Expansion and Contraction Joints for requirements for contraction and expansion joints. The expansion joints shall be placed at all structures such as catch basins and manholes, at driveways, and at all points of tangency and points of curvature.

Additional requirements for placing and finishing concrete in cold weather shall be as outlined in Section 30.01, Article 1.9 - Weather Limitations.

For all other exposed aggregate concrete sidewalks, Contractor shall float and trowel all surfaces to receive the exposed aggregate finish. Seeding the surface with aggregate shall not be allowed. After the concrete has taken its initial set, the surface aggregate shall be exposed using a water fog spray and brooms to remove the surface matrix. The coarse surface aggregate shall be exposed very lightly, approximately one-sixteenth inch (1/16"). After the concrete has taken its final set, a weak acid wash shall be applied to clean and wash the exposed aggregate surfaces. The weak acid wash shall be thoroughly neutralized and flushed from the finished surface. Under no circumstances shall Contractor allow the acid wash to enter the storm drain lines.

Contractor shall protect adjacent construction, plantings, finishings, structures, and the public from damage and harm due to the acid wash. The finished appearance of the exposed aggregate concrete sidewalk shall produce an appearance and texture that matches the adjacent exposed aggregate sidewalk. Any significant difference in texture or appearance between two adjacent concrete panels, as determined by the Engineer, shall result in removal and replacement of concrete panels by Contractor at no additional cost.

Contractor shall provide a two foot by two foot (2' x 2') exposed aggregate concrete test panel prior to constructing the exposed aggregate concrete sidewalk. Location of the test panel will be on-site as approved by the Engineer. Notification of providing this test panel shall be made to the Engineer no less than 24 hours prior to making the test panels to allow the Engineer and materials analysis personnel to be present. The Engineer may require the Contractor to provide additional panel(s) if the test panel does not produce an appearance that matches the adjacent exposed aggregate sidewalk.

Providing the test panel and any other required test panel shall be considered incidental to the bid item "P.C.C. Sidewalk 4" Thick (Exposed Aggregate)" and no separate payment shall be made.

D. Curing and Protection

The materials and procedures outlined in Section 30.02, Article 2.3 - Construction, shall prevail. The curing agent shall be applied immediately after finishing and be maintained for a period of seven (7) days. The curing agent(s) and/or concrete mixtures shall in no way deter or prevent final finishing of concrete. The use of surface retarders may be permitted if application methods are accepted by the Engineer, in writing, no less than twenty-four (24) hours prior to concrete placement.

The Contractor shall have readily available sufficient protective covering, such as waterproof paper or plastic membrane, to cover the pour of an entire day in event of rain or other unsuitable weather.

The sidewalk shall be protected against damage or defacement of any kind until it has been accepted by the Owner. Sidewalk which is not acceptable to the Engineer because of damage or defacement shall be removed and replaced at the expense of the Contractor.

Additional requirements for curing in cold weather shall be as outlined in Section 30.01, Article 1.9 - Weather Limitations.

Article 3.4 Measurement

Sidewalk: Sidewalks shall be measured per square yard, complete in place, for both four (4") and six inch (6") thicknesses.

Sidewalk Retaining Walls: Sidewalks of specified thickness constructed in conjunction with sidewalk retaining walls constructed in accordance with Section 30.05 – Structures and Retaining Walls, shall be measured per square yard from the face of retaining wall, accepted in place.

Article 3.5 Basis of Payment

Payment for this item shall be in accordance with Division 10, Section 10.07 - Measurement and Payment and shall include full payment for all Work described in this Section.

Payment shall be made under the following units:

ITEM	UNIT
P.C.C. Sidewalk (Thick) (Type Finish)	Square Yard

SECTION 30.04 PORTLAND CEMENT CONCRETE CURB RAMPS

Article 4.1 General

The Work under this Section consists of performing all operations pertaining to furnishing and constructing Portland Cement Concrete curb ramps with a detectable warning surfacing in conformance with the Drawings. The ramps shall comply with the Americans with Disabilities Act Title II as identified in 28 CFR Part 35 – Nondiscrimination on the Basis of Disability in State and Local Government Services.

Article 4.2 Materials

A. General

The Portland Cement Concrete (P.C.C.) materials and installation shall conform to the requirements of Section 30.03 - Portland Cement Concrete Sidewalk and the Drawings. The P.C.C. shall have a slump range of four to seven inches (4" to 7") to permit solid placement of the tactile warning panel. An overly wet mix will cause the tactile warning panel(s) to float. Contractor shall not add color to the concrete unless specified in the Drawings.

The Contractor shall not apply a troweled pattern to the curb ramps. Contractor shall provide a coarse broom finish for the ramps perpendicular to direction of pedestrian traffic.

B. Detectable Warning Panel

Each detectable warning panel shall have a truncated domed surface twenty-four inches (24") in depth for the width of the ramp. The truncated domes shall have a height of two-tenths inch (0.2"), a diameter of nine-tenths inch (0.9"), a center-to-center spacing of one and six-tenth inches (1.6") minimum and two and four-tenth inches (2.4") maximum, and a base-to-base spacing of sixty-five one-hundredth inch (0.65"), measured between the most adjacent domes.

Contractor shall provide panels federal yellow in color, or approved equal. The specified color shall be homogeneous throughout the panel.

Contractor shall provide Armor Tile Cast-In-Place In-Line Dome Tactile Panel detectable warning panel(s), manufactured by:

Engineered Plastics, Inc.
300 International Drive, Suite 100
Williamsville, NY 14221
Phone: 1-800-682-2525

Local Contact:
Polar Supply Company, Inc.
300 E. 54th Avenue
Anchorage, Alaska 99518-1230
Phone: 907-563-5000
Fax: 907-562-7001

or a gray cast iron detectable warning plates, or panels (s), manufactured by:

Neenah Foundry Company, Inc.
4107 E. Madison Street
Phoenix, AZ 85034
Phone: 1-866-765-0850

OR

East Jordan Iron Works, Inc.
301 Spring Street
East Jordon, MI 49727
Phone: 1-800-626-4653

Local Contacts:
Ferguson Enterprises, Inc.
151 East 95th Avenue
Anchorage, Alaska 99515
Phone: 907-273-2100
Fax: 907-273-2110

OR

Hughes Supply, Inc.
440 West 40th Avenue
Anchorage, Alaska 99503
Phone: 907-563-3315
Fax: 907-562-2175

or an approved equal.

Article 4.3 Construction

The Contractor shall construct each curb ramp and install the detectable warning panel(s) in conformance with the Contract Documents and the manufacturer's recommendations.

No later than five (5) days prior to construction of the curb ramps, Contractor shall submit to the Engineer for review and approval, a layout drawing for each curb ramp to resolve issues related to pattern repeat, tile cuts, expansion joints, control joints, ramp curves, ramp end returns and surface interfaces, and truncated dome spacing.

Contractor shall install and finish the P.C.C. in accordance with the Contract Documents prior to installation of the detectable warning panel(s). Contractor shall tamp the plate(s) or panel(s) with a small sledge hammer with a two inch by six inch by twenty inch (2" x 6" x 20") wood tamping plate, or lightly vibrate into the fresh concrete to ensure that the panel's field level (base of truncated dome) is flush with the adjacent concrete and top back of curb. Contractor shall ensure that the panel's field level is flush with the adjacent concrete surface, proper water drainage is provided, and potential tripping hazards are eliminated. Contractor shall ensure that the back edge of the detectable warning panel(s) form a smooth arc and is parallel to the top back of the curb.

Immediately after the panel placement, Contractor shall check and adjust accordingly the panel's or plate(s) field level to be flush with the adjacent concrete surface. Following final field-level adjustment(s), place suitable twenty-five (25) pound weights, conforming to the manufacturer's recommendations, on each panel and additional weights at panel-to-panel joints as necessary to provide a solid contact between the panel underside and the concrete.

During and after the panel installation and concrete curing time, Contractor shall ensure that there is no walking, leaning, or any external forces placed on the panel, thereby causing a void between the underside of the panel and the concrete.

After the concrete has cured, Contractor shall remove protective plastic wraps. If "concrete bleeding" occurs between the panels, Contractor shall remove the residue without damage to the panel surfaces, in accordance with the manufacturer's recommendation.

Contractor shall maintain, on-site, an electronic level, a five foot (5') diameter circle template, and a three foot by five foot (3'x5') rectangular template. Template may be of any material, including paper. Contractor shall, when requested, demonstrate to the Engineer that there are adequate landing and turning areas that meet the dimensions and slopes required on the Drawings.

Backfill and grade areas disturbed by curb ramp construction and restore ground surface as shown on Drawings.

Article 4.4 Tolerances

In accordance with the Americans with Disabilities Act Public Rights-of-Way Accessibility Guidelines (PROWAG), dimension not stated as "maximum" or "minimum" are absolute. All dimensions are subject to conventional industry tolerances, except where the requirement is stated as a range with specific minimum and maximum end points.

Conventional industry tolerances recognized by the ADAAG include those for field conditions that may be a necessary consequence of a particular manufacturing process. Information on specific tolerances may be available from industry or trade organizations, code groups, building officials, and published references. (Example: American Concrete Institute Standard Specifications for tolerances for concrete construction and materials (ACI-117)).

Article 4.5 Measurement

The Work paid for under "P.C.C. Curb Ramp" shall be measured as furnished, constructed, finished, and accepted in place for each installation or the actual horizontal square yardage of curb ramp (including curb ramp under detectable warnings) and back curb.

The Work paid for under "Detectable Warnings" is measured by the actual horizontal square footage of detectable warning tiles furnished, installed, and accepted in place.

When P.C.C. Curb Ramp is paid per each, the Detectable Warnings are incidental to each installation and no separate payment shall be made.

Article 4.6 Basis of Payment

Payment for this Work shall be in accordance with Division 10, Section 10.07 - Measurement and Payment, and shall include full payment for all Work described in this Section.

Payment for restoration of existing ground surface disturbed by curb ramp construction is made under “A.C. Pavement,” “P.C.C. Sidewalk,” “Topsoil,” and “Seeding,” as applicable. No separate payment is made for backfilling and grading in preparation of paid surface treatment. No separate payment is made for backfilling and grading in locations where the existing surface is gravel.

Payment shall be made under the following unit:

ITEM	UNIT
P.C.C. Curb Ramp (Type)	Each
P.C.C. Curb Ramp (Type)	Square Yard
Detectable Warnings	Square Foot

SECTION 30.05 STRUCTURES AND RETAINING WALLS

Article 5.1 Description

The Work under this Section consists of the construction of Portland Cement Concrete structures and retaining walls.

Article 5.2 Construction

A. Reinforcing Steel

Reinforcing bars shall be bent cold and shall conform accurately to the shape and dimensions shown on the diagram. Bent-up bars, unless otherwise specified, shall be bent up at an angle of forty-five degrees (45°). In no case shall the radius of any bend be less than four (4) times the diameter of the bar.

The reinforcement shall be positioned as indicated on the Drawings or as hereinafter specified. It shall be rigidly blocked and wired in place, using metal supports or concrete blocks and securely tied at each intersection with annealed iron wire of at least twelve (12) gauge.

Splicing bars at points not indicated on the Drawings will not be permitted except as an emergency measure and with the consent of the Engineer. Such splices shall be at the points of minimum tensile stress and the lap shall be not less than thirty-six (36) bar diameters.

Bar lists and Bending schedules shall be furnished by the Contractor for approval of the Engineer. Materials shall not be ordered until such lists and bending diagrams have been approved by the Engineer. The approval of order lists and bending diagrams will in no way relieve the Contractor of responsibility for the correctness of such lists and diagrams. Any expense incidental to the revision of material furnished in accordance with such lists and diagrams, to make it comply with the design drawings, shall be borne by the Contractor.

B. Forms

Forms shall conform to the shape and dimensions shown on the Drawings and shall be accurately set to line and grade. All sheeting in contact with concrete surfaces shall be matched tongue and groove lumber, sized to uniform thickness and free from wane, warp, splits, loose knots or other defects which will prevent obtaining a smooth, tight form. Forms for exposed surfaces shall be lined with plywood conforming to the requirements for form plywood as specified by the American Plywood Association. All plywood lining shall be used in as wide pieces as possible. Areas less than four feet (4') in width shall be lined with a single width of plywood. Joints in lining and backing shall not occur at the same place and the abutting edges of adjacent sheet shall be nailed to the same board.

Joints in the lining shall be filled with cold water putty, patching plaster, plastic wood, or other plastic filler satisfactory to the Engineer. Lining material may be re-used if it is in satisfactory condition, well cleaned, re-oiled, and if specific permission from the Engineer is obtained for each separate operation.

All forms shall be securely tied with bolts or rods in such manner that after stripping, such bolts or rods may be either entirely removed or may be removed for a distance at least one inch (1") below the concrete surface. Such bolts or rods shall be threaded and provided with nuts to prevent slipping and to provide adjustments. No wire ties or clamping devices shall be permitted.

Forms for walls, etc., shall have large cleanout openings at their lowest points, which shall not be closed until just before placing concrete. All forms shall be thoroughly cleaned and soaked with water immediately before filling.

Weep drains shall be provided by the Contractor and installed as shown on the Drawings.

C. Placing

Concrete shall be placed by means of a bottom dumping bucket, cart, concrete chute, or tremie. At no time shall concrete have a free fall or more than three feet (3'). The concrete shall be brought up in approximately horizontal layers. The concrete shall be placed continuously from one side or end of the section to the other, using precaution to put the full load upon any given area of form as rapidly as possible. The rate of delivery of concrete to the work shall be such as to insure continuity of placement. No partially completed surface shall be allowed to stand more than forty-five (45) minutes before continuing the placing of concrete thereon.

D. Compacting Concrete

All concrete shall be thoroughly spaded, especially along the forms, to prevent the formation of gravel pockets and to permit the escape of trapped air. In addition to spading, the Contractor shall also provide suitable internal vibrating tampers of the type designed to be placed directly in the concrete. Vibration shall be such that the concrete becomes uniformly plastic. Vibrators shall be inserted to a depth sufficient to vibrate the bottom of each layer effectively, but shall not be allowed to penetrate partially hardened concrete which will not become plastic under the vibrator action, nor shall the vibrator be applied directly to steel which extends into partially hardened concrete. Placing of concrete shall not commence until the vibrator is on the job site and the mechanical efficiency of the vibrator is proven in the presence of the Engineer.

E. Finishing Concrete

All irregularities on exposed surfaces such as gravel pockets, bolt holes, etc., shall be neatly painted with mortar of the same proportions as used in the concrete. The

surface film of all such patches shall be rubbed off after initial setting has taken place.

All exposed surfaces shall, after irregularities have been corrected, be thoroughly wetted and brushed with a grout composed of one (1) part fine sand and one (1) part cement. It shall then be kept wet for forty-eight (48) hours.

All outside edges are to have three-quarter inch (3/4") chamfered corners, unless noted otherwise. They shall be obtained by putting a triangular strip of wood in the corners of the forms.

F. Joints, Horizontal and Vertical

Joints shall be made in walls or structures as indicated on the Drawings or where directed by the Engineer. If not indicated on the Drawings, the maximum distance between contraction joints shall be twenty-five feet (25'), and the maximum distance between expansion joints shall be fifty feet (50'). Where expansion joints are required, one-half inch (1/2") precast expansion joint material conforming to the requirements of ASTM D-1751 (AASHTO M-213) shall be used. The walls shall be poured one section at a time. The joint material shall be accurately cut to fit the bulkhead between sections, and nailed to the bulkhead with 6d nails. These nails shall be driven into the lumber only enough to hold the material in place, the heads being embedded in the concrete. The bulkheads between sections shall be removed not sooner than twelve (12) hours after the concrete has been placed and the nail points clinched into the joint material.

At the surface of the wall, unless otherwise shown, the joint shall end in a V-shaped grove, two inches (2") wide and one inch (1") deep. Unless noted otherwise, all joints will be truly horizontal or truly vertical.

G. Removal of Forms

Unless otherwise directed by the Engineer, forms may be removed from structures and retaining walls, which are not subject to supporting loads, after a period of three (3) days. All other forms shall be removed upon approval of the Engineer.

H. Curing

All exposed surfaces shall be covered by layers of absorptive burlap, mats or other approved material to a thickness weighing not less than fourteen (14) ounces per square yard, immediately after finishing. The cover material shall be kept saturated with clean water for a minimum initial curing period of twenty-four (24) hours.

Following this initial curing, the concrete shall be completely covered with a plastic waterproof membrane, or equal, for an additional six (6) days. Liquid spray type waterproof membrane will not be considered a satisfactory material for curing concrete used for retaining walls or structures.

I. Waterproofing

Unless otherwise specified, the back side of retaining walls and backfilled surfaces of other structures shall be painted with two (2) coats of a cold bituminous waterproof coating which shall be approved by the Engineer prior to application. Application shall be with a stiff masonry type brush, or as recommended by the manufacturer.

J. Earthwork

All earthwork involved in the construction of retaining walls shall be constructed as specified in Division 20 - Earthwork.

Excavation for retaining walls and structures shall be to the limits shown on the Drawings. Where limits are not indicated, excavation shall be sufficient to properly construct the work.

Where directed by the Engineer, unsuitable material in the subgrade shall be removed to a specific depth and then backfilled with classified fill.

The subbase under footings shall be compacted to ninety-five percent (95%) density at optimum moisture content in accordance with Section 30.01, Article 1.5 - Subbase.

Backfilling the lower portion of structures and retaining walls shall not begin until fourteen (14) days after concrete placement. Where High-Early Strength Cement is used, backfilling the lower portion of structures and retaining wall shall not begin until four (4) days after concrete placement. Waterproofing shall not be left exposed for longer than twelve (12) days before backfill. Where drain holes or drain tile are involved, or where the Engineer may direct, a filter fabric shall be used in conjunction with a six inch (6") layer of coarse gravel which shall be spread and compacted around the drains in such a manner that earth will not clog the voids in the gravel. The remainder of the backfill shall be classified fill placed in layers not exceeding one foot (1') in thickness. Each layer shall be thoroughly rammed with a rammer not more than ten inches (10") in diameter and weighing not less than forty (40) pounds, or with an approved mechanical tamper. Unsuitable earth or vegetable matter shall not be used as backfill. Filling with loose earth and hydraulic jetting will not be allowed except by written permission of the Engineer. Imported material for backfill shall conform to Division 20, Section 20.21 - Classified Fill and Backfill.

K. Concrete walls shall include an anti-graffiti coating. Anti-graffiti coating shall be Sherwin Williams Protective & Marine Coatings, Series B97-150, or accepted equal. Anti-graffiti coating shall be applied per manufacturer's recommendations.

Article 5.3 Measurement

Concrete shall be measured per cubic yard for structures and retaining walls. Measurement will be determined from the neat line dimension. In the case of minor field changes such a changing the length, height, etc., payment shall be based on the same unit price per cubic yard as bid. Measurement shall be determined by the Engineer and Contractor prior to placing concrete. Where sidewalks are constructed in conjunction with retaining walls, the sidewalk shall be measured under the provisions of Section 30.03 – Portland Cement Concrete Sidewalks.

Graffiti protection is incidental to the construction of the structures and retaining walls and no separate payment shall be made.

Article 5.4 Basis of Payment

Payment for this Work shall be in accordance with Division 10, Section 10.07 - Measurement and Payment, and shall include full payment for all Work described in this Section. Extra payment will not be made to the Contractor if he places additional concrete over and above the neat line volume to facilitate his operation and save on form work.

No additional payment shall be made for excavation and backfill around retaining walls and structures. Payment for disposal of unusable excavation shall be in accordance with Division 20, Section 20.10 – Excavation for Traffic Ways. Payment for classified fill shall be made in accordance with Division 20, Section 20.21 – Classified Fill and Backfill.

Payment shall be made under the following unit:

ITEM	UNIT
P.C.C. Structure/Retaining Wall (Class)	Cubic Yard

SECTION 30.06 CONCRETE MASONRY RETAINING WALLS

Article 6.1 Description

The Work covered under this Section consists of the construction of concrete masonry walls on a reinforced, poured Portland concrete footing. This Work includes all excavation, classified fill or backfill, and mechanical compaction.

Article 6.2 Construction

A. Reinforcing Steel

Reinforcing steel shall conform to Section 30.05, Article 5.2 - Construction.

B. Survey

The Contractor shall set control stakes for the footings. The stakes will be set at breaks in grade and on even grade intervals not to exceed fifty feet (50'). They will be marked with the station offset, and the cut or fill to the top of the footing.

C. Forms

Forms may be of wood, metal, or any other material at the option of the Contractor, provided that the forms as set will result in a footing in accordance with thickness, cross section, grade, and alignment as required by the Contract Documents.

Forms may be removed after a period of three (3) days, unless otherwise directed by the Engineer.

D. Excavation and Embankment

Excavation and embankment for Masonry Retaining Walls shall be as described in Section 30.05, Article 5.2, SubArticle J - Earthwork.

E. Constructing Masonry Wall

The Contractor shall omit the head joint in the first course every thirty-two inches (32") O.C. to provide for weep holes.

All cells of the concrete masonry retaining wall shall be filled solid with grout. The grout shall develop a maximum compressive strength of 2,000 P.S.I. in 28 days. The grout mix shall be of a fluid consistency and mixed in the ratio by volume of one (1) part Portland cement, three (3) parts concrete sand, and two (2) parts No. 8 Coarse Aggregate. The concrete sand is to conform to the gradation requirements of AASHTO M-6. The coarse aggregate is to comply with gradation requirements as follows:

Coarse Aggregate Gradation Requirements

Sieve Size	Percent Passing by Weight
1/2"	100
3/8”	85-100
#4	10-30
#8	0-10
#16	0-5

Mortar shall be freshly prepared and uniformly mixed in the ratio by volume of one (1) part cement, one-half (1/2) part lime putty, and four and one-half (4-1/2) parts sand and shall conform to requirements of ASTM C-270.

The use of admixtures shall not be permitted in mortar or grout unless substantiating data is submitted and approved by the Engineer.

Masonry units shall be Grade A Units, conforming to the requirements of ASTM C-90. These units shall be sound, dry, clean, and free from cracks when placed in the structure. Where masonry unit cutting is necessary, all cuts shall be neat and true.

Portland Cement Concrete used in footings, shall conform to Section 30.01, Article 1.3 - Materials.

The starting joint on the footing shall be laid with full mortar coverage on the bed joint. All mortar joints shall be straight, clean and uniform in thickness and shall be tooled.

Tooling shall be done with a round bar to produce a dense, slightly concave surface well bonded to the block at the edges. Tooling shall be done when the mortar is partially set but still sufficiently plastic to bond. All tooling shall be done with a tool which compacts the mortar, pressing the excess mortar out of the joint rather than dragging it out. Joints which are not tight at the time of tooling shall be raked out, pointed, and then tooled.

If it is necessary to move a unit after it has been set in place, the unit shall be removed from the wall, cleaned and set in fresh mortar.

All capping units shall be set in a full bed of mortar.

F. Curing and Waterproofing

Curing and waterproofing of concrete masonry retaining walls shall conform to the specifications for structures and retaining walls in Section 30.05, Article 5.2, SubArticles H - Curing, and I - Waterproofing.

Article 6.3 Measurement

The item concrete masonry retaining walls shall be on a lump sum basis, complete in place and no measurement of quantities shall be made.

Article 6.4 Basis of Payment

Payment for this Work shall be in accordance with Division 10, Section 10.07 - Measurement and Payment, and shall include full payment for all Work described in this Section.

Payment shall be made under the following unit:

ITEM	UNIT
Concrete Masonry Retaining Walls	Lump Sum

SECTION 30.07 CONCRETE – BUILDING STRUCTURES

Article 7.1 Description

The Work covered in this Section consists of providing all operations pertaining to the mixing and placement of Portland Cement Concrete.

Article 7.2 Materials

A. Portland Cement Concrete, reinforcing steel, curing materials, and miscellaneous concrete Work shall conform to the following paragraphs of Section 30.01, Article 1.3 - Materials:

1. Reinforcing Steel and Steel Dowels

   See Section 30.01, Article 1.3, SubArticles A – Reinforcing Steel and B – Welded Steel Wire Fabric.

2. Preformed Expansion and Dummy Joint Filler

   See Section 30.01, Article 1.3, SubArticle H – Expansion Joints.

3. Curing Compounds

   See Section 30.01, Article 1.3, SubArticle G – Curing Materials.

B. Forms

Forms may be of wood or metal or any other material at the option of the Contractor, provided that the forms as set will result in configurations, dimensions, and proper finish in accordance with the Drawings.

Forms may be removed on the day following pour if the concrete is sufficiently set so that removal can be accomplished without danger of chipping or spalling. All forms shall be cleaned, oiled, and be examined for defects before they are used again.

Article 7.3 Formwork Construction

A. Inspection

Verify lines, levels, and measurements before proceeding with formwork.

B. Preparation

Earthforms - Hand-trim sides and bottoms of earth forms; remove loose dirt prior to placing concrete.

Wood and Prefabricated Forms - Minimize form joints. Symmetrically align joints and make watertight to prevent leakage of mortar for exposed concrete. Arrange and assemble formwork to permit dismantling and stripping so that concrete is not damaged during its removal. Arrange forms to allow stripping without removal of principal shores, where required to remain in place.

C. Erection

Provide bracing to ensure stability of formwork. Strengthen formwork liable to overstressing by construction loads. Camber slabs and beams to achieve ACI 301 tolerances. Provide temporary ports in formwork to facilitate cleaning and inspection. Locate openings at bottom of forms to allow flushing water to drain. Close ports with tight-fitting panels, flush with inside face of forms, neatly fitted so that joints will not be apparent in exposed concrete surfaces. Provide chamfer strips on external exposed corners of beams, joists, and columns. Construct formwork to maintain tolerances in accordance with ACI 301.

D. Application of Form Release Agent

Apply form release agent on formwork in accordance with manufacturer's instructions. Apply prior to placing reinforcing steel, anchoring devices, and embedded items. Do not apply form release agent where concrete surfaces are scheduled to receive special finishes which may be affected by agent. Soak contact surfaces of untreated forms with clean water. Keep surfaces wet prior to placing concrete.

E. Inserts, Embedded Parts, and Openings

Provide formed openings where required for Work embedded in, or passing through, concrete. Coordinate Work of other sections in forming and setting openings, slots, recesses, chases, sleeves, bolts, anchors, and other inserts. Install accessories in accordance with manufacturer's instructions, level, and plumb. Ensure items are not disturbed during concrete placement.

F. Form Removal

Do not remove forms, shoring, and bracing until concrete has sufficient strength to support its own weight, and construction and design loads which may be imposed upon it. Remove load-supporting forms only when concrete has attained seventy-five percent (75%) of required 28-day compressive strength provided construction is reshored. Reshore structural members due to design requirements or construction conditions to permit successive construction. Remove formwork progressively so no unbalanced loads are imposed on structure. Do not damage concrete surfaces during form removal. Store reusable forms for exposed architectural concrete to prevent damage to contact surfaces. Remove formwork in same sequence as concrete placement to achieve similar concrete surface coloration.

G. Cleaning and Tightening

Thoroughly clean forms and adjacent surfaces to receive concrete as erection proceeds and just before concrete placement. Remove chips, wood, sawdust, dirt, and other debris and ensure that water and debris drain from formwork through cleanout ports.

During cold weather, remove ice and snow from forms. Do not use deicing salts. Unless within a heated enclosure, do not use water to clean out forms. Use compressed air to remove foreign matter.

Retighten forms immediately after concrete placement as required to eliminate mortar leaks.

Article 7.4 Concrete

A. Placing Concrete

Before placing concrete, ensure reinforcing is clean, free of loose scale, dirt, or other foreign coatings which would reduce bond to concrete. Ensure that reinforcing is supported and secured against displacement. Do not deviate from true alignment.

Place concrete in accordance with ACI 304.

Notify the Engineer a minimum of twenty-four (24) hours prior to commencement of concreting operations.

Ensure anchors, seats, plates, and other items to be cast into concrete are placed, held securely, and will not cause hardship in placing concrete. If problems are found, rectify same and proceed with Work.

Maintain records of poured concrete items. Record date, location of pour, quantity, air temperature, and test samples taken.

Ensure reinforcement, inserts, embedded parts, formed expansion and contraction joints are not disturbed during concrete placement.

A bonding agent is to be used where pouring against previously placed concrete. Submit manufacturer's product data for the bonding agent to the Engineer for approval. Surface preparation is to be in accordance with the manufacturer's recommendations for the approved product.

Pour concrete continuously between predetermined construction and control joints.

Pour slabs-on-grade in checkerboard pattern or provide control joints to form panels or patterns as shown on the Drawings. If not shown on the Drawings, control joints shall be made by sawing or by approved inserts. Saw cut control joints within twenty-four (24) hours after finishing and use a three-sixteenths inch

(3/16”) thick blade, cutting one-fourth (1/4) of slab thickness. Unless otherwise specified or approved, control joint spacing shall not exceed fifteen feet (15’).

In locations where new concrete is to be doweled to existing work, lay down dowels as shown on the Drawings, drill holes in existing concrete and embed dowels according to the recommendations of the manufacturer of the approved bonding agent. Submit manufacturer's product data for the bonding agent to the Engineer for approval.

Excessive honeycomb or embedded debris in concrete is not acceptable and the Contractor shall notify the Engineer upon discovery.

Conform to ACI 306 when concreting during cold weather.

Install vapor barrier under interior slabs on grade. Lap joints minimum six inches (6”) and seal. Do not disturb or damage vapor barrier while placing concrete reinforcing. If damage does occur, repair areas before placing concrete. Use vapor barrier material, lapped over damaged areas a minimum of six inches (6”) and seal.

Screed slabs-on-fill, maintaining surface flatness of maximum one-eighth inch (1/8”) in ten feet (10’).

B. Patching

Notify the Engineer twenty-four (24) hours in advance to allow inspection of concrete surfaces immediately upon removal of forms. Patch imperfections as directed.

C. Defective Concrete

Modify or replace concrete not conforming to required lines, details, and elevations.

Repair or replace concrete not properly placed resulting in excessive honeycombing and other defects. Do not patch, fill, touchup, repair, or replace exposed concrete except upon express direction of the Engineer for each individual area.

D. Concrete Finishing

Provide standard form finish to all concrete formed surfaces that are to be concealed in the finish work or by other construction.

E. Floor Finishing

Finish concrete floor surfaces in accordance with ACI 302 and ACI 304.

Uniformly spread, screed, and float concrete. Do not use grate tampers or mesh rollers. Do not spread concrete by vibration.

Maintain surface flatness, with maximum variation of one-eighth inch (1/8") in ten feet (10').

In areas with floor drains, maintain floor levels at walls and pitch surfaces uniformly to drains at one-eighth inch (1/8"/ft) per foot, or as directed by the Engineer.

F. Curing and Protection

Beginning immediately after placement, protect concrete from premature drying, excessively hot or cold temperatures, and mechanical injury. Maintain concrete with minimal moisture loss at relatively constant temperature for period necessary for hydration of cement and hardening of concrete.

Article 7.5 Measurement

The item concrete – building structures as identified in the Contract Documents and Drawings shall be measured on a cubic yard basis, complete in place and no separate payment shall be made.

Article 7.6 Basis of Payment

Payment for this Work shall be in accordance with Division 10, Section 10.07 – Measurement and Payment and shall include full payment for all Work described in this Section.

Unit Cost shall be made on the following basis unless otherwise specified:

ITEM	UNIT
Floor Slabs - on grade	C.Y.
Structural Slabs - on grade	C.Y.
Spread Footings	C.Y.
Continuous Footings	C.Y.
Concrete Walls (Inches Thick)	C.Y.

SECTION 30.08 PORTLAND CEMENT CONCRETE CLUSTER MAILBOX BASE

Article 8.1 General

The Work under this Section consists of performing all operations pertaining to furnishing and constructing a cluster mailbox base.

Article 8.2 Materials and Installation

Each cluster mailbox base shall be constructed in conformance with the Drawings. Materials and installation shall meet the requirements of Section 30.03 - Portland Cement Sidewalks and the Drawings.

Article 8.3 Construction

Contractor shall contact the Manager of the Address Management Department, Anchorage District, United State Post Office at 564-2846, forty-eight (48) hours prior to beginning construction of the cluster mailbox base to schedule the final placement of the cluster mailbox unit by the United State Post Office.

Article 8.4 Measurement

The Work shall be measured per each actual cluster mailbox base furnished, constructed, and accepted in place.

Article 8.5 Basis of Payment

Payment for this Work shall be in accordance with Division 10, Section 10.07 - Measurement and Payment and shall include full payment for all Work described in this Section.

Payment shall be made under the following unit:

ITEM	UNIT
P.C.C. Cluster Mailbox Base	Each

SECTION 30.09 CONCRETE PARKING BUMPERS

Article 9.1 Description

This Work item includes the forming, casting, and installation of concrete parking bumpers as shown on the Drawings.

Article 9.2 Material

Reference Section 30.01 - General Provisions.

Concrete class shall be A-3.

Article 9.3 Construction

Contractor shall construct precast concrete parking bumpers in accordance with applicable construction techniques specified in Section 30.02 - Portland Cement Concrete Curb and Gutter, and Valley Gutter. Parking bumpers shall be seven feet (7') long and seven inches (7") tall. Parking bumpers shall be ten inches (10") wide at the base and taper to six inches (6") wide at the top. Parking bumpers shall be firmly set in place with two (2) eighteen inch (18") long #5 rebar.

Article 9.4 Basis of Payment

Payment for this Work shall be in accordance with Division 10, Section 10.07 - Measurement and Payment, and shall include full payment for all Work described in this Section.

Payment will be made under the following unit:

ITEM	UNIT
Concrete Parking Bumpers	Each

SECTION 30.10 COLORED CONCRETE

Article 10.1 General

The Work under this Section consists of providing all operations and materials necessary to install colored concrete. All Work shall be in accordance with this Section and shall be placed at the locations shown on the Drawings.

Article 10.2 Materials

The Portland Cement concrete and curing materials shall conform to Section 30.01, Article 1.3 - Materials, as modified below:

A. Concrete

Concrete mix for imprinted colored concrete shall conform to Section 30.01, Article 1.6 – Mix Requirements for Classes of Concrete, requirements for Class AA-3, normal weight concrete. Contractor shall make white concrete using white cement, white aggregate, and white sand. Contractor shall use Davis Color #160, Brick Red, available from Davis Color, Los Angeles, California or approved equal, at a rate of 5 pounds of color per sack of cement to make colored concrete.

B. Imprint

Where imprinted concrete is called for on the Drawings, the Contractor shall use “Bomanite Running Bond Tile” available from Bomanite Corporation, Palo Alto, California, or another concrete imprinting system of approved equal performance.

C. Expansion Joints

Filler material shall be non-asphaltic material, one-half inch (1/2") wide and four inches (4") deep, with the top one inch (1") strippable. Primer shall be “Externaflex” 1993 or approved equal. Backer rod shall be closed cell polyethylene. Sealant shall be “Externaflex” two-compound urethane, “pour grade” No. 1071-200, or approved equal. Contractor shall use the appropriate sealant color to match the colored concrete, including Brick Red sealant to match the red concrete.

Article 10.3 Construction

The excavation and embankment, forms and fine grading, placing and finishing, curing and protection operations for imprinted colored concrete shall conform to Section 30.03, Article 3.3 – Construction as amended below:

Place imprinted colored concrete in dry weather with temperatures above forty degrees (40°) Fahrenheit.

Where imprinted concrete is called for in the Drawings, the Contractor shall apply the imprinting tool while the concrete is still in the plastic stage of set in conformance with the manufacturer's specifications.

Article 10.4 Measurement

Imprinted colored concrete shall be measured per square yard, complete and in place.

Article 10.5 Basis of Payment

Payment for this Work shall be in accordance with Division 10, Section 10.07 - Measurement and Payment and shall include full payment for all Work described in this Section.

Payment shall be made under the following unit:

ITEM	UNIT
Colored Concrete (Color) (Thickness) (Imprinted)	Square Yard

SECTION 30.11 SIDEWALK JOINT SEALANT

Article 11.1 General

The Work under this Section consists of performing all operations pertaining to preparing and sealing joints in existing sidewalk for the purposes of sealing and repair. This Section is not applicable to joint sealant utilized during the construction of new concrete work.

Article 11.2 Materials

Sealant materials shall be Elastomeric (in accordance with ASTM C-920) long lasting, and resist deterioration caused by weather, street, movement, traffic, and water. Sealant materials shall be approved by the Engineer prior to use. The sealant color shall closely match adjacent concrete sidewalk.

Article 11.3 Construction

Joint sealant shall be applied to joints with dimensions between one-half inch (1/2") and one inch (1") in width, as directed by the Engineer. The sealant shall be applied in conformance with the manufacturer's instructions and to full depth of the joint.

The joints shall be cleaned and all loose material shall be blown out to the full depth of the joint. The interior of the joint shall be completely dried and existing sidewalk surfaces shall be exposed.

Article 11.4 Measurement

The application of joint sealant shall be measured per linear foot of sealant applied as directed by the Engineer for sidewalk patch and repair. Payment for joint sealant used during construction of new concrete work is governed by the appropriate Section for that installation, is considered incidental to that pay item, and no payment shall be made under this Section.

Article 11.5 Basis of Payment

Payment for this Work shall be in accordance with Division 10, Section 10.07 - Measurement and Payment and shall include full payment for all Work described in this Section.

Payment shall be made under the following unit:

ITEM	UNIT
Joint Sealant	Linear Foot

MUNICIPALITY OF ANCHORAGE
STANDARD SPECIFICATIONS

DIVISION 30
PORTLAND CEMENT CONCRETE
STANDARD DETAILS

STANDARD CONSTRUCTION SPECIFICATIONS
MISCELLANEOUS
DIVISION 30
INDEX OF STANDARD DETAILS

30-1	Curb and Gutter Cross Sections
30-2	Curb and Gutter Termination Transition
30-3	Typical Section - Valley Gutter
30-4	Typical Section - Median/Curb Nose
30-5	Steel Curb Facing
30-6	Driveway Curb-cut with Attached Sidewalk
30-7	Driveway Curb Return with Attached Sidewalk
30-8	Perpendicular Curb Ramp
30-9	Parallel Curb Ramp
30-10	Accessible (Type 1A/2A) Curb and Gutter Sections
30-11	Curb Ramp Clearances
30-12	Pedestrian Push Button Access
30-13	Curb Type Retaining Wall - 2’ to 3’
30-14	Sidewalk Retaining Wall - 6” to 24”
30-15	Sidewalk Retaining Wall - 2’ to 5’

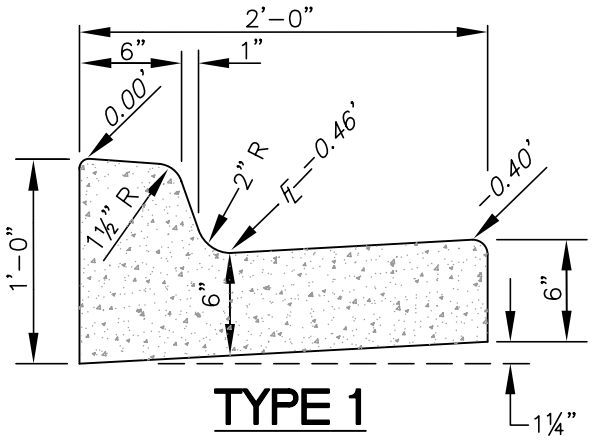

TYPE 1

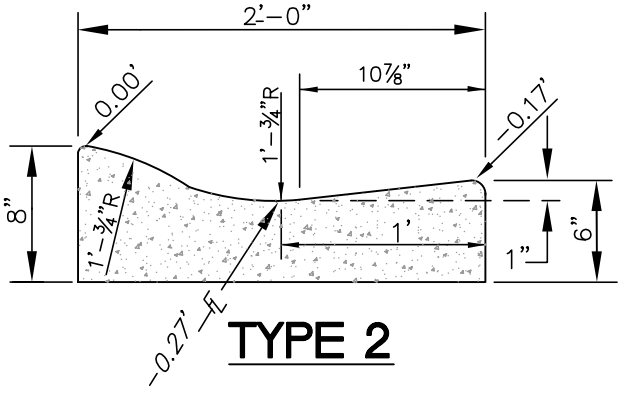

TYPE 2

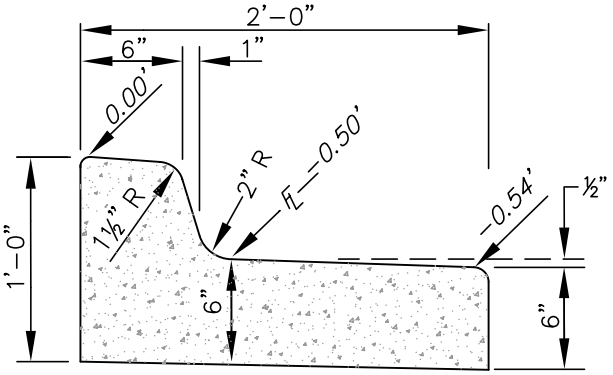

TYPE 3

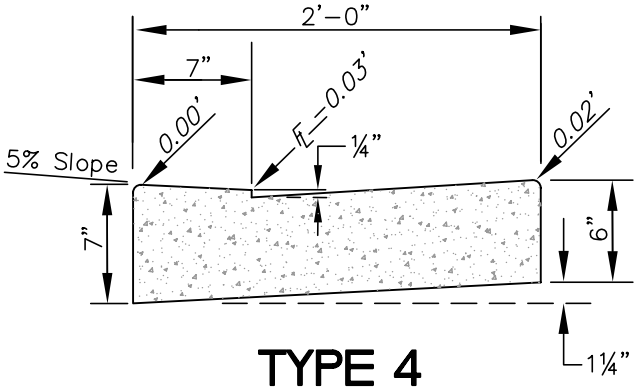

TYPE 4

(USED AT CURB CUTS)

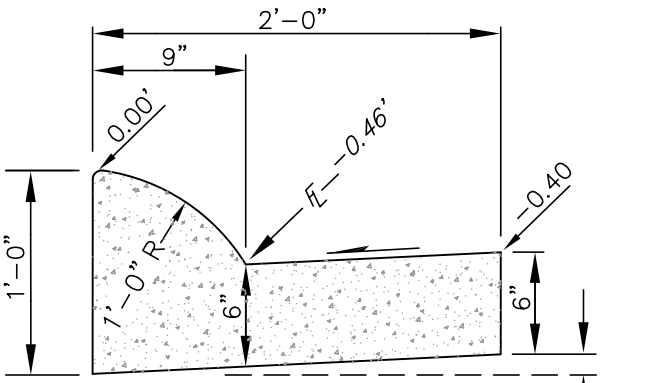

TYPE 5

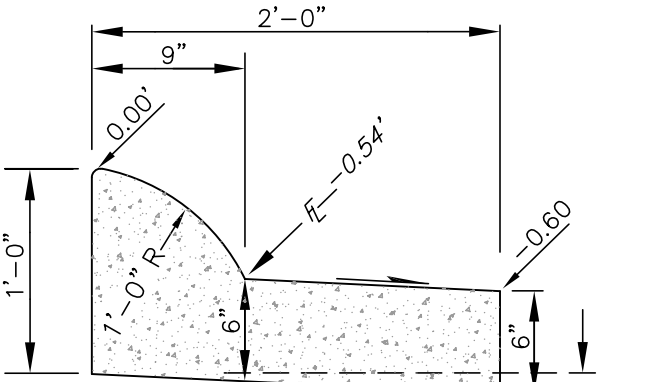

TYPE 6

NOTE:

TROWEL BOTH FRONT AND BACK EDGES OF THE CURB & GUTTER TO A RADIUS OF ONE–HALF (1/2) INCH.

MUNICIPALITY OF ANCHORAGE	SCALE: NTS APPROVED: REVISED: 12/09	CURB AND GUTTER CROSS SECTIONS	SECTION # 30.02 DETAIL # 30–1

REVISION: 12/09 FIXED TYPE 2 CURB & GUTTER

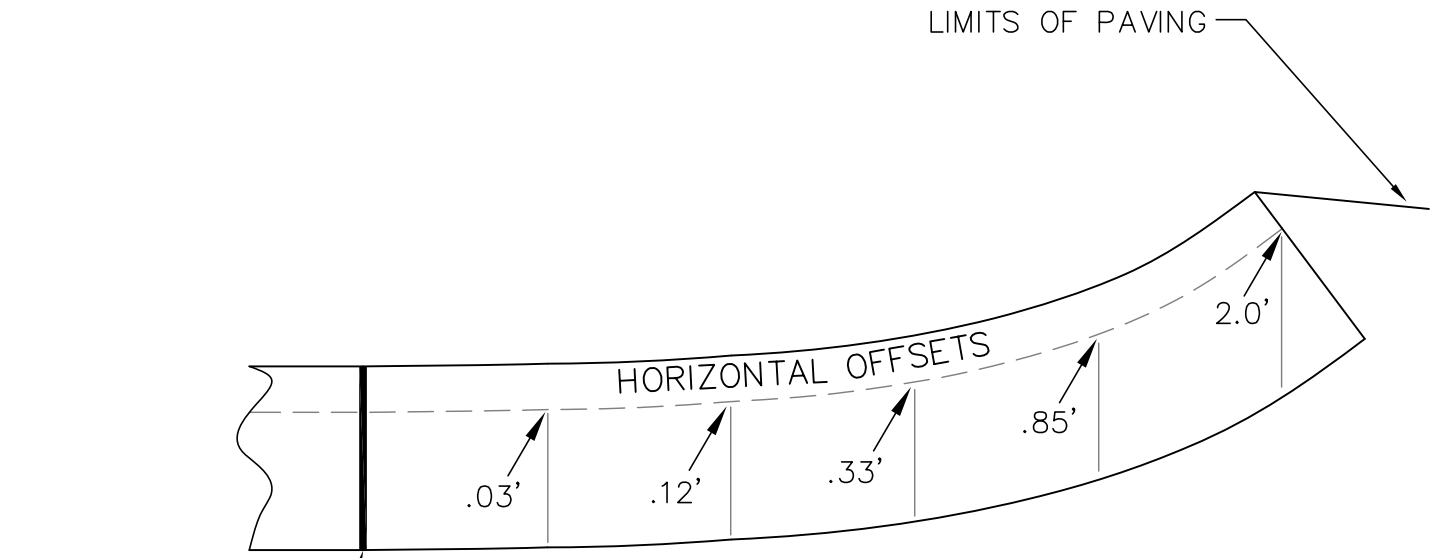

PLAN

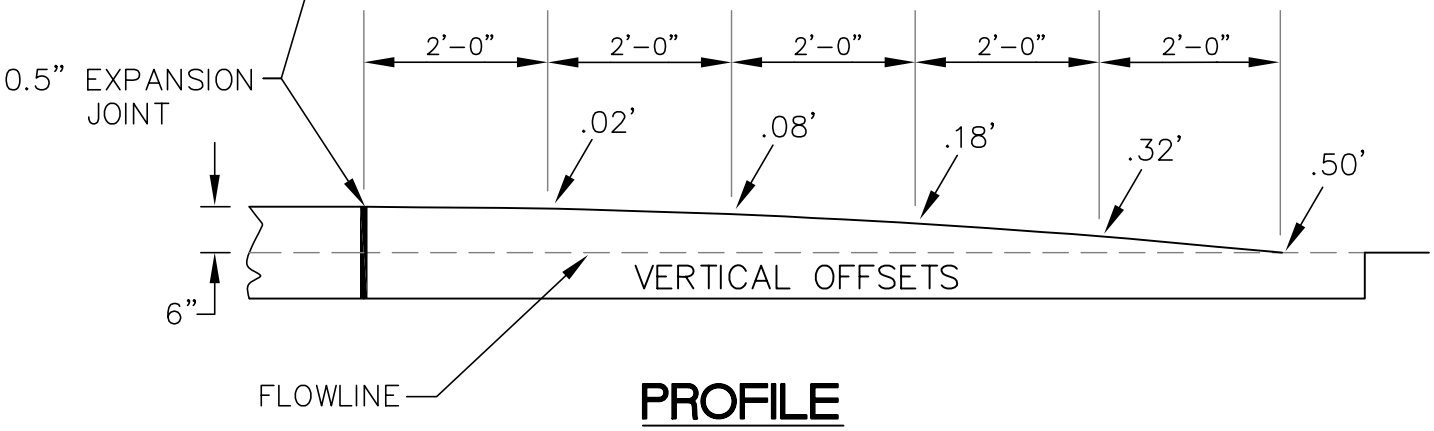

PROFILE

MUNICIPALITY OF ANCHORAGE	SCALE: NTS APPROVED: REVISED: 10/07	CURB AND GUTTER TERMINATION TRANSITION	SECTION # 30.02 DETAIL # 30-2

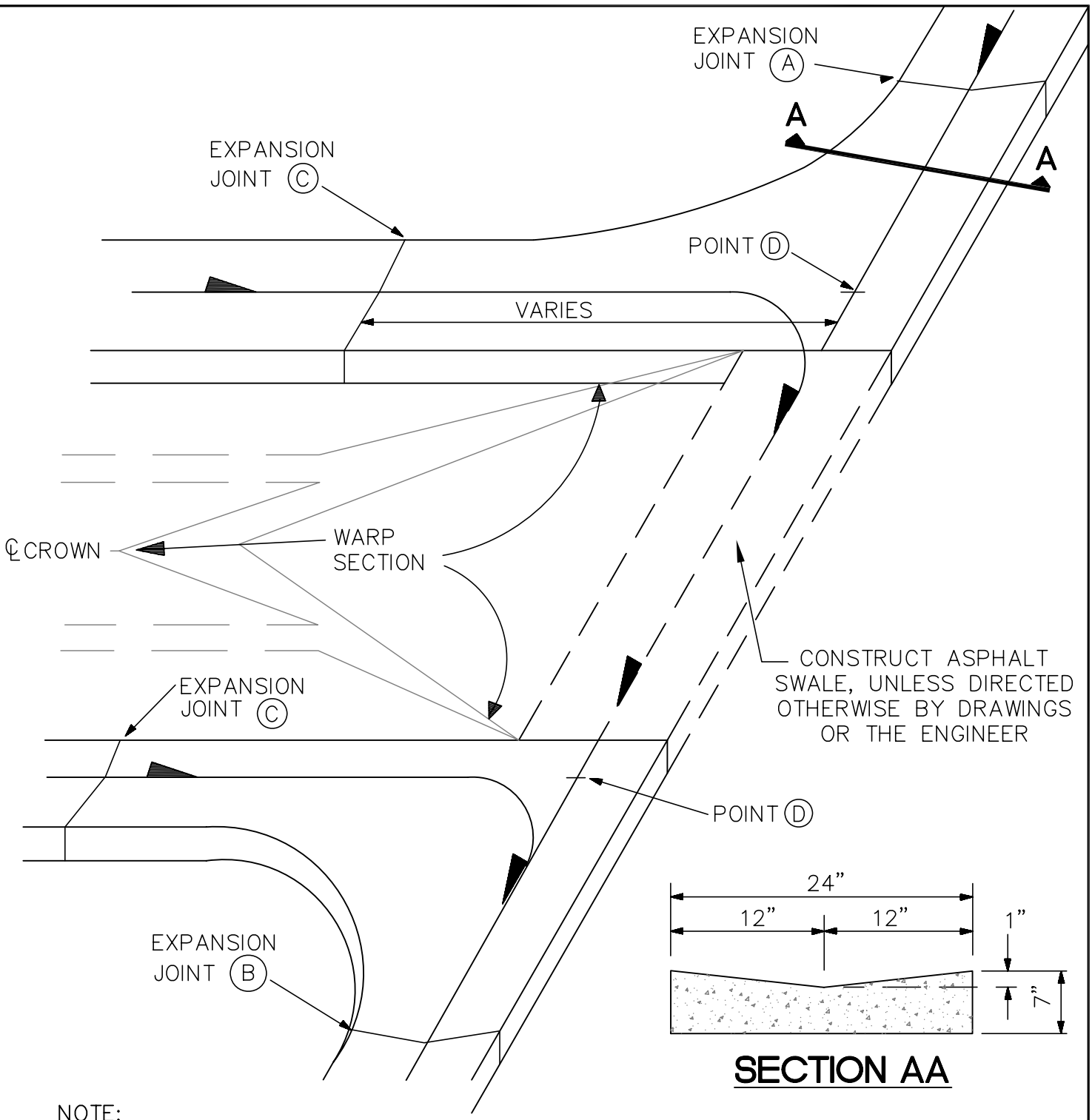

SECTION AA

NOTE:
VALLEY GUTTER SHALL BE PAID PER LINEAR FOOT UNDER BID ITEM "VALLEY GUTTER". MEASURE LENGTHS ALONG THE STRAIGHT FLOW LINE FROM EXPANSION JOINTS "A" AND "B" TO POINT "D" AND ON BOTH SIDES FROM EXPANSION JOINT "C" TO THE POINT "D". THE STREET SECTION SHALL BE MEASURED FROM POINT "D" TO POINT "D". IF P.C.C., THE STREET SECTION SHALL BE INCLUDED UNDER BID ITEM "VALLEY GUTTER'. IF ASPHALT, THE STREET SECTION COST SHALL BE INCLUDED UNDER THE APPROPRIATE PAVING BID ITEM.

MUNICIPALITY OF ANCHORAGE	SCALE: NTS APPROVED: REVISED: 10/07	# TYPICAL SECTION VALLEY GUTTER	SECTION # 30.02 DETAIL # 30–3

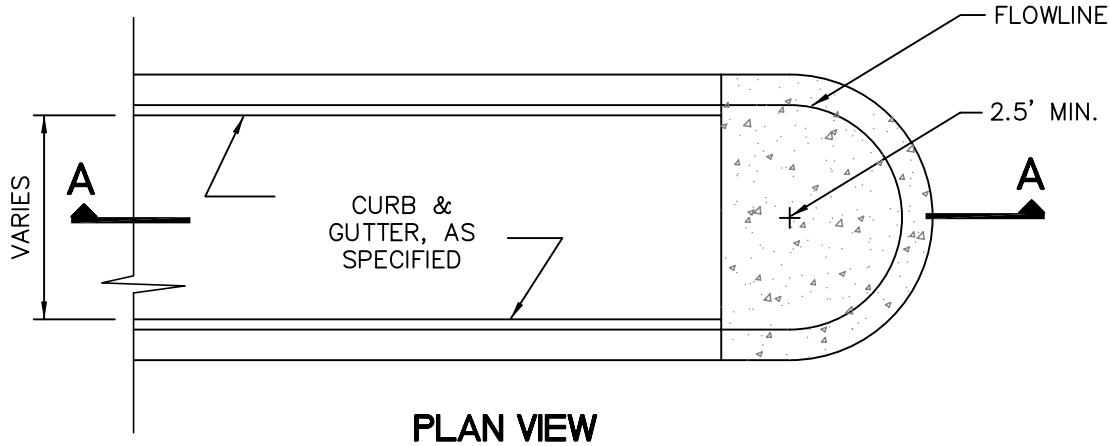

PLAN VIEW

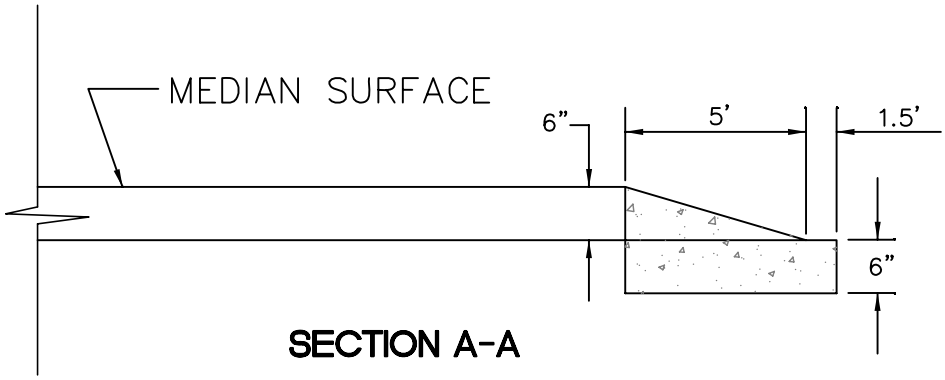

SECTION A-A

NOTE:

PAINT MEDIAN AND CURB NOSE WITH YELLOW TRAFFIC PAINT, THE PAINT SHALL BE CONSIDERED INCIDENTAL TO THE BID ITEM "CURB NOSE".

MUNICIPALITY OF ANCHORAGE	SCALE: NTS APPROVED: REVISED: 10/07	**TYPICAL SECTION MEDIAN/CURB NOSE**	SECTION # 30.02 DETAIL # 30–4

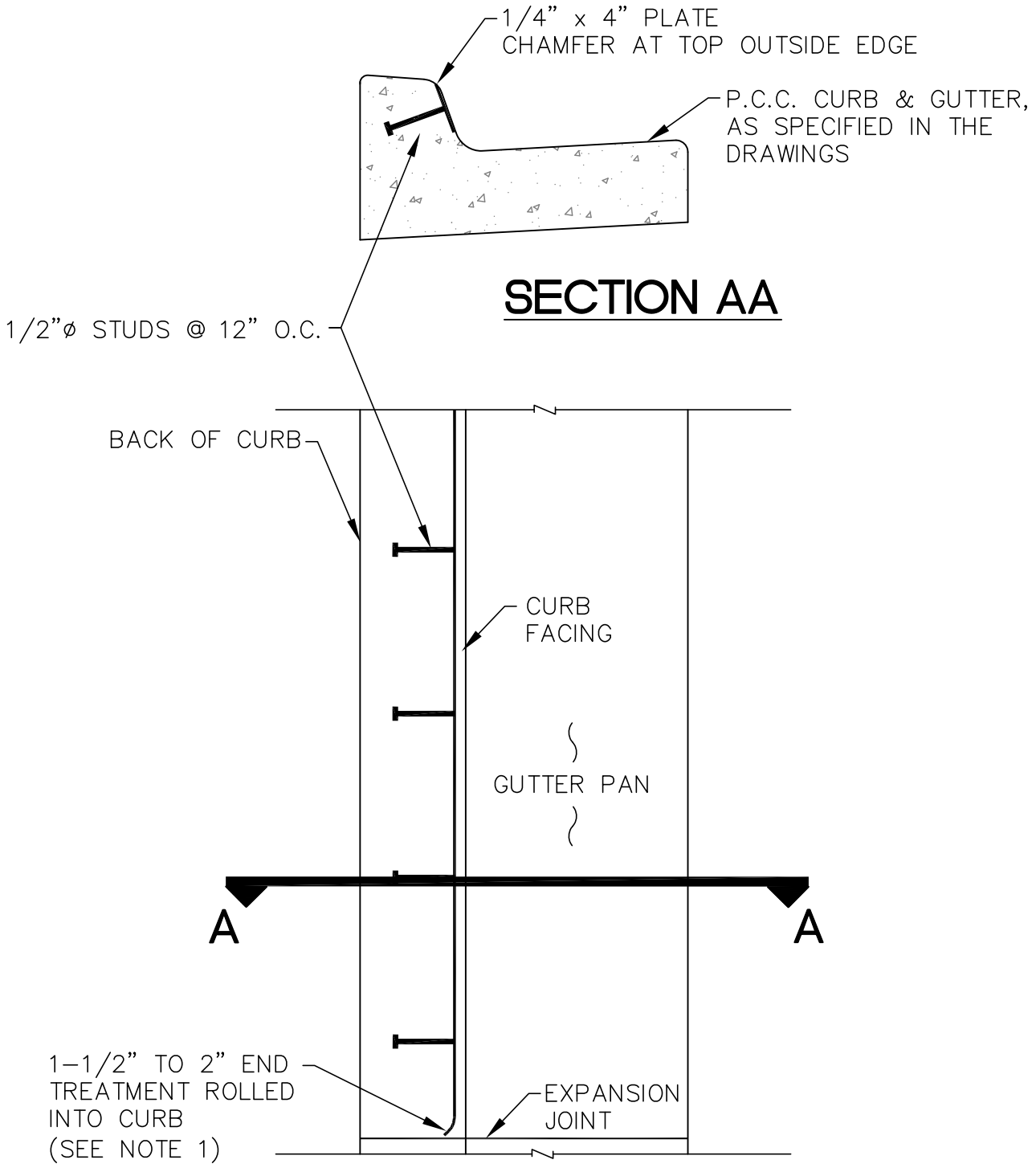

NOTES:

1. BEND LEADING AND TRAILING EDGES 90° AND EMBED IN 1-1/2" MINIMUM CONCRETE.
2. STEEL CURB FACING SHALL BE INSTALLED ONLY IN LOCATIONS WHERE THERE IS A CURVILINEAR TRANSITION TO THE CURB FACE SUCH AS IN A CURB BULB OR TRANSIT PULL-OUT.
3. CONTRACTOR SHALL INSTALL STEEL CURB FACING SO THAT THE CHAMFERED EDGE IS FLUSH WITH THE TOP OF CURB.

MUNICIPALITY OF ANCHORAGE	SCALE: NTS APPROVED: REVISED: 3/12	STEEL CURB FACING	SECTION # 30.02 DETAIL # 30-5

REVISION: 2/2012 ADDED PLAN VIEW & CHANGED PLATE SIZE TO 4"

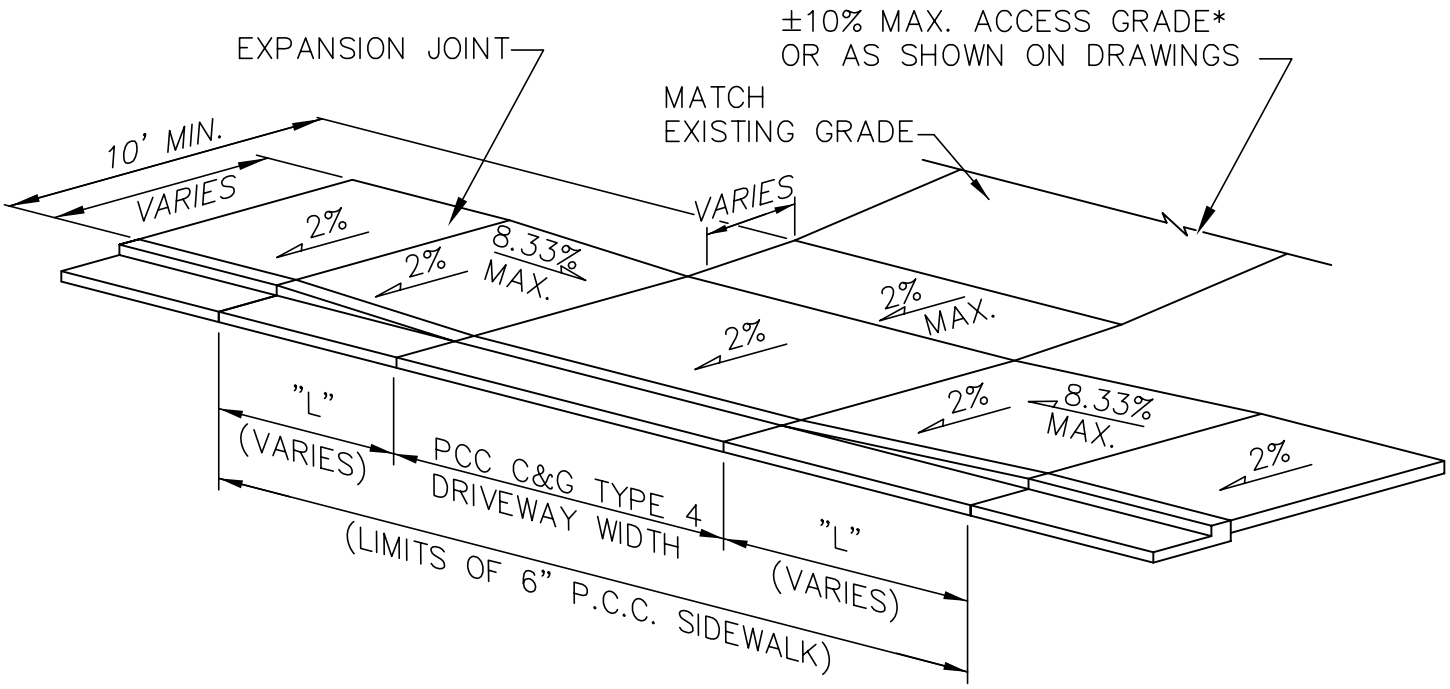

TYPICAL DRIVEWAY ENTRANCE
(WITH ATTACHED SIDEWALK)

DRIVEWAY RAMP RUNNING SLOPE TABLE		
STREET RUNNING SLOPE	MINIMUM UPHILL RAMP LENGTH "L"	MINIMUM DOWNHILL RAMP LENGTH "L"
0.0% TO 0.5%	6.0'	6.0'
> 0.5% TO 1.6%	7.0'	6.0'
> 1.6% TO 2.4%	8.0'	5.0'
> 2.4% TO 3.1%	9.0'	5.0'
> 3.1% TO 3.6%	10.0'	5.0'
> 3.6% TO 4.0%	11.0'	4.0'
> 4.0% TO 4.4%	12.0'	4.0'
> 4.4% TO 4.7%	13.0'	4.0'
> 4.7% TO 5.0%	14.0'	4.0'
> 5.0%	15.0'	4.0'

* MAXIMUM ALGEBRAIC DIFFERENCE IS 8% ON COMMERCIAL/INDUSTRIAL DRIVEWAYS.

MUNICIPALITY OF ANCHORAGE	SCALE: NTS APPROVED: REVISED: 4/08	DRIVEWAY CURB-CUT WITH ATTACHED SIDEWALK	SECTION # 30.03 DETAIL # 30–6

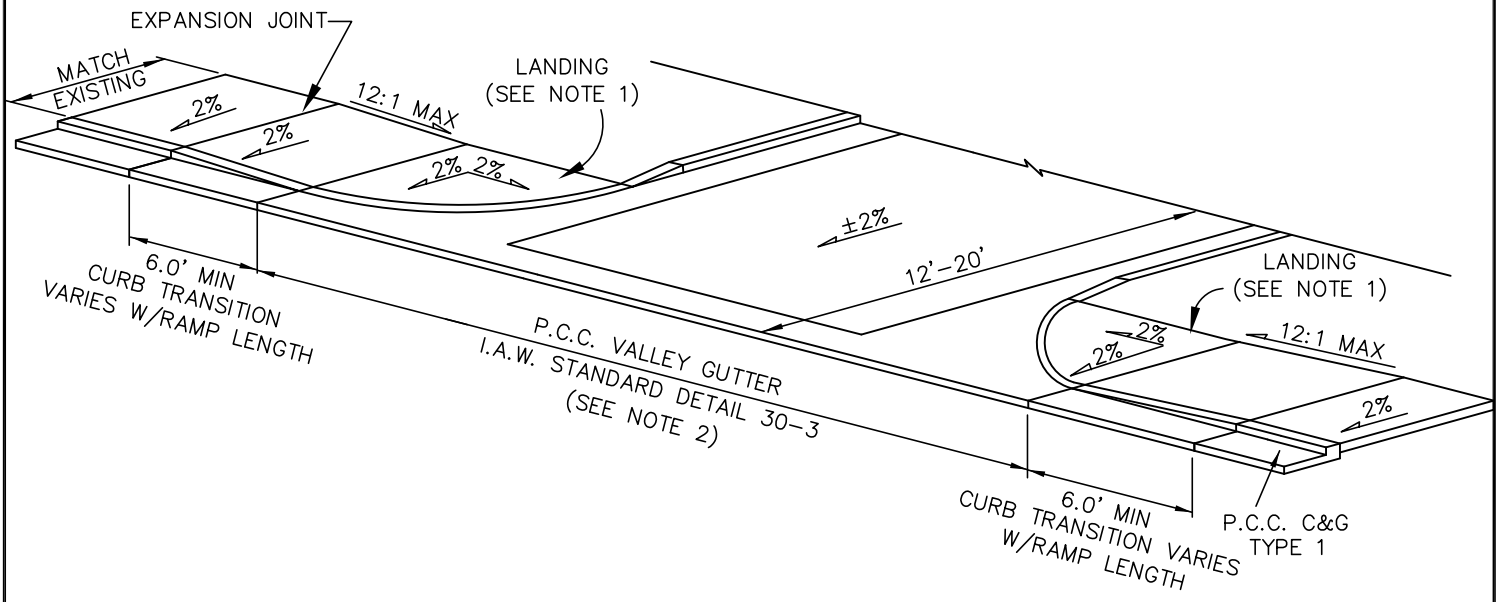

NOTES:

1. SIZE LANDING TO MEET ADA REQUIREMENTS.
2. ASPHALT CONCRETE SWALES TO BE CONSTRUCTED ON ALL ROADWAYS UNLESS P.C.C. VALLEY GUTTER IS SPECIFIED ON DRAWINGS. CONTRACTOR TO DEPRESS LIPS OF GUTTER TO ENSURE ADEQUATE DRAINAGE.

REVISION: 12/12 ASPHALT SWALES STANDARD UNLESS OTHERWISE SPECIFIED

MUNICIPALITY OF ANCHORAGE	SCALE: NTS APPROVED: REVISED: 12/12	DRIVEWAY CURB RETURN WITH ATTACHED SIDEWALK	SECTION # 30.03 DETAIL # 30-7

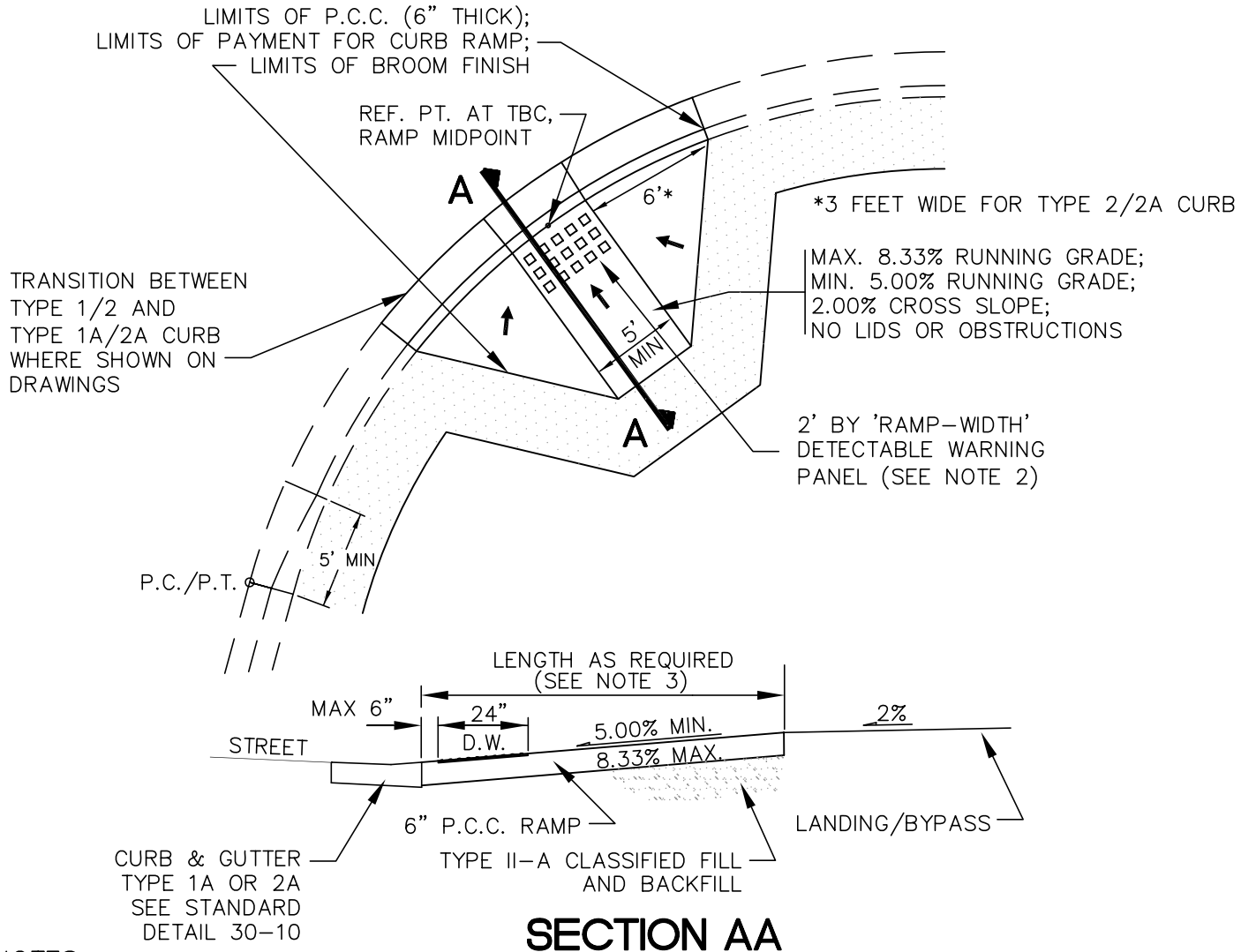

SECTION AA

NOTES:

1. CONSTRUCT PERPENDICULAR RAMPS AND FLARES WITH A BROOM FINISH PARALLEL TO THE CURB.
2. INSTALL DETECTABLE WARNING PANELS (D.W.) IN ACCORDANCE WITH MANUFACTURER'S RECOMMENDATIONS AND THE DRAWINGS. SET DETECTABLE WARNINGS SO THAT THE FIELD AREA AT THE BASE OF THE DOMES IS FLUSH WITH SURROUNDING CONCRETE. NO LIP IS ALLOWED AT THE EDGE OF THE DETECTABLE WARNINGS.
3. RAMP LENGTH REQUIRED FOR A TYPICAL SIDEWALK IS 8.0' FOR A TYPE 1/1A CURB, AND 4.0' FOR A TYPE 2/2A CURB. LENGTH VARIES FOR SIDEWALKS WITH DETACHED AND/OR INDEPENDENT GRADES. SEE DRAWINGS FOR NON-STANDARD RAMP LENGTHS.
4. TRIM OUTSIDE EDGES AND JOINTS OF RAMP AND FLARES WITH ONE-QUARTER INCH (1/4") RADIUS EDGING TOOL.
5. SEE DRAWINGS FOR REFERENCE POINT STATION AND OFFSET.
6. WHEN NO CONNECTING SIDEWALK, THE BY-PASS MUST CONTINUE AROUND THE RAMP BEFORE TERMINATING IN SIDE STREET.

MUNICIPALITY OF ANCHORAGE	SCALE: NTS APPROVED: REVISED: 12/09	PERPENDICULAR CURB RAMP	SECTION # 30.04 DETAIL # 30-8

REVISION: 12/09 CHANGED MIN RAMP WIDTH TO 5'; CHANGED RUNNING GRADE MIN TO CORRESPOND TO STDS

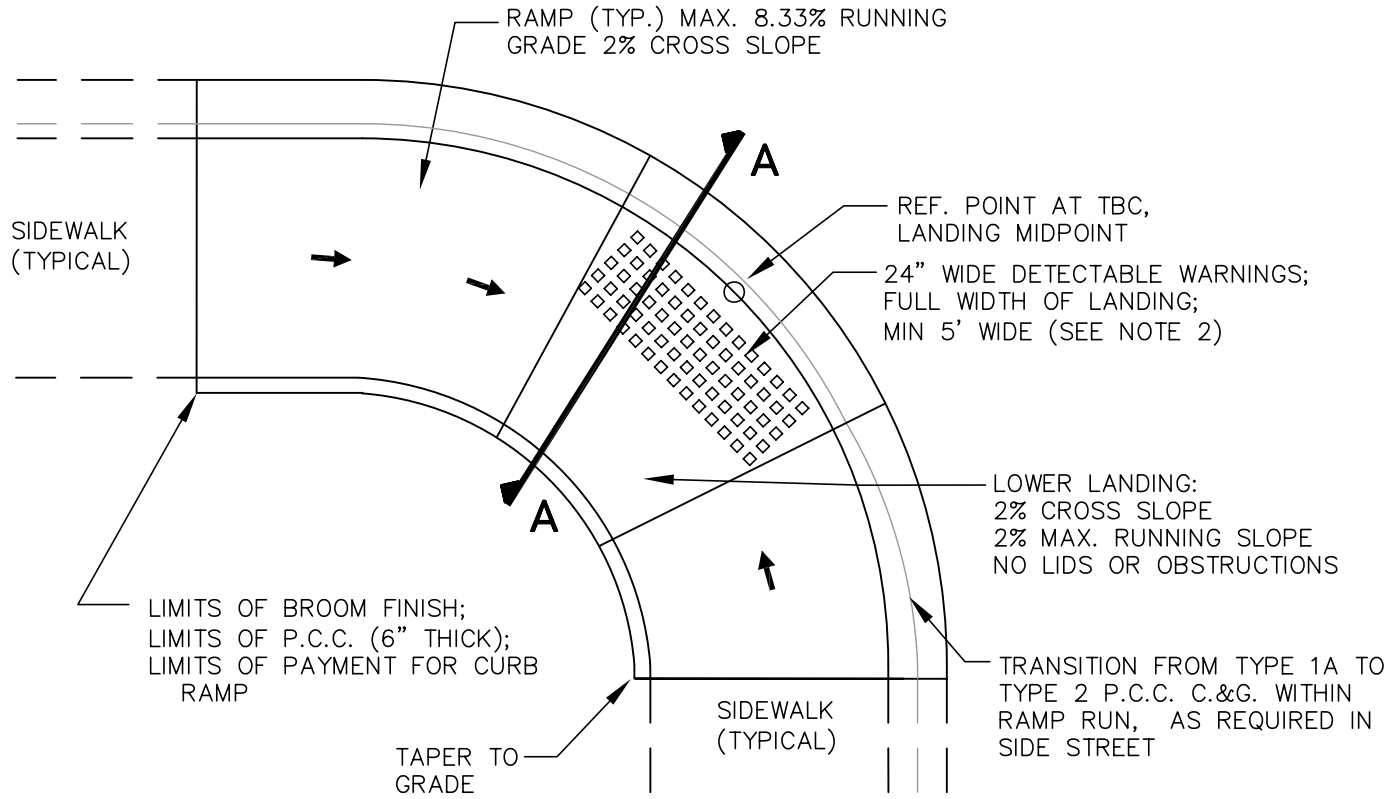

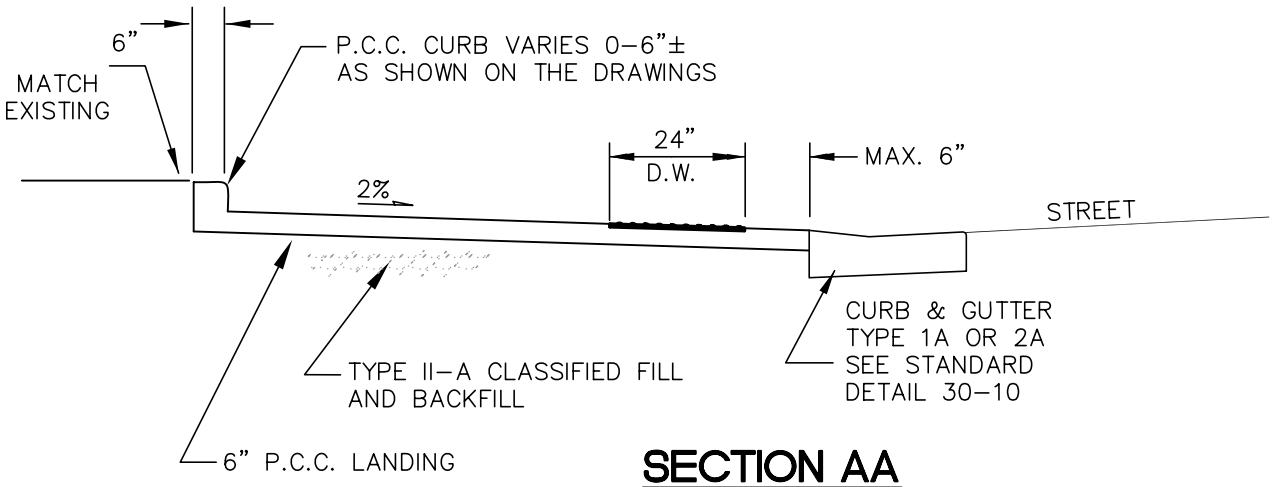

SECTION AA

NOTES:

1. RAMP LENGTHS AND REFERENCE POINT STATION AND OFFSET SHALL BE AS SHOWN ON DRAWINGS.
2. INSTALL DETECTABLE WARNINGS (D.W.) IN ACCORDANCE WITH MANUFACTURER'S RECOMMENDATIONS AND THESE DRAWINGS. SET DETECTABLE WARNINGS SO THAT THE FIELD AREA AT THE BASE OF THE DOMES IS FLUSH WITH THE SURROUNDING CONCRETE. NO LIP IS ALLOWED AT THE EDGE OF THE DETECTABLE WARNINGS.
3. CONSTRUCT RAMPS AND LANDINGS WITH A BROOM FINISH PERPENDICULAR TO CURB.

REVISION: 12/09 CHANGED MINIMUM RAMP WIDTH TO 5'

MUNICIPALITY OF ANCHORAGE	SCALE: NTS APPROVED: REVISED: 12/09	PARALLEL CURB RAMP	SECTION # 30.04 DETAIL # 30–9

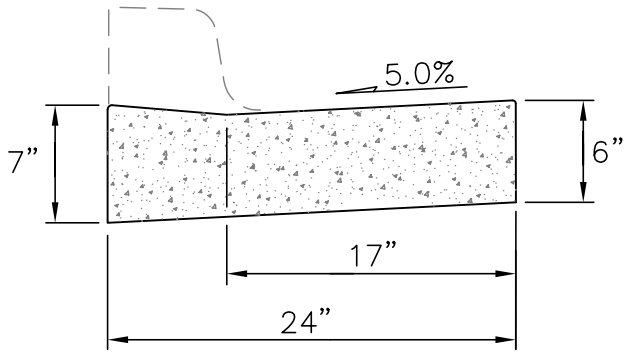

P.C.C. CURB AND GUTTER
TYPE 1A
(FOR USE IN CURB RAMPS)

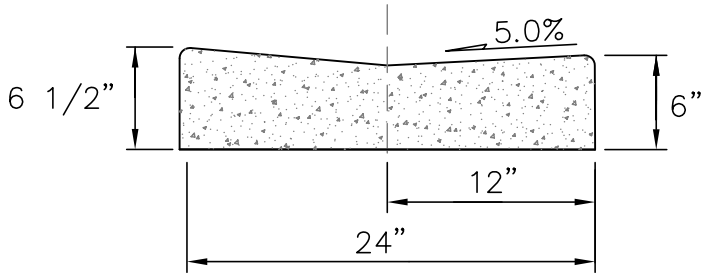

P.C.C. CURB AND GUTTER
TYPE 2A
(FOR USE IN CURB RAMPS)

NOTES:

1. TRANSITION CURBS TO MAINTAIN CONSTANT FLOWLINE ACROSS CURB RAMP AND AROUND CURB RETURN PER THE DRAWINGS.

MUNICIPALITY OF ANCHORAGE	SCALE: NTS APPROVED: REVISED: 8/08	**ACCESSIBLE (TYPE 1A/2A) CURB AND GUTTER SECTIONS**	SECTION # 30.04 DETAIL # 30–10

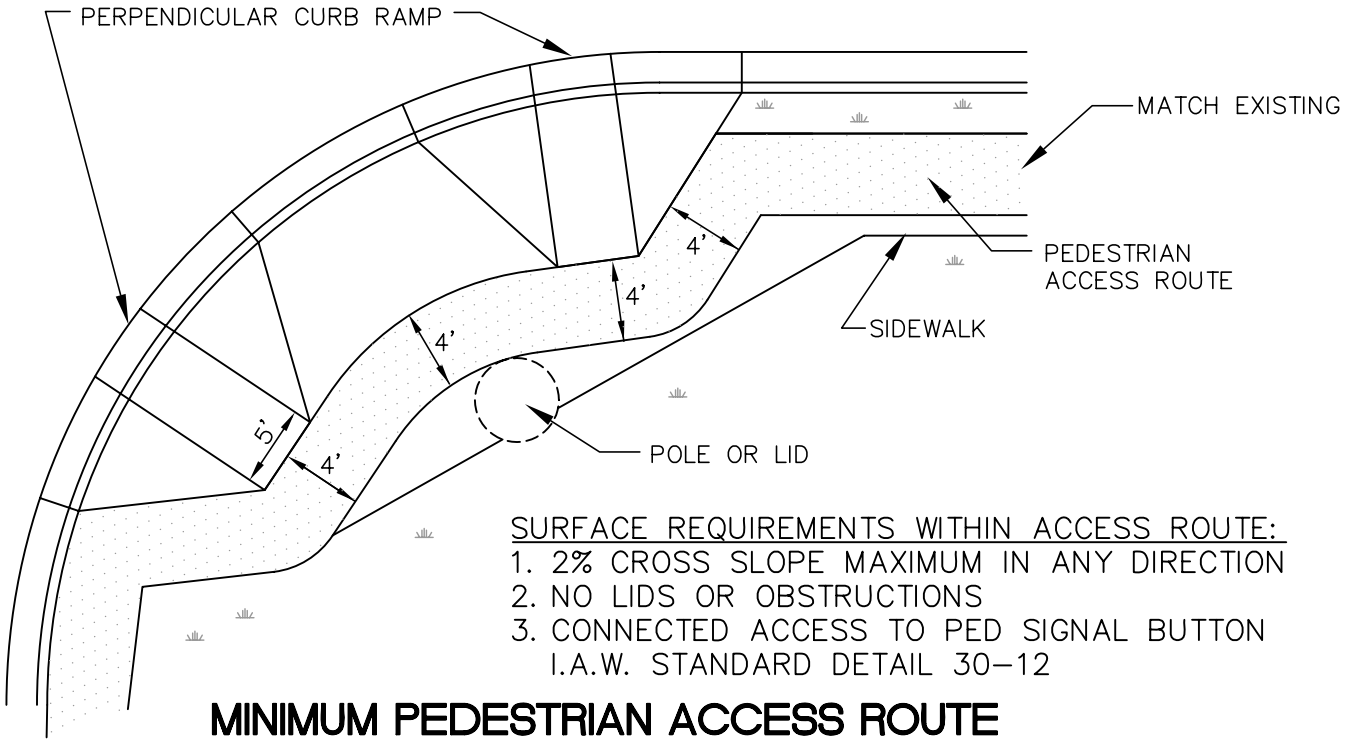

SURFACE REQUIREMENTS WITHIN ACCESS ROUTE:
1. 2% CROSS SLOPE MAXIMUM IN ANY DIRECTION
2. NO LIDS OR OBSTRUCTIONS
3. CONNECTED ACCESS TO PED SIGNAL BUTTON I.A.W. STANDARD DETAIL 30–12

MINIMUM PEDESTRIAN ACCESS ROUTE AROUND PERPENDICULAR CURB RAMPS

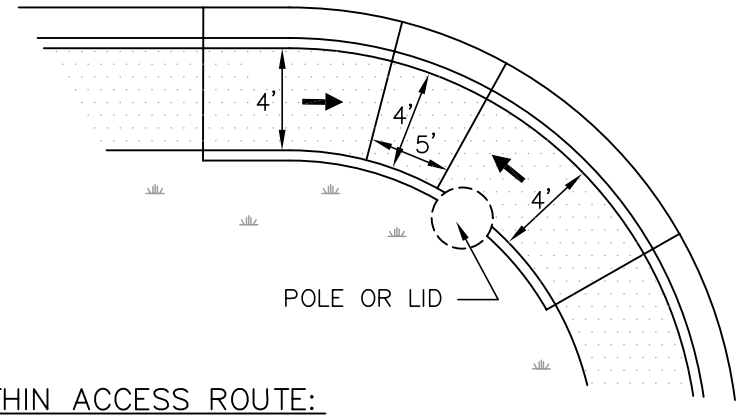

SURFACE REQUIREMENTS WITHIN ACCESS ROUTE:
1. 2% CROSS SLOPE MAXIMUM IN ANY DIRECTION
2. NO LIDS OR OBSTRUCTIONS
3. CONNECTED ACCESS TO PED SIGNAL BUTTON I.A.W. STANDARD DETAIL 30–12

MINIMUM PEDESTRIAN ACCESS ROUTE THROUGH PARALLEL RAMPS

MUNICIPALITY OF ANCHORAGE	SCALE: NTS APPROVED: REVISED: 12/09	CURB RAMP CLEARANCES	SECTION # 30.04 DETAIL # 30–11

REVISION: 12/09 CHANGED MINIMUM RAMP WIDTH TO 5'

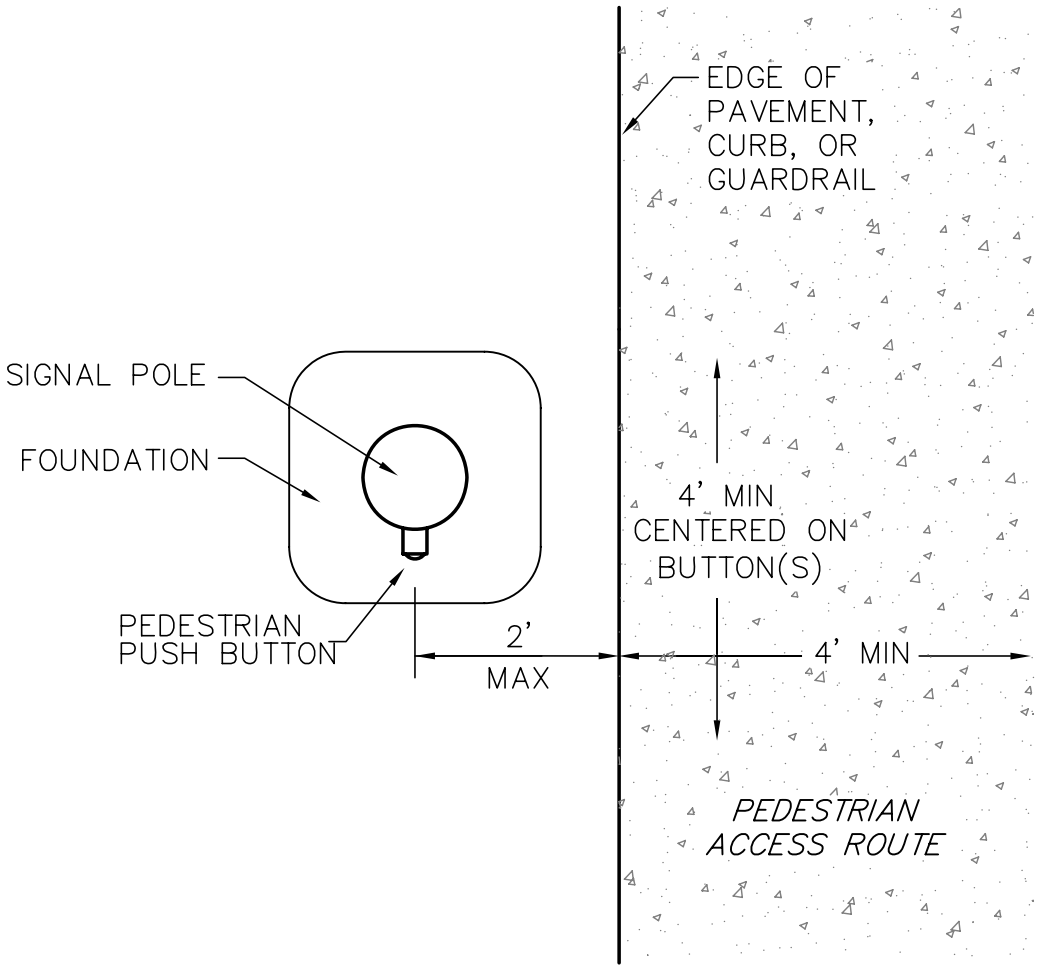

ACCESSIBLE PEDESTRIAN PUSH BUTTON APPROACH

NOTES:

1. PEDESTRIAN PUSH BUTTONS SHALL HAVE AN ACCESSIBLE APPROACH AS SHOWN.
2. APPROACH AREA SHALL JOIN OR OVERLAP THE MAIN SIDEWALK/PATHWAY, AND SHALL BE SURFACED WITH THE SAME MATERIAL.
3. APPROACH SHALL NOT EXCEED 2% SLOPE IN ANY DIRECTION.
4. APPROACH SHALL BE FREE FROM LIDS, OBSTRUCTIONS, AND LIPS.

Mmunicipality of Anchorage	SCALE: NTS APPROVED: REVISED: 8/08	**PEDESTRIAN PUSH BUTTON ACCESS**	SECTION # 30.04 DETAIL # 30–12

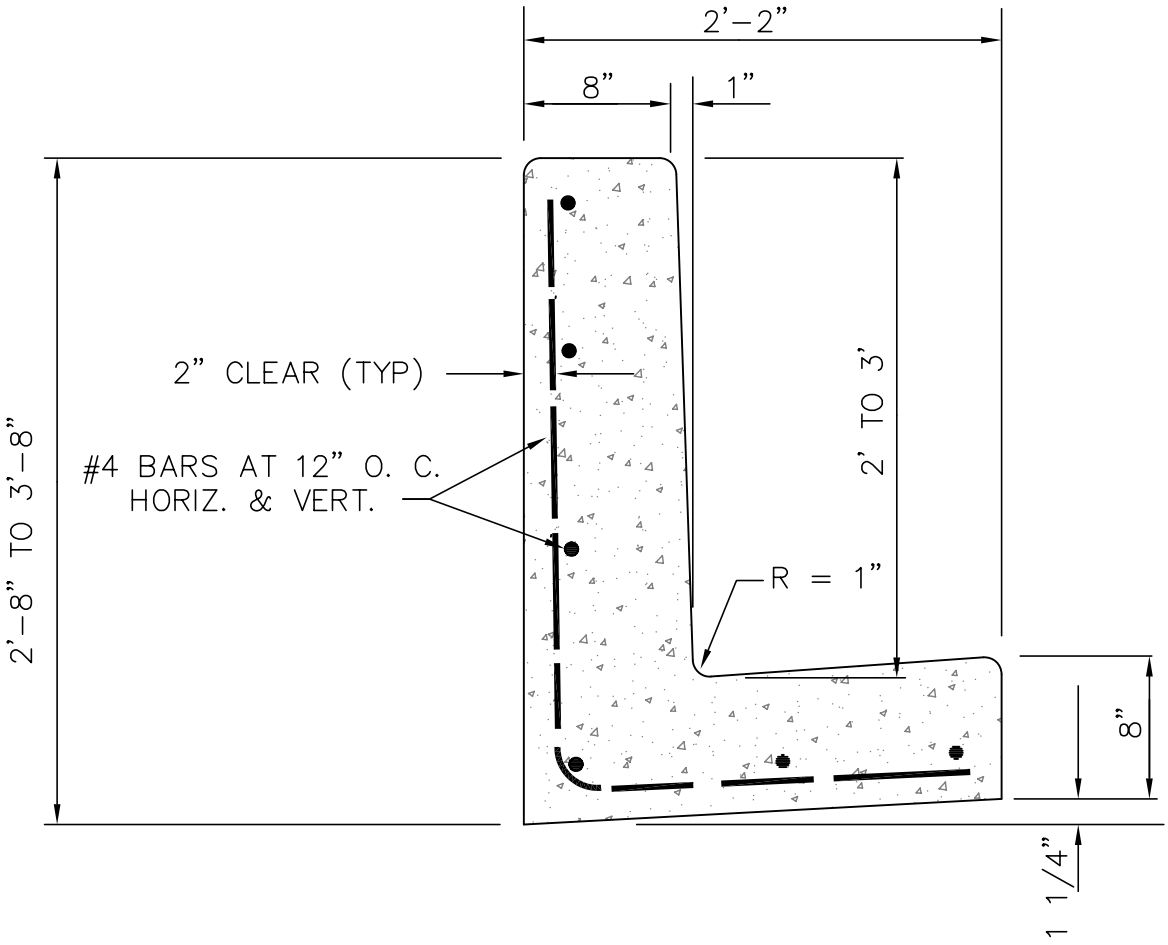

NOTE:

PROVIDE 3/4" X 3/4" CHAMFERED CORNERS AT ALL OUTSIDE EDGES.

MUNICIPALITY OF ANCHORAGE	SCALE: NTS APPROVED: REVISED: 8/08	**CURB TYPE RETAINING WALL 2' TO 3'**	SECTION # 30.05 DETAIL # 30–13

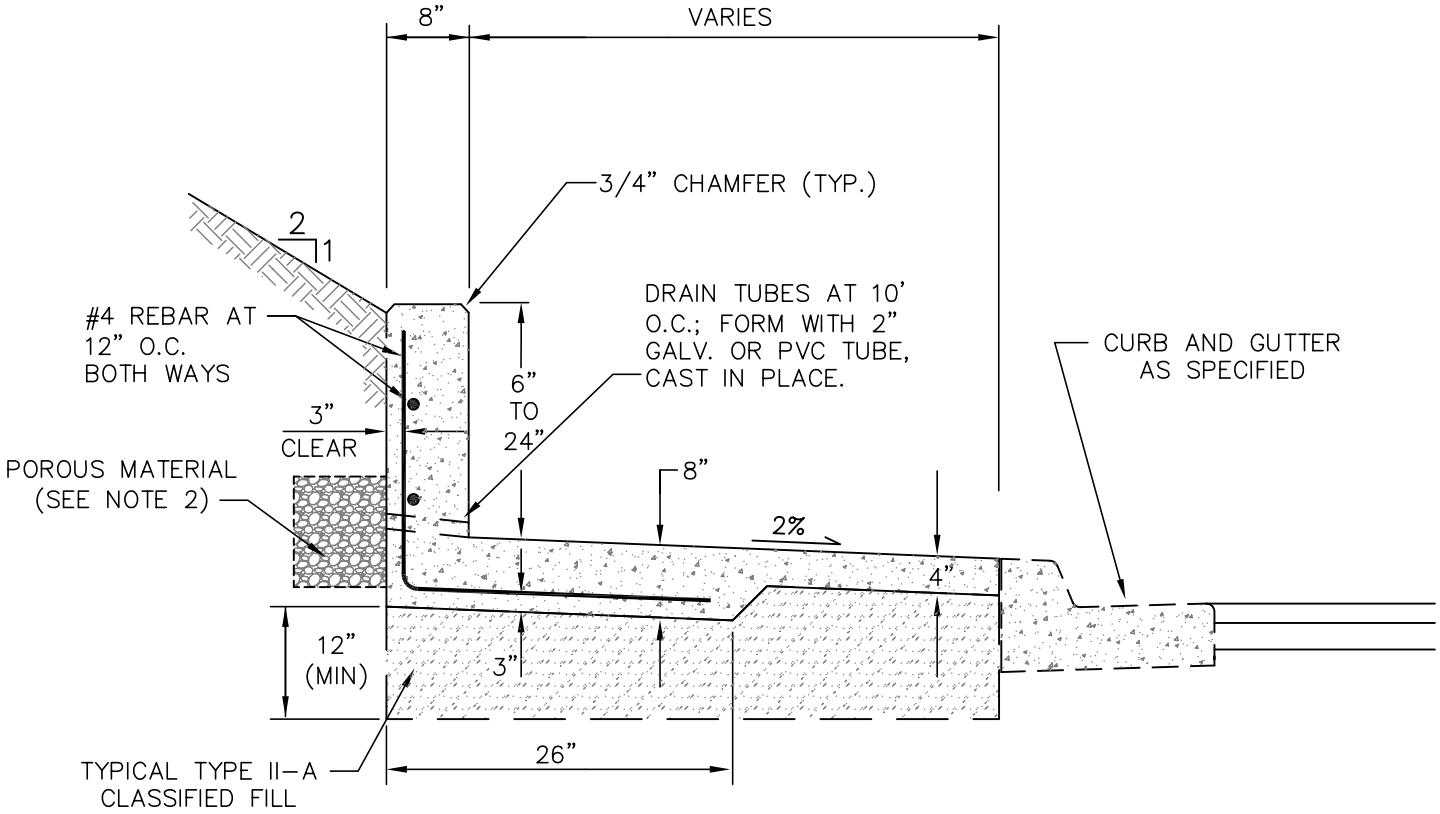

SIDEWALK RETAINING WALL

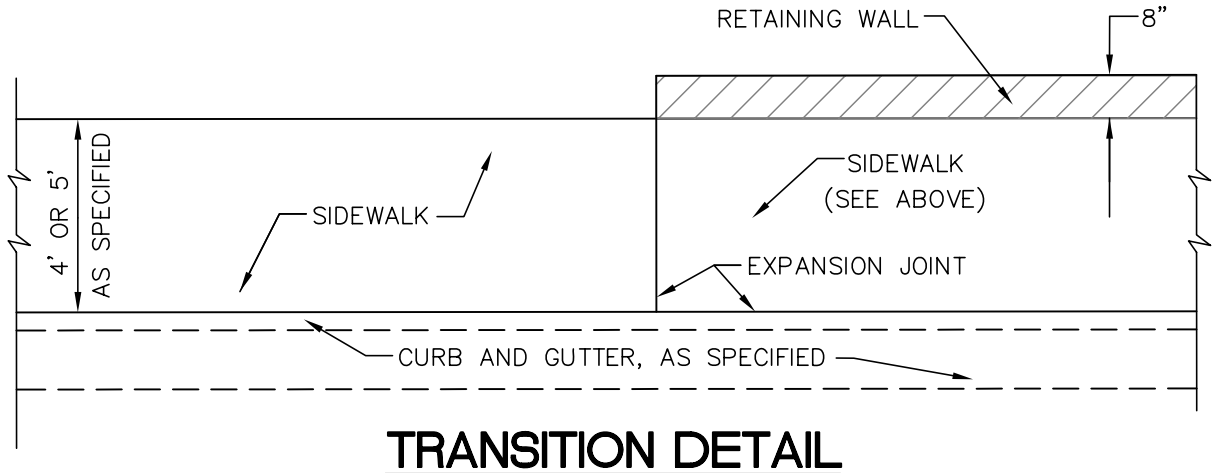

TRANSITION DETAIL
(PLAN VIEW)

NOTES:

1. STANDARD CURB AND GUTTER SECTION NOT INCLUDED IN UNIT BID PRICE FOR RETAINING WALL.
2. PLACE ONE CUBIC FOOT OF POROUS BACKFILL MATERIAL AROUND WEEP HOLE AS SHOWN.
3. PROVIDE 3/4" X 3/4" CHAMFERED CORNERS AT ALL OUTSIDE EDGES.

MUNICIPALITY OF ANCHORAGE	SCALE: NTS APPROVED: REVISED: 8/08	**SIDEWALK RETAINING WALL 6" TO 24"**	SECTION # 30.05 DETAIL # 30-14

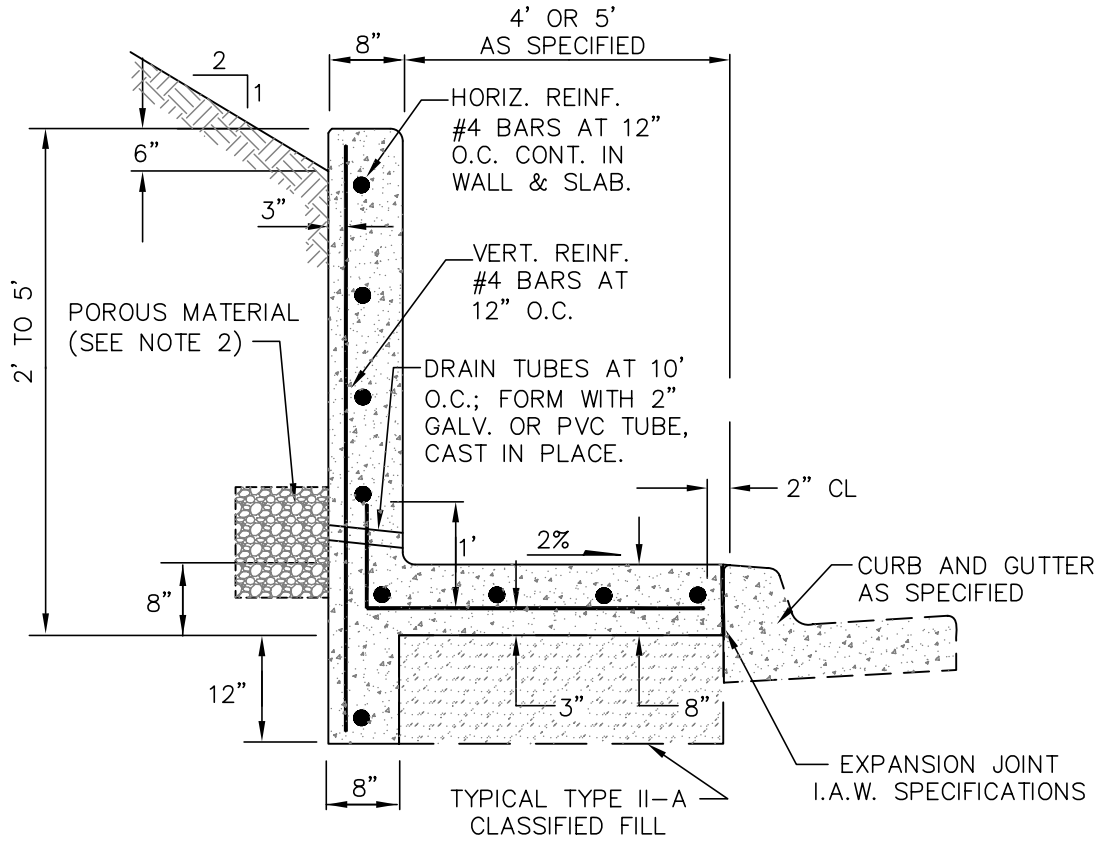

SIDEWALK RETAINING WALL

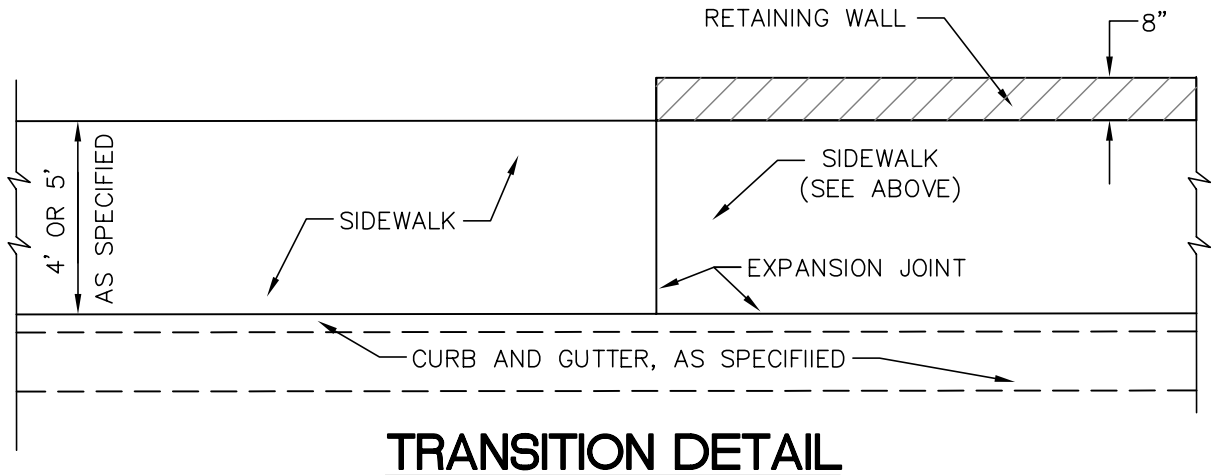

TRANSITION DETAIL
(PLAN VIEW)

NOTES:

1. STANDARD CURB AND GUTTER SECTION NOT INCLUDED IN UNIT BID PRICE FOR RETAINING WALL.
2. PLACE ONE CUBIC FOOT OF POROUS BACKFILL MATERIAL AROUND WEEP HOLE AS SHOWN.
3. PROVIDE 3/4" X 3/4" CHAMFERED CORNERS AT ALL OUTSIDE EDGES.

MUNICIPALITY OF ANCHORAGE	SCALE: NTS APPROVED: REVISED: 8/08	SIDEWALK RETAINING WALL 2' TO 5'	SECTION # 30.05 DETAIL # 30-15

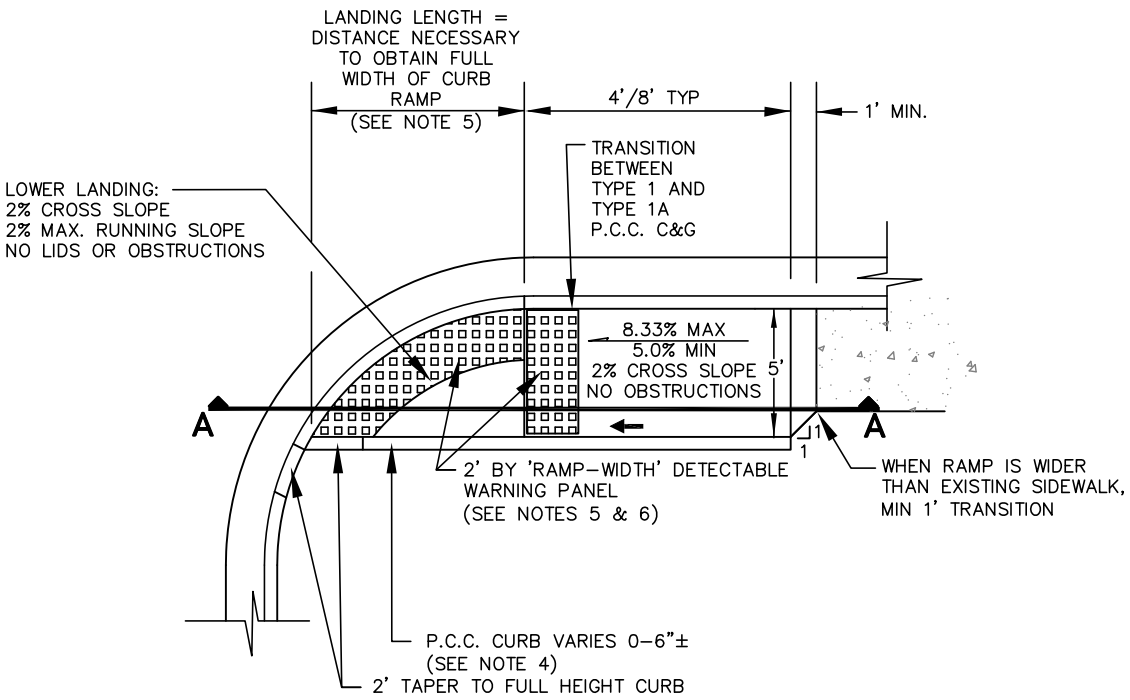

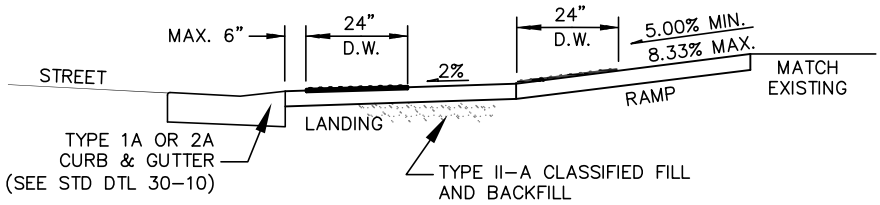

SECTION AA

UNIDIRECTIONAL NOTES:

1. CONSTRUCT UNIDIRECTIONAL RAMPS AND LANDINGS WITH A BROOM FINISH PERPENDICULAR TO THE LONG DIRECTION OF THE RAMP.
2. CONTRACTOR SHALL CONSTRUCT THE RAMP PORTION OF THE CURB RAMP WITH A 2% CROSS SLOPE WITH NO MANHOLES, UTILITY JUNCTION BOXES, OR OTHER OBSTRUCTIONS. THE RUNNING SLOPE IS 5% MINIMUM AND 8.33% MAXIMUM, BUT SHALL NOT REQUIRE THE RAMP LENGTH TO EXCEED 15 FEET.
3. CONTRACTOR SHALL CONSTRUCT LANDINGS WITH A MAXIMUM 2% RUNNING SLOPE AND 2% CROSS SLOPE.
4. CONTRACTOR SHALL CONSTRUCT P.C.C. CURB BEHIND LANDING AND RAMPS WHERE SHOWN OR AS DIRECTED BY THE ENGINEER. P.C.C. CURB IS INCIDENTAL TO CURB RAMP AND NO ADDITIONAL PAYMENT WILL BE MADE.
5. IF LANDING LENGTH IS LESS THAN 5', CONTRACTOR SHALL INSTALL DETECTABLE WARNINGS AT THE BOTTOM OF THE RAMP. IF THE LANDING LENGTH IS EQUAL TO OR GREATER THAN 5', CONTRACTOR SHALL INSTALL RADIAL DETECTABLE WARNING ALONG TOP BACK OF CURB FOR THE WIDTH OF THE LANDING. ONLY ONE OF THE DETECTABLE WARNING CONFIGURATIONS SHOWN WILL BE CONSTRUCTED.
6. CONTRACTOR SHALL INSTALL 24 INCH DETECTABLE WARNINGS I.A.W. MANUFACTURERS' RECOMMENDATIONS AND THE DRAWINGS. DETECTABLE WARNINGS SHALL BE INSTALLED IAW MANUFACTURERS RECOMMENDATIONS AND ALIGNED SUCH THAT THE TRUNCATED DOMES ARE IN LINE WITH THE DIRECTION OF TRAVEL. D.W. SHALL EXTEND THE FULL WIDTH OF THE LANDING. INSTALL D.W. SO THAT THE FIELD AREA AT THE BASE OF THE DOMES IS FLUSH WITH THE SURROUNDING CONCRETE. ALLOW NO LIPS AT EDGE OF THE D.W. OR FLOW LINE. D.W. SHALL BE FEDERAL YELLOW, OR APPROVED EQUAL. WHERE MANUFACTURED RADIAL D.W. ARE NOT AVAILABLE, CONTRACTOR SHALL CUT D.W. I.A.W. MANUFACTURER'S RECOMMENDATIONS TO PROVIDE RADIAL D.W. AS SHOWN ON THE DRAWINGS.

REVISION: 3/13 NEW DETAIL

MUNICIPALITY OF ANCHORAGE	SCALE: NTS APPROVED: REVISED: 3/13	**UNIDIRECTIONAL CURB RAMP**	SECTION # 30.04 DETAIL # 30-16

MUNICIPALITY OF ANCHORAGE
STANDARD SPECIFICATIONS

DIVISION 40
ASPHALT SURFACING

STANDARD CONSTRUCTION SPECIFICATIONS
FOR ASPHALT SURFACING
DIVISION 40
INDEX

SECTION 40.01	GENERAL	1
Article 1.1	Scope of Work	1
Article 1.2	Applicable Standards	1
Article 1.3	Subsurface Investigation	3
Article 1.4	Materials and Inspection	3
Article 1.5	Stripping Test for Aggregates	3
Article 1.6	Payment - General	3
SECTION 40.02	SEAL COAT	4
Article 2.1	Description	4
Article 2.2	Asphalt	4
Article 2.3	Cover Aggregate	4
Article 2.4	Equipment	5
Article 2.5	Construction	6
Article 2.6	Measurement	7
Article 2.7	Basis of Payment	8
SECTION 40.03	PRIME COAT	9
Article 3.1	Description	9
Article 3.2	Materials	9
Article 3.3	Construction	9
Article 3.4	Application of Bituminous Material	9
Article 3.5	Application of Blotter Material	10
Article 3.6	Measurement	10
Article 3.7	Basis of Payment	10
SECTION 40.04	TACK COAT	11
Article 4.1	Description	11
Article 4.2	Material	11
Article 4.3	Equipment	11
Article 4.4	Construction	12
Article 4.5	Measurement	13
Article 4.6	Basis of Payment	13
SECTION 40.05	CRACK AND JOINT SEALANT	14
Article 5.1	General	14
Article 5.2	Materials	14
Article 5.3	Construction	15
Article 5.4	Measurement	16
Article 5.5	Basis of Payment	16

SECTION 40.06 ASPHALT CONCRETE PAVEMENT 17
Article 6.1 Description 17
Article 6.2 Material and Testing 17
Article 6.3 Composition of Mixes 19
Article 6.4 Equipment 22
Article 6.5 Construction 26
Article 6.6 Density and Surface Requirements 33
Article 6.7 Measurement 34
Article 6.8 Basis of Payment 35

SECTION 40.07 STONE MASTIC ASPHALT CONCRETE PAVEMENT 36
Article 7.1 General 36
Article 7.2 Material and Testing 36
Article 7.3 Composition of Mixes 37
Article 7.4 Equipment 43
Article 7.5 Construction 45
Article 7.6 Density and Surface Requirements 51
Article 7.7 Measurement 51
Article 7.8 Basis of Payment 52

SECTION 40.08 RECYCLED ASPHALT PAVING (RAP) 53
Article 8.1 General 53
Article 8.2 Material 53
Article 8.3 Construction 54
Article 8.4 Measurement 55
Article 8.5 Basis of Payment 56

SECTION 40.09 BITUMINOUS SURFACE TREATMENT 57
Article 9.1 Description 57
Article 9.2 Asphalt 57
Article 9.3 Aggregates 57
Article 9.4 Equipment 58
Article 9.5 Construction 59
Article 9.6 Measurement 60
Article 9.7 Basis of Payment 61

SECTION 40.10 PAVEMENT ROTOMILLING 62
Article 10.1 General 62
Article 10.2 Construction 62
Article 10.3 Measurement 62
Article 10.4 Basis of Payment 62

SECTION 40.11 REMOVE AND REPLACE ASPHALT SURFACING 63
Article 11.1 Description 63
Article 11.2 Materials 63
Article 11.3 Construction 63
Article 11.4 Measurement 64
Article 11.5 Basis of Payment 64

SECTION 40.12 IN-PLACE FULL DEPTH RECLAMATION OF ASPHALT CONCRETE PAVEMENT AND LEVELING COURSE 65
Article 12.1 General 65
Article 12.2 Material 65
Article 12.3 Construction 65
Article 12.4 Measurement 66
Article 12.5 Basis of Payment 66

SECTION 40.13 PAVEMENT SEAM REPAIR-INFRARED METHOD 67
Article 13.1 General 67
Article 13.2 Materials 67
Article 13.3 Equipment 67
Article 13.4 Construction 67
Article 13.5 Measurement 68
Article 13.6 Basis of Payment 68

STANDARD CONSTRUCTION SPECIFICATIONS
FOR ASPHALT SURFACING
DIVISION 40

SECTION 40.01 GENERAL

Article 1.1 Scope of Work

The Work covered by these Specifications consists of providing all plant, labor, equipment supplies, material, transportation, handling, and storage, and performing all operations necessary to complete the construction of hot mix asphalt concrete pavement consisting of one or more courses on a previously prepared base, seal coat of asphalt cement and cover aggregate, and bituminous surface treatment in single or multiple courses.

Article 1.2 Applicable Standards

The latest revision of the following standards: American Society for Testing and Materials (ASTM), American Association of State Highway and Transportation Officials (AASHTO), and State of Alaska Department of Transportation and Public Facilities, Alaska Test Methods and Standard Practices (ATM) are hereby made a part of these Specifications. Additionally, the Western Alliance for Quality Transportation Construction (WAQTC) Test Methods and Procedures are hereby incorporated into these Specifications. The test designations listed below are those that are currently specified for use in this Division.

ADOT&PF Alaska Test Method 312	Nordic Abrasion
ASTM C-29	Test for Unit Weight of Aggregate
ASTM C-88	Test for Soundness of Aggregates by Use of Sodium Sulfate or Magnesium Sulfate
ASTM C-117	Test for Materials Finer than No. 200 Sieve in Mineral Aggregates
ASTM C-127	Test for Specific Gravity and Absorption of Coarse Aggregate
ASTM C-128	Test for Specific Gravity and Absorption of Fine Aggregate
ASTM C-131	Test for Resistance to Abrasion of Small Size Coarse Aggregate by Use of Los Angeles Abrasion Machine Test for Sieve or Screen Analysis of Fine and Coarse Aggregate
ASTM C-183	Sampling Hydraulic Cement
ASTM D-75	Sampling Stone, Slag, Gravel, Sand and Stone Block for Use as Highway Materials
ASTM D-140	Sampling Bituminous Materials
ASTM D-242	Specification for Mineral Filler for Bituminous Paving Mixtures
ASTM D-4125	Standard Test Method for Asphalt Content of Bituminous Mixtures by

	Nuclear Method
ASTM D-4791	Flat and Elongated Particles
ASTM D-5821	Percent Fracture
AASHTO M-29	Fine Aggregate for Bituminous Paving Mix
AASHTO M-43	Standard Size of Coarse Aggregate for Highway Construction
AASHTO M-156	Requirements for Mixing Plants for Hot-Mixed, Hot-Laid Bituminous Paving Mixtures.
AASHTO M-208	Specification for Cationic Emulsified Asphalt
AASHTO M-226	Viscosity Graded Asphalt Cement - Table Three (3)
AASHTO M-320	Standard Specifications for Performance-Graded Asphalt Binder
AASHTO T-30	Test for Mechanical Analysis of Extracted Aggregate
AASHTO T-43	Test for Specific Gravity of Bituminous Materials
AASHTO T-85	Specific Gravity and Absorption of Coarse Aggregate
AASHTO T-180-D	Test for Moisture-Density Relations of Soils
AASHTO T-102	Spot Test of Asphaltic Materials
AASHTO T-164	Test for Quantitative Extraction of Bitumen*
AASHTO T-195	Test for Coated Particles for Bituminous Mixtures
AASHTO T-168	Sampling Bituminous Paving Mixtures
AASHTO T-304	Uncompacted Void Content of Fine Aggregate (Fine Aggregate Angularity)
AASHTO T-308	Determining the Asphalt Content of Hot Mix Asphalt (HMA) by Ignition Method
AASHTO T-209	Theoretical Maximum Specific Gravity and Density of Bituminous Paving Mixtures
AASHTO T-166	Bulk Specific Gravity of Compacted Bituminous Mixtures Using Saturated Surface Dry Specimens
AASHTO T-275	Bulk Specific Gravity of Compacted Bituminous Mixtures Using Paraffin-Coated Specimens

* In lieu of the specified methods, the Engineer may permit the use of a nuclear asphalt gauge.

The following standards of The Asphalt Institute are also a part of these Specifications:

Construction Specifications for Asphalt Concrete, by The Asphalt Institute.

Mix Design Methods for Asphalt Concrete, by The Asphalt Institute.

The number of blows of the Compaction hammer used in the Marshall Mix Design will be fifty (50) blows per side of specimen.

Article 1.3 Subsurface Investigation

Information pertaining to subsurface exploration, boring, test pit locations, and other preliminary investigation may appear in the Contract Documents, or be available at selected locations for review by the Bidder. While such data will have been collected with reasonable care, there is not expressed or implied guarantee that conditions so indicated are exact or entirely representative of those actually existing. The Bidder shall make his or her own interpretation of results of such investigations and satisfy himself as to the conditions to be encountered.

Article 1.4 Materials and Inspection

Representative samples of all materials proposed for use under these Specifications shall be submitted to the Engineer for testing. The Contractor shall submit these materials at his own expense. Material shall not be used until it has been approved by the Engineer.

For verification of weights and measures, character of materials, and determination of temperatures used in the preparation of the paving mixes, the Engineer or his authorized representative shall at all times have access to all portions of the paving plant, aggregate plant, storage yards, and other facilities for producing and processing the material construction.

Article 1.5 Stripping Test for Aggregates

The use and proportions of antistrip agents shall be determined by ATM T-14 and be included in job mix design. At least seventy percent (70%) of the aggregate shall remain coated when tested in accordance with ATM T-14.

Article 1.6 Payment - General

Payment for all Work included in this Division shall be paid for in accordance with Division 10, Section 10.07 - Measurement and Payment, and shall include full payment for all Work described.

SECTION 40.02 SEAL COAT

Article 2.1 Description

The Work under this Section consists of the performance of all Work required for the construction of a seal coat of asphalt cement and cover aggregate on RAP, strip-paved, and gravel surfaces.

Article 2.2 Asphalt

The Contractor shall submit a certified analysis of the proposed asphalt from the refinery laboratory to the Engineer for review and approval. A copy of the certified analysis shall accompany each shipment of asphalt to the Project. The Engineer shall reserve the right to make check tests of the asphalt received on the Project site, and if the asphalt is not in accordance with the certified analysis, he may reject the material.

The asphalt required by these Specifications shall conform to the requirements of The Asphalt Institute for the type and grade shown below:

Asphalt for Seal Coating	CRS-2 or CRS-2P

Article 2.3 Cover Aggregate

A. General

Cover aggregate shall consist of crushed gravel and shall be sound, durable, free of adherent coatings of clay, dirt or any other objectionable matter, and shall have a percentage of wear not to exceed forty (40) after five hundred (500) revolutions, as determined by ASTM C-131. Fractured Face Count shall conform to Section 40.06, Article 6.2 - Material and Testing. The cover aggregate shall have the following gradation:

Sieve Size	Percentage Passing Sieve
1/2"	100
3/8”	90-100
#4	10-30
#8	0-8
#200	0-1

B. Stripping Test for Aggregates

Cover aggregate shall show no detrimental amount of stripping when tested as described in Section 40.01, Article 1.5 - Stripping Tests for Aggregates.

Regardless of the test results, a "non-stripping" additive shall be added to the asphalt in the amount of one-half percent (0.5%) by weight of the asphalt. Such additive material shall be of quality and grade acceptable to the Engineer.

Article 2.4 Equipment

A. General

All equipment used on this Work shall be of sufficient size and in such mechanical condition as to meet the requirements and to produce the Work to the specified quality.

B. Pressure Distributor

The bitumen distributor shall be pneumatic-tired, self-propelled, and shall have a capacity of not less than eight hundred (800) gallons. It shall be equipped with an independently-operated bitumen pump, tachometer, pressure gauges, volume metering devices, a thermometer for reading the tank temperature, and a hose attachment suitable for applying the bituminous material to spots unavoidably missed by the distributor. The independently-operated bitumen pump shall be equipped with a tachometer calibrated in revolutions per minute. The distributor shall also be equipped to agitate and circulate the bituminous material during the heating process. Spray bars shall be the circulating type with extensions, available for distributing width from eight to twenty-one feet (8’ to 21’) by one foot (1’) increments.

The nozzle shall give uniform distribution and the shutoff shall be quick and positive to prevent dripping. The distributor shall be designed and equipped to distribute the bituminous material uniformly at consistent surface speeds, at uniform temperatures with various surface widths, at known and maintained rates of five hundredth (0.05) to two (2.0) gallons per square yard within a tolerance of five (5) percent, and through pressure ranges from twenty-five (25) to seventy-five (75) pounds per square inch. Air pressure type equipment may be used only upon written approval from the Engineer.

C. Cover Aggregate Spreader

The spreader shall be self-propelled and capable of spreading the cover material uniformly for widths of eight to sixteen feet (8’ to 16’) in one foot (1’) increments, and adjustable to spread uniform layers of ten (10) to thirty (30) pounds per square yard. Revolving plate type chip spreaders will not be approved.

D. Rollers

Rollers shall be self-propelled, pneumatic-tired, weighing not less than five (5) tons and not more than eight (8) tons. Rolling shall follow closely on spreading of aggregate.

E. Hauling Equipment

The cover aggregate shall be transported from the plant to the site in trucks having tight, clean and smooth beds.

F. Miscellaneous Equipment

A power broom and all necessary hand tools thermometers, etc. shall be provided by the Contractor.

Article 2.5 Construction

A. Surface Preparation

The existing surface shall be swept clean of all dust, dirt, and other loose material with hand brooms or through the use of approved mechanical sweepers. Where existing dust and dirt cannot be satisfactorily removed by brooming, it may be necessary to flush the asphalt surface with water. If flushing is necessary, the Contractor shall furnish the necessary equipment for flushing.

B. Weather Limitations

Bituminous material shall not be placed during rainy or threatening weather, or when the moisture on the surface to be treated would prevent satisfactory bond, or when the air temperature is less than fifty degrees (50º) Fahrenheit, except by approval of the Engineer.

C. Heating and Application of Bituminous Material

The bituminous material shall be heated in such a manner as to insure even heating of the entire mass with an efficient and positive control at all times. It shall be applied at a temperature between one hundred thirty (130) and one hundred eighty degrees (180º) Fahrenheit. Necessary thermometers shall be supplied so that the temperature may be observed at all times.

The bituminous material for the surface coat shall be uniformly applied by means of a pressure distributor at the ratio of four-tenths (0.40) to fifty-five hundredths (0.55) gallons per square yard with forty-five hundredths (0.45) gallons per square yard desired. The quantity of material as measured by the volume measuring device of the distributor shall not vary from the true quantity, as herein specified, by more than five percent (5%). A strip of building paper or other suitable covering shall be used at the beginning and/or end of the spread to provide a positive cutoff at the desired limits.

Existing improvements such as curb and gutter, steps and buildings shall be protected to prevent contact with bituminous material.

D. Preparation and Application of Cover Aggregate

Cover material shall be sufficiently dried when it comes in contact with bituminous material that a satisfactory bond or coating is obtained. The moisture content shall not exceed two percent (2%) by weight.

Immediately following the application of the bituminous material, the aggregate cover material shall be uniformly spread over the surface with an approved mechanical spreader at a rate of twenty-two (22) to thirty (30) pounds per square yard. The cover material shall be applied continuously and without delay until the asphalt application is covered.

Whenever possible, successive strips shall be applied before the previous strip has cooled. Cover material shall not be spread on the six inches (6”) adjacent to an unprotected edge until the next strip of bituminous material has been applied. Rolling shall immediately follow the application of the cover material. The roller shall be pneumatic-tired and of such a weight that it does not crush the cover material.

Rolling shall continue only long enough to "set" the cover material in the bituminous material. Under no circumstances will the rolling continue until the cover material is crushed or pulverized. If the cover material is distributed or thrown off the surface by traffic, it shall be broomed back into place. Areas with a deficiency or excess of cover material shall be corrected.

E. Maintenance of Surface

After application of the cover material, the surface shall be maintained by the Contractor for two to five (2-5) days, depending on the weather. During this period the Contractor shall, at least once daily, redistribute the cover material that has become displaced by traffic, by means of brooms, a drag or other method satisfactory to the Engineer. When all possible material has been imbedded in the bituminous material to the satisfaction of the Engineer, the Contractor shall sweep the pavement surface of all excess material and remove it to the storage yard as designated, unless otherwise directed by the Engineer.

Article 2.6 Measurement

Bituminous material and cover aggregate shall be measured by weight in tons (2,000 lbs).

Legible weight tickets shall be submitted to the Engineer for all bituminous material and cover aggregate delivered to the Project site for use in the Work. All weight tickets shall contain, at a minimum, the following information:

1. Weight ticket serial number;
2. Vehicle identification number;
3. The date and time the load was weighed;

4. The tare weight of the vehicle;
5. The gross weight of the loaded vehicle, as registered on the scale; and
6. The legal gross weight of the vehicle, as permitted by Anchorage Municipal Code Sections 9.46.090 or 9.46.100.

The Owner shall not pay for that portion of any load in excess of the legal gross weight for the vehicle.

Article 2.7 Basis of Payment

Payment for this Work shall be in accordance with Division 10, Section 10.07 - Measurement and Payment, and shall include full payment for all Work described in this Section.

Payment shall be made under the following units:

ITEM	UNIT
Asphalt for Seal Coat	Ton
Cover Aggregate	Ton

SECTION 40.03 PRIME COAT

Article 3.1 Description

This Work under this Section consists of the performance of all Work required for preparing and treating the base course with bituminous material, and blotter material, in conformity with the required lines.

Article 3.2 Materials

The prime coat shall be MC-30 or approved equal. The aggregate for blotter material shall conform to the gradation requirements of AASHTO M-43, Size No. 10. The aggregate shall be free from organic or other deleterious material.

Article 3.3 Construction

Weather Limitations: Bituminous material shall not be applied on a wet or frozen surface, or when the air temperature is below forty-five degrees (45º) Fahrenheit, or when weather conditions would prevent the proper construction of the prime coat.

Article 3.4 Application of Bituminous Material

The distributor shall be so designed, equipped, maintained and operated that bituminous material at even heat may be applied uniformly on variable widths of surface up to fifteen feet (15') at readily determined and controlled rates from five hundredths (0.05) to two (2.0) gallons per square yard, with uniform pressure and with an allowable variation from any specified rate not to exceed two hundredths (0.02) gallon per square yard. Distributor equipment shall include a tachometer, pressure gauges, accurate volume measuring devices or a calibrated tank, and a thermometer for measuring temperatures of tank contents. Distributors shall be equipped with a power unit for the pump, and full circulation spray bars adjustable laterally and vertically.

Traveling or stationary mixing plants, or other equipment of proven performance, may be used by the Contractor in lieu of the specified equipment if approved.

Bituminous material shall be applied to the width of the section to be primed by means of a pressure distributor in a uniform, continuous spread. When traffic is maintained, not more than half (1/2) of the width of the section shall be treated in one application. Care shall be taken that the application of bituminous material deficiencies shall be corrected. Building paper shall be placed over the end of the previous applications and the joining application shall start on the building paper. Building paper used shall be removed and satisfactorily disposed of.

When traffic is maintained, one-way traffic shall be permitted on the untreated portion of the roadbed. As soon as the bituminous material has been absorbed by the surface and will not pick up, traffic shall be transferred to the treated portion and the remaining width of the section shall be primed.

The quantities, rate of application, temperatures and areas to be treated shall be approved before application of the prime coat.

Article 3.5 Application of Blotter Material

If, after the application of the prime coat, the bituminous material fails to penetrate within the time specified and the roadway must be used by traffic, blotter material shall be spread in the amounts required to absorb any excess bituminous material. Blotter material will be used only at the direction of the Engineer.

Article 3.6 Measurement

Bituminous material will be measured by the ton and blotter material will be considered incidental to the asphalt used as prime coat.

Article 3.7 Basis of Payment

Payment for this Work shall be in accordance with Division 10, Section 10.07 - Measurement and Payment, and shall include full payment for all Work described in this Section.

Payment shall be made under the following units:

ITEM	UNIT
Asphalt Prime Coat	Ton

SECTION 40.04 TACK COAT

Article 4.1 Description

The Work under this Section shall consist of performing all Work required for the application of bituminous material to an existing asphalt base or bituminous binder to provide bond for a superimposed asphalt wearing surface.

Article 4.2 Material

The Contractor shall submit a certified analysis from the refinery laboratory to the Engineer for review and approval. A copy of the certified analysis shall accompany each shipment of the asphalt received on the Project site, and if the asphalt is not in accordance with the certified analysis, he may reject the material. The asphalt required by these Specifications shall conform to the latest Asphalt Institute Specifications for the type and grade shown below:

Asphalt for Tack Coat	STE-1 {Snap-Tack} or equal

Article 4.3 Equipment

A. General

All equipment used on this Work shall be of sufficient size and in such mechanical condition as to meet the requirements and to produce the Work to the specified quality.

B. Pressure Distributor

The bitumen distributor shall have pneumatic tires of such width and number that the load produced on the binder course shall not exceed six hundred fifty (650) pounds per inch of tire width, and shall be so designed, equipped, maintained and operated that bituminous material at even heat may be applied uniformly on variable widths of surface at readily determined and controlled rates per square yards, with a pressure range of from twenty-five (25) to seventy- five (75) pounds per square inch, and with an allowable variation from the specified rate not to exceed five percent (5%). Distributor equipment shall include a tachometer, pressure gauges, volume measuring devices, and a thermometer for reading temperatures of tank contents.

Contractor shall be required to lay a test strip of not less than fifteen feet (15') in length to demonstrate that the equipment is working. Location of the test strip will be on-site, as approved by the Engineer. Street closures required for testing of equipment will be the responsibility of the Contractor prior to testing.

Notification of testing will be made to the Engineer not less than 24 hours prior to making the test strip to allow the inspector and materials analysis personnel to be

present. Engineer may require reasonable adjustments to the distribution rate to meet the required or desired cured thickness.

All equipment shall meet federal and State of Alaska safety standards. The Engineer and Contractor will inspect equipment jointly. Contractor shall immediately repair or replace defective or non-working pumps, gauges, or spray bar parts.

Contractor shall re-test test strips that fail due to equipment failure or inexperienced personnel operating the equipment will be re-tested. Engineer may require additional tests that he feels is needed to verify that the equipment meets the requirements of these specifications and the Contractor has qualified personnel and supervision to complete this Work.

Supplying the application of tack coat test strips is incidental to the bid item "Tack Coat" and no separate payment shall be made.

C. Miscellaneous Equipment

A power broom equipped with blower and all necessary hand tools, thermometers, etc., shall be provided by the Contractor.

Article 4.4 Construction

A. Surface Preparations

Immediately before applying the tack coat, if the surface is sufficiently bonded, the full width of surface to be treated shall be swept with a power broom equipped with a blower, supplemented by hand brooms, washed down with water, or otherwise cleaned to remove all loose dirt, clay, or other loose and objectionable material.

After the operation of removing dust has been completed and prior to the application of the tack coat, the Engineer shall make an inspection of the existing pavement to determine its fitness to receive the bituminous material.

B. Weather Limitations

Tack coat shall not be applied during cold weather, after sunset, or to a wet surface. The tack coat shall be applied only when the temperature of the atmosphere is above sixty degrees (60º) Fahrenheit.

C. Heating and Application of Bituminous Material

The application of the bituminous tack material shall be made by means of a pressure distributor of approved type, and shall be in the following amounts. Contractor shall distribute undiluted amounts of bituminous material (STE-1 {Snap-Tack} or equal) so that the mixture will cure back to 0.05 to 0.10 gallons per square yard. The quality of material as measured by the volume measuring device of the distributor shall not vary from the true quantity, as herein specified, by more than

five percent (5%). The bituminous material shall be applied at a temperature between seventy-five and one hundred thirty degrees (75º and 130º) Fahrenheit. Necessary thermometers shall be supplied so that the temperature may be observed at all times.

Existing improvements such as keyboxes, manholes, cleanouts, monuments, curb and gutter, steps, and buildings shall be protected to prevent contact with bituminous material to the satisfaction of the Engineer. The surface shall be allowed to dry until it is a proper condition of tackiness to receive the AC surface course placement as is necessary to obtain this proper condition of tackiness. Until the wearing surface course is placed, the Contractor shall protect the tack coat from damage.

Article 4.5 Measurement

Bituminous material will be measured by weight in tons (2000 lbs).

Article 4.6 Basis of Payment

Payment for this Work shall be in accordance with Division 10, Section 10.07 - Measurement and Payment, and shall include full payment for all Work described in this Section.

Payment shall be made under the following units:

ITEM	UNIT
Asphalt Tack Coat	Ton

SECTION 40.05 CRACK AND JOINT SEALANT

Article 5.1 General

The Work under this Section shall consist of the performance of all plant, labor and supervision, equipment, and material for performing all operations required for the preparation and application of a hot bituminous emulsion and three-eighths inch (3/8") chip applied as a crack and joint sealant. The Work under this Section shall be performed after the asphalt pavement has been rotomilled or as directed by the Engineer.

Article 5.2 Materials

Asphalt materials shall be approved by the Engineer prior to use (a certified analysis by the refinery laboratory with each shipment of asphalt to the project may be acceptable). The Engineer shall reserve the right to make check tests of the asphalt received on the job and if the certified analysis proves to be unsatisfactory individual check tests will be required.

The asphalt required by these specifications shall conform to the requirements of the Asphalt Institute for the type and grade shown below:

Asphalt for Bituminous Emulsion Crack Sealant	STE-1{Snap-Tack} or approved equal

The aggregate shall consist of crushed gravel (three-eighths inch (3/8") minus and sand) evenly mixed and shall be sound, durable, and free of adherent coatings of clay, dirt, or any other objectionable matter. Not less than sixty percent (60%) by weight of crushed gravel shall consist of pieces having two or more faces being freshly fractured.

The aggregate shall have the following gradation:

Sieve Designation	Percentage By Weight Passing
3/8"	100
#4	85-100
#8	0-25
#200	0-2

All aggregate equipment shall meet federal and State of Alaska safety standards and shall be sufficient in size and mechanical condition to meet the requirements and to produce the Work. The equipment will be inspected jointly by the Municipality and the Contractor and shall be approved by the Engineer before any Work is started. Any units found defective shall be immediately repaired or replaced before starting Work on this project. The Contractor shall notify the Engineer twenty-four (24) hours in advance for equipment inspection.

The bitumen distributor shall have pneumatic-tires and be self-propelled and shall have a capacity of not less than 400 gallons. It shall be equipped to agitate and circulate the bituminous material during heating, with an independently-operated bitumen pump, tachometer, pressure gauges, volume metering devices, tank thermometer, and a hand held pressurized spray bar with a single nozzle equipped with a quick and positive shut-off to prevent dripping or over-spraying.

Rollers shall be self-propelled, have pneumatic-tires, and weigh not less than five tons or more than eight tons.

The Contractor shall provide a power broom and all necessary hand tools, thermometers, etc., at no additional cost to the Municipality.

Article 5.3 Construction

Crack and joint sealant shall be applied to cracks or joints that have dimensions between three-eighths inch (3/8") and three-quarter inch (3/4") in width as directed by the Engineer. The sealant shall be applied in conformance with the manufacturer's instructions and to full depth of the crack. Cracks less than three-eighths inch (3/8") in width will be filled with sealant (STE-1).

The cracks shall be cleaned and all loose material shall be blown out to the full depth of the crack. The interior of the crack shall be completely dried and existing asphalt surfaces shall be exposed to enable bonding of the sealant.

All cracks shall have a minimum depth of one inch (1"). If the crack does not have a minimum depth of one inch (1"), the crack shall be deepened to a minimum of one inch (1") through the use of a router or similar device approved by the Engineer. The area covered with the emulsion/aggregate treatment shall be a minimum of six inches (6") on either side of the crack.

Crack and joint sealant shall be prepared and applied in conformance with the manufacturer's instructions. All extruded sealant shall be removed and feathered to transition to the existing pavement surface.

Crack sealant shall <u>not</u> be applied during cold weather, after sunset, or when the surface and crack are wet. The crack sealant shall be applied only when the temperature of the atmosphere is above sixty degrees (60º) Fahrenheit.

The application of the bituminous material shall be made by means of a pressure distributor of approved type. Undiluted amounts of bituminous material (STE-1) shall be distributed at the rate two-tenths to thirty-five hundredths (0.20 to 0.35) gallons per square yard. The quality of material as measured by the volume-measuring device shall not vary from the true quantity, as herein specified, by more than five percent (5%). The bituminous material shall be applied at a temperature between one hundred and twenty-five and one hundred and eighty-five degrees (125º and 185º) Fahrenheit.

The hot bituminous emulsion shall be applied with a hand held spray bar, with a nozzle pressure range from twenty (20) pounds per square inch (psi) to forty-five (45) pounds per square inch (psi), to distribute the bituminous material uniformly to the full depth of the crack without filling it.

Aggregate distribution shall follow the emulsion applications closely as possible. It shall be placed prior to the emulsion breaking to ensure the greatest adherence.

The loose aggregate shall be removed and all crack repairs shall be broomed and cleaned before the asphalt overlay is installed.

For wide cracks or other openings in the existing asphalt surface, which in the opinion of the Engineer are too large for crack sealing, the Engineer shall direct the Contractor to remove and replace pavement in accordance with Section 40.11 - Remove and Replace Existing Asphalt Surfacing or place an A.C. wedge course in accordance with Section 40.06 - Asphalt Concrete Pavement.

The crack and joint sealant must be in place a minimum of twenty-four (24) hours and approved by the Engineer prior to an application of the tack coat or overlay will be allowed.

Article 5.4 Measurement

The application of crack and joint sealant shall be measured per linear foot of sealant applied as directed. Application of aggregate shall be incidental to bid item “Crack and Joint Sealant” and no separate payment shall be made.

Article 5.5 Basis of Payment

Payment for this Work shall be in accordance with Division 10, Section 10.07 - Measurement and Payment, and shall include full payment for all Work described in this Section.

Payment shall be made under the following unit:

ITEM	UNIT
Crack and Joint Sealant	Linear Foot

SECTION 40.06 ASPHALT CONCRETE PAVEMENT

Article 6.1 Description

The Work under this Section consists of the performance of all Work required for the construction of asphalt concrete pavement on a prepared base.

Article 6.2 Material and Testing

A. Asphalt:

The Contractor shall submit a certified analysis of the asphalt from the refinery laboratory to the Engineer for review and approval. A copy of the certified analysis shall accompany each shipment of asphalt to the asphalt mixing plant. The Engineer may make check acceptance tests of the asphalt binder, and, if the asphalt binder is not in accordance with the certified analysis, it shall be rejected.

1) For Class A asphalt concrete, the asphalt cement or binder required by this specification shall conform to the following AASHTO designations.

Meets AASHTO M-320 and the following:

Performance Grade of Asphalt binder	PG 64-28
Softening Point, minimum (AASHTO T-53)	125˚ F
Toughness, minimum (ASTM D-5801)	110 in-lbs
Tenacity, minimum (ASTM D-5801)	75 in-lbs

2) For other classes of asphalt concrete, the asphalt cement or binder required by these Specifications shall conform to the requirements of AASHTO M-320 and Certified Performance Grade Asphalt Binder PG 52-28.

B. Aggregates

1) Class A asphalt concrete

Coarse aggregate is all mineral retained on the No. 4 sieve.

The aggregate retained on the No. 4 sieve shall contain at least ninety percent (90%) by weight of particles having a minimum of two mechanically fractured surfaces.

Coarse Aggregate: Particles retained on the No. 4 sieve. Remove all natural fines passing the No. 4 sieve before crushing coarse aggregates for the asphalt concrete grading. The grain-size distribution for the asphalt concrete shall consist entirely of aggregate produced from an aggregate crushing process. Crush only aggregate that is free from clay conglomerates, vegetative matter or other deleterious material. Crush only

aggregate which consists of sound, tough, durable rock of uniform quality and is not coated with silt or clay. Aggregates shall meet the following requirements;

Property	Test Method	Requirement
Percent Sodium Sulfate Loss (5 cycles)	ASTM C-88	9% maximum
Percent Fracture (Two Surfaces)	ASTM D-5821	90% minimum
Flat & Elongated Particles	ASTM D-4791	
3 to 1	-----	15% max.
5 to 1	-----	5% max.
Nordic Abrasion	ADOT&PF Alaska Test Method 312	12% maximum
Absorption	AASHTO T-85	2% maximum

Fine Aggregate: Particles passing the No. 4 sieve. Remove all natural fines retained on the No. 4 sieve before crushing fine aggregate for the asphalt concrete grading. Crush only aggregate that is free from clay conglomerates, vegetative matter or other deleterious material and that consists of sound, tough, durable rock of uniform quality not coated with silt or clay.

The grain-size distribution for the asphalt concrete shall consist entirely of aggregate produced from an aggregate crushing process and be non-plastic as determined in accordance with AASHTO T-90 (Determining the Plastic Limit and Plasticity Index of Soils). Meet the quality requirements of AASHTO M-29, including S1.1, Sulfate Soundness and the following:

Property	Test Method	Requirement
Uncompacted Void Content of Fine Aggregate (Fine Aggregate Angularity)	AASHTO T-304	45% minimum

2) Class D and E asphalt concrete

Coarse aggregate for Class D and E asphalt concrete is all mineral retained on the No. 4 sieve. The aggregate retained on a No. 4 sieve shall contain at least eighty percent (80%) by weight of crushed pieces having two or more mechanically fractured surfaces.

All coarse aggregate shall be free from coatings of clay, silt, or other objectionable matter and shall not contain clay balls or other aggregation of fine material. Coarse aggregate shall be tested for soundness in accordance with the requirements of ASTM C-88, or will have proven sound through adequate record of service.

When aggregate grading is such that the material will tend to segregate in stockpile or handling, it shall be supplied in 2 or more sizes. Each size of aggregate required to produce the combined graduation specified shall be placed in individual stockpile at the plant site and separated by bulkheads or other means. When it is necessary to blend 2 or more aggregate sizes, the blending shall be done through separate bins at the cold elevator feeders, and not in the stockpile.

Fine aggregate is composed of all mineral matter passing the No. 4 sieve. It shall consist of natural and/or manufactured material derived by crushing gravel.

The aggregate particles shall be clean, tough, durable, moderately sharp, and free from coating of clay, silt, or other objectionable matter and shall not contain clay balls or other aggregations of fine material. Fine aggregate shall be tested for soundness in accordance with the requirements of ASTM C-88, or shall have a satisfactory soundness record. When tested for soundness, the number of cycles shall be five (5), the solution shall be sodium sulphate; the maximum loss shall be nine percent (9%) by weight. Fine aggregates shall be maintained in individual stockpiles, suitably separated to prevent intermingling.

C. Mineral Filler

Mineral Filler shall conform to the requirements of ASTM D-242.

Article 6.3 Composition of Mixes

A. General Requirements

Paving mixtures prepared under these Specifications shall be composed of aggregate and paving asphalt within the limits set forth in the following table:

Asphalt paving mixtures prepared under these Specifications shall be composed of aggregate and asphalt cement within the limits set forth in the following table:

Percentages by Weight Passing Sieves

Wearing Course

Sieve Size	Class A	Class D	Class E
1”	-----	-----	-----
3/4"	100	-----	100
1/2"	68 – 82	100	78 – 96
3/8”	52 – 64	75 – 92	66 – 86
#4	36 – 46	50 – 68	46 – 66
#8	26 – 36	32 – 50	34 –52
#16	16 – 28	20 – 38	24 – 42
#30	10 – 20	14 – 30	16 – 32
#50	6 – 16	10 – 24	10 – 24
#100	4 – 12	7 – 16	7 – 16
#200	3 – 8	3 – 9	3 – 9
Asphalt Cement *	5.0 – 7.0	5.0 – 7.0	5.0 – 7.0

*By weight of total mix

Target values for the gradation of the Job Mix Design shall be within the Broad Band Limits depicted in the table above.

B. Additive Materials

A "non-stripping" additive shall be added to the asphalt in the amount determined by ATM T-414 or one-fourth percent (0.25%) by weight of the asphalt, if approved by the Engineer. Such additive material shall be of quality and grade acceptable to the Engineer.

C. Job Mix

The Contractor, at his expense, shall submit to the Engineer for approval, a job mix formula within the limits specified above, for each class of mix designated by the Contract. Within each mix design the Contractor shall provide correction factor ignition points generated in accordance with AASHTO T-308. The aggregate gradation of the job-mix formula, when plotted upon an aggregate grading chart, shall closely approximate the shape of average gradations for the limits specified. For that portion of the aggregate passing No. 4 sieve, gradings which range from at or near the maximum of one (1) sieve to at or near the minimum of the next sieve will not be permitted. The Engineer may require increased asphalt content up to

one-half percent (0.5%) above that indicated by Marshall Design Criteria. Upon requiring increased asphalt content, the lower limit of percent voids and the upper limit of percent voids filled shall be waived.

D. Maximum Permissible Variations

Tolerances to the approved Job Mix Formula shall not exceed the permissible variations presented in the following table. The Job Mix Formula band shall mean the approved Job Mix Formula plus-or-minus (±) the numeric values for the maximum permissible variations.

Maximum Permissible Variation

(Percent by Weight of Total Aggregate)

Sieve Size	Class A Asphalt	Class D & E Asphalt
3/8" and Larger	± 6.0	± 5.0
#4	± 5.0	± 5.0
#8	± 5.0	± 4.0
#s 16, 30 & 50	± 4.0	± 4.0
#100	± 3.0	± 3.0
#200	± 2.0	± 2.0
Asphalt	± 0.4	± 0.4

When these permissible variations are applied to the "Class A Asphalt Concrete" Job Mix formula, the broad band limits in Subsection A, above, may be exceeded only as follows:

1. The three-quarter inch (3/4") and No. 200 sieves shall not exceed the broad band limits in SubArticle 6.3.A - General Requirements;

2. All other sieves may exceed the broad band limits in SubArticle 6.3.A - General Requirements for the respective sieve sizes in the above table provided that the Job Mix Formula band is not exceeded.

When these permissible variations are applied to the "Class D or Class E Asphalt Concrete" Job Mix formulas, the individual sieve shall not exceed the Broad Band limits in SubArticle 6.3.A – General Requirements, above.

Maximum temperature shall not vary more than twenty-five degrees (25º) Fahrenheit from the approved Job Mix Formula design.

E. Test Methods

The job-mix shall be determined according to the Marshall Method, as set forth in The Asphalt Institute Manual series no. 2 (M5-2), Fourth Edition.

Upon compaction and testing of the job-mix specimens, the mixture shall conform to the aforementioned specifications within the following limits:

	Class A Asphalt	Class D & E Asphalt
Stability (Marshall) Pounds Minimum	1200	1200
Flow (Marshall) Maximum	8 to 16	8 to 16
Percent Voids	2.5 to 4.5	3 to 5
Percent Voids Filled with Asphalt	70 to 80	75 to 85

Article 6.4 Equipment

A. General

All equipment furnished by the Contractor shall be maintained in a sound mechanical condition. Equipment shall be serviced and lubricated away from the paving site; units that drip fuel, oil and/or grease shall be removed from the Project until such leakage is corrected to the satisfaction of the Engineer.

B. Asphalt Mixing Plant

All plants, used by the Contractor, shall be designed, coordinated and operated to produce a mix uniformly within the job- mix tolerances as listed herein and in accordance with AASHTO M-156. The plant may be either a weightbatch type or a volumetric proportioning, continuous/drum mixing type, provided the equipment has demonstrated that it is suitable for producing finished mixtures complying with the job-mix formula specified herein.

The plant shall be equipped with the necessary equipment for storing, handling, drying, heating and mixing the aggregate and asphalt. Satisfactory means shall be provided for aggregate and asphalt control as to quantity and temperature. Adequate safety measures shall be provided on stairs, gears, pulley, chains, sprockets, and all other dangerous moving parts.

Contractor shall calibrate the asphalt plant not more than thirty (30) days in advance of production and furnish copies of the data to the Engineer at least one day prior to asphalt concrete production. Aggregate and asphalt cement sampling locations meetings OSHA safety requirements shall be provided. Proportioning (batch) scales shall not be used for weighing material for payment. Weight scales used in conjunction with a storage silo may be used to weight the final product for payment, provided the scales are certified by the State of Alaska. The asphalt plant shall maintain a current Air Quality Permit issued by the State of Alaska.

C. Pavers

Asphalt pavers shall be self-propelled units provided with a heated vibratory screed. Grade and cross slope shall be controlled through the use of automatic grade and slope control devices. The paver screed control system shall be automatically actuated by the use of an erected string-line or a mobile string-line (ski) at least thirty feet (30') in length on the high side of the paver. Grade control shall be used on either (a) both the high and low sides, or (b) grade control on the high side and slope control on the low side.

The Contractor may request a waiver for the screed control system (string-line or ski) if he or she believes the paving grade poses an unreasonable obstacle in the form of extreme horizontal or vertical curves or unusual cul-de-sac and/or street configuration.

For trails, pavers shall be capable of placing the required thickness in one lift with a minimum paving width of five feet (5'), truck-towed spreader-type equipment will be permitted, providing the width and depth requirement can be met.

The paver shall be equipped with a receiving hopper having sufficient capacity for a uniform spreading operation. The hopper shall be equipped with a distribution system to place the asphalt concrete mixture uniformly in front of the screed without segregation and/or tearing.

The term "screed" includes any strike-off device operated by cutting, crowding, or other action which is effective on mixes at workable temperatures, without tearing, shoving, or gouging, and which produces a finished surface of an even and uniform texture. The screed shall be adjustable as to level and section and shall have provisions for vibration and heat.

The screed assembly shall produce a finished surface of the required smoothness, thickness, and texture without tearing, shoving, displacing or segregating the asphalt concrete mixture. Screed extensions used for paving a constant width shall be heated and vibrated. Auger extensions shall be within one and one-half feet (1.5') of the screed extension on both sides.

The paver shall be capable of placing courses in thicknesses of from one-half inch (1/2") to at least three inches (3"), and, in width, be adjustable in increments of six inches (6") and one foot (1').

The use of a pick-up machine to transfer the asphalt concrete mixture from a windrow to the paver hopper will be permitted, provided the pick-up machine is capable of collection of the windrowed material without damage to the underlying course. The Engineer will not allow the continued use of the pick-up machine if segregation, excessive temperature loss, or any detrimental effects are observed.

Paver shall be equipped with a means of preventing the segregation of the coarse aggregate particles from the remainder of the bituminous concrete mixture while

being carried from the paver hopper over the slat-conveyor to the auger chamber. The mechanism to accomplish this must be approved in writing by the paver manufacturer and may consist of chain curtains, deflector plates, or other devices and may be any combination of these.

The following specific requirements apply to the following identified bituminous pavers:

1. Blaw-Knox bituminous paver shall be equipped with the Blaw-Knox Materials Management Kit (MMK).

2. Cedarapids bituminous paver must have been manufactured in 1989 or later.

3. Caterpillar bituminous pavers shall be equipped with the following deflector plate models: 6630, 6631, or 6640.

Contractor shall provide a Certificate of Compliance that verifies the required mechanism has been installed to prevent bituminous paver segregation.

The Engineer shall approve all mechanisms proposed by Contractor for preventing paver segregation of coarse aggregate prior to the bituminous paver's use on the project.

D. Rollers

Rollers shall be self-propelled, reversible, and equipped to maintain clean and straight contact surfaces. Heat shall be maintained on pneumatic tires by skirting or other approved devices.

The number, weight, and type of rollers furnished shall be sufficient to obtain the required density and surface requirements while the mix is in a workable condition. One pneumatic and a minimum of one vibratory roller shall be furnished and operated in a workmanlike manner by the Contractor. There shall be at least one operator for each roller.

Pneumatic Tired Rollers:

Pneumatic tired roller shall ride on not less than seven uniformly sized and uniformly inflated smooth tires mounted on wheel rims of twenty inch (20") minimum diameter. The rear group of tires shall align behind and cover the spaces between the forward group of tires. Tires shall be inflated, and the roller ballasted, to provide a uniform (plus or minus five [5] pounds per square inch) minimum ground contact weight of seventy (70) pounds per square inch, unless a lower weight is requested in writing by the Engineer. If a pneumatic roller experiences a pick-up problem, the Contractor shall be required to add an effect release agent to the tire watering tank.

Steel-Drum Rollers: Steel-wheel roller may be of two (2) types:

Two-axle static drum rollers, 8 to 22 tons in weight.

Two-axle vibratory drum rollers, 8 to 22 tons in weight.

All rollers shall be equipped with power units of not less than four (4) cylinders and under working conditions shall develop a compression in the rear wheels of two hundred fifty (250) to three hundred fifty (350) pounds per inch of roller width. Rollers shall be in good working condition and be free from backlash, faulty steering mechanism, or worn parts. Rollers shall be equipped with adjustable scrapers to keep the drums clean and with efficient means of keeping the drums/wheels wet to prevent mixes from sticking to the drums. Rollers/Drums shall be free of flat areas, openings or projections which will mar the surface of the pavement.

E. Haul Trucks

Vehicles used for the transportation of hot-mix asphalt from the plant to the Project shall have tight metal bottoms and shall be free from dust, screenings, petroleum oils, volatiles, and other mineral spirits which may effect the mix being hauled. The truck beds shall be cleaned as often as required, but at least once a day. After this operation the truck bed shall be elevated and thoroughly drained; no excess solution shall be permitted.

When requested by the Engineer, trucks shall be equipped with covers of canvas, insulated boxes, or other suitable material, and be of sufficient size and weight to protect the load from adverse weather conditions and to maintain the required mix temperatures.

F. Truck Scales

Hot mix asphalt shall be weighed on platform scales furnished by the Contractor or on public scales at the Contractor's expense. The scales shall be satisfactory to the Engineer and shall comply with all State Laws governing the use of scales. The scales shall be tested and sealed by an authorized public official, at the expense of the Contractor, as often as the Engineer may deem necessary to ensure their accuracy. Batch plant proportioning scales may be used in lieu of truck scales only with the written approval of the Engineer.

G. Hand Tools

Only lutes or asphalt rakes shall be used during the spreading operation and when finishing by hand.

Tamping irons shall weigh not less than twenty-five (25) pounds and shall have a bearing area not exceeding forty-eight (48) square inches. Mechanical compaction equipment, satisfactory to the Engineer, may be used instead of tamping irons.

H. Straightedges

Straightedges ten (10') and sixteen feet (16') in length, to test the finished surface, shall be provided by the Contractor. The sixteen foot (16') straightedge shall be used on straight sections and the ten foot (10') straightedge on vertical curves or crown.

Article 6.5 Construction

A. Weather Limitations

Asphalt concrete mixture shall not be placed when it is raining or when rain is imminent, on a saturated surface, on an unstable/yielding roadbed, when the base material is frozen, or when weather conditions prevent proper handling or finishing of the mixture. Asphalt concrete mixture shall not be placed unless the surface temperature is forty-five degrees (45º) Fahrenheit or warmer and the ambient air is at least thirty-two degrees (32º) Fahrenheit and not descending. Air temperature shall be measured in the shade away from heat sources at the paving site.

B. Preparation of Area to be Paved

The area to be paved shall be true to line and grade, having a smooth dry, compacted surface prior to the start of paving operations. The area to be paved shall be free from all loose asphalt and foreign material.

Contractor shall notify the Engineer, a minimum of twenty-four (24) hours prior to paving, that the newly constructed, rotomill planed, or existing surface, has been prepared in conformance with the Drawings and Specifications and are ready to be paved. Engineer or his representative shall inspect the grade through the use of string line, straightedge, levels, or any other means necessary. Upon determining the grade that has been proposed for paving is in conformance with the Drawings and Specifications, Engineer will provide written authorization for the Contractor to proceed with the paving. The Contractor shall not initiate paving prior to receiving written authorization to proceed.

The surface of the Leveling Course, when finished, shall not demonstrate any deviation in excess of three-eighths inch in ten feet (3/8" in 10') parallel with, and at right angles to, the centerline, or more than five-eighths inch (5/8") total from centerline to face of curb of the area to be paved. Any deviation in excess of this amount shall be corrected by loosening, adding, or removing material and reshaping and compacting to satisfy the above requirement.

Existing paved surfaces shall be cleaned of loose material by sweeping with a power broom, supplemented by hand sweeping, if determined necessary by the Engineer.

After rotomilling of a section of the roadway has been completed, that section shall be inspected by the Engineer for areas of distress or failure. Areas requiring repair

shall have the remaining pavement removed, and the distressed area shall be excavated to the depth and limits directed by the Engineer. The excavated area shall be backfilled, as directed by the Engineer, with crushed aggregate Leveling Course material and/or Asphalt Concrete leveling course in conformance with the Drawings and Specifications. Pavement surface irregularities, remaining from the rotomilling effort, that extend more than three-quarters inch (3/4") below the milling indentations shall be pre-leveled and brought into conformance with the tolerances established in Article 6.6 - Density and Surface Requirements. Pre-leveling shall be completed with an approved Class D asphalt concrete in accordance with this Section and include the furnishing, hauling, placing, and compaction of the asphalt concrete.

Contact surfaces of curbing, gutters, manholes, and other structures shall be painted with a thin, uniform coating of asphaltic cement or approved equal material prior to the mixture being placed against them. Butt joints on previously placed cooled pavement shall be saw cut and tack coated prior to continuing the paving operation.

Contractor shall not pave against newly placed concrete curbing until said curbing has cured for a minimum five (5) days. For the purpose of paving operations only, curb curing time may be reduced to seventy-two (72) hours only upon receipt of Contractor's written certification that Type III Portland High-Early-Strength cement concrete was used in, properly placed, and appropriate curing compounds were applied to the adjacent curb and gutter.

C. Preparation of Paving Asphalt

The asphalt shall be heated at the paving plant to a temperature at which it can be properly handled through the pumping system, but at no time shall the temperature of the asphalts exceed that recommended by the asphalt supplier or manufacturer, or be greater than three hundred twenty-five degrees (325º) Fahrenheit or less than two hundred fifty degrees (250º) Fahrenheit.

D. Preparation and Handling of Aggregates

The aggregate for the asphalt concrete mixture shall be heated and dried to a temperature compatible with the mix requirements specified. The burner on the dryer shall be properly adjusted to avoid damage to the aggregate and to avoid the presence of unburned fuel on the aggregate. Any asphalt concrete mixture in which soot or fuel is present shall be wasted and no payment made.

Drying operations shall reduce the aggregate moisture content so that the moisture content of the asphalt concrete mixture, sampled at the point of acceptance for asphalt cement content, shall be no more than one-half percent (0.5%) (by total weight of mix), as determined by AASHTO T-329. Adequate dry storage shall be provided for the mineral filler.

Aggregates shall be stored at the plant in such a manner that the separate sizes will not become intermixed. Cold aggregate shall be carefully fed to the plant in such proportions that surplus and shortages in the hot bins will not cause breaks in the continuous operations.

Stockpiles and bins shall be sampled for gradation analysis, dust coating, and for other purposes, at the option of the Engineer.

When requested by the Engineer, the Contractor shall provide representative samples from each of the hot bins. Samples shall be used to determine compliance with these Specifications.

1. Drying:

   The aggregate shall be thoroughly dried and heated to provide a paving mix within a tolerance specified herein. The moisture content of the heated and dried aggregate shall not exceed one-half percent (0.5%).

   Dust collected during the drying operation may be fed uniformly back into the hot aggregate prior to screening, provided a position mechanical feed is used which will control the feed back to the quantity specified by the Engineer.

2. Screening:

   Aggregates shall be screened into sizes that may be recombined into a gradation meeting the requirements of the job-mix formula. Screens shall have normal capacities slightly in excess of the production capacity of the mixer and rated capacity of the dryer.

3. Hot Aggregate Storage:

   Hot screened aggregate shall be stored in such a manner as to minimize segregation and loss of temperature.

E. Mixing Plants and Controls

All plants shall be equipped with a positive means to govern the time of mixing. Mixing time shall not be altered unless requested by the Engineer.

Frequent gradation analysis of the hot aggregates of the completed mix shall be made to be certain that the materials being used and produced are within the tolerances of the job-mix formula and the specifications of the mix being used. If the mix is found to be outside the hot-mix formula tolerances or outside the specification limits, corrections shall be made in quantities measured from the hot bins and suitable changes made at the cold bin feeders. It shall be the responsibility of the Contractor to furnish a finished product in accordance with the Contract Documents. Tests conducted by the Engineer are for quality acceptance purposes only and are not authorized for use in plant calibration. Plant metering

systems and scales shall be calibrated to the accuracy specified in AASHTO M-156.

Batch Type Plant: When the mix is produced in a batch type plant, the aggregate shall be accurately weighed in the proper proportions to provide the batch weight.

The asphalt shall be heated to provide a material sufficiently fluid to produce a uniform coating on every particle of aggregate within the specified mixing time. The temperature of the aggregates and asphalt immediately prior to mixing shall be approximately that of the completed batch. In no case shall the temperature of the asphalt and aggregate vary more than twenty-five degrees (25º) Fahrenheit when placed in the mixing chamber.

A dry mixing period of not less than ten (10) seconds shall precede the addition of the asphalt to the mix. Excess wet mixing shall be avoided. Wet mixing shall continue as long as is necessary to obtain a thoroughly blended mix. The minimum percent of coated particles used to establish the mixing time interval shall be ninety-five percent (95%) as determined by AASHTO T-195.

Continuous Type Plant: Continuous mix and drum plants shall in general be controlled in the same manner as batch plants.

The determination of mixing time shall be by weight method under the following formula unless otherwise approved:

$$\text{Mixing time in seconds} = \frac{\text{Pugmill Dead Capacity in Pounds}}{\text{Pugmill Output in Pounds Per Second}}$$

The weights used for computing mixing time shall be determined for the job, from tests made by the Contractor and shall conform to the recommendations of the manufacturer. Mixing temperature shall not exceed that recommended by the asphalt cement manufacturer without the written approval of the Engineer. To aid in determining the proper temperature of the completed batch, current viscosity data shall be available at the plant at all times.

F. Transportation of Mix

The dispatching of the hauling vehicles shall be so scheduled that all material delivered may be placed and rolled in daylight. When variations in size of loads, speed of trucks, length of haul, and conditions of trucks interfere with orderly continuous operations, the Engineer may order suitable corrections to be made.

G. Mechanical Spreading

Contractor shall submit a Paving Plan for the Engineer's review a minimum of five (5) working days prior to initiating paving operations. The plan shall consist of at least the following items:

1. Paving schedule to include sequence of operations.

2. Operational details to include:

   a. Plant operating capacity and target production rate. Process control testing frequency for gradation, moisture, asphalt cement content, and compaction.

   b. Number and capacity of trucks, cycle time, and delivery rate.

   c. The manufacturer and model of the paver and pick-up machine to include information on grade followers, sensors, operating speed, and production rate of the pavers.

   d. Number, type, weight, and operating speed of rollers, including replacement roller.

   e. Location and method of constructing longitudinal and transverse joints.

   f. Construction plan for paving intersections and driveways.

3. The asphalt concrete shall be placed on the road surface at a temperature not less than two hundred fifty degrees (250º) Fahrenheit or greater than three hundred degrees (300º) Fahrenheit. Additionally, the maximum temperature to which the asphalt concrete is heated shall not exceed the supplier's recommendation. The asphalt concrete temperature shall be measured directly behind the paver screed at the time of placement.

   The asphalt concrete mixture shall be laid upon a surface approved in writing by the Engineer, spread and struck-off and compacted to the thickness specified in the Drawings and specifications. Asphalt pavers shall be used to distribute the asphalt concrete mixture in lanes of such widths as to hold to a practical minimum the number of longitudinal joints required.

Longitudinal joints and edges shall be constructed to true line markings. Lines shall be established parallel to the center line for the paver to follow in placing individual lanes. The paver shall be operated and positioned to closely follow the established line. When backing trucks to the finisher, care shall be taken not to jar the paver.

The texture of the unrolled surface shall be checked to determine its uniformity. The adjustment of the screed, tamping, feed screws, hopper feed, etc., shall be checked frequently to assure uniform spreading of the mix. Segregation of the material shall not be permitted. If segregation occurs, the spreading operation shall be immediately suspended until the cause is determined and corrected.

Any irregularities left by the paver shall be corrected by trimming directly behind the machine by use of lutes or covered rakes. Immediately after trimming, the edges of the course shall be thoroughly compacted by tamping. Distortion of the pavement during this operation shall be avoided.

Edges against which additional pavement is to be placed shall be vertically formed to true line. A lute or covered rake shall be used immediately behind the finisher, when required to obtain a true line and vertical edge. Any irregularities in the surface of the pavement course shall be corrected directly behind the paver. Excess material forming high spots shall be removed by a shovel or lute. Indented areas shall be filled with hot-mix and smoothed with the back of a shovel pulled over the surface. Fanning of material over such areas shall not be permitted.

On longitudinal joints, the paver shall be positioned so that in spreading, the material overlaps the edge of the lane previously placed by one or two inches (1" or 2") and is sufficiently high to allow for compaction. The coarse aggregate in the material overlapping the joint shall all be raked out into the cold lane as soon as possible behind the paver and broomed up and wasted. In no case shall scattered rocks be rolled into the surface of either lane.

Asphalt concrete mixture which is contaminated or segregated will be rejected.

When multiple lifts are specified in the Contract, the final lift shall not be placed until all lower lifts throughout that section, as defined by the Paving Plan, have been placed and accepted. Paving shall not begin until all adjacent curb has been poured for at least seven (7) days when Type I/II cement is used or three (3) days when Type III cement is used.

H. Hand Spreading

On areas where irregularities or unavoidable obstacles make the use of mechanical spreading and finishing equipment impracticable, the asphalt concrete mixture shall be spread, raked, and luted by hand tools. For such areas, the asphalt concrete mixture shall be placed to the required compacted thickness and density.

I. Compaction

Immediately after the asphalt mixture has been spread, struck off and surface irregularities adjusted, it shall be thoroughly and uniformly compacted by rolling.

The surface shall be rolled when the mixture is in the proper condition and when the rolling does not cause undue displacement, cracking, or shoving.

Initial rolling shall be done with a steel-drum roller with the drive roll operating toward the paver, and/or a suitable pneumatic tired roller. Initial rolling shall be completed while the bituminous mat temperature is above two hundred twenty-five degrees (225º) Fahrenheit.

Following the initial rolling at least three coverages of the pavement shall be completed with a pneumatic tired roller, while the mat temperature is above one hundred seventy-five degrees (175º) Fahrenheit.

Final rolling shall be completed with a steel–drum roller and shall continue until roller marks and further compression are not evident in the pavement and specified density has been achieved.

Unless otherwise directed, rolling shall begin at the sides and proceed longitudinally parallel to the road center line, each trip overlapping one-half the roller width, gradually progressing to the crown of the road. When paving in echelon or abutting a previously placed lane, the longitudinal joint should be rolled first followed by the regular rolling procedure. On superelevated curves the rolling shall begin at the low side and progress to the high side by overlapping of longitudinal trips parallel to the centerline.

Any displacement occurring as result of the reversing of the direction of a roller, or from other causes, shall be corrected at once by the use of rakes and addition of fresh mixture when required. Care shall be exercised in rolling not to displace the line and grade of the edges of the asphalt mixture.

To prevent adhesion of the mixture to the rollers, the wheels shall be kept properly moistened with water or water mixed with very small quantities of detergent or other approved material. Excess liquid will not be permitted.

Along forms, curbs, headers, walls, and other places not accessible to the rollers, the mixture shall be thoroughly compacted with hot hand tampers, smoothing irons, or with mechanical tampers. On depressed areas, a trench roller may be used or cleated compression strips may be used under the roller to transmit compression to the depressed area.

Rollers or other vehicles shall not be parked or left standing on pavement that has not cooled sufficiently to prevent indentation by wheels.

J. Joints

The Contractor shall not construct longitudinal joints in the driving wheel paths. The Contractor shall align the joints of the top layer of pavement to either the centerline of the road or to lane lines. The Contractor shall offset the longitudinal joint in the top layer of pavement not more than six inches (6”) from centerline of edge of stripe. Joints shall be constructed to ensure a continuous bond between old and new sections of the course. All joints shall present the same texture and smoothness as other sections of the course. The Contractor shall offset the longitudinal joints in the top layer from the joint in the layer immediately below by at least four inches (4”).

When joining existing pavement and new pavement, the old pavement shall be cut in a neat line with a power driven saw.

Improperly formed joints resulting in surface irregularities shall be removed full depth, replaced with fresh asphalt concrete mixture, and thoroughly compacted. Rolling of joints after the material has cooled below one hundred seventy degrees

(170º) Fahrenheit shall not be allowed. All pavement removal shall be precut to a neat line with a power-driven saw.

A tack coat of asphalt cement or asphalt emulsion shall be applied on all cold joints and allowed to break prior to placing fresh asphalt concrete mixture against the joint. This Work shall be completed by Contractor just prior to paving.

Transverse joints shall be formed by saw cutting back on the previous run to expose the full depth of the course or by using a removable bulkhead. Transverse joints shall not be perpendicular to centerline, but shall be skewed between fifteen and twenty-five degrees (15º and 25º).

K. Repair and Replacement

Asphalt concrete mixture that becomes contaminated with foreign material or is in any way defective as determined by the Engineer shall be removed. Skin patching will not be permitted. Defective materials shall be removed for the full thickness of the course. The pavement shall be cut so that all edges are vertical, the sides are parallel to the direction of traffic, and the ends are skewed between fifteen and twenty-five degrees (15º and 25º). Edges shall be coated with a thin tack coat of material. Fresh asphalt concrete mixture shall be placed in sufficient quantity so that the finished surface will conform to grade and smoothness requirements. The asphalt concrete mixture shall be compacted to the density specified. Any area determined to have an excess or deficiency of asphalt concrete shall be corrected by full depth removal and replacement. No payment shall be made for material replacing defective material. All costs associated with the patching of defective areas shall be borne by Contractor.

L. Vehicular Traffic

Contractor shall not allow vehicular traffic on the asphalt mat surface until the mat surface has cooled to below one hundred twenty degrees (120º) Fahrenheit. Any portion of the asphalt concrete mixture that becomes loose and broken, rutted, or damaged in any way due to vehicular traffic on the asphalt mat surface prior to it cooling to below one hundred twenty degrees (120º) Fahrenheit, shall be removed and replaced with fresh hot asphalt concrete, which shall be compacted to conform with the surrounding area at the specified density.

Article 6.6 Density and Surface Requirements

The complete pavement shall have a density equal to or greater than ninety-six (96) percent of Maximum Density (Marshall Method), except for trail pavement which shall have a density equal to or greater than ninety percent (90%). Maximum Density shall be determined in accordance with the test procedures specified in Section 40.01, Article 1.2 - Applicable Standards. The compacted specimens on which the Maximum Density is determined, shall be produced from a laboratory specimen made from the same days mix, and as close to the lay down temperature as practicable.

When requested by the Engineer, the Contractor shall, without charge, provide the Engineer with test samples of asphalt concrete cored from the completed pavement. All cores shall be at least four inches (4") in diameter and the core holes will be patched by the Contractor within seventy-two (72) hours.

The final surface shall be of a uniform texture conforming to true grade, and cross sections in accordance with the Contract Documents. The thickness of the course shall be in accordance with the Drawings and Specifications. Where curb and gutter is present the compacted pavement surface shall be one-eighth inch plus or minus one-eighth inch (1/8"±1/8") above the top front edge of curb. The specified position of the pavement surface shall be achieved through proper grading of the subgrade, in order not to exceed the design thickness of the pavement.

Prior to the delivery of the first load of asphalt to the Project, the Contractor shall furnish straightedges to the Inspector for checking surface uniformity. Irregularities in the finished pavement surface shall not exceed three-sixteenths of an inch (3/16") within ten feet (10'), or five-sixteenths of an inch (5/16") within sixteen feet (16'). Non-conforming surfaces shall be subject to rejection by the Engineer. Irregularities which develop before the completion of rolling shall be remedied by loosening the surface mix, removing or adding material as may be required, and rerolling.

For trails, a ten foot (10') straightedge, supplied by the Contractor, shall be used to check the paving surface. Surface irregularities shall not exceed one inch in ten feet (1" in 10'). Non-conforming surfaces shall be subject to rejection by the Engineer. Irregularities which develop before completion of rolling shall be remedied by loosening the surface mix, removing or adding material as may be required, and rerolling.

Article 6.7 Measurement

Asphaltic concrete will be paid for by one of the methods as defined in the paragraph below and as designated in the Bid Schedule.

A. Measurement by the Ton

Measurement of hot-mix asphaltic paving materials, unless otherwise provided, shall be weighed on truck scales in accordance with Article 6.4, SubArticle F – Truck Scales. Asphalt concrete pavement shall be measured per ton (2,000 lbs) based on the amount of hot mix asphaltic material actually used in the completed and accepted work modified as follows: the quantity paid for shall not exceed one hundred and five percent (105%) of tonnage determined on the basis of the average core density, the specified neat line thickness, and the completed area of asphaltic concrete pavement. In addition, the Owner will not pay for that portion of any load in excess of the legal gross weight for the vehicle delivering the load.

B. Measurement by the Square Yard

Measurement of hot-mix asphaltic paving materials, unless otherwise provided, shall be measured by the completed and accepted work. The area measured will be that which is shown on the Drawings plus any additional areas as authorized by the Engineer in writing.

The tolerance for thickness of asphaltic concrete under square yard measurement shall be plus or minus one-fourth inch (1/4") from design mat thickness, as shown on the typical section. This one-fourth inch (1/4") variance shall be the exception only with the average variance for the job being plus or minus one-eighth inch (±1/8") from the design mat thickness. All asphaltic concrete placed outside the variables allowed will be corrected by the Contractor at his expense.

C. Measurement by the Linear Foot

Measurement of hot-mix asphaltic paving materials for bike trails, unless otherwise provided, shall be per linear foot along the centerline of the constructed trail. The thickness of asphalt shall not be less than the thickness shown in the typical section as noted on the Drawings.

Article 6.8 Basis of Payment

Payment for this Work shall be in accordance with Division 10, Section 10.07 - Measurement and Payment, and shall include full payment for all Work described in this Section.

Payment shall be made under the following units:

ITEM	UNIT
A.C. Pavement (Class)	Ton
A.C. Pavement (Class, Thickness)	Square Yard
A.C. Pavement (Class, Thickness)	Linear Foot

SECTION 40.07 STONE MASTIC ASPHALT CONCRETE PAVEMENT

Article 7.1 General

The Work under this Section consists of performing all operations pertaining to furnishing and mixing of aggregate, asphalt cement, and additives at a mixing plant; and the hauling, spreading, and compaction of the Stone Mastic Asphalt (S.M.A.) Concrete mixture on a previously prepared surface as specified in the Contract and in conformance with the lines, grades, and thicknesses shown on the Drawings.

Article 7.2 Material and Testing

A. Asphalt

Contractor shall submit a certified analysis of the asphalt from the refinery laboratory to the Engineer for review and approval. A copy of the certified analysis shall accompany each shipment of asphalt to the asphalt mixing plant. The Engineer reserves the right to make check tests of the asphalt received on the Project site; and if the asphalt is not in accordance with the certified analysis, he may reject the materials.

The asphalt required by these specifications shall conform to the requirements of The Asphalt Institute for the type and grade. For SMA Class of asphalt concrete, the asphalt cement or binding shall conform to the requirements of AASHTO M-320 and be certified Performance Grade Asphalt Binder PS 64-28.

B. Aggregate for Stone Mastic Asphalt Pavement

1. Coarse Aggregate

Coarse aggregate (that material retained on the No. 4 Sieve) shall be crushed stone or crushed gravel and shall consist of sound, tough, durable rock of uniform quality. All material shall be free from clay balls, vegetative matter, or other deleterious matters. Coarse aggregate shall not be coated with dirt or other finely divided mineral matter. In addition, coarse aggregate shall meet the following requirements:

Property	Test Method	Requirement
Percent of Wear	AASHTO T-96	45 max
Degradation Value	ATM T-13	30 min
Percent Sodium Sulfate Loss	ASTM C-88	9 max (5 cycles)
Percent Fracture Double Face	ASTM D-5821	90 min
Flat and Elongated Particles	ASTM D-4791	
3 to 1		15% max
5 to 1		5% max
Absorption	AASHTO T-85	2% max
Nordic Abrasion	ADOT&PF Alaska Test Method 312	12% max

2. Fine Aggregate

Fine aggregate (passing the No. 4 Sieve) shall meet the quality requirements of AASHTO M-29, and shall consist of one hundred percent (100%) crushed aggregate and shall be nonplastic (AASHTO T-90). Additionally, the uncompacted Voids shall be a minimum of forty-five percent (45%) when tested by AASHTO T-304 method A.

3. Mineral Filler

Mineral filler shall conform to the requirements of AASHTO M-17. The mineral filler shall be free of organic impurities and have a plastic index not greater than four. The mineral filler shall be sufficiently dry to flow freely and be free from agglomerations. The mineral filler shall not have less than forty percent (40%) by weight smaller in size than 0.02 mm.

Article 7.3 Composition of Mixes

A. General Requirements

1. Blended Aggregate

The several aggregate fractions for the mixture shall be sized, graded, and combined in such proportions that the resulting composite blend conforms to the following grading requirements:

STONE MASTIC ASPHALT CONCRETE
AGGREGATE BROAD BAND
Percent Passing by Weight

Sieve Designation	Requirement
3/4”	100
1/2"	82-88
3/8”	60-70
# 4	25-29
# 8	18-24
# 16	15-20
# 30	12-18
# 50	11-15
# 100	10-14
# 200	7-10
* Asphalt Cement	6.4-7.5

* By Weight of Total Mix

B. Additive Materials

1. Anti-strip Additives

Anti-strip agents shall be used in the proportions determined by the (ATM) T-14 and shall be included in the approved Job-Mix Design. At least seventy percent (70%) of the aggregate shall remain coated when tested in accordance with ATM T-14.

2. Stabilizing Additives

Cellulose stabilizing additive shall be used. The dosage rate for the cellulose is three-tenths percent (0.3%) by weight of the total mix. The allowable tolerance per ton shall not exceed plus or minus ten percent (±10%) of the required weight of the stabilizing additive.

The cellulose-stabilizing additive shall conform to the following properties:

CELLULOSE STABILIZING ADDITIVE

Property	Requirement
Sieve Analysis:	
Method A - Alpine Sieve Analysis [1]	
Fiber Length	0.25" (max.)
Percent Passing # 100 Sieve	60-80
Method B - Mesh Screen Analysis [2]	
Fiber Length	0.035"-0.06"(avg.)
Percent Passing # 20 Sieve	75-95
Percent Passing # 40 Sieve	55-75
Percent Passing # 140 Sieve	10-30
Ash Content [3]	20 percent non-volatiles (max.)
pH [4]	7.5±1.0
Oil Absorption [5]	5.0±1.0 times fiber weight
Moisture Content [6]	<5 percent
Bulk Density [7]	1.25-2.50 lbs/ft^3

Notes:

1. Method A - Alpine Sieve Analysis. This test is performed using an Alpine Air Jet Sieve (Type 200 LS). A representative five-gram sample of fiber is sieved for fourteen (14) minutes at a controlled vacuum of twenty-two inches plus or minus three inches (22" ±3") of water. The portion remaining on the screen is weighed.
2. Method B - Mesh Screen Analysis. This test is performed using standard No. 20, 40, 60, 80, 100, and 140 sieves, nylon brushes, and a shaker. A representative ten (10) gram sample of fiber is sieved using a shaker and two nylon brushes on each screen. The amount retained on each sieve is weighed and the percentage passing calculated.
3. Ash Content. A representative two to three (2 to 3) gram sample of fiber is placed in a tared crucible and heated between eleven hundred and twelve hundred degrees (1100º and 1200º) Fahrenheit for not less than two hours. The crucible and ash are cooled in a desiccator and reweighed.

4. pH Test. Five grams of fiber is added to one hundred (100) ml of distilled water, stirred, and let sit for thirty (30) minutes. The pH is determined with a probe calibrated with pH 7.0 buffer.

5. Oil Absorption Test. Five grams of fiber is accurately weighed and suspended in an excess of mineral spirits for not less than five minutes to ensure total saturation. It is then placed in a screen mesh strainer (approximately one-half (0.5) square millimeter hole size) and shaken on a wrist action shaker for ten (10) minutes (approximately one and one-quarter inch [1 1/4"] motion at two hundred and forty [240] shakes/minute). The shaken mass is then transferred, without touching, to a tared container and weighed. Results are reported as the amount (number of times its own weight) the fibers are able to absorb.

6. Moisture Content. Ten grams of fiber is weighed and placed in a two hundred and fifty degree (250º) Fahrenheit forced-air oven for two hours. The sample is then reweighed immediately upon removal from the oven.

7. Bulk Density. Fluff fiber with air or Hobart Mixer, weigh out twenty-five (25) grams of fiber, place in 100-ml cylinder, tap cylinder, and measure volume.

C. Job-Mix

Contractor, at his expense, shall submit to the Engineer for approval a job-mix formula within the limits specified in this Article. The aggregate gradation of the job-mix formula, when plotted upon an aggregate grading chart, shall closely approximate the shape of average gradations for the limits specified. For that portion of the aggregate passing # 4 Sieve, gradings which range from at or near the maximum of one sieve to at or near the minimum of the next sieve will not be permitted. The Engineer may require increased asphalt content up to one-half percent (0.5%) above that indicated by the Marshall Design Criteria. Upon requiring increased asphalt content, the lower limit of percent voids and the upper limit of percent voids filled shall be waived.

D. Maximum Permissible Variations

Measured Characteristics	Permissible Variation Percent by Weight of Total Mix
3/4”	+/-6.0
1/2”	+/-6.0
3/8”	+/-6.0
# 4	+/-6.0
# 8	+/-6.0
# 16	+/-5.0
# 30	+/-4.0
# 50	+/-4.0
# 100	+/-3.0
# 200	+/-2.0
Asphalt Cement	+/-0.4
Density	93 Min. - 98 Max. of MSG

E. Test Methods

The job-mix shall be determined according to the Marshall Method, as set forth in State of Alaska, Department of Transportation and Public Facilities, Alaska Test Methods (ATM) T-17, except that the optimum voids total mix shall be adjusted from four percent (4.0%) voids to three percent (3.0%) voids when determining optimum asphalt content.

Upon compaction and testing of the job-mix specimens, the mixture shall conform to the aforementioned specifications within the following limits:

STONE MASTIC ASPHALT CONCRETE

MIX DESIGN REQUIREMENTS

Design Parameters	Requirements
Stability, lbs., min.	1,000
Flow, 0.01 inch (0.25)	8-16
Voids in Total Mix, Percent	2-4
Compaction, Number of Blows Each Side of Test Specimen	50
Dust-Asphalt Ratio (The Percent of Material Passing the No. 200 Sieve Divided by the Percent of Asphalt, by Weight of Mix)	0.6-1.4
Voids in the Mineral Aggregate (VMA), min.	15.0
Voids in Coarse Aggregate (VCA) of Asphalt Concrete	Less than VCA of the Coarse Aggr. as determined by AASHTO T-19
Asphalt Cement Content, %	6.2 to 7.4

Approved Job-Mix Designs and aggregates will have the full tolerances, as listed above, applied and will not be limited to the broad band as referenced in SubArticle 7.3.A.1 – Blended Aggregate. Tolerances will not be applied to the largest sieve specified.

Contractor shall provide a Stone Mastic Asphalt Concrete mixture that meets the Stone Mastic Asphalt Concrete Job-Mix formula submitted for approval.

At least fifteen (15) calendar days prior to the production of Stone Mastic Asphalt Concrete mixture, Contractor shall submit the following to the Engineer:

1. A letter stating the location, size, and type of mixing plant, the proposed gradation for the Job-Mix Design, gradations for individual stockpiles with supporting process control information, and the blend ratio of each aggregate stockpile. The proposed gradation must meet the requirements of the table for, SubArticle 7.3.A.1 – Blended Aggregate Stone Mastic Asphalt Concrete Aggregate Broad Band. Stone Mastic Asphalt Concrete mixtures produced from different plants shall not be mixed.
2. Representative samples of each of the aggregates to be blended. Sample sizes: one hundred (100) pounds of each intermediate and/or coarse aggregate, two hundred (200) pounds of fine aggregate, twenty-five (25) pounds of blend sand and/or mineral filler.
3. A minimum of three one (1) gallon samples of the asphalt cement proposed for use in the mixture, including name of product, manufacturer, test results,

manufacturer's certificate of compliance, and a temperature/viscosity curve for the asphalt cement.

4. A one-half (1/2) pint sample of the anti-strip additive proposed, including name of product, manufacturer, manufacturer's data sheet, and current Materials Safety Data Sheet (MSDS).

5. A minimum five-pound sample of the cellulose-stabilizing additive proposed for use in the mixture, including name of product, manufacturer, test results, and manufacturer's certificate of compliance.

Article 7.4 Equipment

A. General

All equipment shall be in good working order and free of asphalt concrete mix buildup. All equipment shall be available for inspection and demonstration of operation twenty-four (24) hours prior to placement of Stone Mastic Asphalt Concrete mix.

B. Bituminous Mixing Plants

Contractor shall use an asphalt plant designed to dry aggregates, maintain accurate temperature control, and accurately proportion asphalt cement and aggregates. Contractor shall calibrate the asphalt plant not more than thirty (30) days in advance of production and furnish copies of the data to the Engineer at least one day prior to Stone Mastic Asphalt Concrete production.

The asphalt plant shall have a scalping screen to prevent oversize material or debris from being incorporated into the Stone Mastic Asphalt Concrete mixture. Aggregate and asphalt cement sampling locations meeting OSHA safety requirements shall be provided.

Proportioning (batch) scales shall not be used for weighing material for payment. Weight scales used in conjunction with a storage silo may be used to weigh the final product for payment, provided the scales are certified. The asphalt plant shall maintain a current Air Quality Permit issued by the State of Alaska.

C. Hauling Equipment

Trucks used for hauling asphalt mixtures shall have tight, clean, smooth metal beds which have been thinly coated with a minimum amount of paraffin oil, lime water solution, or other manufactured asphalt release agent. Diesel fuel or fuel oil shall not be used as an asphalt release agent.

Each truck shall have a watertight canvas cover of such size as to extend at least one foot (1') over the sides and end of the truck bed and be adequately secured to protect the Stone Mastic Asphalt Concrete mixture. The use of the canvas cover shall be at the Engineer's direction.

D. Asphalt Pavers

Asphalt pavers shall be self-propelled units provided with a heated vibratory screed. Grade and cross slope shall be controlled through the use of automatic grade and slope control devices. The paver screed control system shall be automatically actuated by the use of an erected string line or a mobile string-line (ski) at least thirty feet (30') in length on the high side of the paver. Grade control shall be used on either a) both the high and low sides or b) grade control on the high side and slope control on the low side.

The paver shall be equipped with a receiving hopper having sufficient capacity for a uniform spreading operation. The hopper shall be equipped with a distribution system to place the Stone Mastic Asphalt Concrete mixture uniformly in front of the screed.

The screed assembly shall produce a finished surface of the required smoothness, thickness, and texture without tearing, shoving, or displacing the Stone Mastic Asphalt Concrete mixture. Screed extensions used for paving a constant width shall be heated and vibrated. Auger extensions shall be within one and one-half feet (1.5') of the screed extension on both sides.

The use of a pick-up machine to transfer the Stone Mastic Asphalt Concrete mixture from a windrow to the paver hopper will be permitted, provided the pick-up machine is capable of collection of the windrowed material without damage to the underlying course. The Engineer will not allow the continued use of the pick-up machine if segregation, excessive temperature loss, or any detrimental effects are observed.

E. Rollers

Contractor shall supply a minimum of three rollers weighing a minimum of twelve (12) tons each to compact the mixture to the required density while maintaining the pace of the paving operations. Rollers shall be of the static steel wheel or vibratory steel wheel type. The roller drums shall be a minimum of seven feet (7') wide. The rollers shall be self-propelled and capable of reversing without backlash. They shall be specifically designed to compact hot asphalt concrete mixtures. The use of equipment which results in crushing of the aggregate, or pick-up of the Stone Mastic Asphalt Concrete mixture will not be permitted.

F. Truck Scales

Hot mix asphalt shall be weighed on platform scales furnished by Contractor or on public scales at Contractor's expense. The scales shall be satisfactory to the Engineer and shall comply with all state laws governing the use of scales. The scales shall be tested and sealed by an authorized public official, at the expense of Contractor, as often as the Engineer may deem necessary to ensure their accuracy.

Article 7.5 Construction

A. Weather Limitation

Stone Mastic Asphalt Concrete mixture shall not be placed when it is raining or when rain is imminent, on a wet surface, on an unstable/yielding roadbed, when the base material is frozen, or when weather conditions prevent proper handling or finishing of the mixture. No Stone Mastic Asphalt Concrete mixture shall be placed unless the surface temperature is forty-five degree (45º) Fahrenheit or warmer and the ambient air is at least thirty-five degrees (35º) Fahrenheit and not descending.

B. Preparation of Area to be Paved

Existing surfaces shall be prepared in conformance with the Drawings and Specifications. Existing paved surfaces shall be cleaned of loose material by sweeping with a power broom, supplemented by hand sweeping, if necessary.

After planing of a section of the roadway has been completed, that section shall be inspected by the Engineer for areas of distress or failure. Areas requiring repair shall have the remaining pavement removed, and the distressed area shall be excavated to the depth and limits directed by the Engineer. The excavated area shall be backfilled, as directed by the Engineer, with crushed aggregate leveling course material in conformance with the Drawings and Specifications, asphalt concrete leveling course, or with Stone Mastic Asphalt Concrete. Pavement surface irregularities remaining from the planing effort that extend more than three-quarter inch (3/4") below milling indentation shall be pre-leveled and brought into conformance with the tolerances established in Article 7.6 Density and Surface Requirements. Pre-leveling shall be completed with an approved Class B Asphalt Concrete in accordance with Section 40.06 - Asphalt Concrete Pavement and include the furnishing, hauling, placing, and compaction of the asphalt concrete.

Contact surfaces of curbing, gutters, manholes, and other structures shall be painted with a thin, uniform coating of asphaltic cement or approved equal material prior to the mixture being placed against them. Butt joints on previously placed cooled pavement shall be tack-coated prior to continuing the paving operation.

C. Preparation of Paving Asphalt

The asphalt shall be heated at the paving plant to a temperature at which it can be properly handled through the pumping system, but at no time shall the temperature of the asphalt exceed that recommended by the asphalt supplier or manufacturer, or be greater than three hundred and twenty-five degrees (325º) Fahrenheit or less than two hundred and fifty degrees (250º) Fahrenheit.

D. Preparation and Handling of Aggregates

The aggregate for the Stone Mastic Asphalt Concrete mixture shall be heated and dried to a temperature compatible with the mix requirements specified. The burner

on the dryer shall be properly adjusted to avoid damage to the aggregate and to avoid the presence of unburned fuel on the aggregate. Any Stone Mastic Asphalt Concrete mixture in which soot or fuel is present shall be wasted and no payment made.

Drying operations shall reduce the aggregate moisture content so that the moisture content of the Stone Mastic Asphalt Concrete mixture, sampled at the point of acceptance for asphalt cement content, shall be no more than one-half percent (0.5%) (by total weight of mix), as determined by WAQTC TM 6. Adequate dry storage shall be provided for the mineral filler and the stabilizing additive.

E. Mixing Plants and Controls

The aggregate, asphalt cement, additives, and stabilizing additives shall be combined uniformly in the amounts required by the Job-Mix Design. The materials shall be mixed such that a complete and uniform coating of the aggregate is obtained.

1. Batch Plants

Stabilizing additive shall be added through a separate inlet directly into the weigh hopper above the pugmill. The addition of the stabilizing additive shall be timed to occur during the hot aggregate charging of the hopper. Adequate dry mixing time is required to ensure proper blending of the aggregate and fiber stabilizer.

2. Drum Mix Plants

Cellulose stabilizing additive shall be introduced into the drum mixer at the same point the asphalt cement is added. Operation of the drum mixer will be such to ensure complete blending of the stabilizing additive into the mix.

The dry mixing and wet mixing times for Stone Mastic Asphalt Concrete with cellulose stabilizing additive shall be a minimum of fifteen (15) seconds and forty (40) seconds, respectively. For batch plants, dry aggregate shall be placed in motion immediately prior to the addition of asphalt cement. Wet mixing time shall be adequate to obtain ninety-eight percent (98%) coated particles when tested in accordance with AASHTO T-195.

The temperature of the Stone Mastic Asphalt Concrete mixture at the time of the mixing shall be as determined by the Job-Mix Design.

Provisions shall be made for proportioning the mineral filler into the mixture uniformly and in the desired quantities. Special attention shall be directed to providing appropriate equipment for accurately proportioning the relative large amounts of mineral filler required for a Stone Mastic Asphalt Concrete mixture.

F. Temporary Storage of Asphalt Concrete Mixture

Temporary storage or holding of Stone Mastic Asphalt Concrete mixture in silo type storage bins will be permitted.

All of the Stone Mastic Asphalt Concrete mixture drawn from the silo type storage bins shall conform to all of the requirements for Stone Mastic Asphalt Concrete mixtures as if loaded directly into hauling equipment from the mixing plant. Signs of visible segregation, heat loss, changes from the Job-Mix Design, changes in the characteristics of asphalt cement, lumpiness, or stiffness of the mixture will be cause for rejection.

Rejected Stone Mastic Asphalt Concrete mixture shall be disposed of by Contractor at no cost to the Owner.

G. Mechanical Spreading

Contractor shall submit a Paving Plan for the Engineer's review a minimum of five (5) working days prior to initiating paving operations. The plan shall consist of at least the following items:

1. Paving schedule to include sequence of operations.

2. Operational details to include:

    a. Plant operating capacity and target production rate. Process control testing frequency for gradation, moisture, asphalt cement content, and compaction.

    b. Number and capacity of trucks, cycle time, and delivery rate.

    c. The manufacturer and model of the paver and pick-up machine, to include information on grade followers, sensors, operating speed, and production rate of the pavers.

    d. Number, type, weight, and operating speed of rollers, including replacement roller.

    e. Location and method of constructing longitudinal and transverse joints.

    f. Construction plan for paving intersections and driveways.

3. The Stone Mastic Asphalt Concrete shall be placed on the road surface at a temperature not less than two hundred and sixty degrees (260º) Fahrenheit or greater than three hundred degrees (300º) Fahrenheit. Additionally, the maximum temperature to which the Stone Mastic Asphalt Concrete is heated shall not exceed the supplier's recommendation. The Stone Mastic

Asphalt Concrete temperature shall be measured directly behind the paver screed at the time of placement.

The Stone Mastic Asphalt Concrete mixture shall be laid upon a surface approved by the Engineer, spread and struck-off and compacted to the required compacted thickness. The mixture shall be spread and compacted in one layer with a total thickness of two inches (2"). Asphalt pavers shall be used to distribute the Stone Mastic Asphalt Concrete mixture in lanes of such widths as to hold to a practical minimum the number of longitudinal joints required.

On areas where irregularities or unavoidable obstacles make the use of mechanical spreading and finishing equipment impracticable, the Stone Mastic Asphalt Concrete mixture shall be spread, raked, and luted by hand tools. For such areas the Stone Mastic Asphalt Concrete mixture shall be placed to the required compacted thickness.

Any Stone Mastic Asphalt Concrete mixture which is contaminated or segregated will be rejected.

When multiple lifts are specified in the Contract, the final lift shall not be placed until all lower lifts throughout that section, as defined by the Paving Plan, have been placed and accepted. Paving shall not begin until all adjacent curb has been poured and cured for at least seventy-two (72) hours.

H. Compaction

Immediately after the Stone Mastic Asphalt Concrete mixture has been spread, struck-off, and surface irregularities adjusted, it shall be thoroughly and uniformly compacted by rolling.

Due to the nature of Stone Mastic Asphalt Concrete mixtures, the surface shall be rolled immediately. Rolling shall be accomplished with a minimum of three steel wheel rollers of a minimum weight of twelve (12) tons each. Rolling procedures shall be adjusted to provide the specified pavement density. Rollers shall move at a uniform speed to obtain no less than ten to twelve (10-12) impacts per foot with the drive roller nearest the paver. The rollers vibratory eccentric's shall be set for high frequency and low amplitude. Rolling shall continue until all roller marks are eliminated and the minimum density has been obtained.

To prevent adhesion of the mixture to the rollers, it shall be necessary to keep the wheels properly moistened with water mixed with detergent or other approved material. Rollers showing evidence of excessive pick-up will be replaced.

Once sufficient in-place density has been achieved, rolling operations shall cease. If migration of asphalt cement and filler to the compacted pavement surface has

occurred, Contractor shall remove the defective area and replace it with fresh Stone Mastic Asphalt Concrete mixture at his expense.

The surface will be tested after final rolling at selected locations using a ten foot (10') straightedge. The variation of the surface from the testing edge of the straightedge between any two contacts with the surface shall not exceed three-sixteenth inch (3/16"). The Stone Mastic Asphalt Concrete mixture in all defective areas shall be removed and replaced. All costs associated with removal and replacement of Stone Mastic Asphalt Concrete mixture in the defective areas shall be borne by Contractor.

Areas not accessible to the rollers shall be graded with rakes and lutes and compacted with mechanical tampers. For depressed areas a trench roller may be used to achieve the required compaction.

Stone Mastic Asphalt Concrete mixture that becomes loose and broken, segregated, mixed with dirt, or is any other way defective shall be removed and replaced with fresh Stone Mastic Asphalt Concrete mixture, which shall be compacted to conform with the surrounding area. Areas where asphalt cement, stabilizing additive and/or filler has migrated to the compacted pavement surface and produced "flushing" or segregated coarse aggregate has formed "rock pockets" shall be removed and replaced with fresh Stone Mastic Asphalt, by the contractor without compensation.

The Stone Mastic Asphalt Pavement shall be compacted to a minimum of ninety-three (93%) and maximum of ninety-eight percent (98%) of maximum specific density (MSD) as determined in accordance with AASHTO T-209. The compacted specimens, on which the maximum density is determined, shall be calculated from a laboratory specimen produced from a field sample of the same days mix. Acceptance testing for field density shall be determined in accordance with AASHTO T-166/T-275.

Rollers or other vehicles shall not be parked or left standing on pavement that has not cooled sufficiently to prevent indentation by wheels.

I. Joints

Joints shall be constructed to ensure a continuous bond between old and new sections of the course. All joints shall present the same texture and smoothness as other sections of the course.

When joining existing pavement and new pavement, the old pavement shall be cut in a neat line with a power driven saw.

Improperly formed joints resulting in surface irregularities shall be removed full depth, replaced with fresh Stone Mastic Asphalt Concrete mixture, and thoroughly compacted. Rolling of joints after the material has cooled below one hundred and

seventy degrees (170º) Fahrenheit shall not be allowed. All pavement removal shall be precut to a neat line with a power driven saw.

A tack coat of asphalt cement or asphalt emulsion shall be applied on all cold joints and allowed to break prior to placing fresh Stone Mastic Asphalt Concrete mixture against the joint. Contractor shall complete this Work immediately prior to paving.

Transverse joints shall be formed by saw cutting back on the previous run to expose the full depth of the course or by using a removable bulkhead. Transverse joints shall not be perpendicular to centerline, but shall be skewed between fifteen and twenty-five degrees (15º and 25º).

The longitudinal joints in one layer shall offset those in the layer immediately below by at least six inches (6"). Longitudinal joints shall be at lane lines. Where preformed marking tape striping is required, the longitudinal joint in the top layer shall be offset not more than six inches (6") from the edge of the stripe.

J. Repair and Replacement

Stone Mastic Asphalt Concrete mixture that becomes contaminated with foreign material or is in any way defective as determined by the Engineer shall be removed. Skin patching is not permitted. Defective materials shall be removed for the full thickness of the course. The pavement shall be cut so that all edges are vertical, the sides are parallel to the direction of traffic, and the ends are skewed between fifteen and twenty-five degrees (15º and 25º). Edges shall be coated with a thin tack coat of material. Fresh Stone Mastic Asphalt Concrete mixture shall be placed in sufficient quantity so that the finished surface will conform to grade and smoothness requirements. The Stone Mastic Asphalt Concrete mixture shall be compacted to the density specified. No payment shall be made for material replacing defective material. All costs associated with the patching of defective areas shall be borne by Contractor.

K. Vehicular Traffic

Contractor shall not allow vehicular traffic on the asphaltic mat surface until the mat surface has cooled to below one hundred and twenty degrees (120º) Fahrenheit. Any portion of the Stone Mastic Asphalt Concrete mixture that becomes loose and broken, rutted, or damaged in any way due to vehicular traffic on the asphaltic mat surface prior to it cooling to below one hundred and twenty degrees (120º) Fahrenheit, shall be removed and replaced with fresh hot Stone Mastic Asphalt Concrete, which shall be compacted to conform with the surrounding area at the specified density.

L. Test Section

A minimum five (5) days prior to proceeding with Stone Mastic Asphalt Concrete paving, Contractor shall place a minimum of three hundred (300) tons of Stone Mastic Asphalt Concrete mixture in a test section at a location approved by the

Engineer. The test section will be used to adjust the Job-Mix Design asphalt cement content and to also familiarize Contractor's personnel with the laydown and compaction of Stone Mastic Asphalt Concrete mixture.

Stone Mastic Asphalt Concrete mixture placed in the test strip that meets specifications will be measured and paid for at Contract prices. No payment will be made for mixture that does not meet specifications. If the test strip is placed within the project limits and does not meet specifications it shall be removed at Contractor's expense.

Article 7.6 Density and Surface Requirements

Stone Mastic Asphalt Concrete placed on this project shall have a density equal to or greater than ninety-three percent (93%) but shall not exceed ninety-eight percent (98%) of the maximum specific gravity (MSG) as determined in accordance with AASHTO T-209. For the first day's production of Stone Mastic Asphalt Concrete, the MSG will be determined by the Job-Mix Design. For each subsequent day's production, the MSG will be determined by a sample of Stone Mastic Asphalt Concrete from the respective day's production. Acceptance testing for field density will be determined in accordance with ATM T-18, except that a minimum six inch (6") diameter core is required.

When requested by the Engineer, Contractor shall, without charge, provide the Engineer with test samples of Stone Mastic Asphalt Concrete cored from the completed pavement. All cores shall be at least six inches (6") in diameter and the Contractor shall patch core holes within seventy-two (72) hours.

The final surface shall be of a uniform texture conforming to true grade and cross sections in accordance with the Contract Documents. The Engineer shall determine the thickness of the course.

Prior to the delivery of the first load of asphalt to the project, Contractor shall furnish straightedges to the Inspector for checking pavement surface uniformity. Surface irregularities of the newly placed Stone Mastic Asphalt Concrete Pavement shall not exceed three-sixteenth inch (3/16") within ten feet (10'), or five-sixteenth inch (5/16") within sixteen feet (16'). Stone Mastic Concrete Pavement with non-conforming surfaces shall be subject to rejection by the Engineer. Irregularities which develop before the completion of rolling shall be remedied by loosening the surface mix, removing or adding material as may be required, and rerolling.

Article 7.7 Measurement

Stone Mastic Asphalt Concrete will be paid for as defined in the following paragraphs and as designated in the bid schedule.

A. Measurement by the Ton

Measurement of Stone Mastic Asphalt Concrete, unless otherwise provided, shall be weighed on truck scales in accordance with Article 7.4, SubArticle F – Truck

Scales. Stone Mastic Asphalt Concrete pavement shall be measured per ton of two thousand (2,000) pounds based on the amount of hot mix Stone Mastic Asphaltic material actually used in the completed and accepted Work modified as follows: the quantity paid for shall not exceed one hundred and five percent (105%) of tonnage determined on the basis of the average core density, the specified neat line thickness, and the completed area of Stone Mastic Asphaltic Concrete pavement. In addition, the Owner shall not pay for that portion of any load in excess of the legal gross weight for the vehicle delivering the load.

B. Sampling and Testing

Samples taken for the determination of acceptance will be taken from behind the screed prior to initial compaction. Samples may be taken from the windrow, if belly-dumps are used, with the prior approval of the Engineer. Asphalt cement content will be determined by ATM T-23, AASHTO T164-94, or AASHTO T-308, with the exception that the moisture content will be determined by ATM T-25.

For Stone Mastic Asphalt Concrete mixture samples, the gradation will be determined in accordance with AASHTO T-30 from the aggregate remaining after the ignition oven (AASHTO T-308) has burned off the asphalt cement, or from aggregate extracted in accordance with AASHTO T164-94. If the asphalt cement content is determined by AASHTO T-308, the percent of asphalt shall be reduced by three-tenths percent (0.3%), by weight of total mix, for Stone Mastic Asphalt containing cellulose.

Article 7.8 Basis of Payment

Payment for this Work shall be in accordance with Division 10, Section 10.07 - Measurement and Payment, and shall include full payment for all Work described in this Section.

Payment shall be made under the following unit:

ITEM	UNIT
S.M.A. Concrete Pavement	Ton

SECTION 40.08 RECYCLED ASPHALT PAVING (RAP)

Article 8.1 General

The work under this Section consists of furnishing all materials and performing all operations necessary to complete placement and construction of a recycled asphalt paving (RAP) surface on an existing prepared subbase.

Article 8.2 Material

The RAP shall consist of crushed gravel, rock, sand, or other approved material. The aggregate shall be derived from recovered AC pavement and be free from lumps, balls of clay, or other objectionable matter, and shall be durable and sound. The portion of the material retained on a No. 4 sieve shall be known as coarse aggregate. Maximum RAP conglomerate (prior to extraction) shall pass the one inch (1") sieve.

RAP is to be delivered to the jobsite in an unheated condition. Delivery of heated material to the jobsite will be rejected unless previously approved by the Engineer.

A. Coarse Aggregate

The coarse aggregate material conforming to the requirement specified above shall have a percentage of wear not to exceed fifty (50) after five hundred (500) revolutions, as determined by the current requirements of ASTM C-131. It shall consist of angular fragments, reasonably uniform in density and quality, and reasonably free from thin elongated pieces, dirt, and other objectionable material. At least fifty percent (50%) of the coarse aggregate particles shall have at least two (2) mechanically fractured faces. Asphalt extraction and sieve analysis shall be performed in accordance with ASTM D-2172-A or B, AASHTO T-164-A or B, and AASHTO T-30.

B. Fine Aggregate

The fine aggregate shall consist of material free of organic or other objectionable matter. The fine aggregate, either naturally combined with the coarse aggregate or separately obtained and mixed therewith, shall be of such character that the composite material will conform to the gradation and other requirement specified.

C. Gradation

The composite mixture of coarse aggregate and fine aggregate, processed as hereinafter specified, shall conform to the following gradation limits:

Sieve Size	Percentage Passing By Weight
1"	100
3/4”	70-100
3/8”	50-85
# 4	35-65
# 10	25-50
# 40	10-30
# 80	5-20
# 200	2-10

Asphalt Content: 2.7% - 4.7%

Moisture Content: 3.5% Max

The asphalt content of RAP delivered to the project shall be determined on the individual extraction test results and not an average of extractions conducted.

Article 8.3 Construction

The RAP shall be placed to the lines, grades, and thicknesses shown on the Drawings and shall consist of the materials specified. The RAP shall provide a smooth stabilized paved surface on which vehicular traffic can drive.

A. Preparation of Subbase

Subbase preparation shall be completed by others in accordance with Division 20, Section 20.11 - Grading Existing Surfaces with the compaction density modified to ninety-five percent (95%).

B. Placing

The approved RAP material shall be deposited and spread uniformly on the prepared subbase in one uniform layer to the required contour and grades and to such loose depth that when compacted to the density required will achieve the specified thickness. Portions of the layer which become segregated in spreading shall be remixed to the required gradation.

C. Compacting

The RAP shall be compacted to at least ninety-five percent (95%) of maximum density as per AASHTO T-180D. In all places not accessible to the rolling equipment, the mixture shall be compacted with tamping equipment capable of attaining the specified density. Blading, rolling and tamping shall continue until the surface is smooth and free from waves and inequalities. If at any time the mixture is determined to be above or below optimum moisture, it shall be aerated by means of blade graders, harrows or other approved equipment or moisture added until the moisture content is such that the surface can be recompacted and finished as above. In place compaction shall be accomplished with a double-drum vibratory asphalt compactor with a minimum of fifteen thousand (15,000) pounds of dynamic force per drum. All requests for equipment substitution shall require a current certification test, identifying the capability of the equipment to meet the required specifications.

D. Smoothness Test

The surface of the RAP, when finished, shall not show any deviation in excess of three-eighths inch (3/8") when tested with a ten foot (10') straightedge applied parallel with and at right angles to the centerline of the area to be paved. Any deviation in excess of this amount shall be corrected by loosening, adding, or removing material and reshaping and compacting to satisfy the above requirement.

The Contractor shall furnish a ten foot (10') long straightedge and shall, in the presence of the Engineer, straightedge test the entire surface.

E. Seal Coat

The surface of the RAP shall be seal coated in accordance with the provisions in Section 40.02 – Seal Coat. The sealant shall be considered incidental to the cost of RAP construction.

Article 8.4 Measurement

The RAP shall be measured in tons of materials delivered and placed in accordance with these Specifications and adjusted for excess moisture as provided. Said measurement may include moisture up to a maximum of three and one-half percent (3.5%) of dry weight of the material.

When tests by the Engineer indicate that moisture contents in excess of three and one-half percent (3.5%) may be occurring consistently, the frequency of testing will be increased as necessary and the results averaged over a period of one week. When this average is greater than three and one-half percent (3.5%), the tonnage as measured over the above period shall be reduced by the difference. No credit will be due the Contractor when moisture content is less than three and one-half percent (3.5%). Testing will be done in accordance with AASHTO T-255.

Article 8.5 Basis of Payment

Payment for this work shall be in accordance with Division 10, Section 10.07 - Measurement and Payment, and shall include full payment for all Work described in this Section.

Payment shall be made under the following unit:

ITEM	UNIT
Furnish & Install RAP	Ton

SECTION 40.09 BITUMINOUS SURFACE TREATMENT

Article 9.1 Description

The Work under this Section consists of the performance of Work required for the construction of a seal coat of asphalt cement and cover aggregate on an asphalt street surface.

Article 9.2 Asphalt

The Contractor shall submit a certified analysis from the refinery laboratory to the Engineer for review and approval. A copy of the certified analysis shall accompany each shipment of asphalt to the Project. The Engineer shall reserve the right to make check tests of the asphalt received on the Project site, and if the asphalt is not in accordance with the certified analysis, he may reject the material.

The asphalt required by these Specifications shall conform to the requirements of The Asphalt Institute for the type and grade shown below:

Asphalt for Bituminous Surface Treatment	CRS-2

Article 9.3 Aggregates

Aggregate shall consist of crushed gravel and shall be sound, durable, free of adherent coatings of clay, dirt, dust or any other objectionable matter, and shall have a percentage of wear not to exceed forty (40) after five hundred (500) revolutions, as determined by the ASTM C-131. Not less than sixty percent (60%) by weight of crushed gravel shall consist of crushed pieces having two (2) or more faces having freshly fractured face.

Aggregate material shall have the following gradation:

A. Cover - 1st Course

Sieve Designation	Percentage By Weight Passing
3/4"	100
1/2”	90-100
3/8”	40-75
# 4	0-15
# 8	0-5
# 200	0-1

B. Cover Aggregate - 2nd Course

Sieve Designation	Percentage By Weight Passing
3/8”	100
# 4	85-100
# 8	0-25
# 200	0-2

Article 9.4 Equipment

A. General

All equipment used on this Work shall be of sufficient size and in such mechanical condition as to meet the requirements and to produce the Work to the specified quality.

B. Pressure Distributor

The bitumen distributor shall be pneumatic-tired self-propelled, and shall have a capacity of not less than eight hundred (800) gallons. It shall be equipped with an independently-operated bitumen pump, tachometer, pressure gauges, volume metering devices, a thermometer for reading the tank temperature and a hose attachment suitable for applying the bituminous material to spots unavoidably missed by the distributor. The independently-operated bitumen pump shall be equipped with a tachometer calibrated in revolutions per minute. The distributor shall also be equipped to agitate and circulate the bituminous material during the heating process.

Spray bars shall be the circulating type with extensions, available for distributing width from eight to twenty-one feet (8’ to 21’) by one foot (1’) increments. The nozzles shall give uniform distribution and shutoff shall be quick and positive so as to prevent dripping. The distributor shall be designed and equipped to distribute the bituminous material uniformly at consistent surface speeds, at uniform temperatures with various surface widths, at known and maintained rates of five-hundredths (0.05) to two (2.0) gallons per square yard within a tolerance of five percent (5%), and through a pressure range from twenty-five (25) to seventy- five (75) pounds per square inch. Air pressure type equipment may be used only upon written approval from the Engineer.

C. Cover Aggregate Spreader

The spreader shall be self-propelled and capable of spreading the cover material uniformly for widths of eight to sixteen feet (8’ to 16’) in one foot (1’) increments, and adjustable to spread uniform layers of ten (10) to fifty (50) pounds per square yard. Revolving plate type chip spreaders will not be approved.

D. Rollers

Rollers shall be self-propelled, pneumatic-tire, weighing not less than five (5) tons or more than eight (8) tons. Rolling shall follow closely on spreading of aggregate.

E. Hauling Equipment

The cover aggregate shall be transported from the plant to the site in trucks having tight, clean smooth beds.

F. Miscellaneous Equipment

A power broom and all necessary hand tools, thermometers, etc., shall be provided by the Contractor.

Article 9.5 Construction

A. Surface Preparation

The existing road surface shall be graded smooth to the satisfaction of the Engineer. There shall be no visible ruts, holes, or large rocks protruding from the surface to be treated. Existing soft spots in the road base shall be compacted or excavated and backfilled with a suitable base course material. The area to be treated in any one operation shall be as indicated on the Drawings.

B. Weather Limitations

Bituminous material shall not be placed during rainy or threatening weather, or when the moisture on the surface to be treated would prevent satisfactory bond. The surface coats shall not be applied when the air temperature is below fifty degrees (50º) Fahrenheit, unless otherwise approved by the Engineer.

C. Heating and Application of Bituminous Material

Bituminous material shall be heated in such a manner as to insure heating of the entire mass with an efficient and positive control at all times. A curing period of twenty-four (24) hours may be required between the application of the prime coat and the next application of bituminous material, during which time the surface shall be kept in repair. The asphalt for the surface treatment shall be applied at a temperature between one hundred thirty and one hundred eighty degrees (130º and 180º) Fahrenheit and at a rate of 0.30 to 0.45 gallons per square yard for the first coat and 0.25 to 0.40 gallons per square yard for the second coat. Thermometers shall be provided by the Contractor so that temperatures can be observed at all times.

Bituminous material shall be uniformly applied by means of a pressure distributor in the amount per square yard specified. The quantity of material as measured by the volume measuring device of the distributor shall not vary from the true quantity as herein specified by more than five percent (5%). Bituminous material shall not be

applied until sufficient cover aggregate is on hand to cover the area to be applied at a particular application. If the aggregate spreader is delayed by breakdown or operational difficulties, application of bituminous material shall cease until the Engineer is satisfied that delays will not recur.

D. Preparation and Application of Cover Aggregate

Cover material shall be sufficiently dried when it comes in contact with bituminous material so that a satisfactory bond or coating is obtained.

When the prime coat has sufficiently cured, the asphalt for the surface coat shall be applied to the surface. Immediately following this application of bituminous material, the first coat of cover aggregate shall be uniformly spread over the surface with an approved mechanical spreader at a rate of thirty (30) to forty (40) pounds per square yard. A minimum curing period of twelve (12) hours will be required before the second coat of asphalt and cover aggregate is applied. The rate of application of the second coat of cover aggregate shall be twenty (20) to thirty (30) pounds per square yard. Cover material shall be applied continuously and without delay until the particular application is covered. Whenever possible successive strips shall be applied before the previous strip has cooled. Cover material shall not be spread on the six inches (6") adjacent to an unprotected edge until the next strip of bituminous material has been applied. Rolling shall immediately follow the application of each coat of cover aggregate and shall continue until the surface is accepted as determined by the Engineer.

E. Maintenance of Surface

After application of the second coat of cover material, the surface shall be maintained by the Contractor, at his expense, for a period of three (3) days. During this period the Contractor shall, at least once daily, redistribute the cover material that has become displaced by traffic, by means of brooms, a drag or other method satisfactory to the Engineer.

When all possible aggregate has been imbedded in the bituminous material on each course to the satisfaction of the Engineer, the Contractor shall sweep each course surface of all excess material and remove it to a designated area, unless otherwise directed by the Engineer.

Article 9.6 Measurement

Bituminous material and cover aggregate course will be measured by weight in tons (2,000 lbs).

Legible weight tickets shall be submitted to the Engineer for all bituminous material and cover aggregate delivered to the Project site for use in the Work. All weight tickets shall contain, at a minimum, the following information:

1. Weight ticket serial number;

2. Vehicle identification number;
3. The date and time the load was weighed;
4. The tare weight of the vehicle;
5. The gross weight of the loaded vehicle, as registered on the scale; and
6. The legal gross weight of the vehicle, as permitted by Anchorage Municipal Code Sections 9.46.090 or 9.46.100.

The Owner shall not pay for that portion of any load in excess of the legal gross weight for the vehicle.

Article 9.7 Basis of Payment

Payment for this Work shall be in accordance with Division 10, Section 10.07 - Measurement and Payment, and shall include full payment for all Work described in this Section.

Payment shall be made under the following units:

ITEM	UNIT
B.S.T. Asphalt for Prime Coat (Type & Grade)	Ton
B.S.T. Asphalt (Type & Grade)	Ton
B.S.T. Cover Aggregate (1st Coat)	Ton
B.S.T. Cover Aggregate (2nd Coat)	Ton

SECTION 40.10 PAVEMENT ROTOMILLING

Article 10.1 General

The Work under this Section consists of furnishing all plant, labor, supervision, equipment, and material for performing all operations necessary for the removal and disposal of pavement to a depth designated on the Drawings with a power-operated profile machine designed for this specific purpose.

Article 10.2 Construction

Pavement shall be removed by rotomilling, planning, or grinding to a final surface smooth enough for temporary traffic and repaving with no additional preparation other than sweeping and application of a tack coat. Additional rotomilling, grinding, or milling by the power-operated profile machine may be necessary around manhole covers, valve boxes, survey monument cases, etc. The depth of asphalt removal under this Section may vary.

The Contractor shall dispose of the removed pavement tailings at a location designated by the Municipal Street Maintenance Department. The Contractor shall coordinate the exact location with the Street Maintenance Control Center. If the removed pavement material under this Section contains objectionable material within it, as identified by the Engineer, then Contractor shall dispose of this material in accordance with Division 10, Section 10.04, Article 4.9 - Disposal Sites.

Article 10.3 Measurement

Pavement removed by rotomilling, planning or grinding shall be measured by the square yard of pavement designated for and actually removed. No additional payment will be made regardless of depth or additional rotomilling around utility appurtenances.

Article 10.4 Basis of Payment

Payment for this Work shall be in accordance with Division 10, Section 10.07 - Measurement and Payment, and shall include full payment for all Work described in this Section.

Payment shall be made under the following unit:

ITEM	UNIT
Pavement Rotomilling	Square Yard

SECTION 40.11 REMOVE AND REPLACE ASPHALT SURFACING

Article 11.1 Description

The Work under this Section consists of the performance of all Work required for removing, disposing of, and replacing existing asphaltic surfacing or cold mix asphalt, including leveling course and existing traffic markings, as indicated on the Drawings.

Article 11.2 Materials

All materials used shall conform to the requirements of these Specifications and other agencies (if any) having jurisdiction over the pavement being replaced.

Cold mix asphalt material shall be that located at the Kloep Maintenance Station.

Article 11.3 Construction

All construction practices, tests and other controls shall conform to the Division 20 - Earthwork, and this Division.

Contractor shall remove existing asphalt surfacing and leveling course, regardless of thickness. Replacement asphalt surfacing and leveling course thickness shall be shown on the Drawings.

Contractor shall neatly and cleanly saw cut existing asphalt surfacing to be removed prior to removal. Saw cuts shall be a minimum of two inches (2") deep and shall be straight and parallel. If any portion of the remaining asphalt surfacing is undercut by trenching operations, the Contractor shall saw cut, remove, and replace the affected area at his own expense.

Contractor shall apply tack coat to all contact surfaces including curbing, gutters, manholes, and other structures with a thin, uniform coating prior to placing asphalt. Butt joints on previously placed cooled pavement shall be tack coated prior to continuing the paving operation.

Asphaltic concrete paving replacement will be performed by utilizing a mechanical spreader and will be compacted by a mechanical roller weighing not less than ten (10) tons, except that where the area of the asphalt replacement patch is less than one hundred (100) square feet, a mechanical spreader need not be employed.

Small areas inaccessible to roller shall be tamped to produce a compression and surface texture equivalent to that produced by the specified rolling. Hand tampers shall have a maximum tamping face of fifty (50) square inches and a minimum weight of twenty-five (25) pounds.

The Contractor shall replace traffic markings, in kind, in accordance with Division 70, Section 70.10 – Traffic Markings.

Prior to winter shutdown, Contractor shall haul, place, and compact cold mix asphalt on areas where asphalt has been removed. Rejuvenated hot mix asphalt will be supplied by the Municipality of Anchorage at a rate of approximately two (2) tons per hour. The rejuvenated hot mix will be located at the Kloep Maintenance Station, 5701 Northwood Drive. Contractor shall coordinate with Maintenance & Operations Department, Street Maintenance Division, at 343-8277, when the patch can be obtained. Contractor shall haul from the Kloep Maintenance Station to the project site.

Contractor shall keep all asphalt surfacing designated for removal free from objectionable material (concrete, steel, etc.). Contractor shall dispose all removed asphalt surfacing in accordance with Division 10, Section 10.04, Article 4.9 – Disposal Sites. Contractor shall coordinate exact location and time of delivery with the Maintenance & Operations Department, Street Maintenance Division, at 343-8102. If the removed asphalt surfacing, under this Section, contains objectionable material, as identified by the Engineer, Contractor shall dispose of this asphalt surfacing in accordance with Division 10, Section 10.04, Article 4.9 – Disposal Sites.

Article 11.4 Measurement

Removing, disposing of, and replacing existing asphalt surfacing and cold mix asphalt, including leveling course, is measured per square yard, complete in place.

Article 11.5 Basis of Payment

Payment for this Work shall be in accordance with Division 10, Section 10.07 - Measurement and Payment, and shall include full payment for all Work described in this Section.

Payment shall be made under the following units:

ITEM	UNIT
Remove Asphalt , Replace with Municipal-Supplied Hot Mix Asphalt	Square Yard
Remove Asphalt , Replace with Asphalt Surfacing (Class)	Square Yard

SECTION 40.12 IN-PLACE FULL DEPTH RECLAMATION OF ASPHALT CONCRETE PAVEMENT AND LEVELING COURSE

Article 12.1 General

The Work under this Section consists of furnishing all plant, labor, supervision, equipment, and material for performing all operations necessary to complete pulverizing of asphalt concrete pavement, mixing with portions of the underlying granular subbase material, and shaping and compacting the processed materials as a granular base course.

Article 12.2 Material

The operation of full depth reclamation shall ensure that one hundred percent (100%) of the processed material passes the one-inch (1") sieve and not more than seventy-five percent (75%) passes the #4 sieve.

Article 12.3 Construction

Asphalt concrete pavement and a portion of the underlying granular material shall be pulverized/reclaimed, mixed, shaped and compacted to a final surface smooth enough for temporary traffic and paving. The processed material shall be shaped to the lines and thickness shown on the Drawings.

Additional pulverizing of asphalt concrete pavement and mixing with the underlying granular material may be necessary around manhole covers, valve boxes, survey monument cases, etc. The processed materials shall provide a smooth stabilized surface on which to place the new asphalt concrete pavement and shall conform to the compaction and smoothness requirements of this Article.

The Contractor shall dispose of excess processed material in accordance with Division 10, Section 10.04, Article 4.9 - Disposal Sites.

If the Engineer determines that there is insufficient reclaimed material to construct an adequate roadway crown, the Contractor shall obtain Owner-furnished RAP material at 5701 Northwood Drive, Kloep Station, Street Maintenance. The Contractor shall coordinate the pick-up with Street Maintenance.

A. Placing

The approved material shall be deposited and spread uniformly in one uniform layer to the required contour and grades and to such loose depth that when compacted to the density required will achieve the specified thickness. Portions of the layer which become segregated in spreading shall be remixed to the required gradation.

B. Compacting

The processed material shall be compacted to at least ninety-five percent (95%) of maximum density as per AASHTO T-180D. In all places not accessible to the rolling equipment, the mixture shall be compacted with tamping equipment capable of attaining the specified density. Blading, rolling and tamping shall continue until the surface is smooth and free from waves and inequalities. If at any time the mixture is determined to be above or below optimum moisture, it shall be aerated by means of blade graders, harrows or other approved equipment or moisture added until the moisture content is such that the surface can be re-compacted and finished as above. The finished stabilized surface shall be maintained by the Contractor in the above condition until the pavement is applied.

C. Smoothness Test

The surface of the granular base, when finished, shall not show any deviation in excess of three-eighths inch (3/8") when tested with a ten foot (10') straightedge applied parallel with, and at right angles to, the centerline of the area to be paved. Any deviation in excess of this amount shall be corrected by loosening, adding, or removing material and reshaping and compacting to satisfy the above requirement.

Article 12.4 Measurement

Pulverizing of asphalt concrete pavement and mixing with a portion of the underlying granular material, then shaping and compacting the processed materials as a granular base, is measured per square yard, complete in place.

If the Contractor obtains Owner-furnished RAP material from Street Maintenance, payment shall include loading, transportation, placement, and incorporation of the material into the reclaimed surface.

Disposal of surplus material is incidental to the bid item Pavement Reclamation and no additional payment shall be made.

Article 12.5 Basis of Payment

Payment for this Work shall be in accordance with Division 10, Section 10.07 - Measurement and Payment, and shall include full payment for all Work described in this Section.

Payment shall be made under the following unit:

ITEM	UNIT
Pavement Reclamation	Square Yard
Recycled Asphalt Pavement (Owner Furnished)	Ton

SECTION 40.13 PAVEMENT SEAM REPAIR-INFRARED METHOD

Article 13.1 General

The Work described in this Section shall consist of furnishing materials and repairing existing asphalt pavement cuts or seams.

Article 13.2 Materials

If seam repair is shown on the Drawings and/or the Engineer determines that it is necessary, the Contractor shall apply a one-component emulsified maltenes recycling agent (rejuvenator) in a ratio of 1:1 with water. The Contractor shall disperse the solution with a commercial grade sprayer at a rate of eight (8) ounces per square yard of heated area. The rejuvenator application area shall include both the area under repair as well as the area heated but left undisturbed around the perimeter of the repair. The application shall take place after the area has been scarified and just prior to the addition of new asphalt. The rejuvenator replaces the light oil component of asphalt which has oxidized out over time.

Article 13.3 Equipment

A. Infrared Heater: the heating chamber used shall consume no more than 12,500 BTU per square foot of heated area. This rate of consumption shall translate into the ability of the heater to soften asphalt to a depth of 1 ½ -2 ½ inches in 8-10 minutes without burning the surface.

B. Asphalt Storage Unit: a thermostatically controlled storage unit will be utilized to ensure that sufficient hot virgin asphalt is on hand. This unit must ensure that the temperature of the asphalt is never in excess of 325 degrees Fahrenheit.

C. Compactor/Roller: the compaction equipment used will generate at least 2000 lbs. of applied force per square inch.

D. Steel Rake: a steel rake shall be used to delineate the repair area along the chalk line and to scarify the heated area of the patch inside the chalk line to a depth of at least 2 inches.

E. Asphalt Lute: a 36-inch wide lute shall be used to evenly distribute the added asphalt and to establish the proper grade.

Article 13.4 Construction

A. Heating the Repair Area:

1. Contractor shall sweep area clean of dirt, loose aggregate, or standing water.
2. Contractor shall lower the infrared chamber over the repair allowing at least twelve to eighteen inches (12”-18”) of heated area beyond the perimeter of the original opening.
3. The Contractor shall check the surface temperature of the asphalt at seven minutes and every minute thereafter using an infrared thermometer to ensure the proper heating time. The surface temperature shall not exceed three

hundred and fifty degrees Fahrenheit (350ºF). Heating time is influenced by: ambient temperature, color of the pavement, size of the aggregate, and moisture content.

4. After the appropriate heating time (typically eight to ten (8-10) minutes), the asphalt surface will be softened to a depth of two to two and a half inches (2”-2.5”).
5. The Contractor shall then remove the infrared chamber from the heated area.

B. Raking the Heated Area:

1. The Contractor shall use the backside of a steel rake to neatly square off the repair; cutting six to twelve inches (6”-12”) back from the damage along the chalk line.
2. The Contractor shall then deeply scarify the area inside the repair, taking special care to eliminate the original seam between the repair and the road.
3. If needed, the Contractor shall apply the maltenes rejuvenator to the repair and the surrounding heated asphalt surface.

C. Adding Plant Mix Asphalt:

1. If required, the Contractor shall add State I-5 (1/4 - 3/8 inch aggregate) to the area to bring it up to proper grade.
2. The Contractor shall spread a light coating of stone dust over the repair to remove the tackiness. The road can then be opened to traffic.

Note: the total time for a typical single heat restoration should be no more than 20-25 minutes. This timeframe shall be strictly adhered to so as to ensure that both the heated pavement and added asphalt have not been allowed to cool significantly. This provides the proper fusion between the repair and the existing road surface.

Article 13.5 Measurement

The Pavement Seam Repair shall be measured per seam or cut identified, complete and accepted. There shall be no separate measurement or payment for asphalt, tack coat, or materials required to seam repair as they are considered incidental to this Work.

Article 13.6 Basis of Payment

Payment for this Work shall be in accordance with M.A.S.S. Division 10, Section 10.07 – Measurement and Payment, and shall include full payment for all Work described in this Section.

Payment shall be made under the following unit:

ITEM	UNIT
Pavement Seam Repair	Each

MUNICIPALITY OF ANCHORAGE
STANDARD SPECIFICATIONS

DIVISION 40
ASPHALT SURFACING
STANDARD DETAILS

STANDARD CONSTRUCTION SPECIFICATIONS
MISCELLANEOUS
DIVISION 40
INDEX OF STANDARD DETAILS

40-1 Typical Resurfacing Detail - Gravel

40-2 Typical Resurfacing Detail - Non-Gravel Surfaces

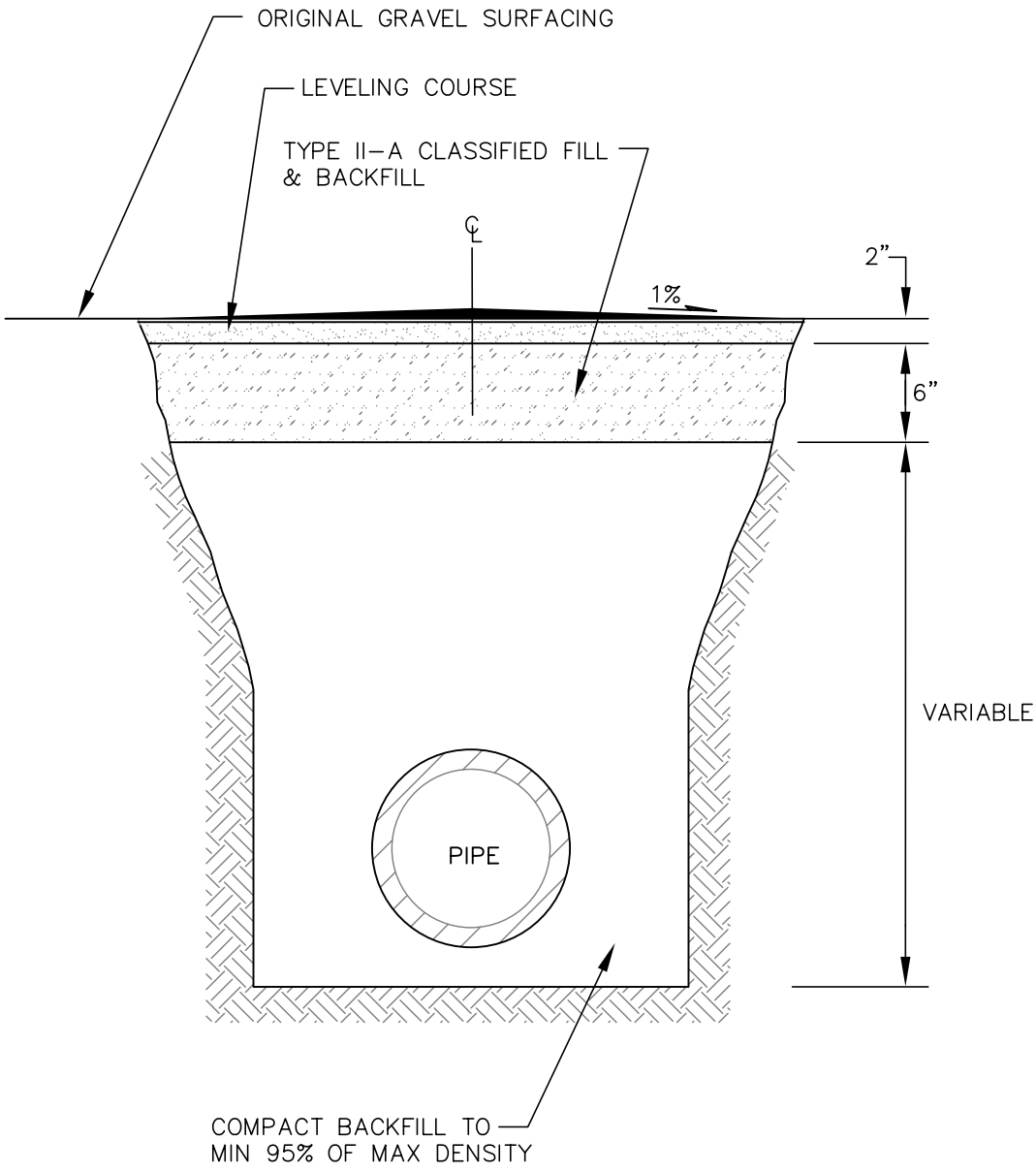

NOTE:

1. CONTRACTOR SHALL CONSTRUCT A 1% CROWN WITH THE PEAK CENTERED OVER THE CENTERLINE OF THE EXCAVATION.

MUNICIPALITY OF ANCHORAGE	SCALE: NTS APPROVED: REVISED: 10/07	**TYPICAL RESURFACING DETAIL GRAVEL**	SECTION # 40.11 DETAIL # 40–1

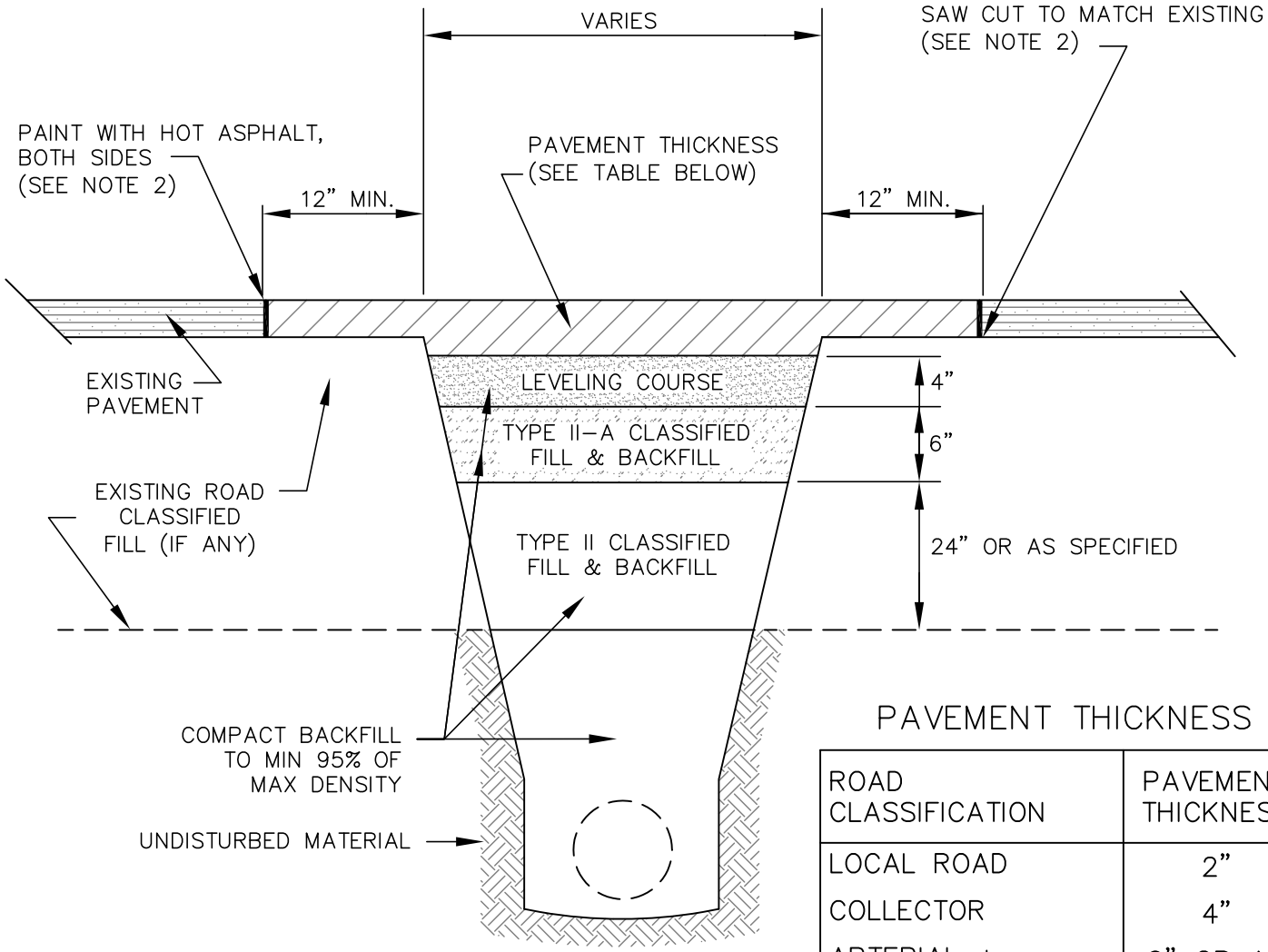

PAVEMENT THICKNESS

ROAD CLASSIFICATION	PAVEMENT THICKNESS
LOCAL ROAD	2"
COLLECTOR	4"
ARTERIAL +	6" OR AS SPECIFIED

NOTES:

1. ENGINEER OR PERMITTING AGENCY MAY DIRECT ADDITIONAL AMOUNTS OF SURFACE REPLACEMENT MATERIALS AND/OR TYPE II CLASSIFIED FILL & BACKFILL, BASED UPON FIELD CONDITIONS.
2. AFTER TRENCH BACKFILL HAS BEEN COMPACTED, CONTRACTOR SHALL SAW CUT (REF. SECTION 40.06.5.J) AND REMOVE AN ADDITIONAL 12" FROM EACH EDGE OF THE ORIGINAL CUT. ENGINEER MAY REQUIRE ADDITIONAL REMOVAL IF THE EXISTING SURFACING HAS BEEN LIFTED IN THE REMOVAL PROCESS OR IF THE JOINT DOES NOT OCCUR ON UNDISTURBED MATERIAL. TRIM AND SQUARE THE EDGES OF EXISTING SURFACING, AND REMOVE LOOSE MATERIALS BEFORE PLACING PAVEMENT. CONTRACTOR SHALL PAINT SURFACES AND EDGES OF EXISTING PAVEMENT WITH HOT ASPHALT CEMENT AS SPECIFIED IN THE CONTRACT DOCUMENTS OR AS APPROVED BY THE ENGINEER.
3. MAXIMUM PAVEMENT LIFT THICKNESS IS 2" UNLESS OTHERWISE SPECIFIED IN THE DRAWINGS OR APPROVED BY THE ENGINEER.
4. THIS DETAIL APPLIES TO ALL NON-GRAVEL SURFACES INCLUDING, BUT NOT LIMITED TO, PAVEMENT, RECYCLED ASPHALT PAVEMENT (RAP), AND BITUMINOUS SURFACE TREATMENT, ALSO KNOWN AS CHIP SEAL.

MUNICIPALITY OF ANCHORAGE	SCALE: NTS APPROVED: REVISED: 2/12	**TYPICAL RESURFACING DETAIL NON-GRAVEL SURFACES**	SECTION # 40.11 DETAIL # 40-2

REVISION: 2/2012 FIXED TYPO IN NOTE 3 TO 2", FIXED REFERENCE IN NOTE 2

MUNICIPALITY OF ANCHORAGE
STANDARD SPECIFICATIONS

DIVISION 50
SANITARY SEWERS

STANDARD CONSTRUCTION SPECIFICATIONS
FOR SANITARY SEWERS
DIVISION 50
INDEX

SECTION 50.01	GENERAL	1
Article 1.1	Scope of Work	1
Article 1.2	Applicable Standards	1
Article 1.3	Surveys	2
Article 1.4	Concrete and Mortar	2
Article 1.5	Insulation	3
Article 1.6	Payment - General	3
SECTION 50.02	FURNISH AND INSTALL PIPE	4
Article 2.1	Description	4
Article 2.2	Materials	4
Article 2.3	Construction	5
Article 2.4	Testing	9
Article 2.5	Measurement	12
Article 2.6	Basis of Payment	12
SECTION 50.03	SANITARY SEWER MANHOLES	13
Article 3.1	General	13
Article 3.2	Material	13
Article 3.3	Construction	14
Article 3.4	Measurement	16
Article 3.5	Basis of Payment	16
SECTION 50.04	WATERTIGHT MANHOLE FRAMES AND COVER	18
Article 4.1	General	18
Article 4.2	Material	18
Article 4.3	Construction	18
Article 4.4	Measurement	18
Article 4.5	Basis of Payment	18
SECTION 50.05	CONNECTIONS TO EXISTING SANITARY SEWER MANHOLES	19
Article 5.1	General	19
Article 5.2	Construction	19
Article 5.3	Measurement	19
Article 5.4	Basis of Payment	20
SECTION 50.06	CONSTRUCT SANITARY SEWER DROP CONNECTION	21
Article 6.1	General	21
Article 6.2	Materials	21
Article 6.3	Construction	21
Article 6.4	Measurement	21
Article 6.5	Basis of Payment	21

SECTION 50.07 CONSTRUCT BEAVER SLIDE 22
Article 7.1 General 22
Article 7.2 Material 22
Article 7.3 Construction 22
Article 7.4 Measurement 22
Article 7.5 Basis of Payment 22

SECTION 50.08 LATERAL CONNECTION TO EXISTING PIPE 23
Article 8.1 General 23
Article 8.2 Construction 23
Article 8.3 Measurement 23
Article 8.4 Basis of Payment 23

SECTION 50.09 DEEP SANITARY SEWER SERVICE RISERS 24
Article 9.1 General 24
Article 9.2 Material 24
Article 9.3 Construction 24
Article 9.4 Measurement 24
Article 9.5 Basis of Payment 24

SECTION 50.10 SANITARY SEWER SERVICE CONNECTIONS 25
Article 10.1 General 25
Article 10.2 Material 25
Article 10.3 Construction 25
Article 10.4 Measurement 27
Article 10.5 Basis of Payment 28

SECTION 50.11 REMOVE AND DISPOSE OF EXISTING CESSPOOLS OR SEPTIC TANKS AND CONNECT EXISTING SERVICE 29
Article 11.1 General 29
Article 11.2 Construction 29
Article 11.3 Measurement 29
Article 11.4 Basis of Payment 30

SECTION 50.12 CONSTRUCT SANITARY SEWER CLEANOUT 31
Article 12.1 General 31
Article 12.2 Material 31
Article 12.3 Construction 31
Article 12.4 Measurement 31
Article 12.5 Basis of Payment 31

SECTION 50.13 POLYETHYLENE ENCASEMENT 32
Article 13.1 General 32
Article 13.2 Material 32
Article 13.3 Construction 32
Article 13.4 Measurement 32
Article 13.5 Basis of Payment 33

SECTION 50.14 BYPASS PUMPING SANITARY SEWAGE FLOWS 33
Article 14.1 General 33
Article 14.2 Materials 33
Article 14.3 Construction 35
Article 14.4 Measurement 37
Article 14.5 Basis of Payment 37

SECTION 50.15 ON-PROPERTY SANITARY SEWER SERVICE 38
Article 15.1 Description 38
Article 15.2 Material 38
Article 15.3 Construction 38
Article 15.4 Measurement 38
Article 15.5 Basis of Payment 39

SECTION 50.16 MANHOLE REHABILITATION 40
Article 16.1 Description 40
Article 16.2 Material 40
Article 16.3 Construction 40
Article 16.4 Measurement 42
Article 16.5 Basis of Payment 43

SECTION 50.17 RAISE OR LOWER SEWER SERVICE 44
Article 17.1 General 44
Article 17.2 Construction 44
Article 17.3 Measurement 44
Article 17.4 Basis of Payment 44

SECTION 50.18 ADJUST SANITARY SEWER MANHOLE CONE TO FINISH GRADE 45
Article 18.1 General 45
Article 18.2 Material 45
Article 18.3 Construction 45
Article 18.4 Measurement 45
Article 18.5 Basis of Payment 46

SECTION 50.19 ADJUST SANITARY SEWER MANHOLE RING TO FINISH GRADE 47
Article 19.1 General 47
Article 19.2 Material 47
Article 19.3 Construction 47
Article 19.4 Measurement 47
Article 19.5 Basis of Payment 48

SECTION 50.20 REMOVE EXISTING SANITARY SEWER MANHOLE 49
Article 20.1 General 49
Article 20.2 Construction 49
Article 20.3 Measurement 49
Article 20.4 Basis of Payment 49

SECTION 50.21 ADJUST CLEANOUT TO FINISH GRADE 50
Article 21.1 General 50
Article 21.2 Material 50
Article 21.3 Construction 50
Article 21.4 Measurement 50
Article 21.5 Basis of Payment 50

SECTION 50.22 SEWER CLOSED CIRCUIT TELEVISION INSPECTIONS 51
Article 22.1 General 51
Article 22.2 Material 51
Article 22.3 Construction 52
Article 22.4 Measurement 55
Article 22.5 Payment 55

STANDARD CONSTRUCTION SPECIFICATIONS
FOR SANITARY SEWERS
DIVISION 50

SECTION 50.01 GENERAL

Article 1.1 Scope of Work

The Work covered by these Specifications consists of providing all plant, labor, equipment, supplies, material, transportation, handling and storage, and performing all operations necessary to complete the construction for pipe laying, jointing, and testing of sanitary sewers.

Requirements for earthwork including trench excavating and backfill are specified in Division 20 - Earthwork.

Article 1.2 Applicable Standards

The latest revision of the following standards of the American Society of Testing and Materials (ASTM), the American Association for State Highway and Transportation Officials (AASHTO), the American Standards Association (ASA), and the American Water Works Association (AWWA) are hereby made a part of these Specifications.

AASHTO M45	Standard Specification for Aggregate for Masonry Mortar
AASHTO M306	Standard Specification for Drainage, Sewer, Utility, and Related Castings
ASTM A48	Specifications for Gray Iron Castings
ASTM A74	Standard Specification for Cast Iron Soil Pipe & Fittings
ASTM 438	Traverse Testing of Gray Cast Iron
ASTM A746	Specification for Ductile Iron Gravity Sewer
ASTM C14 or ASTM C14M [Metric]	Specification for Concrete Sewer, Storm Drain and Culvert Pipe
ASTM C76 or ASTM C76M [Metric]	Specification for Reinforced Concrete Culvert, Storm Drain and Sewer Pipe
ASTM C150	Specification for Portland Cement
ASTM C206	Specification for Finishing Hydrated Lime
ASTM C443 or ASTM C443M [Metric]	Specification for Joints for Circular Concrete Sewer & Culvert Pipe, Using Rubber Gaskets

ASTM C564	Standard Specifications for Rubber Gaskets for Cast Iron Soil Pipe & Fittings
ASTM C923	Standard Specification for Resilient Connectors Between Reinforced Concrete Manhole Structures, Pipes & Laterals
ASTM D256	Test Methods for D-C Resistance of Plastics and Electrical Insulating Materials
ASTM D2321	Recommended Practice for Underground Installation of Thermoplastic Sewer Pipe
ASTM D3034	Specification for Type of PSM Poly (Vinyl Chloride) (PVC) Sewer Pipe and Fittings
ASTM D3035	Specification for Polyethylene (PE) Plastic Pipe (SDR-PR) Based on Controlled Outside Diameter
ASTM D3350	Specification for Polyethylene Plastic Pipe and Fittings Materials
AASHTO M45	Sand for Cement Mortar
AWWA C104/ ANSI A21.4	Cement-Mortar Lining for Ductile-Iron Pipe and Fittings for Water
AWWA C105/ ANSI A21.5	Polyethylene Encasement for Ductile Iron Piping for Water and Other Liquids
AWWA C110/ ANSI A21.10	Ductile-Iron and Gray-Iron Fittings, 3 in. Through 48 in., for Water and Other Liquids
AWWA C111/ ANSI A21.11	Rubber-Gasket Joints for Ductile-Iron and Gray-Iron Pressure Pipe and Fittings
AWWA C151/ ANSI A21.51	Ductile-Iron Pipe, Centrifugally Cast in Metal Molds or Sand-Lined Molds, for Water or Other Liquids
AWWA C600	AWWA Standard for Installation of Ductile-Iron Water Mains and Their Appurtenances
AWWA C901	Standard for Polyethylene (PE) Pressure Pipe and Tubing, 1/2 in. Through 3 in., for Water Service
AWWA C900	Polyvinyl Chloride (PVC) Pressure Pipe and Fabricated Fittings, 4 inch through 12 inch for Water Transmission and Distribution
AWWA C905	Polyvinyl Chloride (PVC) Pressure Pipe and Fabricated Fittings, 14 inch through 48 inch for Water Transmission and Distribution
UPC	Uniform Plumbing Code, latest edition adopted by the Municipality, and current local amendments

Article 1.3 Surveys

Survey shall be performed by the Contractor per Division 65 - Construction Survey.

Article 1.4 Concrete and Mortar

A. Miscellaneous Concrete

All concrete used in the construction of sanitary sewer systems with the exception of precast manholes, manhole risers, cones, and reinforced concrete pipe shall be Class A-3. Concrete Work shall conform to Division 30 - Portland Cement Concrete.

B. Mortar

Cement for mortar used in the construction of sanitary sewer systems shall conform with the requirements of ASTM C-150, Type II. Sand shall conform with the requirements of AASHTO M-45. The mortar shall be composed of one (1) part cement and three (3) parts sand. The addition of lime is not permitted. The use of five (5) minute or fast-cure mortar is prohibited.

Article 1.5 Insulation

Rigid board insulation required for frost protection of sanitary sewer mains and services shall be as specified on the drawings and comply with Division 20, Section 20.26 – Insulation, and Standard Detail 20-9.

Article 1.6 Payment - General

Payment for all Work included in this Division shall be paid for in accordance with Division 10, Section 10.07 - Measurement and Payment and shall include full payment for all Work described.

SECTION 50.02 FURNISH AND INSTALL PIPE

Article 2.1 Description

The Work under this Section consists of the performance of all operations pertaining to furnishing and installing pipe for sanitary sewer systems.

Article 2.2 Materials

A. General

All piping shall be in accordance with the Contract Documents conforming to the size and class shown and specified. Changes in class shall be made within one-half of a pipe length of the station indicated on the Drawings. The use of pipe containing asbestos materials shall be prohibited.

Detectable underground warning tape is required for installation of all pipe types. Warning tape must not be less than five (5) mil, foil backed, six inches (6") wide vinyl tape, colored green, with "Caution Buried Sewer Line Below" continuously printed in black along the tape length. The warning tape must be continuously laid with the pipe and be at least eighteen inches (18") and no more than thirty six inches (36") above the pipe.

Tracer wire must be installed on all non-metallic pressure sewer pipe. Tracer wire must be suitable for direct bury and be 10 AWG with 30-mil HDPE jacket colored green. Trace wire must be continuous. When allowed by the Engineer, splices must use copperhead industries connector, part #3WB-01 or equal. Tracer wire must be brought to the surface near sewer structures

B. Ductile Iron Pipe

Ductile iron pipe shall conform to requirements of ASTM A-746 (AWWA C-151) and Cement Mortar shall conform to the requirements of AWWA C-104. Class 50 pipe shall be used, unless otherwise required by the Contract Documents. Fittings shall be cast iron or ductile iron and all bells conforming to AWWA C-104 except that so called "short body" fittings, otherwise meeting AWWA Specifications may be used. Rubber gasket joints for ductile iron pipe fittings shall conform to the requirements of AWWA C-111.

C. Cast Iron Pipe

All cast iron pipe and fittings shall be hub and spigot service weight soil pipe meeting the requirements of ASTM A74. Gaskets shall meet the requirements of ASTM C564.

D. Concrete Pipe and Fittings

Reinforced concrete pipe and fittings shall conform to the requirements of ASTM C-76. Non-reinforced concrete sanitary sewer pipe shall conform to the requirements of ASTM C-14.

E. Concrete Pipe Joints

Joints for concrete pipe shall conform to the requirements of ASTM C-14 and ASTM C-443. Joints shall be of the "O" Ring type and shall be subject to the approval of the Engineer as to configuration. All repair clamps shall be approved stainless steel clamps.

F. High Density Polyethylene Pipe (HDPE)

High Density Polyethylene Pipe (HDPE) and fittings shall be manufactured in accordance with AWWA C906. HDPE shall be manufactured from PE4710 polyethylene compounds that meet or exceed ASTM D3350 Cell Classification 445574. All HDPE pipe and fittings shall be certified by the NSF for potable water service. HDPE pipe and fitting material compound shall contain color and ultraviolet (UV) stabilizer meeting or exceeding the requirements of Code C per ASTM D3350. Electrofusion fittings shall comply with ASTM F1055. All fittings shall have pressure class ratings not less than the pressure class rating of the pipe to which they are joined.

The pipe shall be homogeneous throughout and free of visible cracks, holes, foreign inclusions or other injurious defects. It shall be uniform in color, opacity, density and other physical properties.

Butt fusion of the pipe and fittings shall be performed in accordance with the pipe manufacturer's recommendations as to equipment and technique. The fusion operation shall be performed by an individual who has demonstrated the ability to fuse polyethylene pipe in the manner recommended by the pipe supplier. The pipe supplier shall supply a representative to instruct the Contractor's crew on Butt Fusion and installation and witness the first twenty joints.

Alternate coupling methods for HDPE pipe shall not be used unless accepted by the Engineer in conformance with the requirements of Division 10, Section 10.05, Article 5.7 - Materials. Any request to consider an alternate coupling method in the Work and/or approval of its use, should it be accepted, shall not cause an increase in the cost of the Work to the Owner.

G. Polyvinyl Chloride Pipe (PVC)

Four inch (4”) through twelve inch (12”) Polyvinyl Chloride Pipe must conform to the requirements of AWWA C900 and as otherwise required by the Contract Documents. DR 18 pipe must be used for C900 PVC pipe, unless otherwise specified.

Fourteen inch (14”) through forty-eight inch (48”) Polyvinyl Chloride Pipe must conform to the requirements of AWWA C905 and as otherwise required by the Contract Documents. DR 21 must be used for C905 PVC pipe, unless otherwise specified.

H Copper, Type K pipe

Copper, Type K pipe may only be used on pressure single family residential sewer systems and must be a minimum size of two inches (2”).

Article 2.3 Construction

A. Excavation and Backfill

Excavation and backfill for furnishing and installation of sanitary sewer pipe shall be in accordance with Division 20, Section 20.13 - Trench Excavation and Backfill.

The Contractor shall remove and dispose of all sewage-saturated soils encountered within the trench area. All sewage-saturated soils shall be considered unsuitable material. Sewage-saturated soils may not be used as fill material anywhere within the Municipality and shall be disposed of at the Municipal Landfill. There shall be no separate payment for removal and disposal of sewage-saturated soils. Removal and disposal of sewage-saturated soils shall be considered incidental to the pay item: Furnish and Install Pipe

B. Pipe Grade and Alignment

Variance of individual pipe sections from established line and grade shall not be greater than those listed in the table below, providing that such variance does not result in a level or reverse sloping invert.

Diameter (Inches)	Allowance Tolerance (Feet)
8	0.03
10	0.03
12	0.03
14	0.04
16	0.04
18*	0.05

*Note: For all pipe sizes over eighteen inches (18") in diameter, variance shall not exceed five hundredths feet (0.05').

During the progress of the Work, the Contractor shall provide instruments such as transits, levels, laser devices, and other facilities for transferring grades from offset hubs or for setting of batter boards or other construction guides from the control

points and bench marks provided by the Contractor. The Contractor shall provide qualified personnel to use such instruments and who shall have the duty and responsibility for placing and maintaining such construction guides. The Contractor shall notify the Engineer 48 hours prior to taking measurements on newly installed section of line and/or appurtenances for Record Documents.

If the method of transferring grades from the offset hubs to the pipe require batter boards, they shall be at least one by six inches (1" x 6") supported on two by four inch (2" x 4") stakes or approved metal rods and shall be placed every twenty-five feet (25'). At least three boards must be in place at any given time to facilitate checking of line and grade. Both line and grade shall be checked and recorded in a field book for each piece of pipe laid, except at tunnels where methods acceptable to the Engineer shall be used to carry forward line and grade.

The practice of pushing in uncompacted backfill over a section of pipe to provide a platform for transit and level alignment and grade observations shall be subject to the approval of the Engineer. If intermittent backfilling is allowed, backfilling shall be accomplished in accordance with Division 20, Section 20.13 - Trench Excavation and Backfill.

C. Pipe Laying

All pipe shall be laid with Class E bedding as outlined in MASS. Bedding must be laid the full width of the ditch and compacted to a minimum of ninety-five percent (95%) of the maximum density, unless otherwise required by the Contract Documents or directed by the Engineer.

Pipe laying shall in all cases proceed upgrade with the spigot ends of the pipe pointing in the direction of the flow. Each pipe shall be laid true to line and grade and in such a manner as to form a close concentric joint with the adjoining pipe. The alignment of the installed pipe shall appear straight to visual observation and shall be such that a full circle of light can be seen between manholes, etc., when sighting along all points of the pipe circumference. Each section of pipe shall be handled carefully and placed accurately; each pipe shall be joined in accordance with the pipe manufacturer's recommended standards. Each section of pipe shall be properly supported to ensure true alignment and an invert which is smooth and free from roughness or irregularity.

The Contractor shall stagger the joints for sanitary sewer pipe such that no sewer pipeline joint shall be closer than nine feet (9') measured horizontally (outside of pipe to outside of pipe) from its intersection with either water mains or water services encountered in the Work.

The Contractor shall take every precaution to preclude foreign debris from entering the sanitary sewer system. Temporary screening techniques of the downstream manholes proposed for use by the Contractor shall first be reviewed and approved by the Engineer prior to their use in the Work. Contractor shall be responsible for removing and cleaning any foreign debris that enters the sanitary sewer system. All costs associated with the removal of foreign debris from the sanitary sewer system resulting from the Contractor's activities shall be considered incidental to the Contract.

At all times, when Work is not in progress, open ends of pipe and fittings shall be securely and satisfactorily closed so that no undesirable substance will enter the pipe or fittings.

Where a project outfalls into an existing sanitary sewer, construction of physical connection to the existing line shall be delayed until all upstream underground construction, including exfiltration testing, is complete and accepted unless special permission is granted by the Owner. Care shall be exercised during construction, flushing, and testing operations of the connecting link to assure that water or any foreign debris is not diverted into any portion of a sanitary sewer line in service or a sanitary sewer line which is not a portion of the construction project for which the Contractor is responsible.

Pipe shall not be laid when the bottom of the ditch or the sides to one foot (1') above the pipe are frozen. Backfill material shall not contain frozen material. The trench shall not be left open during freezing weather so that the temperature of the material near the pipe goes below freezing.

All ductile iron pipe shall be encased in one layer of polyethylene encasement in accordance with Section 50.13 - Polyethylene Encasement.

D. Bedding of Sanitary Sewer Pipe

Sanitary sewer pipe and sanitary sewer service connection bedding is to extend six (6) inches below and above the pipe and constructed in accordance with Division 20, Section 20.13 – Trench Excavation and Backfill and Standard Detail 20-8. Bedding material is to be Class 'E'.

E. Laying Instructions for Concrete Pipe with "O" Ring Bell End Joint

To allow a watertight joint and to insure an installation which will allow the pipe to perform as designed, the following recommendations of the pipe manufacturer shall be observed.

1. Spigot groove and bell surface shall be clean and free of foreign material.
2. Apply joint lubricant freely to the bell including the tapered surface and completely coat the rubber gasket.
3. After placing gasket in groove, run a small tool completely around between gasket and groove to equalize gasket stretch.
4. Exercise care at first contact of the pipe. Avoid bumping which may damage spigot. Stop any swaying motion before contact is made.
5. To couple pipe, insert spigot slowly and carefully straight into bell, to allow the gasket to cushion the initial contact and center the spigot as it enters the tapered portion of the bell.
6. Complete joint should have spigot against inside bell shoulder. Inside joint space should not exceed one-half inch (1/2") for straight runs. Pulled joint deflections for alignment change shall comply with pipe manufacturer's recommended deflection limits.

7. Check all around pipe for rolled or "fishmouthed" gaskets after coupling.

8. Do not pick up and drop coupled pipe to adjust grade.

9. Ensure that the pipe is not supported only at the bell nor is the pipe barrel resting on a high spot. The bottom quarter of the pipe shall be uniformly supported through its length in order for the pipe to resist the design loads.

F. Laying Instructions for Other Pipe

All other pipe shall be laid in accordance with the manufacturer's published recommendations.

Article 2.4 Testing

A. General

The Contractor shall clean and flush all sanitary sewer pipe installed prior to testing and substantial completion inspection. Sewer main and service trenches shall be substantially backfilled and compacted.

All sanitary sewer pipe installed shall be subject to either an infiltration test or an exfiltration test. In those areas where, in the opinion of the Engineer, the water table is high enough to subject the pipe to a satisfactory infiltration test, it is not anticipated that an exfiltration test shall be required. In checking leakage, there will be no allowance made for external hydrostatic head.

Where in the opinion of the Engineer, the water table is not high enough to provide a satisfactory infiltration test, an exfiltration test shall be required.

The type of test (either infiltration or exfiltration) shall be determined by the Engineer. The Contractor shall have the option of choosing only one method (air or water) of testing for each section tested.

All wyes, tees, or ends of side sanitary sewer stubs and service connections shall be plugged or capped and the plug or cap shall be securely fastened to withstand the internal test pressures. Such plugs or caps shall be readily removable and their removal shall provide a socket suitable for extending the lateral connection.

All testing shall be considered a subsidiary obligation under Furnish and Install Pipe and is considered incidental to the Contract.

The Contractor shall take precaution to prevent sewage from entering the new sanitary sewer pipeline until it has been inspected, tested and accepted for operation by the Engineer. The Contractor may request inspection, testing and acceptance of incremental segments of the Work. An incremental segment shall be considered a mainline sanitary sewer with a completed manhole or cleanout at each end.

B. Exfiltration Test (Using Water)

On completion of a section of sanitary sewer between manholes or otherwise, the Engineer shall require that the ends of all pipe be plugged, including service

connections, and the pipe subjected to a hydrostatic pressure. Generally all testing is to be conducted after backfilling, prior to resurfacing and after service connections are made.

A minimum head of six feet (6') of water above the crown at the upper end of the test section shall be maintained for a period of four (4) hours during which time it will be presumed that full absorption of the pipe body has taken place and thereafter for a further period of one (1) hour for the actual test of leakage. During this one-hour period, the measured loss shall not exceed the rate of fifty (50) gallons per inch diameter per mile per twenty-four (24) hours.

The above listed leakage rate shall also be applied to infiltration from ground water and infiltration or exfiltration in greater amounts will be cause for rejection of the sanitary sewer and all repairs necessary to meet these requirements and retesting shall be at the expense of the Contractor.

The maximum length of sanitary sewer for the above allowable leakage test shall be one thousand feet (1,000'). If it is not apparent that leakage test results between any two (2) manholes is satisfactory, then the Engineer may require subsequent tests to establish the more exact location of the leakage areas. Any section of sanitary sewer between any two (2) manholes that does not meet the above requirements shall be rejected and the Contractor, at his expense, shall make the necessary repairs to the sanitary sewer to meet the requirements, and shall make subsequent tests after repairs to assure compliance with the Specifications.

C. Exfiltration Test (Using Air)

The Contractor shall furnish all facilities and personnel for conducting the test under the observation of the Engineer. The equipment and personnel shall be subject to the approval of the Engineer. Joints only may be tested in pipe thirty-six inches (36") in diameter, or larger at the option of the Contractor.

The Contractor may desire to make an air test prior to backfilling for his own purpose. However, the acceptance air test shall be made after backfilling has been completed, and compacted.

Immediately following the pipe cleaning, the pipe installation shall be tested with low-pressure air. Air shall be slowly supplied to the plugged pipe installation until the internal air pressure reaches four (4.0) pounds per square inch greater than the greatest back pressure of any ground water in contact with the pipe. At least two (2) minutes shall be allowed for temperature stabilization before proceeding further.

The pipeline shall be considered acceptable when tested at an average pressure of four (4.0) pounds per square inch greater than the greatest back pressure of any ground water in contact with the pipe, if:

The total rate of air loss from any section tested in its entirety between manholes or between manholes and cleanout structures does not exceed two (2.0) cubic feet per minute, or the following table may be utilized as a guideline for a satisfactory test by air for pipe sizes shown:

Pipe Diameter	Allowable Pressure Drop in 10 Minutes
8"	2.7 PSI
10"	2.1 PSI
12"	1.8 PSI
15"	1.4 PSI
18"	1.2 PSI
24"	0.9 PSI

Pressure gauges shall be incremented in not more than 1/2 pound increments for accurate tests.

If the pipe installation fails to meet test requirements, the Contractor shall determine at his own expense the source or sources of leakage, and he shall repair (if the extent and type of repairs proposed by the Contractor are acceptable to the Engineer), or replace all defective materials or Workmanship. The completed pipe installation shall meet the requirements of this test or the alternative water exfiltration test before being considered acceptable.

Safety braces shall be required to hold plugs in place and to prevent the sudden release of the compressed air. Due to the large forces that could be exerted by an escaping plug during the testing of the pipe, workmen shall not be allowed in the manholes in which plugs have been placed while tests are being conducted. The Contractor's testing equipment shall be arranged in such a manner that a pressure relief device will prohibit the pressure in the pipeline from exceeding 10 PSI.

D. Infiltration Test

Infiltration testing may be allowed at the Engineer's option when the natural ground water table is six feet (6') above the crown of the higher end of the test section. The maximum allowable limit for infiltration shall not exceed the rate of fifty (50) gallon per inch diameter per mile per twenty-four (24) hours.

The Contractor shall furnish all tools, equipment, and labor necessary to complete the tests and shall verify from his own observations, or preliminary tests, that each line conforms with this Specification before requesting the Engineer to observe and record the actual leakage.

The Engineer may require the Contractor to repair obvious leaks even though the total length of the test section falls within the maximum allowable leakage for the test used.

E. Check of Line and Grade

After backfilling and cleaning, but before final acceptance, all sections of installed line may be checked for line and grade. Excluding service connections, all size sanitary sewer pipes thirty inches (30") and smaller in diameter may be checked for line and grade by closed circuit television. A full circle of light must be seen and no pipe misplaced in line or grade. A physical inspection of the interior of all sanitary sewer line thirty inches (30") in diameter and above will be made before acceptance. Any excess deviation in line and grade shall be corrected by the Contractor prior to Final Acceptance of the Project.

Article 2.5 Measurement

Measurement for furnishing and installing sewer pipe shall be per linear foot of horizontal distance of the various sizes as set forth in the Bid Schedule. Measurement will be from center to center of manholes or from center of manhole to center of cleanout bend.

Article 2.6 Basis of Payment

Payment for this Work shall be in accordance with Division 10, Section 10.07 - Measurement and Payment, and shall include full payment for all Work described in this Section.

Unless specifically identified for payment under a separate bid item, the unit price bid for Furnish and Install Pipe (size, shape, type material, class, and/or gauge) shall include all labor, equipment, and materials to furnish and install a functional sanitary sewer system including but not limited to the following incidental items: asphalt surfacing removal and replacement; concrete sidewalk, curb, and/or gutter removal and replacement; clearing and grubbing; trench excavation and backfill; excavation dewatering; trench support system; furnishing and installing Class E bedding; compaction; installation of pipe, fittings, adapters, or other necessary appurtenances; polyethylene encasement; surveying; testing; disposal of unusable or surplus material; protection, bracing and/or shoring of existing utilities; restoration of existing drainage patterns; removal and replacement of existing culverts, fences, landscaping, and other public or private improvements or natural features impacted by the Work; finish grading; and cleanup.

Unit cost payment shall be made on the following basis:

ITEM	UNIT
Furnish and Install Pipe (Size, Shape, Type Material, Class and/or Gauge)	Linear Foot

SECTION 50.03 SANITARY SEWER MANHOLES

Article 3.1 General

The Work under this Section consists of the performance of all operations pertaining to the construction and installation of sanitary sewer manholes complete with frames and covers.

Article 3.2 Material

Materials used in the construction of manholes shall conform to the requirements of ASTM C-478 (AASHTO-199) and the Standard Details. Cones shall be eccentric, unless otherwise approved.

Except as shown otherwise, the base is to be integrally cast with the first section. Reinforcement steel is to be installed through the transition from the base to the vertical walls of the manhole.

Rubber waterstops used in pipe-to-manhole joints, shall be rings of resilient material that will fit snugly over a pipe. The resilient material shall be held firmly against pipe surface by means of a stainless steel mechanical take-up device which, when tightened, will compress the resilient material or, by a stretch, fit. The rubber waterstop shall be designed and installed so that leakage between pipe and manhole is eliminated. Material and manufacture of waterstops shall conform to applicable provision of the ASTM Standard Specifications for Resilient Connectors between Reinforced Concrete Manhole Structure and Pipes, ASTM C923. Eight to eighteen inch (8”-18”) pipe penetrations are to have Z-lok boots and twenty to twenty four inch (20”-72”) pipe penetrations are to have A-lok boots or equal.

Cement for mortar used in the construction of manholes shall conform to the requirements of ASTM C-150, Type II. Sand shall conform with AASHTO Specification M-45. The mortar shall be composed of one (1) part cement and three (3) parts sand. The joints shall be constructed to produce a smooth, regular watertight surface. Only enough water shall be added to provide plasticity in placing the mortar.

The tensile strength of the gray cast iron for manhole frames, pavement-adjusting rings and covers shall be 30,000 PSI minimum conforming with the requirements of ASTM A-48. The requirement for transverse breaking load shall be 2,000 pounds, conforming with the requirements of ASTM A-438. Frames and covers shall conform to the Standard Details. Where lockable manhole covers are specified, the Contractor shall submit Shop Drawings of the locking device for approval of the Engineer.

Gray iron castings shall have appropriate certifications and be individually marked in accordance with the requirements of AASHTO M-306. Castings which do not possess appropriate AASHTO M-306 certifications and markings shall be replaced by the Contractor at no expense to the Owner.

Each precast concrete barrel section, precast concrete eccentric cone section, concrete adjusting ring and manhole cover/frame shall be set and sealed by use of a plastic gasket joint sealer, as manufactured by Henry Company, Inc., Ram-Nek Sealant Division, or an approved equal.

All manhole joints, grade rings, and frames are to be sealed with WrapidSeal external joint sealant, manufactured by CCI Pipeline Systems, or approved equal. Seals shall be applied per manufacturer's published recommendations.

All exterior manhole concrete surfaces shall be coated for waterproofing with TUFF-N-DRI® brush grade foundation coating, or approved equal, applied per manufacturer's recommendations.

Manholes shall be installed with no less than three (3) layers of 8-mil polyethylene encasement on the outside of the manhole.

Refer to Division 30, Section 30.01, Article 1.6 - Mix Requirements for Classes of Concrete, for specifications pertaining to Class A-3 concrete as required in forming manhole inverts. The use of Transite or Asbestos Cement (AC) pipe to form manhole inverts is prohibited.

Reinforcement steel shall conform to the requirements of ASTM A-185, ASTM A-615, Grade 60 steel, or better, and the Standard Details.

Article 3.3 Construction

A. General

Excavation and backfill for furnishing and installing sanitary sewer manholes shall be in accordance with Division 20, Section 20.13 - Trench Excavation and Backfill.

The manhole frames and covers shall be brought to the grades shown on the Drawings. Where the drawings do not specify a grade, they are to be set in accordance with the standard details. Manhole grade rings shall be set in and made secure by use of butyltight (or equal). (In paved streets, manhole grade rings and frames shall be placed on a full bed of mortar to prevent settlement.) Each manhole must have a minimum of one (1) six inch (6") grade ring and a two inch (2") pavement adjusting ring and will be externally sealed with CCI Pipeline Systems WrapidSeal or equal.

Use of, and installation of, a plastic gasket joint sealer ("Ram-Nek" or equal) for manhole construction shall be strictly in accordance with the manufacturer's printed instructions. Gaskets shall be trimmed on the inside of the manhole to prevent the excess gasket material from entering the sanitary sewer lines.

All portions of precast manholes must be approved by the Engineer prior to installation in the sanitary sewer systems. The precast manhole manufacturer shall provide timely notice (at least two working days in advance) to allow time for the

Engineer to arrange for necessary inspections. Installation, of manhole sections will not be allowed prior to the Engineers written approval. This approval does not relieve the Contractor of the responsibility for protection of manholes against damage during handling and installation.

Manholes shall be installed at the locations shown on the Drawings such that primary leads enter radially at the invert elevations specified. The base section shall be set plumb on a prepared surface.

Pipes are to be stabbed into the manhole through the boots such that at least two inches (2") but no more than three (3") of pipe extend past the inside face of the manhole.

Prior to backfilling, the Contractor shall apply TUFF-N-DRI® XTS waterproofing to the exterior of the manhole, WrapidSeal (or equal) at all manhole joints and three (3) layers of 8-mil polyethylene encasement on the outside of the manhole.NFS material is to be placed a minimum of three feet (3') outside of the manhole and compacted to a minimum of 95% of the modified proctor.

In the case of poured-in-place manhole construction, if the Contractor elects to accomplish the manhole construction utilizing more than one continuous concrete pour, a keyed construction joint shall be used. These manholes shall have poured-in-place bases.

B. Sanitary Sewer Manhole Invert Construction

The invert channels shall be smooth and semicircular in shape conforming to the inside of the connecting sanitary sewer section. Changes in directions of flow shall be made by forming a smooth radius sized to allow adequate access of a T.V. camera and/or maintenance equipment into the served sanitary sewer pipe. Changes in size and grades of the channels shall be made gradually and evenly. The invert channels may be formed directly in the concrete of the manhole base, or may be formed and poured in place, or may be constructed by laying a full section of sanitary sewer pipe through the manhole and breaking out the top half after the surrounding concrete has hardened. The floor of the manhole outside the channels shall be smooth and shall slope towards the channels at a grade of one inch (1"/ft) per foot. All dead-end sanitary sewer manholes shall have an invert installed through the entire Sanitary Sewer Manhole penetration for insertion of CCTV and/or maintenance equipment.

C. Additional Depth for Manholes

This item consists of the construction of additional depth to manholes over and above the standard depth of twelve feet (12'). Additional depth to manholes shall be constructed as per Standard Detail and designated as to type:

D. Component Part Replacements

The Contractor shall take due care not to destroy or damage existing component parts of manholes that are to remain or be reset in place.

The Contractor shall furnish and install barrel sections and grade rings to adjust the top of sanitary sewer manholes to grade in accordance with Sections 50.18 – Adjust Sanitary Sewer Manhole Cone to Finish Grade and 50.19 - Adjust Sanitary Sewer Manhole Ring to Finish Grade, as shown in Standard Details 50-24 and 50-25. All materials used in the adjustment of sanitary sewer manhole cones including mortar, steps barrel sections, block, etc., shall conform to the requirements for sanitary sewer manholes as outlined in Article 3.2 - Materials.

Installation of new sections shall be constructed to produce a smooth, regular, watertight surface.

E. Removal of Existing Manhole Component Parts

Upon removal of manhole component parts, the Contractor shall clean and prepare existing component parts prior to installation of replacement parts. This will include, but not be limited to, removing existing grout and Ramnek-type sealant from remaining and connecting component parts.

Materials that can be reused (manhole covers, frames, etc.) shall be salvaged and removed in a workmanlike manner and delivered to AWWU at 325 East 94th Court. The Contractor shall provide a disposal site for non-salvageable materials.

Article 3.4 Measurement

Manholes shall be measured as units complete in place. Depth of manholes will be based upon a measurement to the nearest foot, for payment purposes, from top of casting to the top of the base slab. All depths over the specified standard depth will be paid under "Additional Depth to Manholes."

Article 3.5 Basis of Payment

Payment for this Work shall be in accordance with Division 10, Section 10.07 - Measurement and Payment, and shall include full payment for all Work described in this Section.

Component parts of existing or new manholes shall be included in the unit price for the bid item being constructed, reset, or replaced, and shall be paid for by a cumulative total of each unit constructed.

Any excavation required in the removal or upgrade of sanitary sewer manholes shall be considered incidental to the bid item under construction.

Adjustments to grade in accordance with Sections 50.18 – Adjust Sanitary Sewer Manhole Cone to Finish Grade and 50.19 - Adjust Sanitary Sewer Manhole Ring to Finish Grade shall be incidental to the bid item under construction and no separate payment shall be made.

Related component parts to the bid items under construction (including steps, etc.) as shown in the Standard Details shall be incidental to that bid item.

If, in the opinion of the Engineer, the Contractor was negligent in damaging component parts of existing manholes to remain or be reset in place, the Contractor shall replace them in kind at his expense. If in the opinion of the Engineer, the damage was unavoidable, replacement component parts may be furnished by AWWU and the Work paid for at the bid item price.

Payment shall be made on the following basis:

ITEM	UNIT
Construct Sanitary Sewer Manhole (Type)	Each
Additional Depth to Manhole (Type)	Vertical Foot
R&R Manhole Frame and Cover	Each
R&R Manhole Frame and Cover and Rings	Each

SECTION 50.04 WATERTIGHT MANHOLE FRAMES AND COVER

Article 4.1 General

The Work under this Section consists of providing all operations pertaining to the furnishing and installation of watertight manhole frames and covers.

Article 4.2 Material

Watertight frames and covers for manholes and similar appurtenances shall be of cast iron and conform to the dimension shown in the applicable Standard Details. The requirement for tensile strength of the gray cast iron shall be 30,000 PSI minimum in accordance with the requirements of ASTM A-48 and the requirement for transverse breaking load shall be 2,000 pounds in accordance with the requirements of ASTM A-438. Contact surfaces between frames and covers shall be machined to provide a uniform contact surface. Manhole covers shall have identification letters as shown on the Standard Details.

Article 4.3 Construction

Installation shall be performed in accordance with the manufacturer's written instructions and the Standard Details.

Article 4.4 Measurement

Watertight manhole frames and covers shall be measured as complete units in place.

Article 4.5 Basis of Payment

Payment for this Work shall be in accordance with Division 10, Section 10.07 - Measurement and Payment, and shall include full payment for all Work described in this Section..

Payment is made only for the additional cost of furnishing and installing the watertight frame and cover which exceeds the cost of the standard frame and cover included in the completed manhole unit price.

Payment shall be made on the following basis:

ITEM	UNIT
Watertight Manhole Frame and Cover	Each

SECTION 50.05 CONNECTIONS TO EXISTING SANITARY SEWER MANHOLES

Article 5.1 General

The Work under this Section consists of providing all operations pertaining to the Work required for connections to existing manholes.

Article 5.2 Construction

Excavation and backfill for connections to existing manholes shall be in accordance with Division 20, Section 20.13 - Trench Excavation and Backfill.

Connections to existing manholes shall be made by core drilling the new penetration into the manhole and providing an NPC Kor-N-Seal or approved equal pipe to manhole connecter to produce a water tight seal. The use of impact tools to form new penetrations is prohibited.

Connection to existing manholes shall be made in a workmanlike manner, shall be water tight and have smooth flow surfaces and curves. The invert shall be brought into the existing manhole at the elevation shown on the Drawings. The downstream pipe in manholes shall be screened to prevent entry of mortar or other debris from entering the system.

Pipes are to be stabbed into the manhole through the boots such that at least two inches (2”) but no more than three (3”) of pipe extend past the inside face of the manhole.

Where a connection is made to an existing sanitary sewer manhole, the base shall be broken out if necessary to form a smooth channel in accordance with the construction requirements of a new manhole. Connections to existing sanitary sewer manholes will be allowed only after all portions of the Contractor's Work tributary to the connection point has been cleaned and flushed, inspected and tested. Under certain conditions, connections prior to the completion of the system may be permitted subject to the Engineer's prior written approval and the provision of suitable and adequate debris and sand traps and sumps upstream from the connection. If the connection to existing manhole occurs near the existing ladder rungs of the existing manhole, the Contractor shall remove the existing ladder rungs and install new ladder rungs so that the ladder rungs are not above a pipe penetration. (The Contractor may rotate the barrel sections and cone section of the manhole rather than removing old ladder rungs and installing new ladder rungs.)

Article 5.3 Measurement

Connection to existing manholes shall be measured as complete units in place.

Article 5.4 Basis of Payment

Payment for this Work shall be in accordance with Division 10, Section 10.07 - Measurement and Payment, and shall include full payment for all Work described in this Section. Where the connection is made to a pipe stubbed out of the existing manhole, payment will not be allowed for the connection.

Payment shall be made on the following unit:

ITEM	UNIT
Connect to Existing Sanitary Sewer Manhole	Each

SECTION 50.06 CONSTRUCT SANITARY SEWER DROP CONNECTION

Article 6.1 General

The Work under this Section consists of providing all operations pertaining to furnishing and installing drop sanitary sewer connections to manholes.

Article 6.2 Materials

Pipe and fittings are to meet the requirement of Section 50.02 Furnish and Install Pipe for the construction of sanitary sewer drop connections. Pipe penetrations into the manhole shall comply with Section 50.03, Article 3.2 – Material and Section 50.05, Article 5.2 – Construction. Pipe and fittings shall be restrained through the use mechanical joints and the use of EBAA Iron MEGALUG® fittings or equal.

Article 6.3 Construction

Excavation and Backfill for furnishing and installing drop sanitary sewer connections shall be in accordance with Division 20, Section 20.13 - Trench Excavation and Backfill. Installation of drop sanitary sewer connections shall be in accordance with the Standard Details.

Over-excavation under drop connection shall require compaction of not less than ninety-five percent (95%) of the maximum density prior to installation of the pipe and fittings, or the concrete cradle. The lower invert of the exterior drop connect must be bedded and cured in concrete.

Refer to Division 30, Section 30.01 - General for requirements pertaining to Class A-3 concrete.

Article 6.4 Measurement

Drop sanitary sewer connections shall be measured as units, complete in place.

Article 6.5 Basis of Payment

Payment for this Work shall be in accordance with Division 10, Section 10.07 - Measurement and Payment, and shall include full payment for all Work described in this Section.

Payment shall be made on the following basis:

ITEM	UNIT
Construct Sanitary Sewer Drop Connection	Each

SECTION 50.07 CONSTRUCT BEAVER SLIDE

Article 7.1 General

The Work under this Section consists of providing all operations pertaining to the construction and installation of beaver slides in a manhole.

Article 7.2 Material

Refer to Division 30, Section 30.01 - General, for requirements pertaining to Class A-3 concrete as required in forming beaver slide inverts.

Article 7.3 Construction

Beaver slides shall be constructed to provide a smooth and continuous channel directed into and with the flow of the receiving sanitary sewer and in accordance with the Standard Details.

Beaver slides are required where the invert of the connecting sanitary sewer is above the crown of the receiving sewer and the drop in the manhole does not exceed the maximum height shown on the Standard Details.

Article 7.4 Measurement

Beaver slides shall be measured as units complete in place.

Article 7.5 Basis of Payment

Payment for this Work shall be in accordance with Division 10, Section 10.07 - Measurement and Payment, and shall include full payment for all Work described in this Section.

Payment shall be made on the following basis:

ITEM	UNIT
Construct Beaver Slide	Each

SECTION 50.08 LATERAL CONNECTION TO EXISTING PIPE

Article 8.1 General

The Work under this Section consists of providing all operations pertaining to lateral connections to trunk and interceptor mains, as approved by the Utility.

Article 8.2 Construction

Lateral connections to existing sanitary sewer pipe shall be water tight and have smooth flow surfaces. The lateral shall be brought into the existing pipe in accordance with the Contract Documents, unless otherwise approved by the Engineer. The connection shall be made in a top quadrant of the pipe, and the lateral shall not intrude past the inside wall of the existing pipe.

Taps to reinforced concrete sanitary sewer pipe shall be made by use of an approved mechanical hole cutter. A tapping saddle shall be installed centered over the hole. Breaking into the pipes by use of a chipping gun, jackhammer, or other similar method will not be allowed.

Article 8.3 Measurement

Lateral connections will be paid for as a complete unit in place which includes all pipe and fittings from the manhole to the existing main.

Article 8.4 Basis of Payment

Payment for this Work shall be in accordance with Division 10, Section 10.07 - Measurement and Payment, and shall include full payment for all Work described in this Section.

Payment shall be made on the following basis:

ITEM	UNIT
Lateral Connection	Each

SECTION 50.09 DEEP SANITARY SEWER SERVICE RISERS

Article 9.1 General

The Work under this Section consists of providing all materials and operations pertaining to deep sanitary sewer service risers. Deep service risers shall be installed where the sanitary sewer is in excess of twelve feet (12') deep and eight feet (8') of cover can be maintained over the service. Deep service risers shall be fully restrained pipe to the edge of right-of-way or easement. No more than two sanitary sewer service connections shall be installed on a single deep service riser.

Article 9.2 Material

All deep sanitary sewer service riser connections shall be constructed with the following materials:

A. Ductile iron pipe with Tyton® joints and Mechanical Joint fittings.

B. EBAA Iron MEGALUG®, U.S. Pipe Field LOK® Gasket, or approved equal.

C. PVC Pipe fully restrained.

D. Romac SST tapping saddle or equal

Article 9.3 Construction

Excavation and backfill for furnishing and installing deep sanitary sewer service risers shall be in accordance with Division 20, Section 20.13 - Trench Excavation and Backfill. Contractor shall construct deep sanitary sewer service risers in accordance with the Standard Detail.

Article 9.4 Measurement

Service risers for deep sanitary sewer connections shall be measured as complete units in place with either one or two connections.

Article 9.5 Basis of Payment

Payment for this Work shall be in accordance with Division 10, Section 10.07 - Measurement and Payment, and shall include full payment for all Work described in this Section.

Payment shall be made on the following basis:

ITEM	UNIT
Deep Sanitary Sewer Service Riser (Size)	Each

SECTION 50.10 SANITARY SEWER SERVICE CONNECTIONS

Article 10.1 General

The Work under this Section consists of providing all materials and operations pertaining to the construction required for sanitary sewer service connections.

The Contractor shall notify the Engineer and property owners seventy-two (72) hours prior to any interruption of sanitary sewer service. The Contractor shall provide temporary service during the period of interruption.

If construction activities are to occur in areas other than existing easements and temporary construction permit areas, the Contractor shall secure a written Access Permit from the property owner prior to beginning construction. Such permission shall hold the Municipality of Anchorage harmless from any damage and claims sustained by the Contractor's operations.

Article 10.2 Material

All gravity sanitary sewer service connects shall be constructed with class 50 ductile iron Tyton® joint pipe, DR 18 PVC pipe or equal, or other pipe material approved by AWWU in the Design and Construction Practices Manual. The minimum diameter of gravity sewer services is four inches and two inches for pressure sewer services.

Where insulation is required it is to be in conformance with Section 50.01, Article 1.5 - Insulation.

For gravity sewer services, connection to main shall be made with a Romac style CB epoxy[JRA1] coated sewer saddle.

All two inch (2") pressure sanitary sewers shall be constructed with polyethylene coated Type K copper tubing or HDPE SDR 11 per the Standard Detail for this Work. All two inch (2") pressure sanitary sewer connections shall use a service clamp per the Standard Detail.

All two inch (2") force main sanitary sewers to be installed with minimum of ten feet (10') of bury.

Article 10.3 Construction

The minimum standard depth of bury for gravity sewer is eight feet (8'). Where this cannot be achieved, the sewer pipe is to be laid at the minimum slope to achieve the greatest depth of bury possible. Where the depth of bury is reduced to five and one-half feet (5 ½'), but greater than four and one-half feet (4 ½') the sewer pipe is to be fully enclosed with a minimum of three inches of rigid foam. Installation of sewer pipe with less than four and one-half feet (4 ½') of cover will not be accepted.

Pressure sewer is to have a minimum cover of ten feet (10') with no reduction allowance for insulation.

Excavation and backfill for furnishing and installing sanitary sewer service connections shall be in accordance with Division 20, Section 20.13 - Trench Excavation and Backfill.

The service connections shall be bedded with Class 'E' bedding. For gravity and force main sewers bedding shall be placed the full extent of ditch, six inches (6") above and below the pipe.

Construction shall be in accordance with the Standard Details. Multiple connections shall not be made any closer together than three feet (3'). The terminus of the house connection shall be sealed with a suitable stopper. Taps, where allowed for installation of saddles on to sanitary sewer pipes, shall be made with a mechanical hole cutter or equal. Tee and wye saddles will be allowed on mains twelve inches (12") and larger, wye saddles will be the only saddles allowed on mains smaller than twelve inches (12"). All gravity service connections to sanitary sewer mains shall be approved ductile iron pipe or equal material approved by AWWU.

Saddles for gravity sewer connections shall be placed over a circular hole sawed one-eighth inch (1/8") larger than the inside diameter of the saddle. The strap(s) shall be tightened in accordance with the manufacturer's instructions and centered over the hole sawed in the pipe being tapped. The hole shall be made above the spring line of the main being tapped.

All ductile iron pipe shall be encased in one layer of polyethylene encasement in accordance with Section 50.13 - Polyethylene Encasement. Sanitary sewer service connections shall be installed to the edge of right-of-way or edge of sanitary sewer easement of the lot being served and shall be permanently marked by means of a Carsonite (or equal) marker extending three feet (3') above grade, painted green.

Record drawings shall include the pipe station of service connection at the main, service length, service invert elevations at the main and property line and distance to nearest property corner.

Minimum slopes for gravity sewer service connections shall be as follows:

Pipe Diameter	Slope	
4"	2.08%	.0208 feet per foot
6"	1.00%	.0100 feet per foot
8"	0.40%	.0040 feet per foot
10"	0.28%	.0028 feet per foot
12"	0.22%	.0022 feet per foot

Upon exposing a stub-out, the Contractor is required to ensure that the line has proper slope, bearing, and is free and clear of obstructions prior to connection with the service extension.

If the service line is found to be either plugged or if a gravity sewer service is found to have reverse grade, the Contractor is required to notify the AWWU immediately or be liable for correcting the misalignment or unplugging the line at his expense. At the point of tie-in if No-hub pipe is exposed, a "Romac repair clamp" SC or equal shall be used to connect to the on-property service line. If a "Ty-seal" hub is utilized, the use of a "Romac repair clamp" or equal is not required. When using a bend at the point of tie-in, two (2) "Romac repair clamps" shall be used.

An AWWU representative is to perform the field inspection at the initial connection or service line extension from the AWWU sewer main without exception.

AWWU will not approve any installation which is not in accordance with the Uniform Plumbing Code, these Specifications, and the AWWU Design Criteria. The Contractor shall not start the excavation for main line tap or on site service until a permit is obtained. All permits must be posted on the job at the time of the inspection.

Article 10.4 Measurement

Sanitary sewer service connections shall be measured as completed units in place. This item will include all materials, excavation, installation, compaction, backfill, and installation of bedding material.

Unless specifically identified for payment under a separate bid item, the unit price bid for Sanitary Sewer Service Connect (size) shall include all labor, equipment and materials to furnish and install a functional sanitary sewer service connection including but not limited to the following incidental items: location and verification of customers' existing service locations, disconnection and reconnection of customer's existing services where the Work includes replacement of existing services, clearing and grubbing; trench excavation and backfill; excavation dewatering; trench support system; furnishing and installing Type II-A Classified Fill and Backfill; bedding; compaction; installation of pipe, fittings, adapters, or other necessary appurtenances; sanitary sewer service insulation; polyethylene encasement; when applicable, connection to existing service at edge of right-of-way; disposal of unusable or surplus material; protection of existing utilities; restoration of existing drainage patterns; removal and replacement of existing culverts, fences, landscaping, and other public or private improvements; finish grading; and cleanup.

Where the Work includes disconnecting existing sanitary sewer services from an existing sewer main and reconnecting them to a new sewer main, the disconnection and reconnection of those existing sewer services will be considered incidental to the installation of the new sewer main.

Article 10.5 Basis of Payment

Payment for this Work shall be in accordance with Division 10, Section 10.07 - Measurement and Payment, and shall include full payment for all Work described in this Section.

Payment shall be made on the following basis:

ITEM	UNIT
Sanitary Sewer Service Connect (Size)	Each

SECTION 50.11 REMOVE AND DISPOSE OF EXISTING CESSPOOLS OR SEPTIC TANKS AND CONNECT EXISTING SERVICE

Article 11.1 General

The Work under this Section consists of providing all operations pertaining to removal and disposing of existing cesspools or septic tanks and connection of existing service. If cesspools or septic tanks are encountered during construction, the Contractor shall either defer construction of the sewer main through the cesspools until such time as all downstream construction has been completed, tested and accepted or the Contractor may proceed with construction provided that the waste from the house service connection is accommodated continuously until satisfactory connection to the sanitary sewer main can be made. Such accommodations shall be in a manner approved by the Municipality of Anchorage Department of Health and Human Services.

Article 11.2 Construction

Where the Contractor must remove cesspools or septic tanks from the trench area, the following procedures shall apply:

1. The liquid and sludge from the existing structure shall be pumped into a watertight container, and transported to and disposed of at an approved sanitary sewer dump station to be designated by the Engineer. Care shall be exercised in transporting cesspool liquid and sludge so that no spillage occurs during transport and disposal.

2. The Contractor shall then remove the remaining sludge, septic tank, cesspool or privy pit, logs or cribbing, and any saturated gravel remaining in the trench area, and shall dispose of this material at a Contractor provided disposal area approved by the Municipality of Anchorage Department of Health and Human Services and the Engineer.

3. The Contractor shall then fill the void created by removal of the cesspool with Type III material in accordance with Division 20, Section 20.13 - Trench Excavation and Backfill.

4. As soon as the downstream portion of the new sanitary sewer has been tested and accepted the Contractor shall replace the existing service to the property line and connect the existing house service to the main. Connection shall be made in a workmanlike manner and at a uniform grade to accommodate the existing service.

5. The contractor shall schedule inspection of the abandoned systems with AWWU Field Service office. The abandoned disposal system must be shown on the record drawings.

Article 11.3 Measurement

Removal of existing cesspool or septic tank, replacing the existing service to the property line and connecting existing house service to the new sanitary sewer is to be measured as two pay items as indicated in Article 11.4 – Basis of Payment. Disposal of logs, cribbing, tanks and saturated gravel shall be measured as unsuitable material. Gravel necessary to fill the void after removal of structure shall be measured as Type III per Division 20, Section 20.21 – Classified Fill and Backfill.

Article 11.4 Basis of Payment

Payment for this Work shall be in accordance with Division 10, Section 10.07, - Measurement and Payment, and shall include full payment for all Work described in this Section.

Payment shall be made on the following basis:

ITEM	UNIT
Remove Cesspool or Septic Tank	Each
Connect Existing Service	Each

SECTION 50.12 CONSTRUCT SANITARY SEWER CLEANOUT

Article 12.1 General

The Work under this Section consists of providing all materials and operations pertaining to construction and installation of sanitary sewer cleanouts.

Article 12.2 Material

Material used in the construction of sanitary sewer cleanouts shall conform to the requirements of AWWA C-151, for Class 50 ductile iron pipe, or equal material approved by AWWU, and AWWA C104/ANSI A21.4 fittings and as shown on the Standard Detail. Fittings to be restrained joint pipe and shall be EBAA Iron MEGALUG®, Romac Industries RomaGrip, U.S. Pipe Field LOK® Gasket, or approved equal.

Article 12.3 Construction

Excavation and backfill for the construction of sanitary sewer cleanouts shall be in accordance with Division 20, Section 20.13 - Trench Excavation and Backfill.

Over-excavation under cleanouts shall require thorough compaction prior to installation of the pipe and fittings.

The cleanout assembly shall be restrained throughout by use of EBAA Iron MEGALUG®, Romac Industries RomaGrip, U.S. Pipe Field LOK® Gasket, or approved equal, and shall be installed in accordance with Standard Detail 50-19.

Article 12.4 Measurement

Cleanouts will be measured as units, complete in place.

Article 12.5 Basis of Payment

Payment for this Work shall be in accordance with Division 10, Section 10.07 - Measurement and Payment, and shall include full payment for all Work described in this Section.

Payment shall be made on the following basis:

ITEM	UNIT
Construct Sanitary Sewer Cleanout	Each

SECTION 50.13 POLYETHYLENE ENCASEMENT

Article 13.1 General

The Work under this Section consists of providing all labor, materials, and equipment to furnish and install one layer of polyethylene encasement on all ductile iron pipe, metallic fittings and cleanout risers. The polyethylene encasement shall be a linear low-density polyethylene film with a minimum of thickness of 8 mil.

Polyethylene encasement shall be furnished on all ductile iron water mains, sanitary sewer mains, sanitary sewer laterals, sanitary sewer connections, water services, valve boxes, and sanitary sewer cleanouts.

Article 13.2 Material

The polyethylene encasement material for pipe shall conform to the most current edition of AWWA C105/ANSI A21.5.

Article 13.3 Construction

The polyethylene encasement shall be installed in strict conformance to the methods described in the most current editions of AWWA C105/ANSI A21.5 and the Ductile Iron Pipe Research Association's "A Guide for the Installation of Ductile Iron Pipe." The Contractor shall used Method A of ANSI/AWWA C105/A21.5 to install polyethylene encasement.

Bedding and backfill material around pipelines with polyethylene encasement shall be placed using protective measures such as shields, guards, coating systems, and/or other methods as needed to protect the polyethylene encasement from becoming torn, punctured or otherwise damaged during the Work. Damage to the integrity of the polyethylene encasement shall be either repaired or the pipeline removed and the polyethylene encasement replaced as directed by the Engineer. Costs for repair and/or replacement of damaged polyethylene encasement shall be considered incidental to the installation of the polyethylene encasement and/or the installation of the pipeline protected by the encasement.

Article 13.4 Measurement

Polyethylene encasement shall not be measured for payment.

Article 13.5 Basis of Payment

No separate payment shall be made for polyethylene encasement. This Work is considered incidental to the bid item under construction.

SECTION 50.14 BYPASS PUMPING SANITARY SEWAGE FLOWS

Article 14.1 General

The Work under this Section consists of providing all labor, equipment, materials, planning, coordination, operations, permits, and facilities to control sewer flow for inspection, maintenance, repair or replacement of sewer assets.

Definitions:

Sewer – domestic or nondomestic wastewater which may contain surface and ground water.

Service – connection and/or extension of pipe from the collection system to private property and typically to one structure

Collection system – series of pipes and structures to collect and convey sewer to a treatment facility

Bypass – a diversionary flow path for sewer that will utilize pipes, pumps, tanks and other equipment to maintain an area suitable for maintenance, repair, rehabilitation, installation and/or CCTV inspection.

Property Owner – The authorized agent that can legally obligate debt and risk to real property from which sewer is being collected

Resident –person(s) occupying a property from which sewer is being collected who may or may not be the Property Owner.

The Contractor is to provide notice to affected parties who may be impacted by planned sewer flow control. Interruptions are not to exceed six hours.

Sewer flow control is to be completed such that it will not damage public or private property. All damaged property is the sole responsibility of the Contractor to fix, repair clean and make whole.

Article 14.2 Materials

Where flows are bypassed, discharge bypass flows to the sanitary sewer collection system.

Bypass systems are to have sufficient equipment and materials on site to ensure immediate repair or modification of any part of the system.

A. Conduit and pipes

Provide water tight hoses, piping and fittings of sufficient capacity and pressure rating to accomplish the sewer bypass. The Contractor is to have replacement conduit and fittings on-site to make multiple repairs to the conduit.

Where hoses are provided, the Contractor is to have on hand two sections of replacement hose that are capable of covering the longest single hose in the flow control system.

The conduit, pipe, repair and transition materials are to be of a common size and material that purveyors of such materials will have a ready supply as a backup to the on-site replacement conduit.

B. Pumping and suction equipment

Pumps are to be adequately sized, well maintained and of an appropriate type for sewer. They are to be fully automatic self-priming units that do not require the use of foot-valves or vacuum pumps in the priming system and are to allow dry run for long periods of time to accommodate the cyclical nature of sewer flow.

Pumps with engines or associated combustion power generation units must be in compliance with the MOA noise ordinance. The Contractor is to apply for and receive a noise permit when required by the MOA noise ordinance.

All bypass pumps used to bypass mainlines and services six inches (6”) and larger are to have a reliable standby pump of equal capacity to the primary bypass pump. These backup pumps shall be on-line and isolated from the primary system through the use of valves.

Services four inches (4”) in size being bypassed are to have at a minimum one interchangeable backup pump per each lot of five operationally identical pumps on-site and ready for incorporation.

C. Plugs

All sewer line plugs are to be permanently marked with a Contractor identification marker. Secure plugs with a tag line. The tag line is to extend and be secured to a point outside of the manhole or wet well in which it is being used. Airlines are not considered tag lines.

Temporary plugs must be removed and the flow restored after planned interruptions. If the sewer flow control work has not been completed prior to the end of the planned interruption, the Contractor is then required to restore sewer flow by providing, operating and maintaining a sewer bypass until sewer flow is restored to normal.

D. Portable Toilets

Portable toilets are to be provided for buildings with temporarily blocked services. One portable toilet is to be provided per each two residential units or eight employees. Each business complex with a plugged sewer service is to be supplied at least one handicap accessible portable toilet with a wash station. Businesses with more than twenty four (24) employees are not eligible for portable toilet service and must have the sewer service bypass the work. Residential units housing disabled sewer customers must agree in advance to portable toilets or must have their sewer services bypass the work.

E. Holding Tanks

Tanks are to be metal or plastic, free of leaks, designed to contain fluids and closed to the atmosphere except to allow for venting. Vents are to be smaller than the feed lines and installed at the highest point of the system. The tank size is to

be no less than double the anticipated daily flow. Filling and discharging of tanks is to take place through securable ports.

Article 14.3 Construction

A. General

Unless the anticipated flow is provided in the special provisions, the Contractor is to assume that the sewer flow is to be equivalent to the capacity of the sewer system being bypassed.

The Contractor, at a minimum, is to provide periodic monitoring and observations of any active sewer flow control. The maximum period between observations is limited to two hours and is to be recorded in a log book that is available to the Engineer.

In addition to having the bypass system monitored, the Contractor is to provide to the Engineer and on all notices for temporary service the name and 24-hour contact number for the person(s) responsible for continuous operation of the bypass system. This person is to be known as the Sewer Flow Control Supervisor. After approval of the sewer flow control plan, any substitutions of the Sewer Flow Control Supervisor is to be approved by the Engineer and new notices are to be sent out to sewer customers previously notified.

The Contractor is to provide a sewer flow control plan showing all components of the sewer flow control equipment, materials, location personnel and schedule.

B. Flow Control Plan Submittal

The Contractor is to prepare, submit and receive approval of a detailed Flow Control Plan that describes the measures to be used to control flows prior to implementation of such plans.

The plan, at a minimum, is to contain the following items:

1. Plug types and sizes
2. Pump types, sizes, and power source
3. Conduit types, sizes, connections, valves and fittings
4. Name and telephone number of the Sewer Flow Control Supervisor, who is responsible for Flow Control.
5. Key personnel being used for 24 hour operations
6. Copy of noise permit application and approved permit when it is received
7. Diagram(s) indicating pump, pipes, catch points, portable restrooms and discharge point showing applicable elevations
8. Identification of structures with basements
9. Diagram and state location of provisions being made for vehicular and pedestrian traffic. Provide details of ramps, trenches, temporary surfaces etc…
10. Calculations used to size system
11. Copy of property access agreement between the Contractor and the Property Owner (may be a delayed submittal, but must be obtained and provided prior to flow control implementation)

C. Conduits

Conduits are to be constructed leak and repair band free. Repair bands may be used after the flow control system has been accepted for operation. Reinsertion of the conduit into the sewer collection system is to be done such that the system is not damaged. New penetrations for bypass conduits into the sewer collection system is not allowed, except where the connection is to made into assets being removed by the project.

Sewage will not be allowed to free flow in gutters, streets, streams or over sidewalks, etc., nor is any sewage allowed to flow into storm inlets or conduits.

Where conduits pass over traveled ways, the conduit is to be protected from vehicular and pedestrian traffic and vice versa.

D. Notifications

Notification is to be given to the sewer utility, Property Owner(s), business manager(s), and Resident(s) whose sewer service is being plugged, bypassed, or affected by the planned sewer flow control. Notices are to be provided a minimum of a minimum of seventy two (72) hours to a maximum of one hundred forty-four (144) hours prior to commencement of the flow control. Notices at a minimum will require a written statement of when utility interruption will begin and end, form and/or amount of compensation for impacts, twenty four hour (24hr) emergency contacts, indemnification of the MOA and AWWU, signatures of both the Contractor and Property Owner.

Where signatures cannot be obtained from the Property Owner after a minimum of three days of well documented attempts during the hours of 7am-8am, 12pm-1pm, and 6pm-7pm each day, the Contractor may complete the flow control Work within permitted Rights-of-Ways and easements. Work on private property may not commence without permission from the Property Owner.

E. Plugs

When plugs are inserted to control the flow, the Contractor is to monitor upstream components of the services and sewer collection system.

After the Work has been completed and restricting the flow is no longer needed for the work, then the flow shall be restored to normal. Flow shall be restored by removing the plugs in an order that permits flow to slowly return to normal without surcharging or causing other major disturbances downstream.

F. Service Disconnection

Services are to be disconnected preferably at the property line or intercepted with a vacuum at the exterior structure cleanout for all rehabilitation work. All work on property requires the Contractor to obtain written permission from the Property Owner. Disconnected and intercepted sewer service flows are to be captured, collected and transferred to the sewer collection system downstream of the work. The Contractor is to restore all disconnected services unless it is in the Contract to abandon the sewer service.

Alternatively the Contractor may request permission from Businesses, Property Owner(s) and Primary Resident(s) of single family and duplex structures for permission to block the service during the work or find alternative accommodations for residences.

Article 14.4 Measurement

Sewer flow control is to be measured on a lump sum basis regardless of the method used by the Contractor.

All work including but not limited to disconnection, interception, plugging, bypassing, pumping around, public coordination, permitting, and repairing damage caused by sewer flow control is included in the lump sum price.

Article 14.5 Basis of Payment

Payment for this Work shall be in accordance with Division 10, Section 10.07 - Measurement and Payment.

Payment shall be made under the following units:

ITEM	UNIT
Sewer Main (8” dia - 16” dia) Flow Control	Lump Sum
Sewer Main (16”+ dia) Flow Control	Lump Sum
Sewer Service (4” dia) Flow Control	Lump Sum
Sewer Service (4”+ dia) Flow Control	Lump Sum

SECTION 50.15 ON-PROPERTY SANITARY SEWER SERVICE

Article 15.1 Description

The Work under this Section consists of furnishing all material, labor, and equipment necessary for connecting the new sanitary sewer service at property line to the existing sanitary sewer service on property at, or near, the existing sanitary sewer main located on private property.

The exact location, type, and size of existing service connections are unknown. All information provided in the Drawings and Specifications has been taken from maintenance records, record drawings, or field surveys, and represents AWWU's best indication of the service's location and size. AWWU shall not be liable for accuracy of information on these drawings. The Contractor shall locate the existing service line prior to installing the new service on property.

The Contractor shall notify the homeowner forty-eight (48) hours in advance of actual construction of the Work.

Article 15.2 Material

All material shall be in accordance with Section 50.02 - Furnish and Install Pipe. The Contractor shall supply all necessary fittings, adapters and other appurtenances to make a complete working system.

Article 15.3 Construction

The Contractor shall perform required trench excavation and backfill and compact to specified density; provide Class E Bedding as outlined in MASS. Bedding must be laid the full width of the ditch and compacted to a minimum of ninety-five percent (95%) of the maximum density, flush and test system; protect/restore existing utilities, driveways, trees, utility markers, survey monuments, fences, retaining walls, buildings, walkways, gardens, landscaping and other private improvements damaged by the Contractor; and provide general cleanup. Prior to beginning Work, the Contractor shall submit to the Engineer in writing for approval, the service line routing, method of construction and schedule for performing the Work. The Contractor shall use appropriately sized construction equipment to minimize the impact to on-lot improvements and vegetation.

All Work shall be done in accordance with Division 20, Section 20.13 - Trench Excavation and Backfill, and this Division.

Article 15.4 Measurement

Locating, furnishing and installing on-property sanitary sewer service lines shall be measured as units, complete in place.

The unit price for furnishing and placing sanitary sewer service connections on private property shall constitute full compensation for all labor, material and equipment required to provide a complete functioning sanitary sewer service connection from the property line to

an acceptable connection point on the existing sanitary sewer service, as determined by the Engineer, and installation of appurtenances.

All excavation, pipe bedding material, pipe fittings, and appurtenances, insulation, backfill, backfill gravel, topsoil and seeding, resetting fences, reconstructing retaining walls, walkways and restoration of property shall be included in this bid item. Asphalt or concrete driveways (where required) shall be paid for under the appropriate bid items for this Work.

Any conflicts with the homeowner concerning the installation of the on-lot sanitary sewer service connection and restoration of the property after construction shall be resolved by the Contractor at no additional cost to the Owner.

Article 15.5 Basis of Payment

Payment for this Work shall be in accordance with Division 10, Section 10.07 - Measurement and Payment, and shall include full payment for all Work described in this Section.

Payment shall be made on the following basis:

ITEM	UNIT
Furnish and Install (Size) On-Property Sanitary Sewer Service	Each

SECTION 50.16 MANHOLE REHABILITATION

Article 16.1 Description

The Work under this Section consists of rehabilitation of existing manholes or adjusting their grade. The Contractor is to provide all labor, materials, and supervision required to furnish and install new manhole components needed to rehabilitate existing manholes.

Rehabilitation of existing manholes can include the following items of Work:

Removal and replacement of manhole covers and frames.

Removal and replacement of grade rings.

Removal and replacement of manhole ladder rungs.

Removal and replacement of cone section.

Removal and replacement of barrel ring/riser section.

Removal and replacement of base section.

Removal and replacement of entire manhole assembly.

The manhole components to be removed and replaced for a specific manhole are identified in the Drawings. The Contractor is to reuse those manhole components that are not to be replaced in assembly of the rehabilitated manhole.

Article 16.2 Material

The replacement component materials of construction to be deployed in the Work are to comply with the requirements of this Division and the Standard Details. The Contractor shall furnish new, unused materials for those manhole components identified in the Drawings to be replaced.

Article 16.3 Construction

A. Work Plan

The Contractor shall prepare and submit a Work Plan to the Engineer that identifies how the manhole rehabilitation effort will proceed without interruption of existing sanitary sewer service. The Plan shall also address maintenance of vehicular traffic and pedestrian traffic. Manhole rehabilitation efforts shall not proceed without the Engineer's approval.

B. Temporary Services

The Contractor shall maintain sanitary sewer service during the execution of the Work. Any sewage pumping, temporary bypass piping, and/or temporary sanitary sewer service required to complete the Work will be considered incidental to the manhole rehabilitation effort and will not be paid for separately.

C. Earthwork

The Contractor shall excavate around the manhole as needed to access the Work. All excavation, shoring, dewatering, backfill and compaction efforts required to access the Work shall be per Division 20 – Earthwork. All importation of fill and/or disposal of unsuitable material, excavation, and backfill efforts shall be considered incidental to the manhole rehabilitation effort and will not be paid for separately.

D. Restoration

Upon completion of the manhole assembly effort, the Contractor shall restore the existing grades and surrounding area to preconstruction conditions. Any pavement, sidewalk, curb and gutter, landscaping, and/or other improvements or natural features disturbed and/or damaged by the manhole rehabilitation effort shall be restored by the Contractor to preconstruction conditions. Restoration of these conditions shall be considered incidental to the manhole rehabilitation effort and will not be paid for separately.

E. Manhole Rehabilitation

The Contractor shall remove and replace those manhole components identified in the Drawings. The rehabilitated manhole shall be configured according to the requirements of this Division and the Standard Details.

The Contractor shall use care in protecting those component parts of the existing manhole that are to be reused in the rehabilitated manhole.

Where the Work requires disassembly and reuse of components that are assembled with grout and/or mastic/sealant/gasket materials, the Contractor shall completely remove these materials from the components and replace them with new materials approved by AWWU for manhole construction in the reassembly of the rehabilitated manhole.

Where the Work requires the removal and replacement of existing ladder rungs, all ladder rungs within the existing manhole shall be removed and replaced. The Contractor shall cut off existing rungs and grind smooth against the interior wall of manhole. New ladder rungs shall be installed per the Standard Details.

Where the Work requires the removal and replacement of manhole cone section, manhole barrel ring/riser sections, and/or removal and replacement of manhole base section, the completed rehabilitated manhole shall be tested for leakage prior

to backfilling. With the excavation still dewatered, the Contractor shall demonstrate the integrity of the completed rehabilitated manhole using the methods described in Section 50.02, Article 2.4 - Testing. The infrastructure to be tested shall include all components of the rehabilitated manhole and connecting pipes disturbed or otherwise altered in the execution of the Work. If the rehabilitated manhole does not pass the leakage test due to visible defects in the new components and/or materials furnished by the Contractor, the defects shall be corrected and the assembly retested as often as required to pass the leakage test. If the failure of the test is determined by the Engineer to be a result of defects in the manhole components reused in the Work, the Engineer may direct the Contractor to take additional corrective measures on a time and materials basis.

The Contractor shall dispose of manhole components not used in the manhole rehabilitation effort and all other unsuitable or waste materials created in the execution of the Work. Disposal of these components shall be considered incidental to the manhole rehabilitation effort.

Article 16.4 Measurement

Rehabilitated manholes shall be measured as units complete in place with the components identified in the Drawings replaced, tested and accepted by the Engineer.

All effort required to complete the Work, including development of a Work Plan acceptable to the Engineer, temporary bypass piping, temporary sanitary sewer service, excavation, shoring, dewatering, backfilling, integrity testing, restoration of Work area to existing preconstruction conditions, and/or other items of Work needed to complete the manhole rehabilitation effort shall be considered incidental to the completion of the Work and shall not be paid separately.

Article 16.5 Basis of Payment

Payment for this Work shall be in accordance with Division 10, Section 10.07 - Measurement and Payment, and shall include full payment for all Work described in this Section.

Payment shall be made on the following basis:

ITEM	UNIT
Remove and Replace Manhole Cover and Frame (Manhole #)	Each
Remove and Replace Manhole Grade Rings (Manhole #, Number & Height of Grade Rings)	Each
Remove and Replace Manhole Ladder Rungs (Identify Manhole No., Number of Ladder Rungs)	Each
Remove and Replace Manhole Cone Section (Manhole #, Type)	Each
Remove and Replace Manhole Barrel Ring/Riser Section (Manhole #, Type, Number of Rings Replaced, Depth Below Grade measured to bottom of lowest ring to be replaced)	Each
Remove and Replace Manhole Base Section (Manhole #, Type, Depth of Base Section Below Grade measured to the bottom of base section)	Each

SECTION 50.17 RAISE OR LOWER SEWER SERVICE

Article 17.1 General

The Work under this Section consists of all operations pertaining to raising or lowering of existing sanitary sewer services when the grade(s) of such services interfere with a utility under construction. Every effort has been made in the preparation of the Drawings to avoid conflict in grades with existing sewers; however, there may be some locations where conflict occurs.

Article 17.2 Construction

Where a conflict in grade occurs, the Contractor shall be required to excavate the sewer service from the point of interception sufficient distance to raise or lower the sewer service such that the grade conflict will be eliminated. Minimum grade of the sewer service shall be maintained in accordance with Section 50.10, Article 10.3 - Construction. In no case will the length of raising or lowering of the sanitary sewer service exceed fifty feet (50'). All excavation, backfill, and pipe laying shall be performed in accordance with the provisions of this Division and Division 20 - Earthwork.

Article 17.3 Measurement

Raising or lowering sewer services will be measured as units, complete in place.

Article 17.4 Basis of Payment

Payment for this Work shall be in accordance with Division 10, Section 10.07 - Measurement and Payment, and shall include full payment for all Work described in this Section unless otherwise noted.

Any materials needed to complete the raising or lowering of a sewer service shall be provided by the Contractor and considered incidental to the price bid for this item. Compaction, where required, will also be considered incidental to the Contract.

Payment shall be made under the following unit:

ITEM	UNIT
Raise or Lower Sewer Service	Each

SECTION 50.18 ADJUST SANITARY SEWER MANHOLE CONE TO FINISH GRADE

Article 18.1 General

The Work under this Section consists of providing all operations pertaining to the adjustment of existing manhole cones to finish grade. All broken and/or missing manhole components are to be replaced with new materials furnished and installed by the Contractor in accordance with these Specifications.

Article 18.2 Material

All materials used in the adjustment of manhole cones including mortar, steps, barrel sections, premolded plastic gaskets, etc., shall conform to the requirements for manholes as outlined in Section 50.03 - Sanitary Sewer Manholes. Radial concrete manhole blocks may be used for upward adjustments in certain cases if approved by the Engineer.

Article 18.3 Construction

The Contractor shall remove the existing cone and add to or remove portions of the barrel of each manhole requiring a cone adjustment. Each precast concrete barrel and cone section shall be set upon and sealed with a premolded plastic gasket which shall meet AASHTO M-198, ASTM C990, or Federal Specification SS-SS-210. Any damage to manholes resulting from construction under this Contract shall be repaired or the damaged portion replaced at the Contractor's expense. All inverts, benchwalls, and/or catch areas shall be left clean and free from any foreign materials.

Contractor shall adjust the manhole cone to finish grade prior to placement of pavement. Cutting of new asphalt for adjustments is not acceptable. Any adjustment(s) requiring cutting of new asphalt shall not be paid and shall be deducted from the plan quantity.

Article 18.4 Measurement

Manhole cone adjustments shall be measured as units, complete in place.

Article 18.5 Basis of Payment

Payment for this Work shall be in accordance with Division 10, Section 10.07 - Measurement and Payment, and shall include full payment for all Work described in this Section.

Payment for cone adjustments shall include compensation for changes in height per the applicable Standard Details, unless otherwise directed by the Engineer. In no case will payment for both ring and cone adjustments be made for the same manhole.

Payment shall be made under the following unit:

ITEM	UNIT
Adjust Sanitary Sewer Manhole Cone	Each

SECTION 50.19 ADJUST SANITARY SEWER MANHOLE RING TO FINISH GRADE

Article 19.1 General

The Work under this Section consists of providing all operations pertaining to the adjustment of existing manhole rings to finish grade, All broken and/or missing manhole components are to be replaced with new materials furnished and installed by the Contractor in accordance with these Specifications.

Article 19.2 Material

All materials used in the adjustment of manhole rings shall conform to the requirements for manholes as outlined in Section 50.03 - Sanitary Sewer Manholes.

The Contractor may utilize Neenah R-1979 Series Manhole Adjusting Rings, or an approved equal, for adjusting the manhole to finished grade.

Article 19.3 Construction

The Contractor shall adjust the manhole rings in accordance with the applicable Standard Details. The Contractor shall set the adjusting rings in a bed of premolded plastic gasket material that meets AASHTO M-198, ASTM C990, or Federal Specification SS-S-210. The casting can be set in a bed of mortar with steel adjusting shims in the event the grade will not allow the premolded plastic gasket material. The steel shims shall be placed in four locations as a minimum and must be approved by the Engineer. Any damage to manholes resulting from construction under this Contract shall be repaired or the damaged portion replaced at the Contractor's expense.

Milling is an approved method of lowering the manhole grade. A horizontal milling process where as the casting is milled to lower the top to meet the finish grade of the street. This method must be submitted to the Engineer for approval.

Contractor shall adjust the manhole cone to finish grade prior to placement of pavement. Cutting of new asphalt for adjustments is not acceptable. Any adjustment(s) requiring cutting of new asphalt shall not be paid and shall be deducted from the plan quantity.

Article 19.4 Measurement

Manhole ring adjustments shall be measured as units, complete in place.

Article 19.5 Basis of Payment

Payment for this Work shall be in accordance with Division 10, Section 10.07 – Measurement and Payment, and shall include full payment for all Work described in this Section.

Payment for ring adjustment shall include full compensation for changes in height. In no case will payment for both ring and cone adjustments be made for the same manhole.

Payment shall be made under the following unit:

ITEM	UNIT
Adjust Sanitary Sewer Manhole Ring	Each

SECTION 50.20 REMOVE EXISTING SANITARY SEWER MANHOLE

Article 20.1 General

The Work under this Section consists of providing all operations pertaining to the removal and disposal or salvage of existing manholes.

Article 20.2 Construction

Materials that are to be salvaged shall be removed in a workmanlike manner and delivered to a site as directed by the Engineer. A disposal site for non-salvageable materials shall be provided by the Contractor.

Any excavation required in the removal shall be considered incidental to this item. The Contractor shall backfill the excavation with a suitable, non-frost susceptible material and compact it to not less than ninety-five percent (95%) of maximum density as directed by the Engineer. If additional material is required for backfill, it will be paid for under the Item "Furnish Trench Backfill." Existing pipes shall be suitably plugged and abandoned unless otherwise noted.

Article 20.3 Measurement

Removal of existing sanitary manholes will be measured as units.

Article 20.4 Basis of Payment

Payment for this Work shall be in accordance with Division 10, Section 10.07 - Measurement and Payment, and shall include full payment for all Work described in this Section.

Payment shall be made under the following units:

ITEM	UNIT
Remove Existing Sanitary Sewer Manhole	Each

SECTION 50.21 ADJUST CLEANOUT TO FINISH GRADE

Article 21.1 General

The Work under this Section consists of providing all operations pertaining to adjustment of existing cleanouts to finish grade. All broken and/or missing cleanout components are to be replaced with new materials furnished and installed by the Contractor in accordance with these Specifications.

Article 21.2 Material

All materials used in the adjustment of cleanouts shall conform to the requirements for cleanouts as outlined in Section 50.12 - Construct Sanitary Sewer Cleanout.

Article 21.3 Construction

The Contractor may be required to adjust more than one type of cleanout under this Contract. All adjustments will be accomplished as directed by the Engineer. Any damage to cleanouts resulting from construction under this Contract shall be repaired or the damaged portion replaced at the Contractor's expense. All joints and fittings shall be restrained.

Article 21.4 Measurement

Cleanout adjustments will be measured per unit, complete in place.

Article 21.5 Basis of Payment

Payment for this Work shall be in accordance with Division 10, Section 10.07 - Measurement and Payment, and shall include full payment for all Work described in this Section.

Payment shall be made under the following unit:

ITEM	UNIT
Adjust Cleanout to Finish Grade	Each

SECTION 50.22 SEWER CLOSED CIRCUIT TELEVISION INSPECTIONS

Article 22.1 General

The Work under this Section consists of providing all operations associated with video inspection and recording of sewer assets.

Sewer mainline Closed Circuit Television (CCTV) work is to be completed by a currently certified National Association of Sewer Service Companies (NASSCO) camera operator in the specialty of Pipeline Assessment and Certification Program (PACP). The sewer mainline CCTV video inspection is to code observations and defects in accordance with PACP reference manual (version 6.0.1).

Video inspections for other sewer assets (non-mainline) do not require NASSCO certification.

This Work may be required multiple times and at different phases of construction. Sewer line cleaning, flow control and atmospheric conditioning will be required to obtain access, ease camera travel, remove visual impediments and remove debris. Traffic control may be required to access sanitary sewer manholes, cleanouts, pipes and other sewer assets. The MOA makes no warranty as to the condition of the pipe, manholes or access points.

Article 22.2 Material

CCTV equipment includes vehicles, computers, software programs, viewing devices, cameras, cables, portable power sources, lights, blowers, winches and all related equipment needed to satisfactorily complete a CCTV inspection.

The camera is to process video in color with a lens having a focal distance between one inch (1”) and infinity (∞), be capable of autofocus, manual focus and have an adjustable iris. The in-pipe target is to be viewable with the camera at a perpendicular angle to the target and the camera at zero zoom. For cameras with zoom lens capability, calibration and in-pipe measurements are to be taken at zero zoom. Analog Video output and capture is to be a minimum of 400 lines per inch.

The camera is to be transporter mounted for six inch diameter (6”Ø) and larger pipe line inspections, have built in lighting with pan and tilt capabilities of 360º rotation and 270º tilt. Illumination is to be adjustable and capable of providing a clear and well lit picture. Lighting is to be planned and executed based upon the size and type of pipe being inspected. Push cameras may be used to video sewer services which are typically less than eight inches in diameter (8”Ø). Push cameras are to have built in lighting, be self-leveling, be flexible for navigating around bends, and have a sonde device. Push cameras may be used from the ground surface or transporter mounted for use from within the mainline pipe for lateral inspection. Push cameras are not to be used as the primary image source for pipes six inch diameter (6” Ø) and larger.

CCTV performed using digital high-resolution camera(s) equipped with wide angled lenses(s) that provide 360 degree spherical and side scanning capabilities that provide "unfolded" views of the pipe, and propelled by a transporter that travels faster than 30 feet per minute, may be used as an alternative to a pan and tilt camera / transporter. This alternative will only be used if the contractor can comply with all other requirements of this specification section.

Pole mounted cameras may be used to video manholes and pipe connections.

All in pipe equipment is to be certified to operate in conditions found in wet/submerged sewer pipes and manholes without adverse effects to the equipment or the sewer system. Typically this will require, but not limit, the camera to operate in grease, sludge, mud, gravel, one hundred percent (100%) humidity, and other adverse environments.

Article 22.3 Construction

Where required, the Contractor is to complete a CCTV inspection at the following points of construction;

- Condition Assessment – The primary goal of this inspection is to document the condition of an existing sewer asset through the use of PACP codes, video and photographic documentation. This information will assist engineers and planners to plan and prioritize any needed repairs.

- Pre-rehabilitation – This inspection takes place prior to the rehabilitation of a sewer asset to look for places that may interfere with the planned rehabilitation. This inspection does not require PACP coding. The video and photographic documentation is to be provided to the Engineer for review prior to beginning rehabilitation.

- Prior to Acceptance of New Pipe – Prior to acceptance of newly installed pipe a CCTV inspection is to look for deficiencies in the work. If no deficiencies are found the CCTV of sewer pipe is to set baseline condition of the newly installed pipe from which future CCTV inspections will used to document changes in the condition of the pipe.

- Post rehabilitation – This inspection takes place after rehabilitation of the pipe has been accomplished and will be used to determine Substantial Completion.

- Rehabilitation acceptance – This inspection will take place approximately one month prior to the end of the Warranty Period. It is the responsibility of the Contractor to request CCTV the rehabilitated sewer asset. The Warranty will be automatically extended to 30 days past the Rehabilitation Acceptance CCTV or Warranty expiration date, whichever is later.

The Engineer or their designee is to be provided unobstructed access to CCTV facilities from set up to tear down of the CCTV equipment. During the CCTV inspection the

Engineer or their designee may require the Contractor to backup, adjust the camera and investigate with the CCTV equipment any points they may deem of interest.

The Engineer will review the CCTV video and PACP observations and defect codes to determine conformance with the specification. The Contractor is to correct deficiencies where the video and coding do not meet the standards stated herein at no additional cost to the Owner.

1. Sewer Main CCTV Inspection

   The camera is to move through the sewer pipe in a downstream direction at a uniform rate stopping and recording all joints and points of coding. At no time is the rate to exceed a rate of thirty feet per minute (30 ft/min). When the camera is not able to complete the inspection, after several attempts and cleaning of the sewer pipe, then the inspection of the current segment is to be abandoned and started from a reverse setup going against the sewer flow.

   The camera lens is to be kept clear of condensation, oils, grease and debris during the CCTV inspection. Lighting intensity is to be adjusted to minimize glare. Picture quality shall be adjusted to provide a clear in-focus picture of the entire periphery of the pipeline.

   The Contractor is to record and code the sewer mainline inspection using PACP codes in a NASSCO certified software. The Engineer will provide the sewer main names to the Contractor. The Contractor is to request a list of the NASSCO PACP non-mandatory fields that are required to successfully complete the CCTV inspection from the Engineer. If an unknown/new access point is found or created to CCTV the sewer pipe, then the Contractor is to obtain the name from the Engineer.

   The Contractor is to complete a thorough examination of stopping points prior to continuing the inspection. The following partial list of required stopping points are provided below and a more complete list is provided in the NASSCO PACP requirements.

   - Manholes- Pipe penetrations, flow channel, bench, and barrel sections are to be videoed.
   - Joints – camera shall rotate 360º to provide a potential view of all portions of the joint. The rotation is to occur at a metered rate over no less than twenty seconds.
   - Cracks and fractures – provide a close up view of the point of interested (POI) and a perspective view indicating the extent and/or length of the POI and how close the nearest pipe joint is.
   - Holes, breaks, lining failures and/or deformations – provide a close up and perspective view of the POI. Adjust the view to make apparent any voids behind the POI.
   - Service connects – inspect the hole cut into the pipe and associated repairs at all service connections.

- Changes in alignment, sags or crests – The view should be long enough and lit such that the change can be estimated.

Video and photographs are to be captured but not coded for sewer assets that are not sewer mainlines.

2. Sewer Cleaning

The Contractor is to clean the sewer lines for sewer CCTV by removing grit, loose solids, grease, and any debris that is present. All debris is to be trapped at the end of the CCTV inspection run and properly hauled off and disposed.

Sewer line cleaning is to be accomplished using a high velocity jet or mechanically powered equipment. Selection of the equipment used is to be based on the condition of the sewer line at the time the work commences.

The Contractor is to take due care to avoid damaging the pipe or impact connected sewer customers.

Cleaning is to be completed by the Contractor within 144 hours and no less than one hour prior to inspection.

3. Flow Control

CCTV video will not be accepted when the water depth is greater than twenty percent (20%) of the pipe diameter for pipes twelve inch in diameter (12"∅) and smaller. Larger pipes will have an additional five percent (5%) allowance.

Flow control is required for the successful completion of the CCTV inspection. The Contractor is to work with property owners, schedule inspections at low usage times, assist with a high velocity hydraulic jet, provide sewer flow control or any combination of the above to meet the water depth requirement.

4. Distance Measurement

The distance shall be measured between the exit of the start manhole and the entrance of the finish manhole for a true measurement of the length of the pipe segment, as required by PACP. It shall be recorded in standard units and the video display readout shall display units to one-tenth of a foot. The camera cable shall be retracted to remove slack to ensure an accurate footage reading. The cable footage counter is to be accurate to the nearest third of a foot (1/3') except where a higher accuracy is required to reinstate services. Accuracy to reinstate services is to be to the nearest inch.

5. Deliverables

A minimum of two digital photos are to be taken of each defect, one showing a perspective view and one showing a close up view. The photo is to have on-screen information such as the distance into the inspection, the starting asset number and the ending asset number.

The Contractor is to submit to the Engineer within five days of completing the CCTV inspection video files, photographs, and the sewer main inspection database.

The database will be in an unmodified NASSCO-PACP Certified database with a MS Access format. Photographs, video, folders, and other data will be properly referenced within the contractor's database. This integration will provide a seamlessly export from the contractor's NASSCO-certified PACP software and then import into the AWWU's NASSCO-certified PACP software. CCTV inspection data from the contractor that cannot be seamlessly imported will be cause for rejection.

Deliverables may be provided on CD's, DVD's USB Thumb Drives, or portable hard drive.

Recorded images showing steam, inadequate lighting, or poor image quality will be cause for rejection.

If the Engineer determines that corrections are needed, the documentation is to be resubmitted after corrective action has taken place.

Article 22.4 Measurement

CCTV measurement is not to overlap and is to occur once per bid item under which it is being paid for regardless of the number of times the CCTV camera views any one piece of pipe during that pay item. Measurement of footage is to be based on footage counter shown in the video.

Article 22.5 Payment

Payment for this Work shall be in accordance with Division 10, Section 10.07 - Measurement and Payment, and shall include full payment for all Work described in this Section. Payment includes all labor, tools, equipment, apparatus and incidentals required to complete the Work.

The Work includes reverse setups, tear downs, relocation, overlapping video footage per bid item, lost or damaged equipment, property owner coordination, jetting during CCTV activities and other incidental items necessary to complete the Work and no additional payment will be made. Sewer flow control is considered incidental, unless provided for as a bid item.

Payment shall be made under the following units:

ITEM	UNIT
Sewer line cleaning for CCTV	Linear Foot
Condition Assessment CCTV	Linear Foot
Acceptance of New Pipe CCTV	Linear Foot
Pre-rehabilitation CCTV	Linear Foot
Post Rehabilitation CCTV	Linear Foot
Rehabilitation Acceptance CCTV	Linear Foot

MUNICIPALITY OF ANCHORAGE
STANDARD SPECIFICATIONS

DIVISION 50
SANITARY SEWERS
STANDARD DETAILS

STANDARD CONSTRUCTION SPECIFICATIONS
MISCELLANEOUS
DIVISION 50
INDEX OF STANDARD DETAILS

50-1	Sanitary Manhole - Type A - Pipe 8” to 24”
50-2	Sanitary Manhole - Type B - Pipe Dia 30” to 36”
50-3	Sanitary Manhole - Type C - Pipe Dia 40” to 48”
50-4	Type A and B Manhole Base Plan
50-5	Manhole Heights
50-6	Manhole Step
50-7	Sewer Service Connect for On-Site Lift Station 1-1/2” and 2”
50-8	Manhole Cover
50-9	Manhole Frame
50-10	Watertight Manhole Ring
50-11	Manhole Drop Connection
50-12	Typical Beaver Slide Manhole
50-13	Sanitary Sewer Service (Complete)
50-14	Lateral Connection to Concrete Pipe
50-15	Service Riser/Top Entry (for construction of new deep sewer - ductile iron)
50-16	Sanitary Sewer Service Connection (R.O.W. Only)
50-17	Sanitary Sewer Cleanout Cover
50-18	Sanitary Cleanout
50-19	Special Manhole and Cleanout Detail (inside protective well radius)
50-20	Special Manhole and Cleanout Detail (inside protective well radius)
50-21	Special Manhole and Cleanout Detail (inside protective well radius)
50-22	Horse Shoe Sanitary Sewer Manhole Detail
50-23	Contractor Field Installation Notes Sanitary Example
50-24	Manhole Cone Adjustment
50-25	Manhole Ring Adjustment

NOTE:
1. BACKFILL AROUND MANHOLE WITH NFS MATERIAL (3 FT MIN).

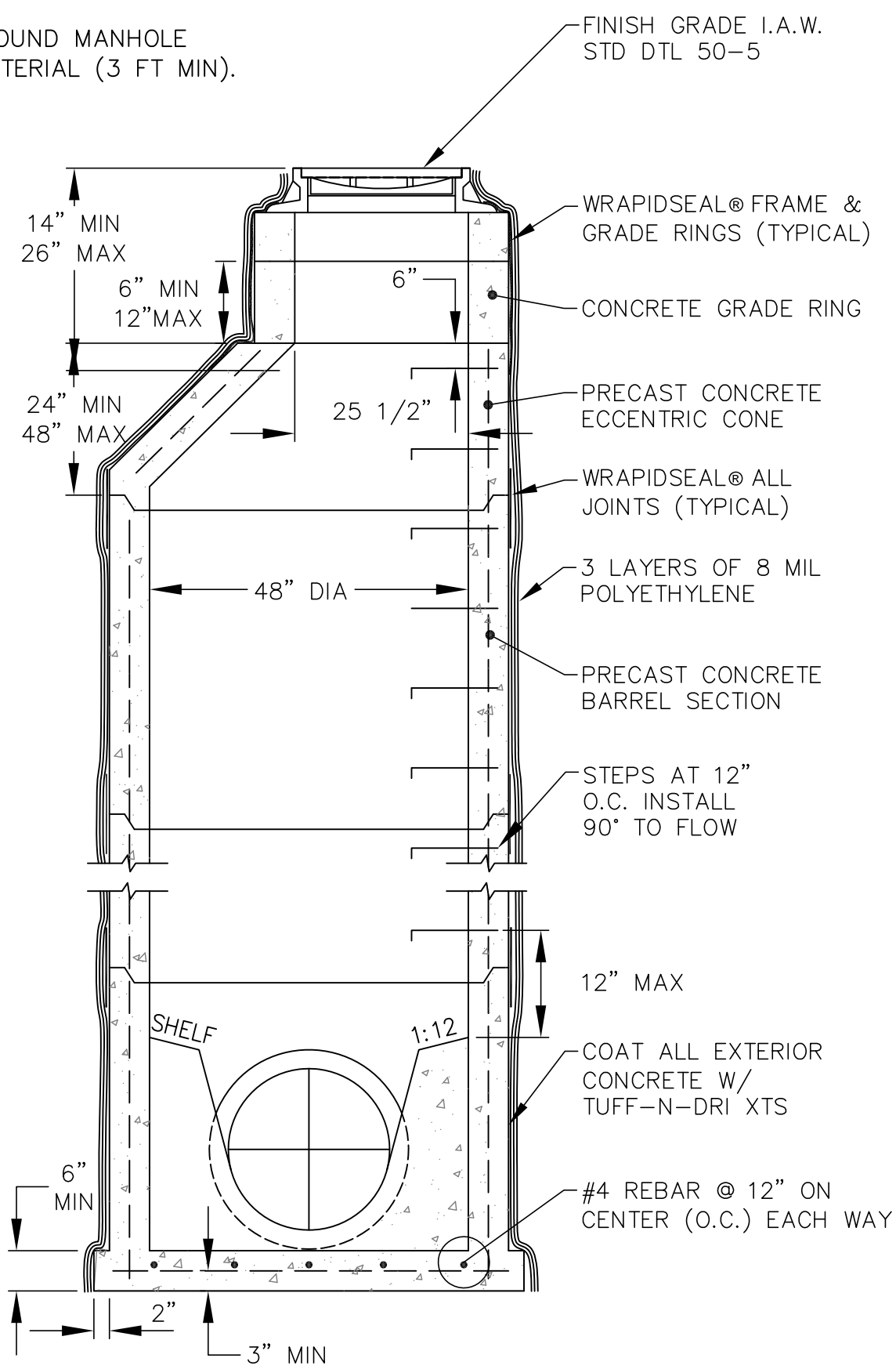

REVISION: 12/09 ADDED REFERENCE TO STANDARD DETAIL 50-8 1/12 REMOVED 50-10 REF, ADDED WRAPID LANGUAGE 1/13 REDRAFTED

MUNICIPALITY OF ANCHORAGE	SCALE: NTS APPROVED: REVISED: 1/13	**SANITARY MANHOLE TYPE 'A' PIPE 8" TO 24"**	SECTION # 50.03 DETAIL # 50-1

NOTE:
1. BACKFILL AROUND MANHOLE WITH NFS MATERIAL (3 FT MIN).

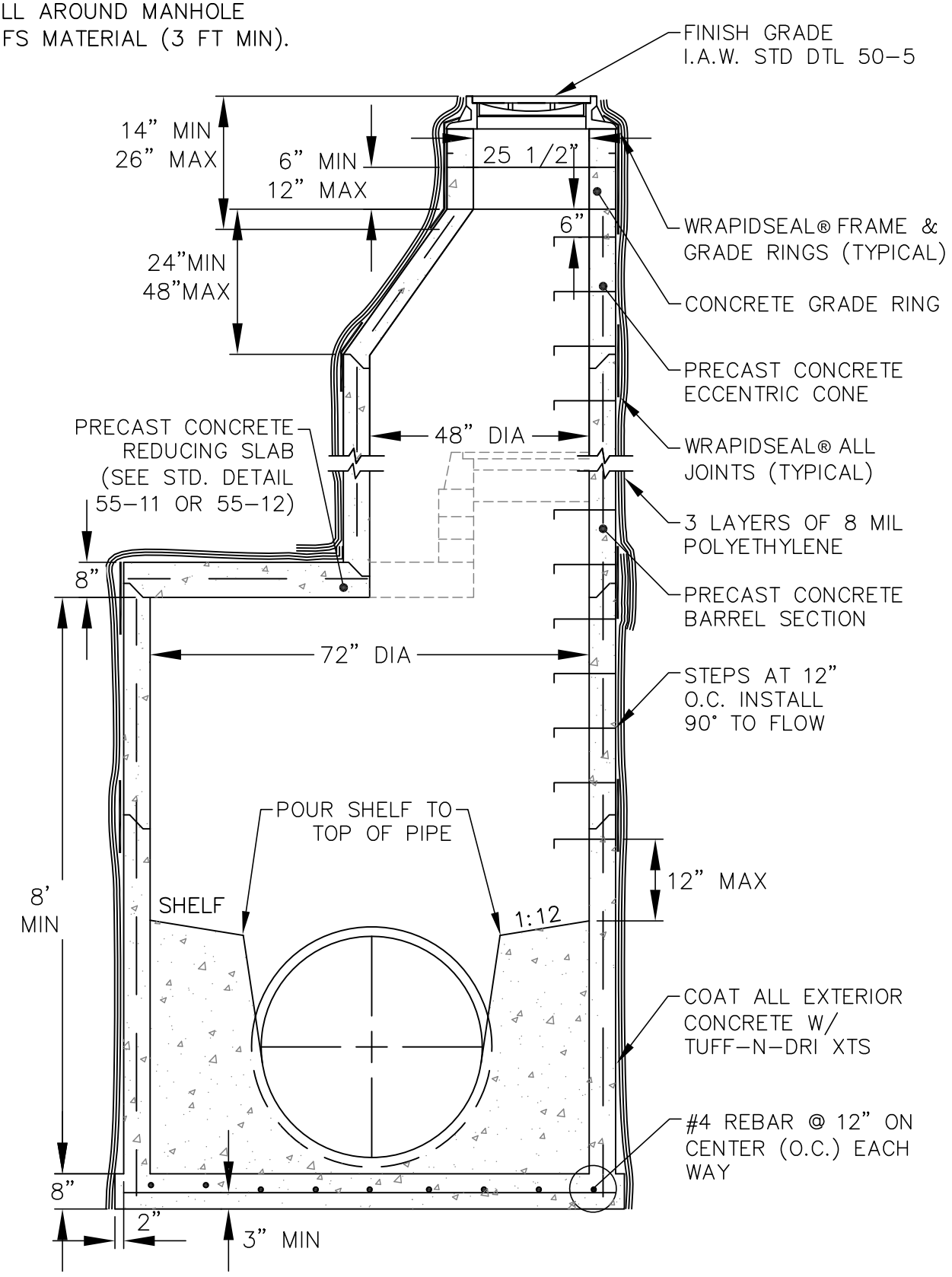

REVISION: 3/12 MODIFIED NOTE 6, 7, & 8 TO INCORPORATE WRAPID SEAL® 1/13 REDRAFTED

MUNICIPALITY OF ANCHORAGE	SCALE: NTS APPROVED: REVISED: 1/13	**SANITARY MANHOLE TYPE B PIPE DIA. 30" TO 36"**	SECTION # 50.03 DETAIL # 50–2

NOTE:
1. BACKFILL AROUND MANHOLE WITH NFS MATERIAL (3 FT MIN).

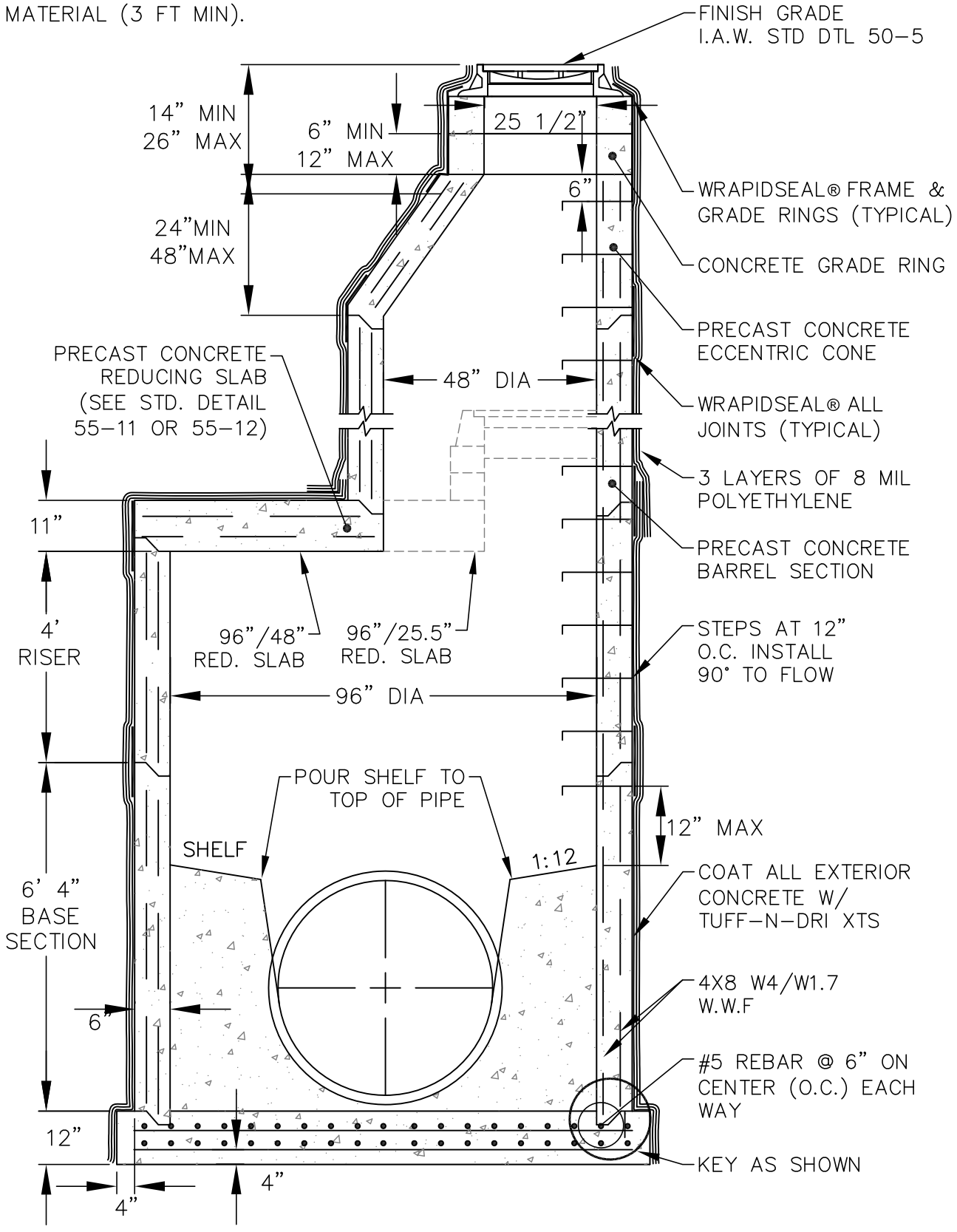

REVISION: 3/12 MODIFIED NOTE 6, 7, & 8 TO INCORPORATE WRAPID SEAL® 1/13 REDRAFTED

MUNICIPALITY OF ANCHORAGE	SCALE: NTS APPROVED: REVISED: 1/13	**SANITARY MANHOLE TYPE C PIPE DIA. 40" TO 48"**	SECTION # 50.03 DETAIL # 50-3

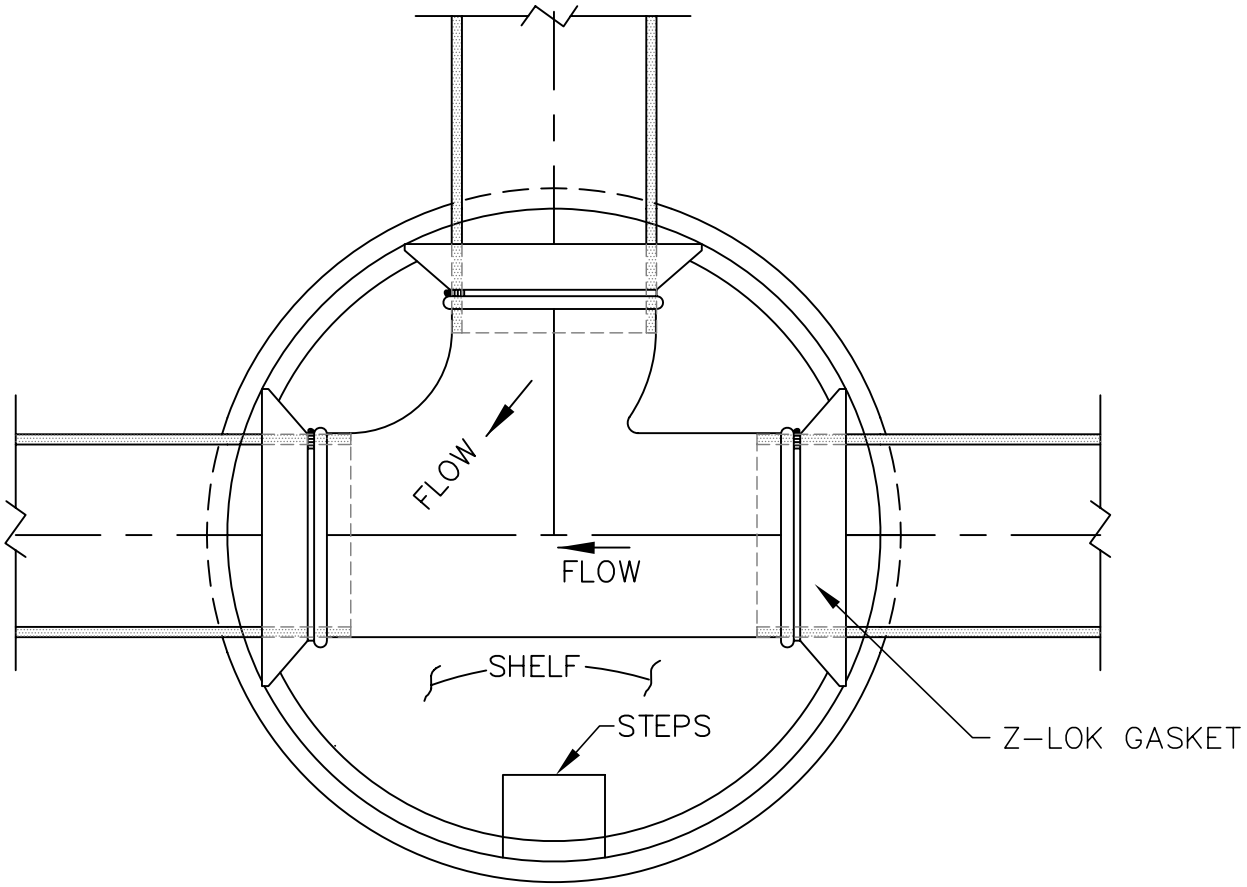

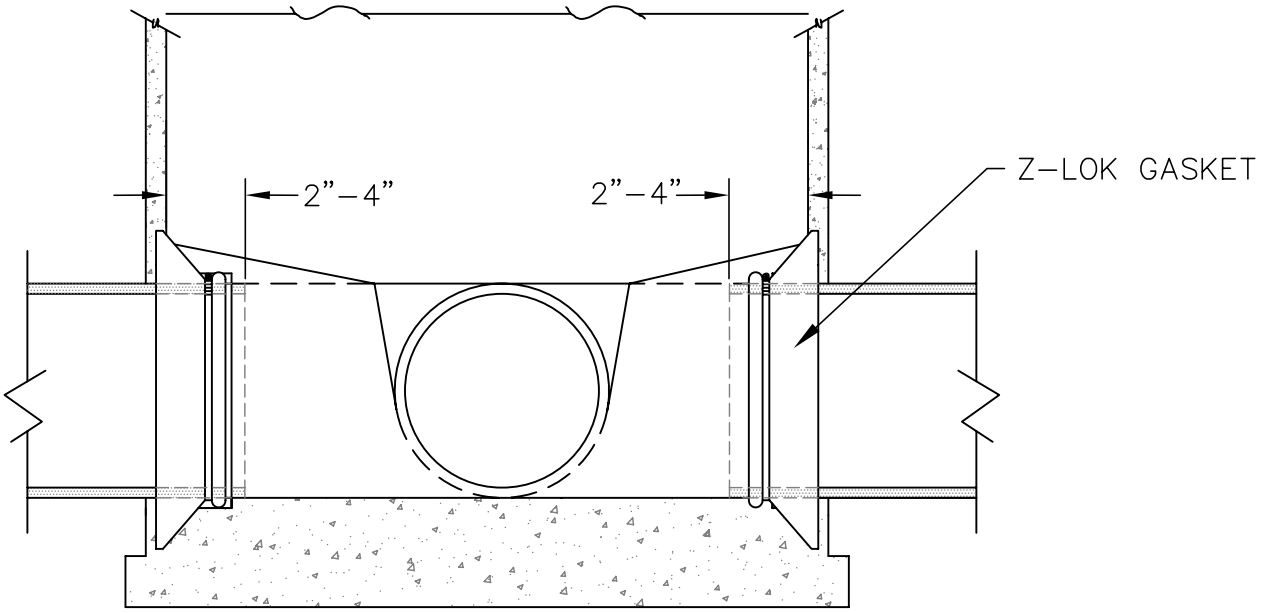

MUNICIPALITY OF ANCHORAGE	SCALE: NTS APPROVED: REVISED: 10/08	**TYPE A AND B MANHOLE BASE PLAN**	SECTION # 50.03 DETAIL # 50–4

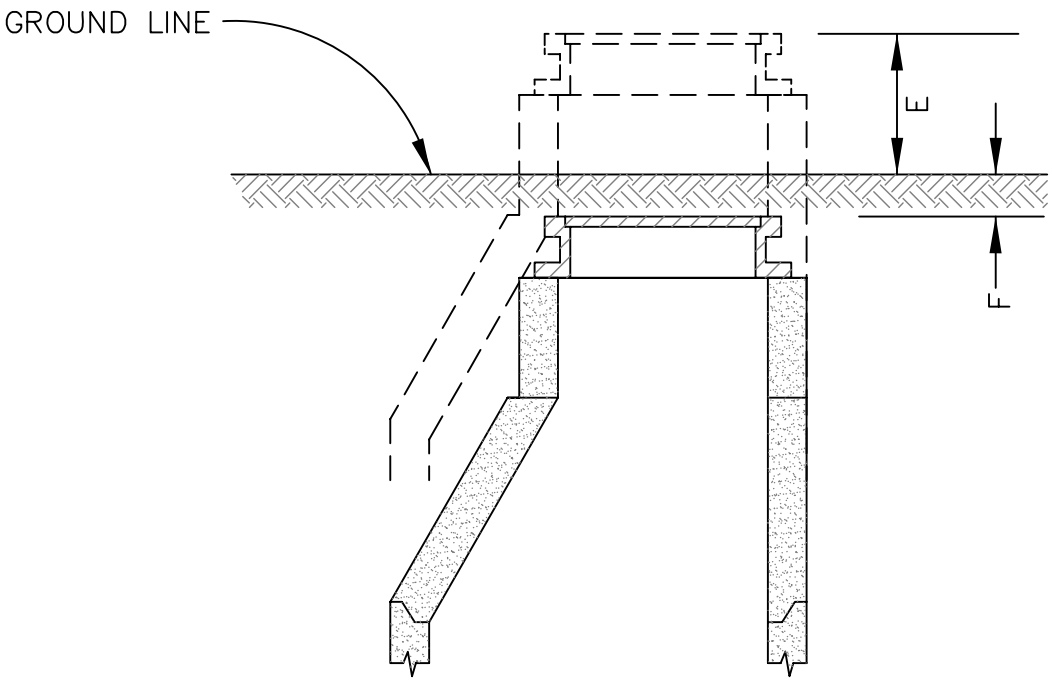

LOCATION	E	F
BACKYARDS, GRAVEL STREETS, AND ALLEY AREAS WHERE TRAVELED.		4"–8"
UNDEVELOPED AND SWAMPY AREAS.	24" MIN	
HIGHWAY R.O.W.S OUTSIDE TRAFFIC AREAS.	6"	
PAVED STREETS.		1/2"

MUNICIPALITY OF ANCHORAGE	SCALE: NTS APPROVED: REVISED: 10/07	**MANHOLE HEIGHTS**	SECTION # 50.03 DETAIL # 50–5

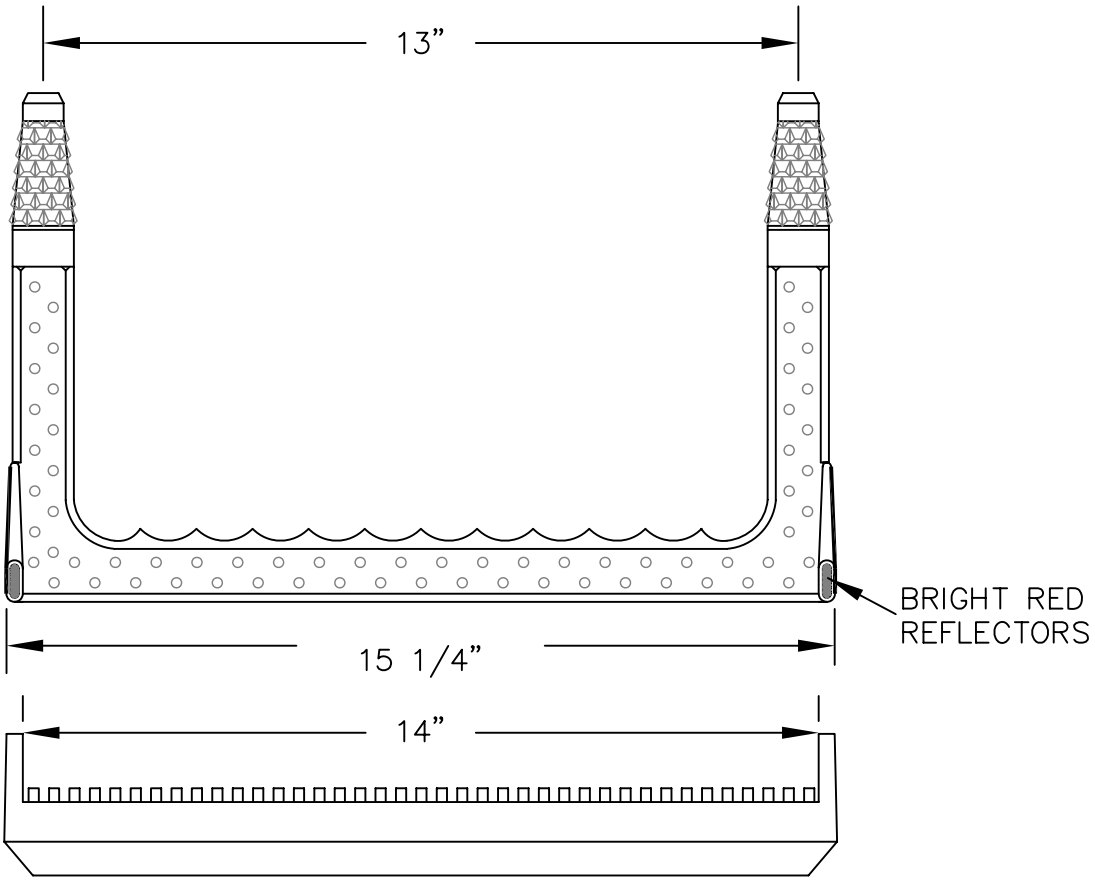

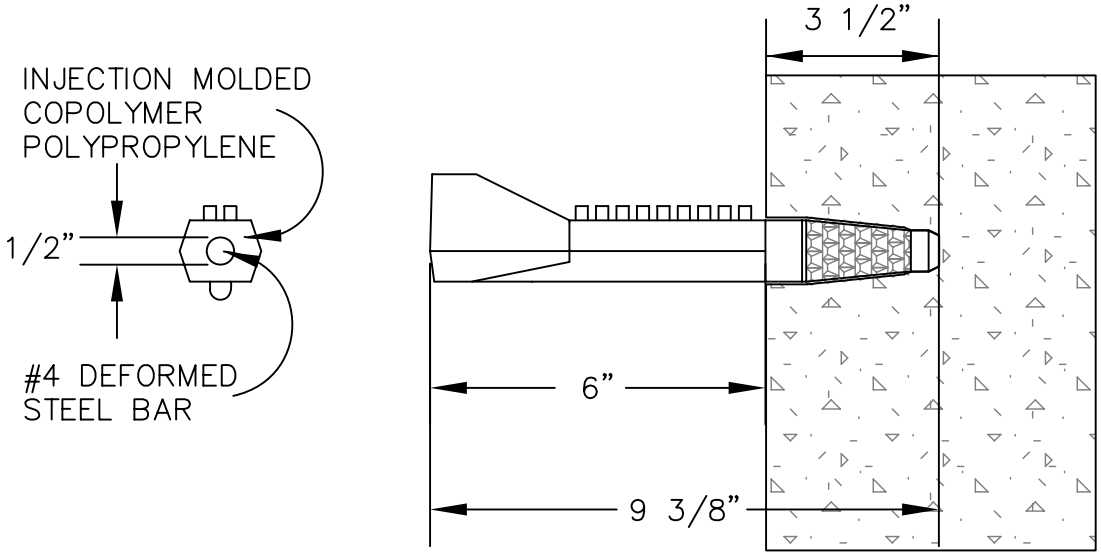

NOTE:

1. DRIVE RUNG INTO PREFORMED OR DRILLED HOLES WITH A 6 TO 10 LB. SLEDGE HAMMER, AFTER CONCRETE IS CURED TO 3000 PSI MIN.

2. THE INSTALLED STEP SHALL RESIST A PULLOUT FORCE OF 1500 LBS.

MUNICIPALITY OF ANCHORAGE	SCALE: NTS APPROVED: REVISED: 10/07	**MANHOLE STEP**	SECTION # 50.03 DETAIL # 50–6

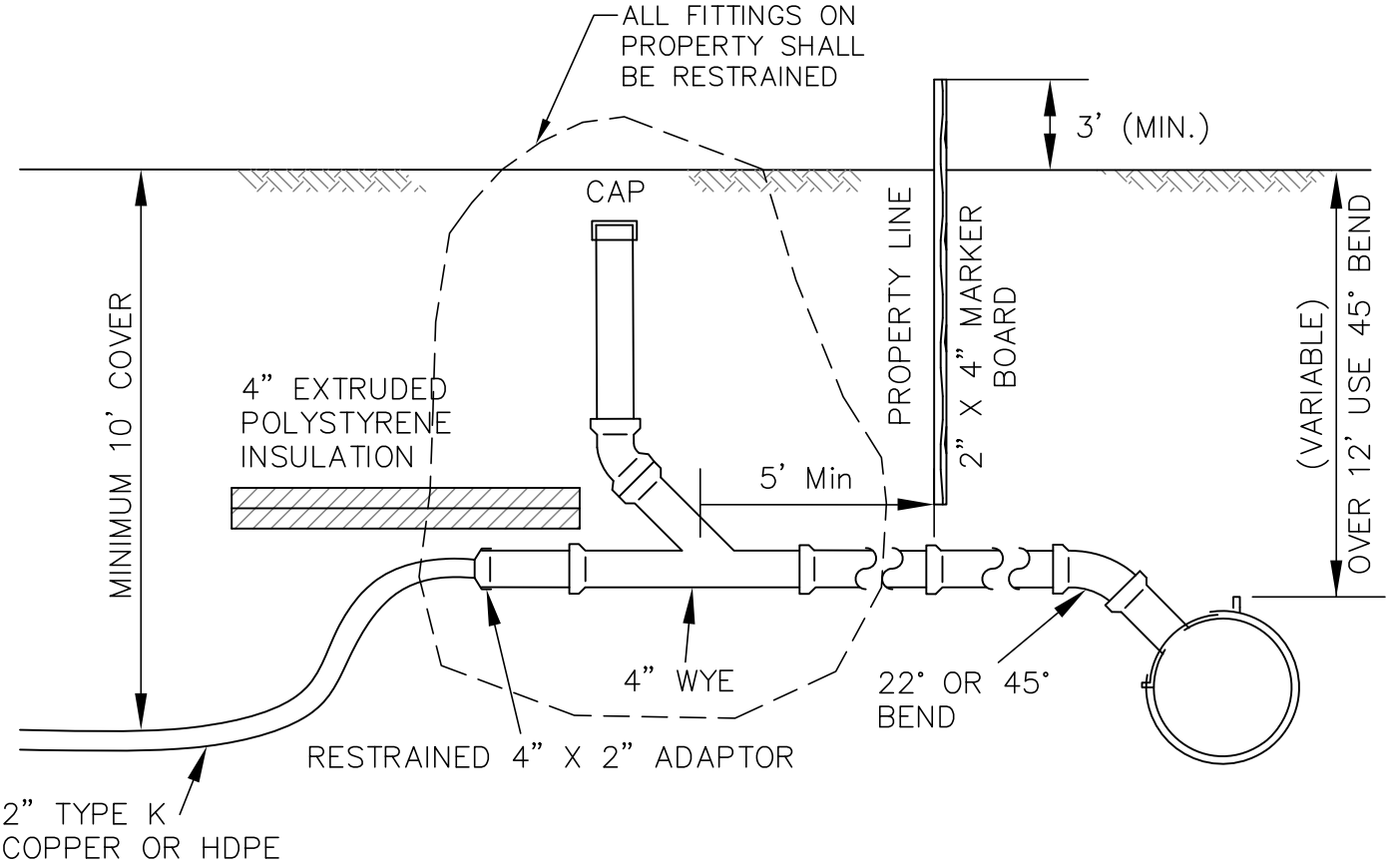

NOTES:

1. ROMAC STYLE CB SEWER SADDLE SHALL BE USED ON ALL PIPE.
2. TYPE "K" COPPER PIPE SHALL BE USED FOR ALL FORCE MAIN PIPE INSTALLATIONS OF 10–FOOT DEPTH OR MORE. HDPE ARCTIC PIPE SHALL BE USED FOR ALL FORCE MAIN PIPE INSTALLATIONS OF DEPTH LESS THAN 10–FOOT.
3. THE USE OF HDPE ARCTIC PIPE WITH ELECTRIC HEAT TRACE SHALL ONLY BE USED WITH PRIOR WRITTEN APPROVAL BY AWWU ENGINEERING. ENDS OF HEAT TRACE CHANNEL SHALL BE SEALED WATER TIGHT.
4. RIGID BOARD INSULATION SHALL BE HIGH DENSITY EXSTRUDED POLYSTYRENE, MIN. 60 P.S.I., EQUIVALENT TO R–20 PER 4–INCH THICKNESS.

MUNICIPALITY OF ANCHORAGE	SCALE: NTS APPROVED: REVISED: 3/12	SEWER SERVICE CONNECT FOR ON-SITE LIFT STATION 1-1/2" AND 2"	SECTION # 50.10 DETAIL # 50–7

REVISION: 12/09 REMOVED DETAIL A & ADDED ADD'L RESTRAINED FITTING INFORMATION; 3/12 CHANGED R-18 TO R-20

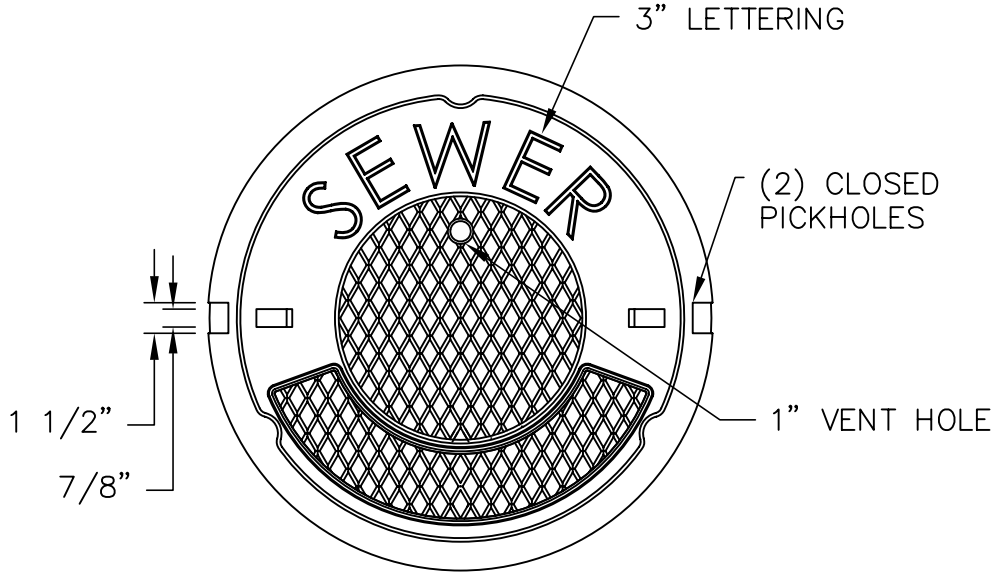

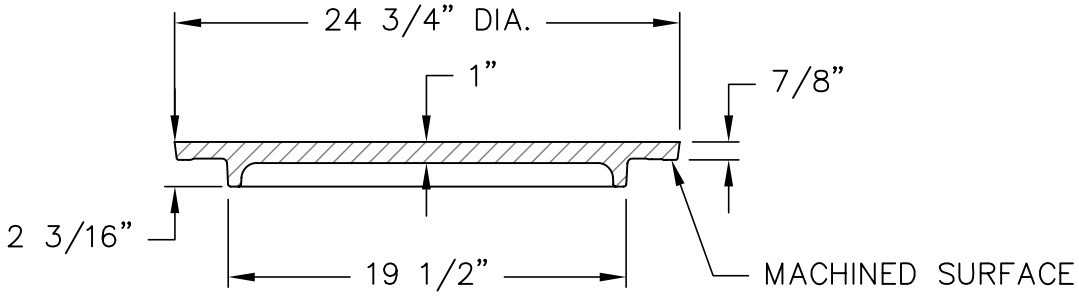

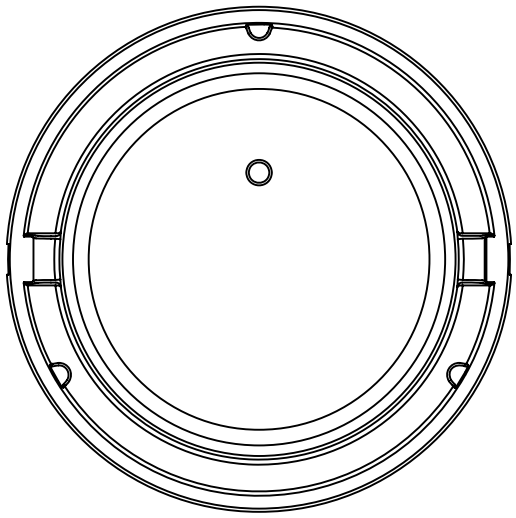

MUNICIPALITY OF ANCHORAGE	SCALE: NTS APPROVED: REVISED: 3/08	**MANHOLE COVER**	SECTION # 50.03 DETAIL # 50–8

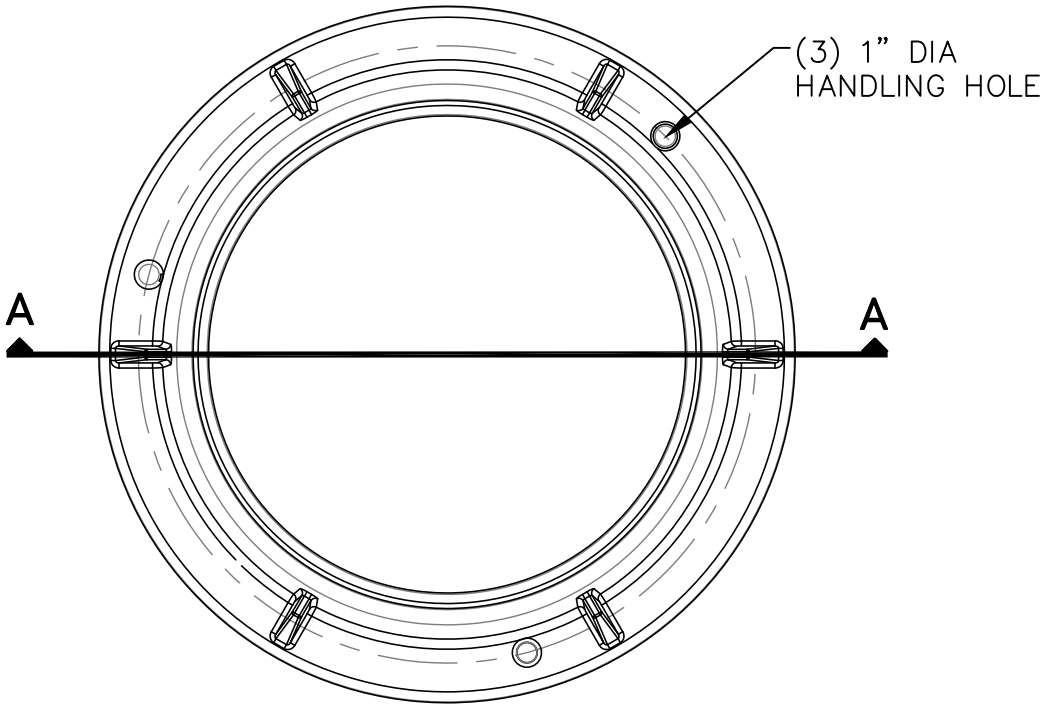

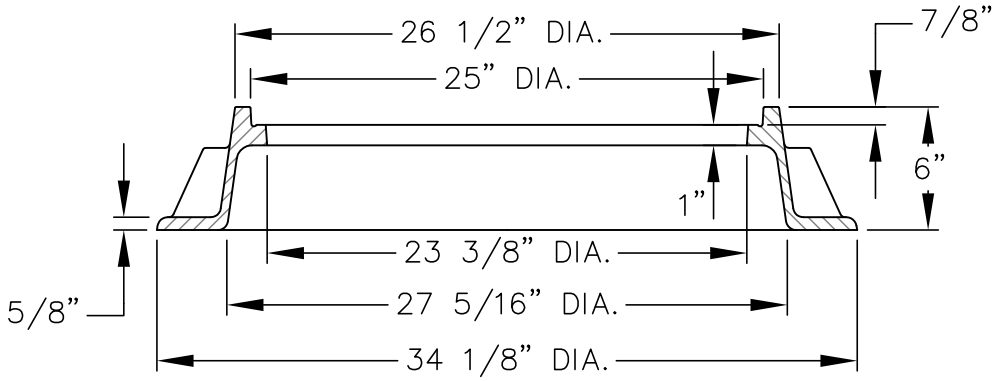

SECTION AA

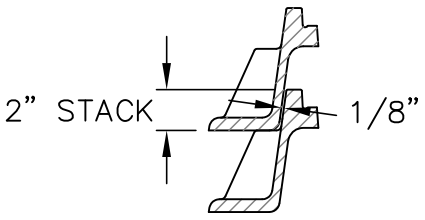

STACKING DETAIL

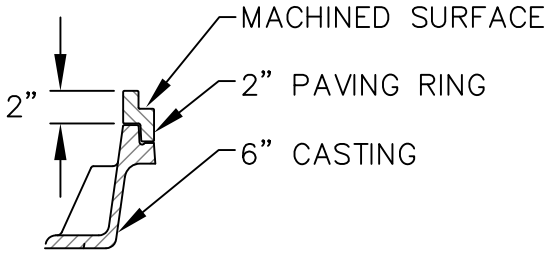

PAVING RING DETAIL

REVISION: 1/13 ADDED PAVING RING DETAIL

MUNICIPALITY OF ANCHORAGE	SCALE: NTS APPROVED: REVISED: 1/13	**MANHOLE FRAME**	SECTION # 50.03 DETAIL # 50–9

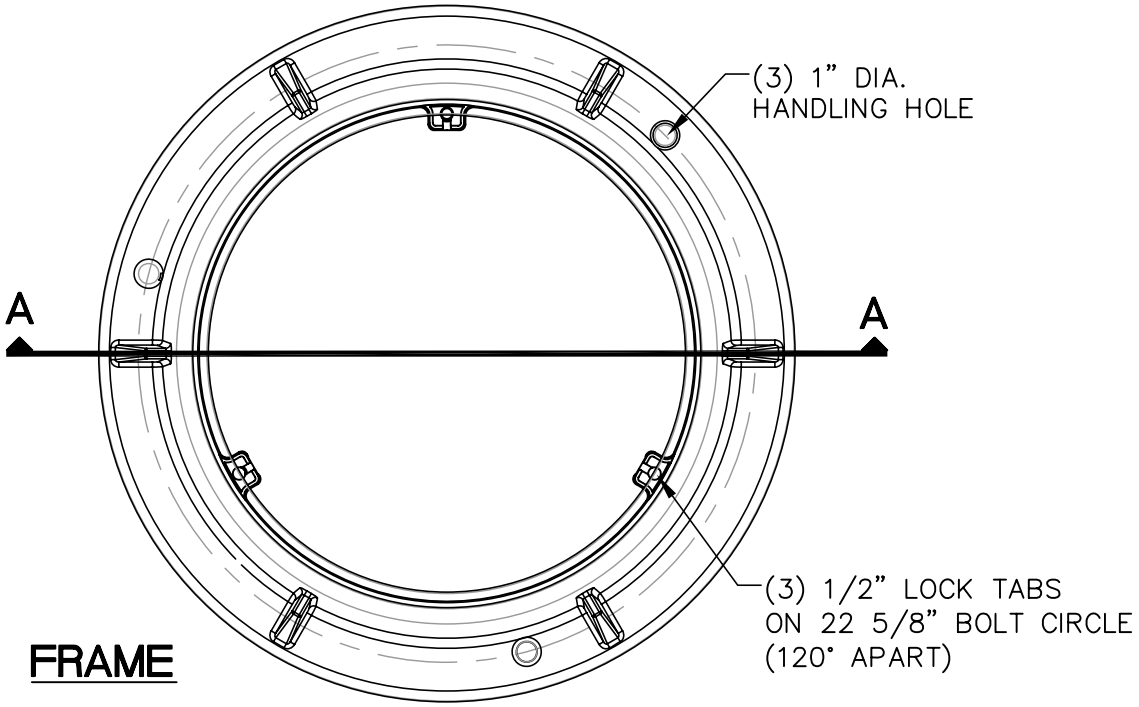

FRAME

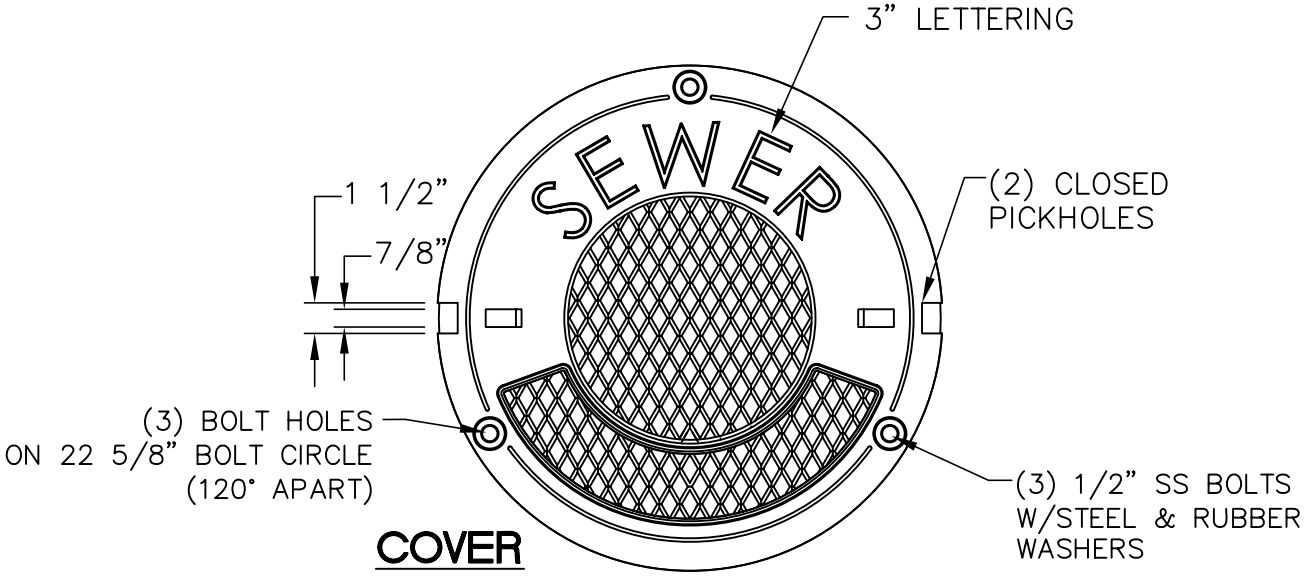

COVER

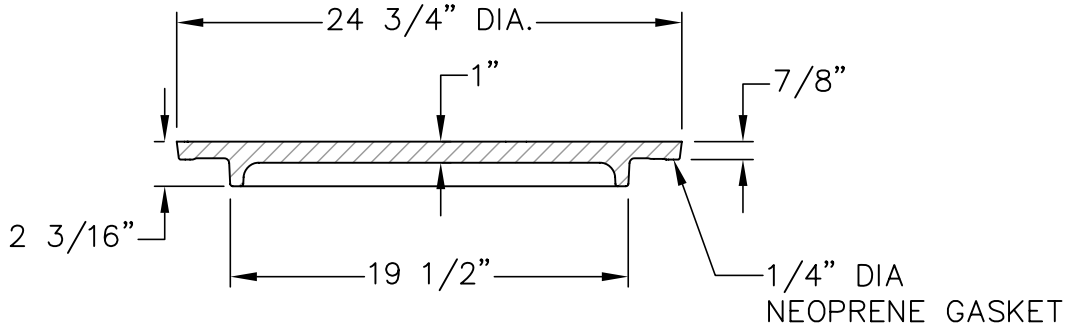

SECTION AA

MUNICIPALITY OF ANCHORAGE	SCALE: NTS APPROVED: REVISED: 12/09	WATERTIGHT MANHOLE FRAME AND COVER	SECTION # 50.04 DETAIL # 50–10

REVISION: 12/09 REPLACED WITH NEW STANDARD

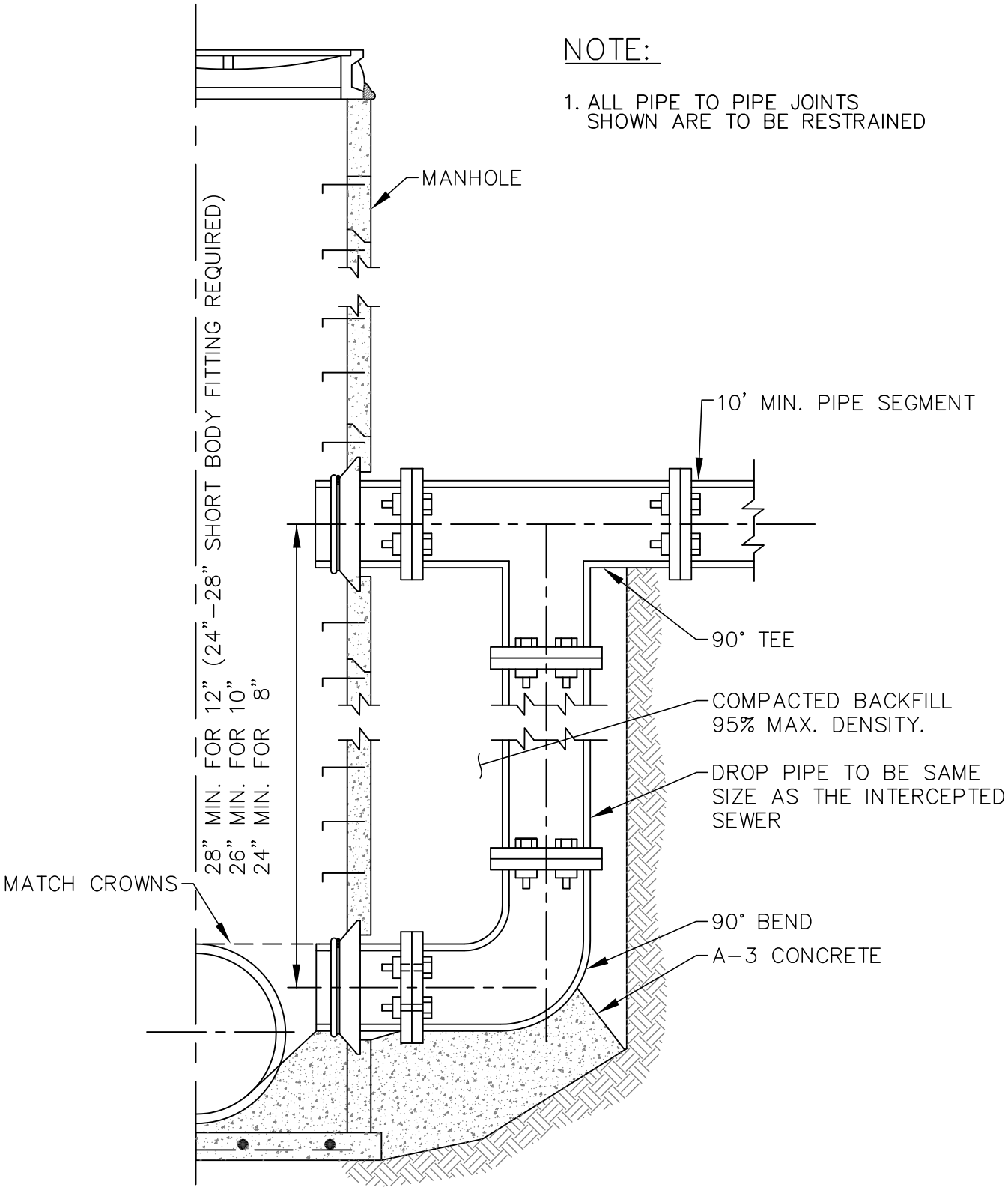

REVISION: 12/09 ADDED "OR LESS" TO 8" 1/13 REDRAFTED

MUNICIPALITY OF ANCHORAGE	SCALE: NTS APPROVED: REVISED: 1/13	**MANHOLE DROP CONNECTION**	SECTION # 50.06 DETAIL # 50-11

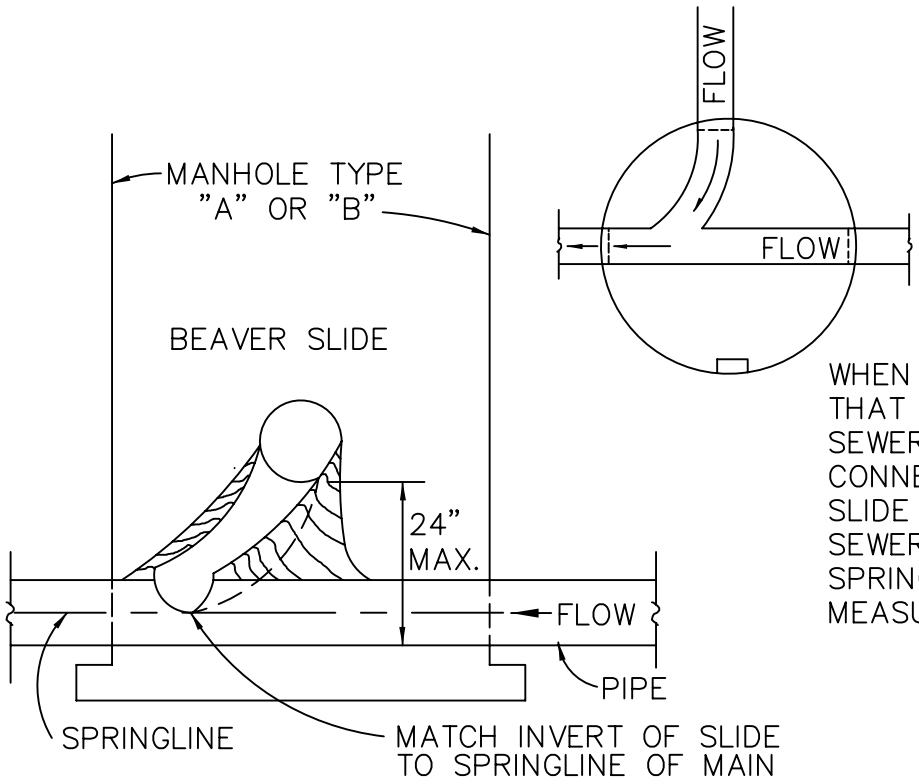

WHEN INSTALLING A BEAVER SLIDE THAT INTERCEPTS AN EXISTING SEWER AT A RIGHT ANGLE, THE CONNECTING INVERT OF THE BEAVER SLIDE IS TO INTERCEPT THE EXISTING SEWER SLIGHTLY ABOVE THE SPRINGLINE AS SHOWN. DISTANCE MEASURED FROM INVERT TO INVERT.

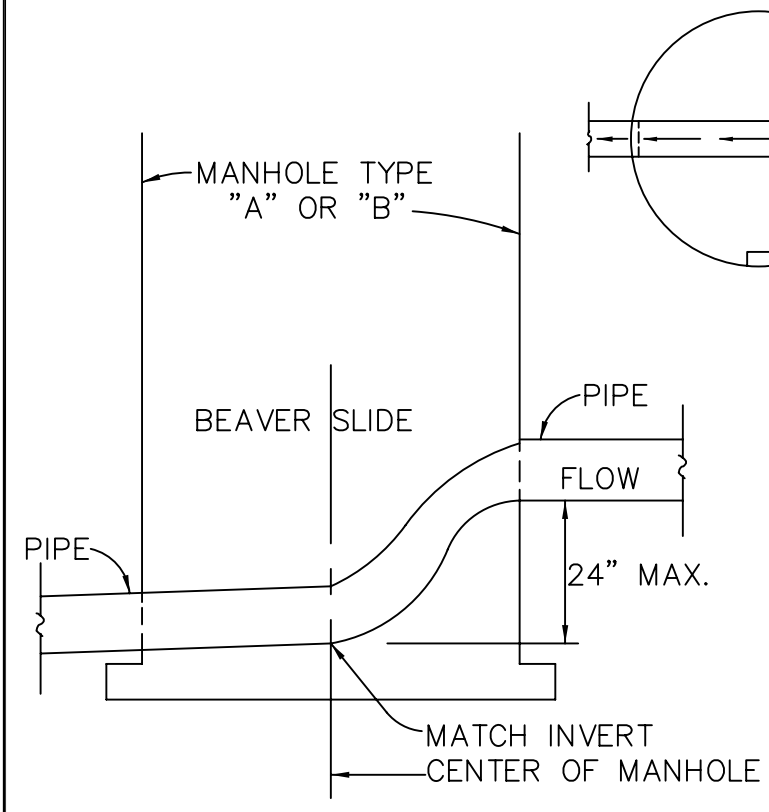

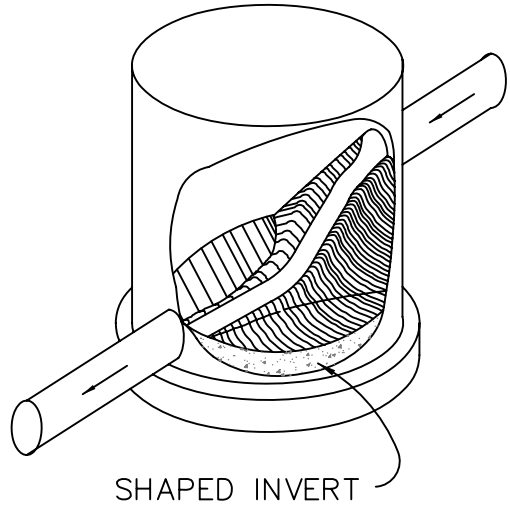

WHEN INSTALLING A BEAVER SLIDE WHERE THE FLOW IS STRAIGHT THROUGH THE MANHOLE, THE BEAVER SLIDE IS TO MATCH THE INVERT OF THE EXISTING LINE AND NOT TO EXTEND MORE THAN HALF–WAY THROUGH THE MANHOLE. DISTANCE MEASURED FROM INVERT TO INVERT.

PREMIX MORTAR PROHIBITED

MUNICIPALITY OF ANCHORAGE	SCALE: NTS APPROVED: REVISED: 3/08	**TYPICAL BEAVER SLIDE MANHOLE**	SECTION # 50.07 DETAIL # 50–12

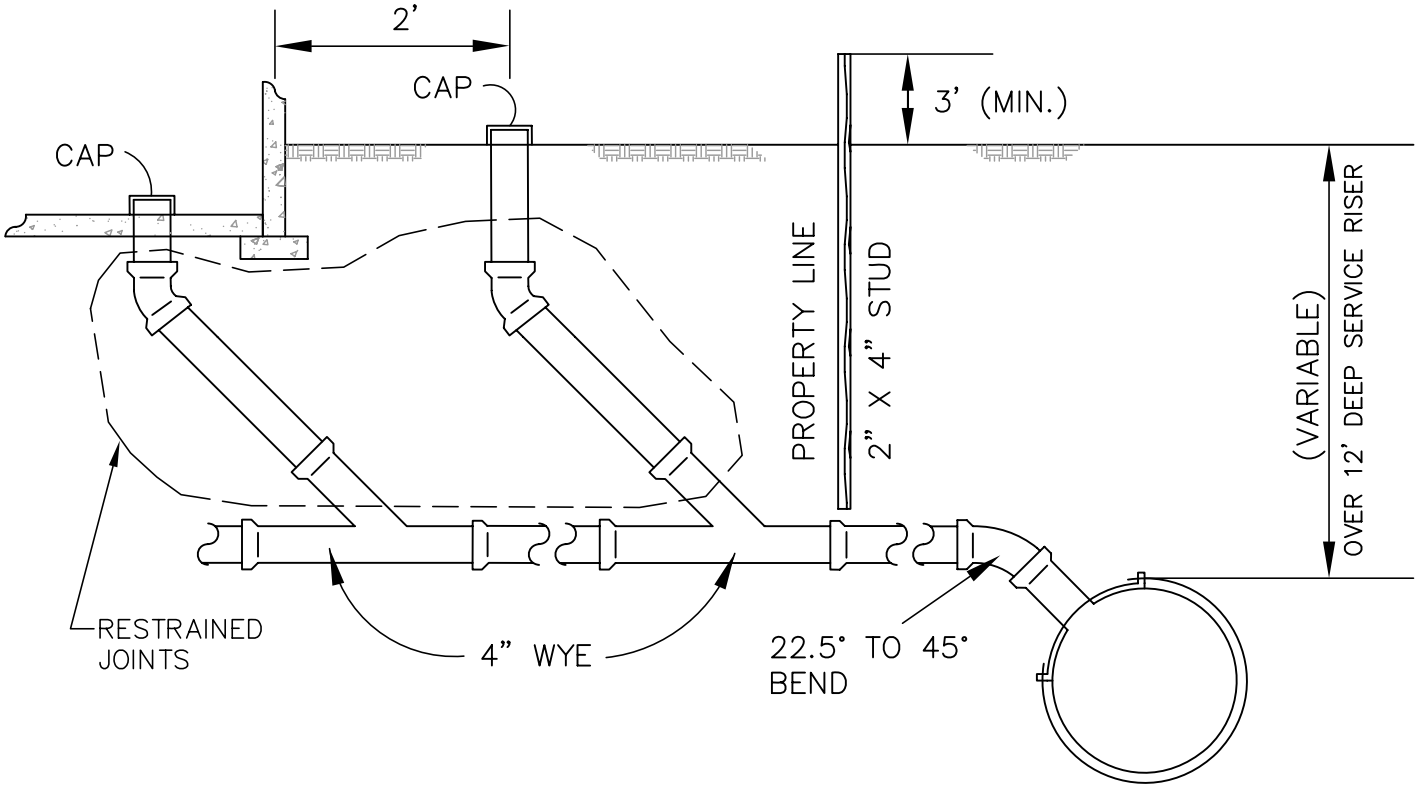

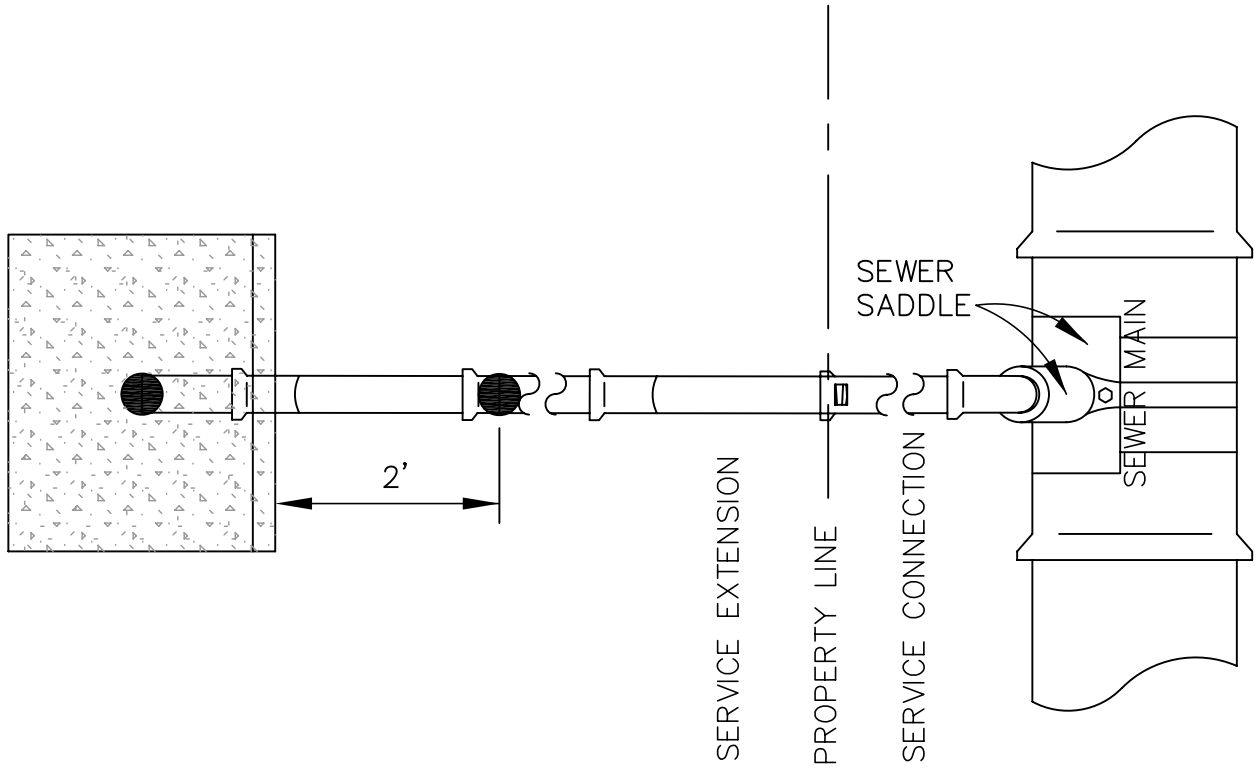

REVISION: 1/10 ADDED ADD'L RESTRAINED FITTING INFORMATION

MUNICIPALITY OF ANCHORAGE	SCALE: NTS APPROVED: REVISED: 1/10	**SANITARY SEWER SERVICE (COMPLETE)**	SECTION # 50.09 DETAIL # 50–13

USE MORTAR TO FORM A WATERTIGHT SEAL.

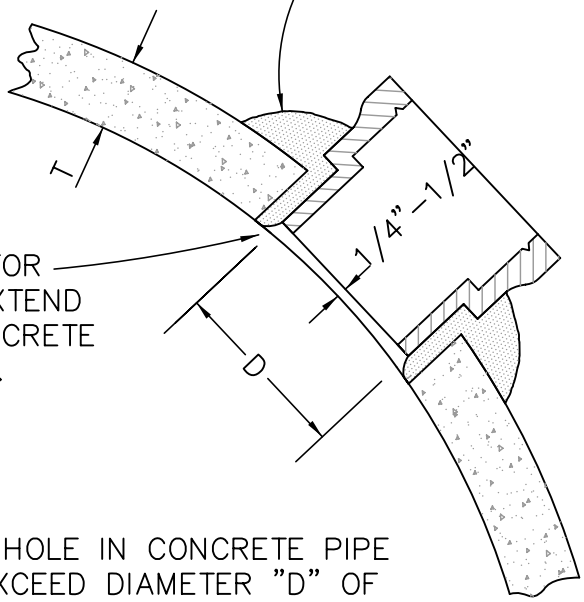

C. I. CONNECTOR SHALL NOT EXTEND INTO THE CONCRETE PIPE INTERIOR.

DIAMETER OF HOLE IN CONCRETE PIPE SHALL NOT EXCEED DIAMETER "D" OF THE C.I. CONNECTION PLUS 2".

D.I.P. PIPE SHALL BE USED BETWEEN M.H. & TRUNKLINE. USE 22 1/2° OR 11 1/2° BENDS.

THE EXISTING GROUND AROUND THE CONC. TRUNK SHALL BE DISTURBED AS LITTLE AS POSSIBLE.

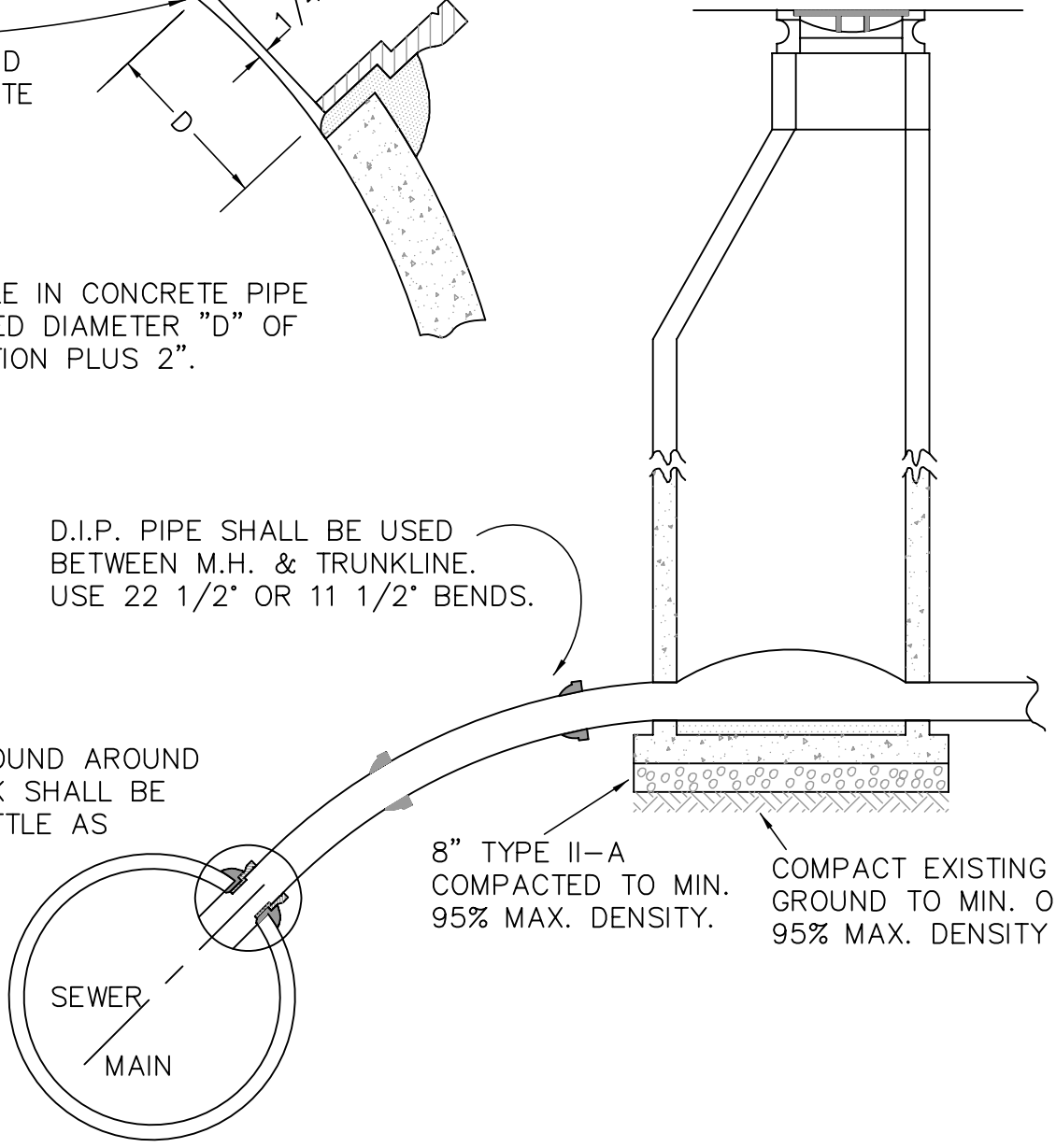

8" TYPE II–A COMPACTED TO MIN. 95% MAX. DENSITY.

COMPACT EXISTING GROUND TO MIN. OF 95% MAX. DENSITY

REVISION: 12/09 WEATHERTIGHT TO WATERTIGHT

MUNICIPALITY OF ANCHORAGE	SCALE: NTS APPROVED: REVISED: 12/09	**LATERAL CONNECTION TO CONCRETE PIPE**	SECTION # 50.08 DETAIL # 50–14

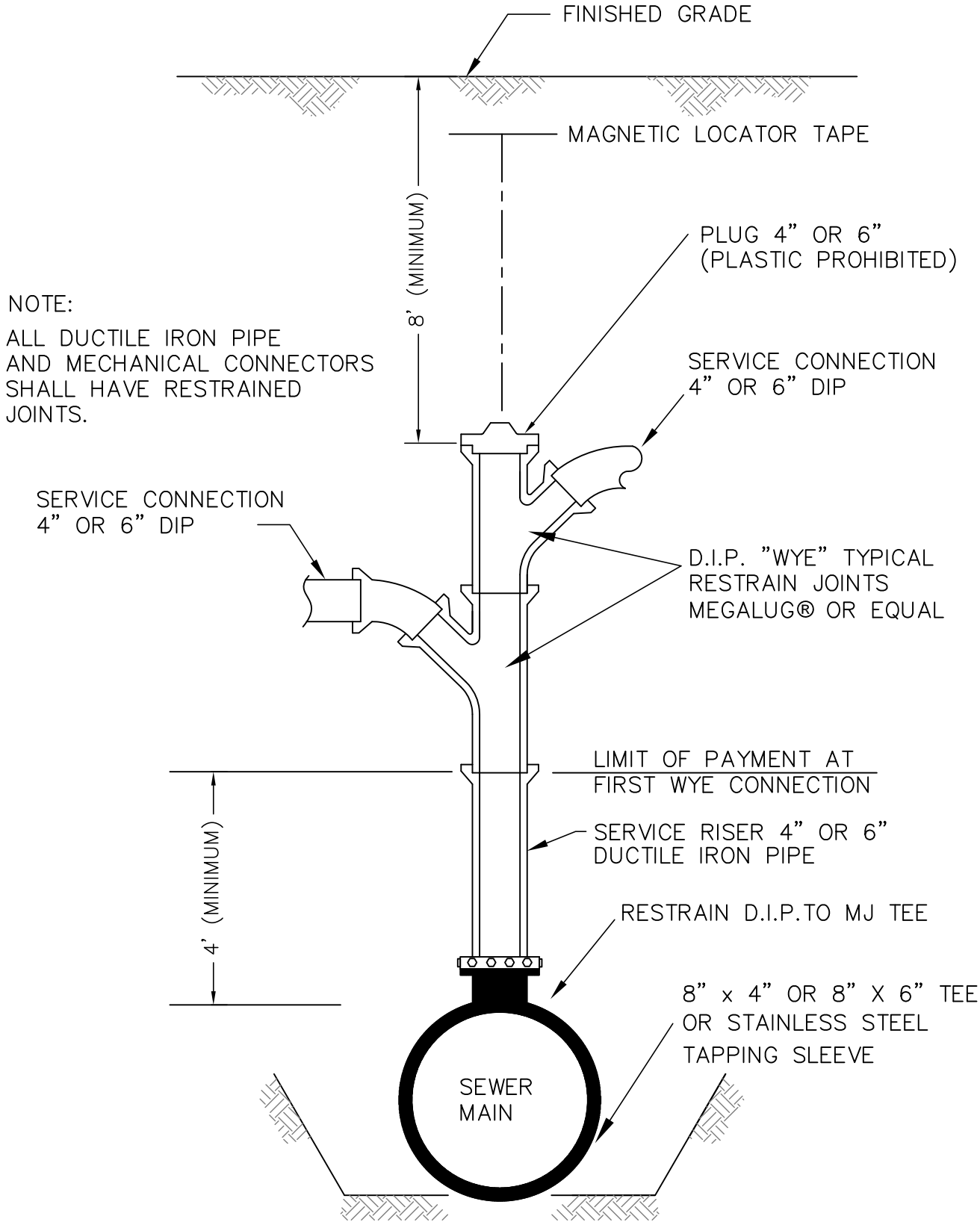

MUNICIPALITY OF ANCHORAGE	SCALE: NTS APPROVED: REVISED: 10/08	**NEW CONSTRUCTION OF SEWER LINES** **SERVICE RISER/TOP ENTRY** **FOR DEEP SEWER - DUCTILE IRON**	SECTION # 50.09 DETAIL # 50–15

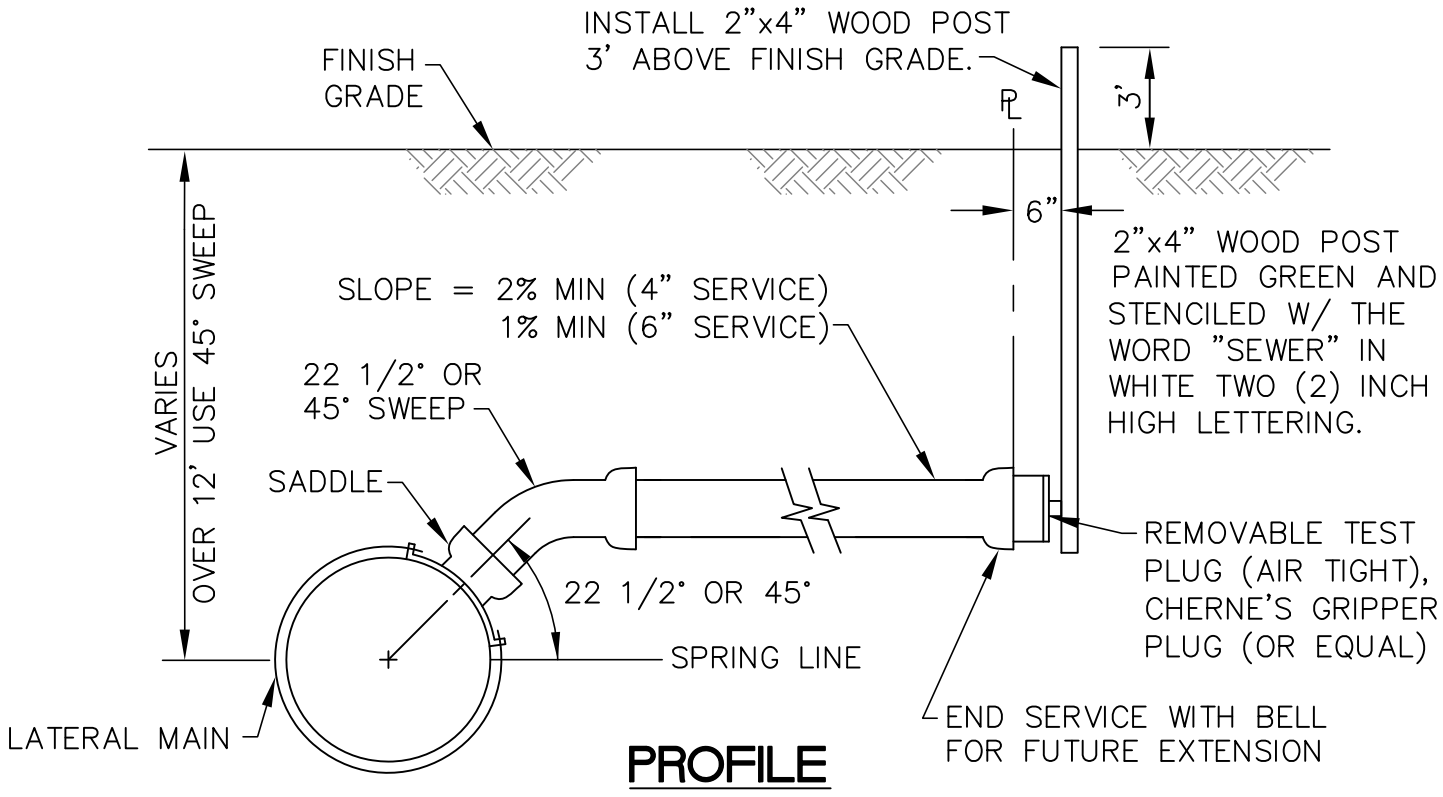

PROFILE

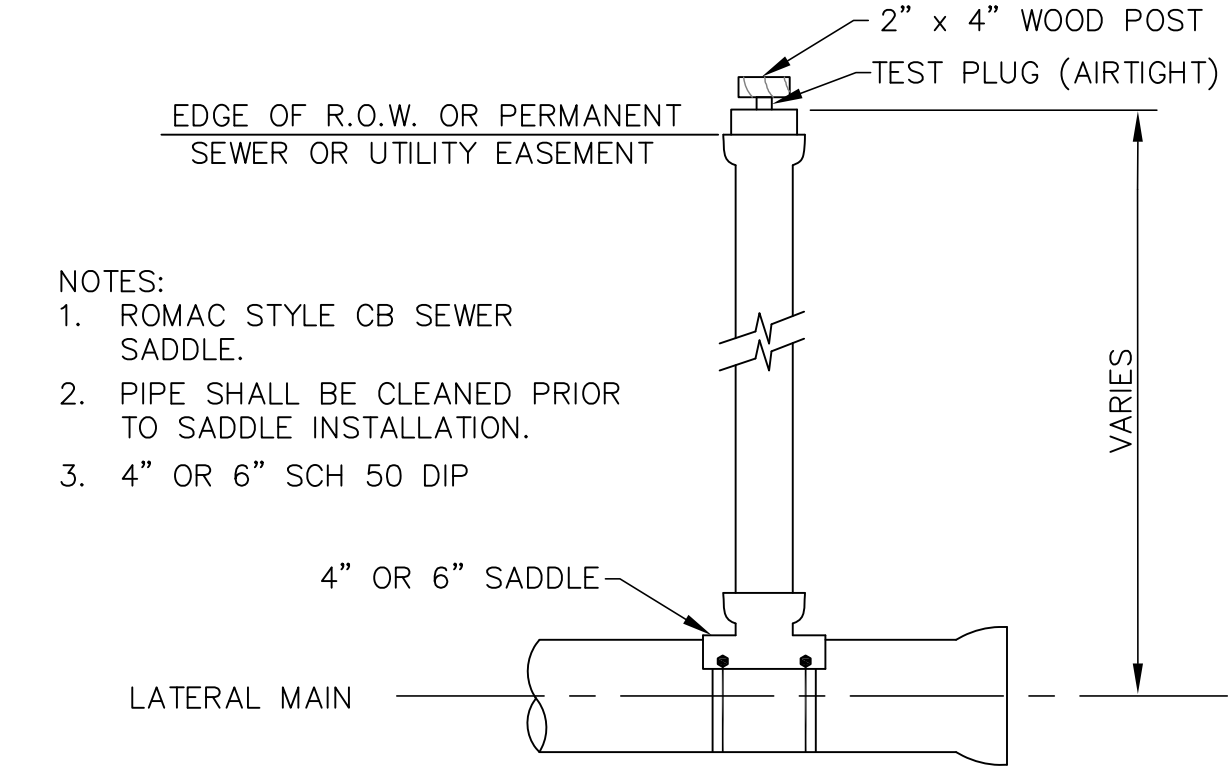

NOTES:
1. ROMAC STYLE CB SEWER SADDLE.
2. PIPE SHALL BE CLEANED PRIOR TO SADDLE INSTALLATION.
3. 4" OR 6" SCH 50 DIP

PLAN

MUNICIPALITY OF ANCHORAGE	SCALE: NTS APPROVED: REVISED: 2/12	**SANITARY SEWER SERVICE CONNECTION (R.O.W. ONLY)**	SECTION # 50.10 DETAIL # 50–16

REVISION: 12/09 MODIFIED TEST PLUG NOTE; ADDED MIN TO SLOPES. 2/12 ADDED DIST TO ℄, SWEEP, AND TEST PLUG INFO

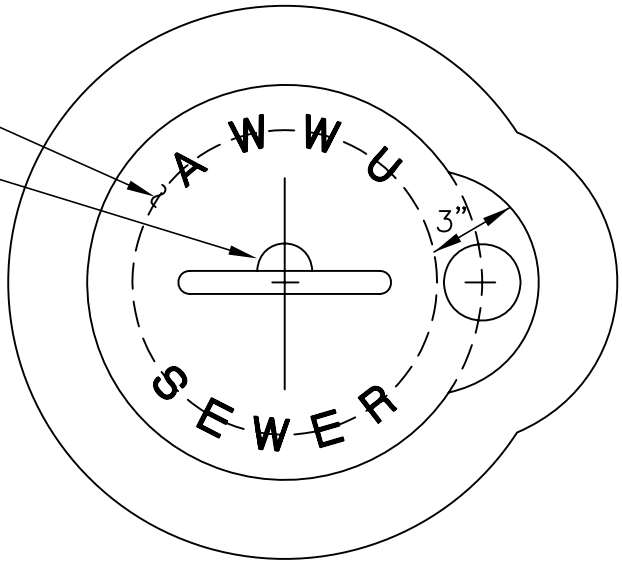

NOTES:

1. CAST CLEANOUT FRAME AND COVER, EJIW 3668 (OR EQUAL)
2. CASTING THICKNESS SUBJECT TO FOUNDRY REQUIREMENTS.
3. CASTING MUST BE SIZED TO FIT 8–INCH, D.I.P. CLASS 50 ONLY.
4. COVER SHALL BE 1/2" BELOW TOP OF PAVEMENT OR 6" BURY BELOW GRAVEL, DIRT OR R.A.P ROAD.

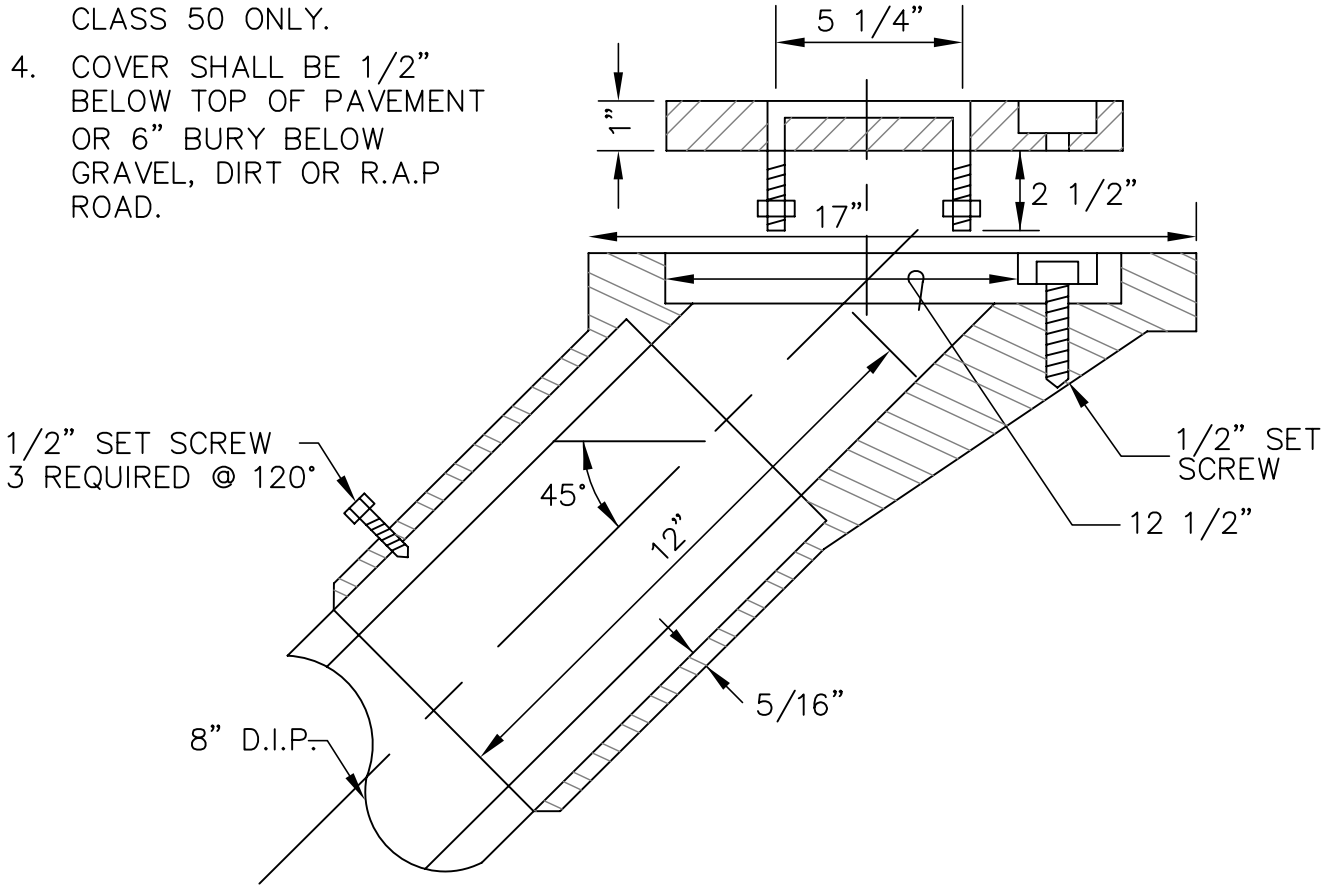

MUNICIPALITY OF ANCHORAGE	SCALE: NTS APPROVED: REVISED: 10/08	**SANITARY SEWER CLEANOUT COVER**	SECTION # 50.12 DETAIL # 50–17

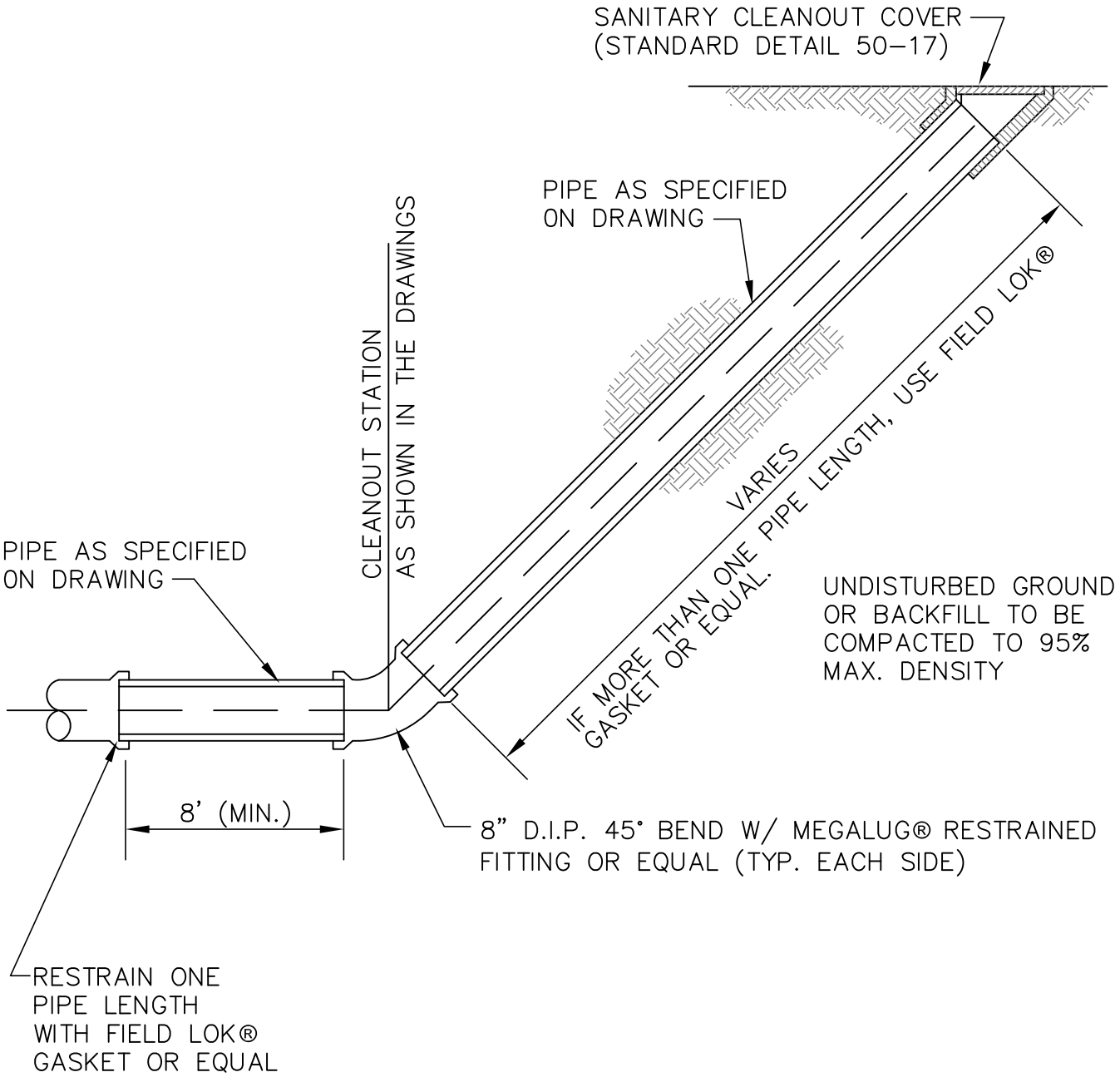

REVISION: 12/09 ADDED PIPE RESTRAINT INFORMATION 1/13 REMOVED PIPE SPECIFIC INFORMATION

MUNICIPALITY OF ANCHORAGE	SCALE: NTS APPROVED: REVISED: 1/13	**SANITARY CLEANOUT**	SECTION # 50.12 DETAIL # 50–18

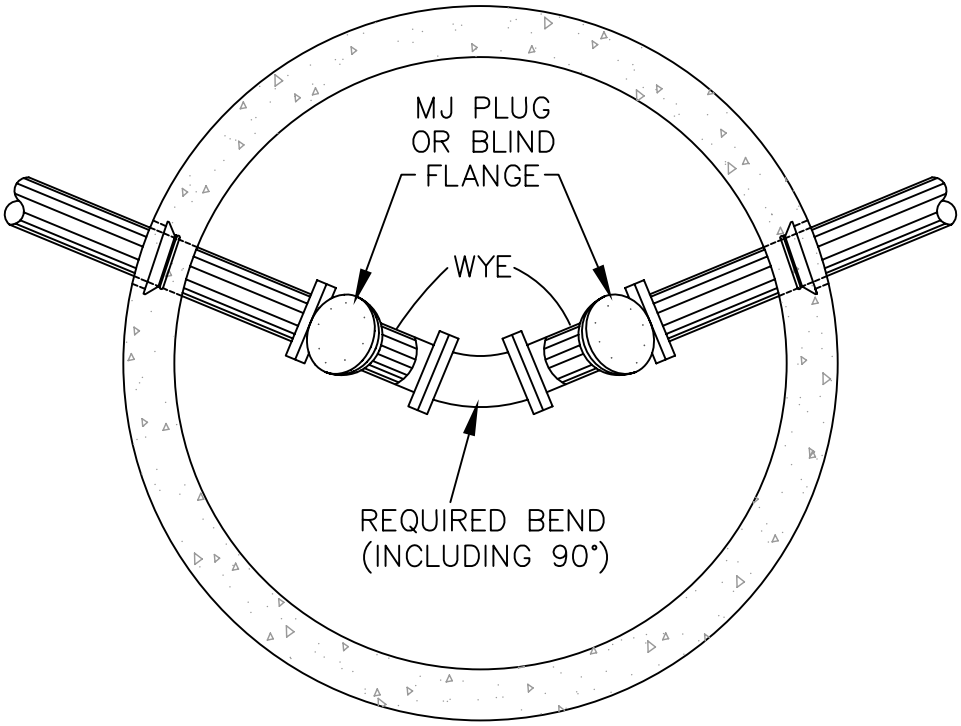

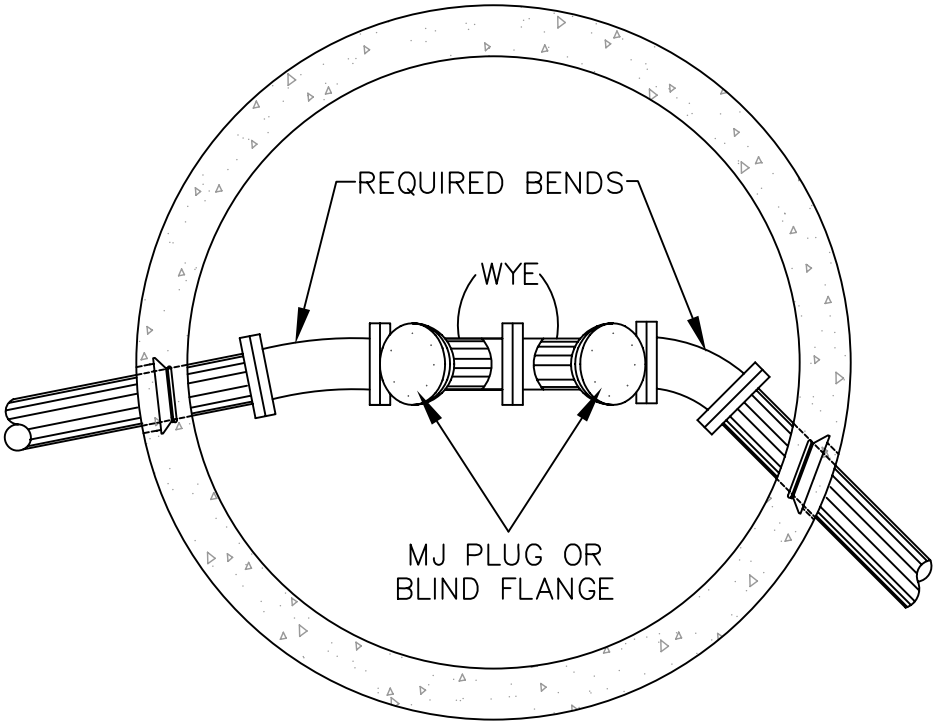

NOTES:

1. TYPE "B" MANHOLE (MINIMUM)
2. FITTINGS SHALL BE "SHORT BODY" AND RESTRAINED W/ MEGALUG® OR EQUAL.
3. INSTALL MASON SAND TO SPRING LINE (SEE DETAIL 50–21 OR 50–22).
4. MANHOLE LID & FRAME SHALL BE WATERTIGHT IN ACCORDANCE WITH DETAIL 50–10.

MUNICIPALITY OF ANCHORAGE	SCALE: NTS APPROVED: REVISED: 12/09	**SPECIAL MANHOLE AND CLEANOUT DETAIL** **(INSIDE PROTECTIVE WELL RADIUS)**	SECTION # DIV 50 DETAIL # 50–19

REVISION: 12/09 CHANGED MJ CAP TO MJ PLUG OR BLIND FLANGE

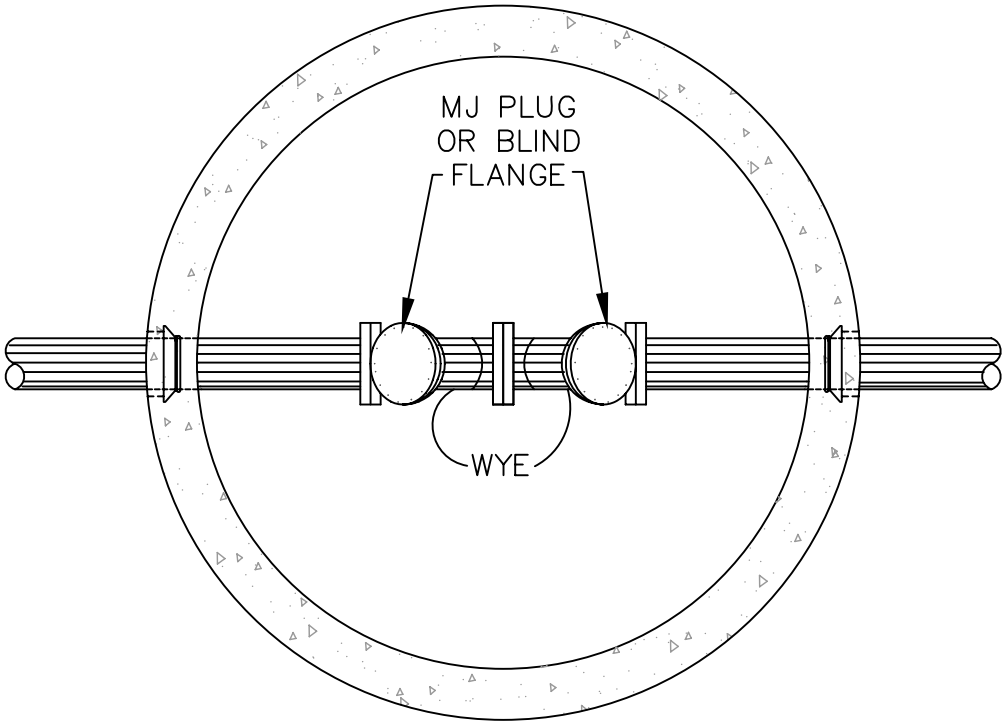

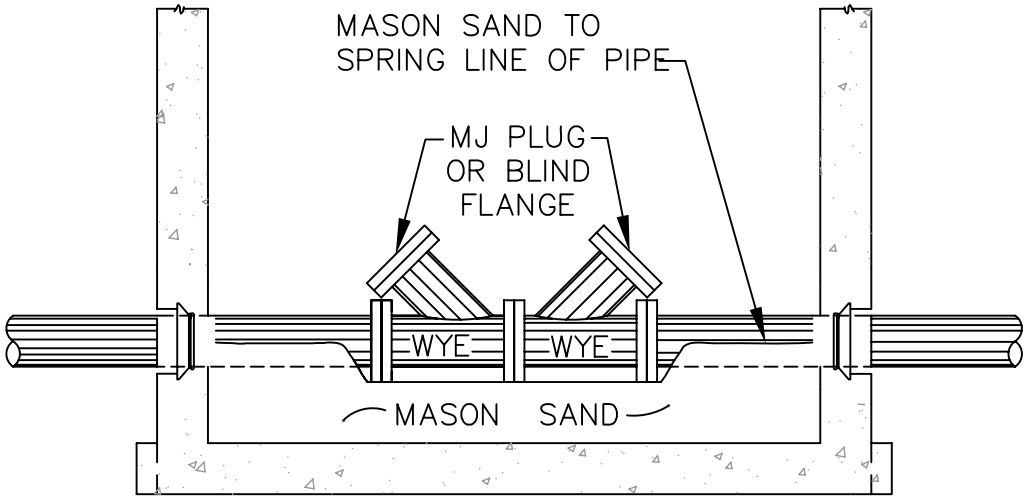

NOTES:

1. TYPE "B" MANHOLE (MINIMUM).
2. FITTINGS SHALL BE "SHORT BODY" AND RESTRAINED W/ MEGALUG® OR EQUAL.
3. INSTALL MASON SAND TO SPRING LINE OF PIPE.
4. MANHOLE LID & FRAME SHALL BE WATERTIGHT IN ACCORDANCE WITH DETAIL 50–10.

MUNICIPALITY OF ANCHORAGE	SCALE: NTS APPROVED: REVISED: 12/09	**SPECIAL MANHOLE AND CLEANOUT DETAIL** **(INSIDE PROTECTIVE WELL RADIUS)**	SECTION # DIV 50 DETAIL # 50–20

REVISION: 12/09 CHANGED MJ CAP TO MJ PLUG OR BLIND FLANGE

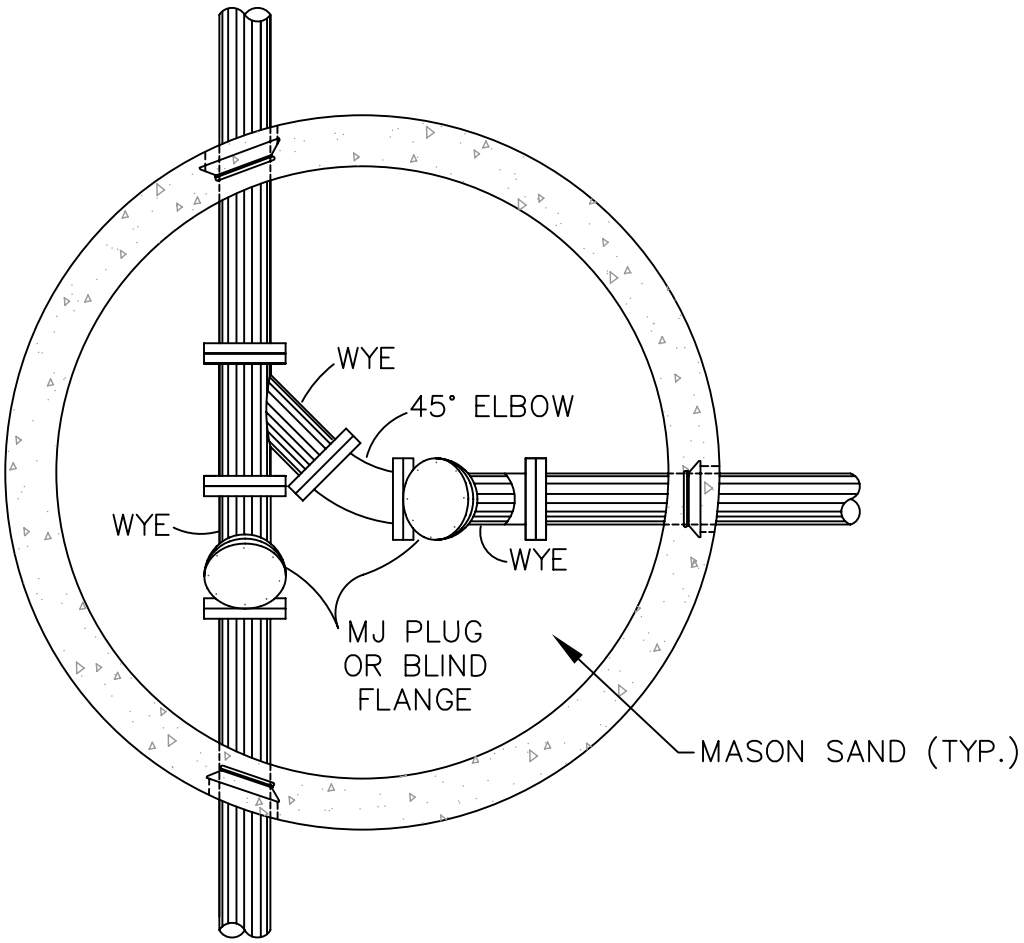

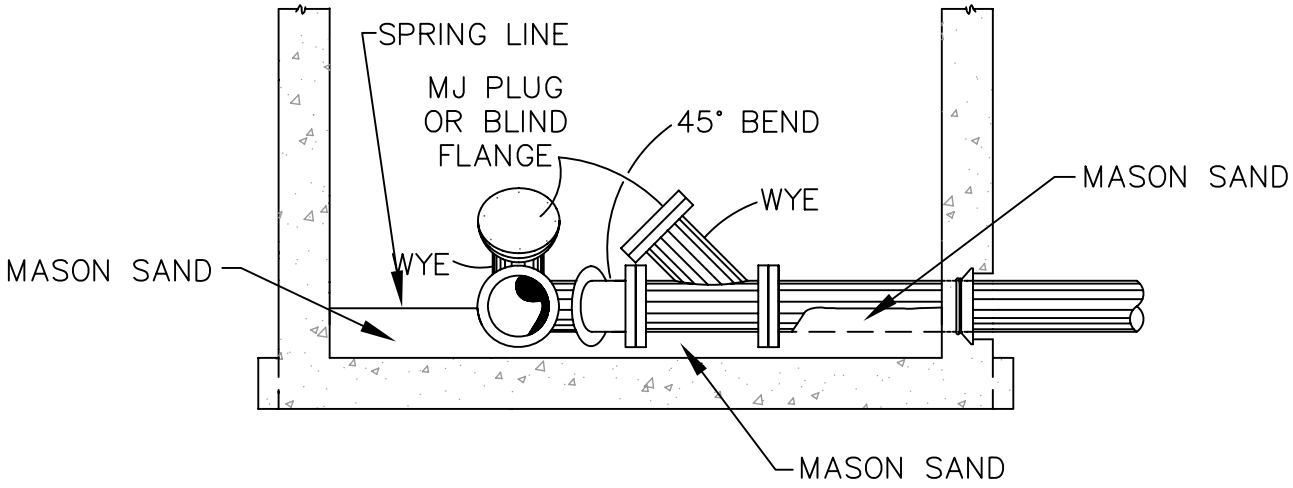

NOTES:

1. TYPE "B" MANHOLE (MINIMUM).
2. FITTINGS SHALL BE "SHORT BODY" AND RESTRAINED W/ MEGALUG® OR EQUAL.
3. INSTALL MASON SAND TO SPRING LINE OF PIPE.
4. MANHOLE LID AND FRAME SHALL BE WATERTIGHT IN ACCORDANCE WITH DETAIL 50–10.

MUNICIPALITY OF ANCHORAGE	SCALE: NTS APPROVED: REVISED: 12/09	**SPECIAL MANHOLE AND CLEANOUT DETAIL** **(INSIDE PROTECTIVE WELL RADIUS)**	SECTION # DIV 50 DETAIL # 50–21

REVISION: 12/09 CHANGED MJ CAP TO MJ PLUG OR BLIND FLANGE

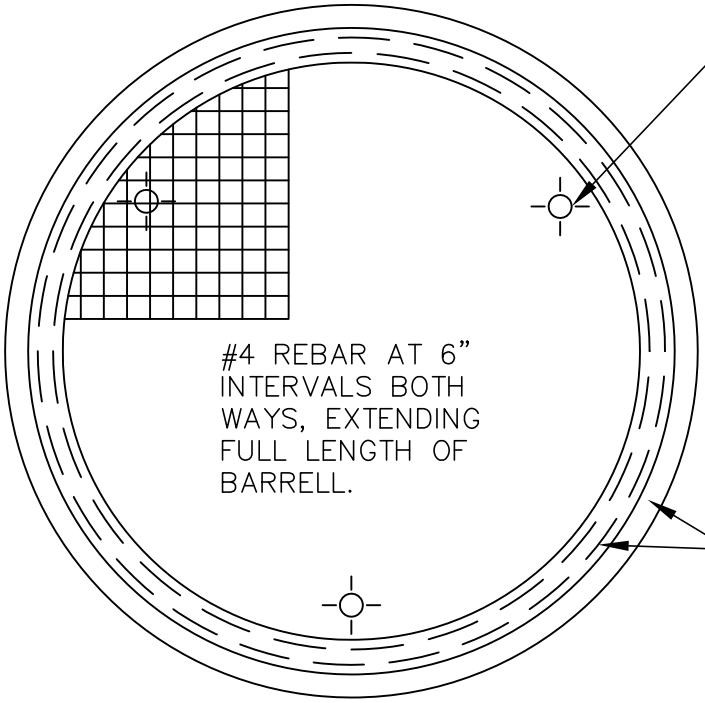

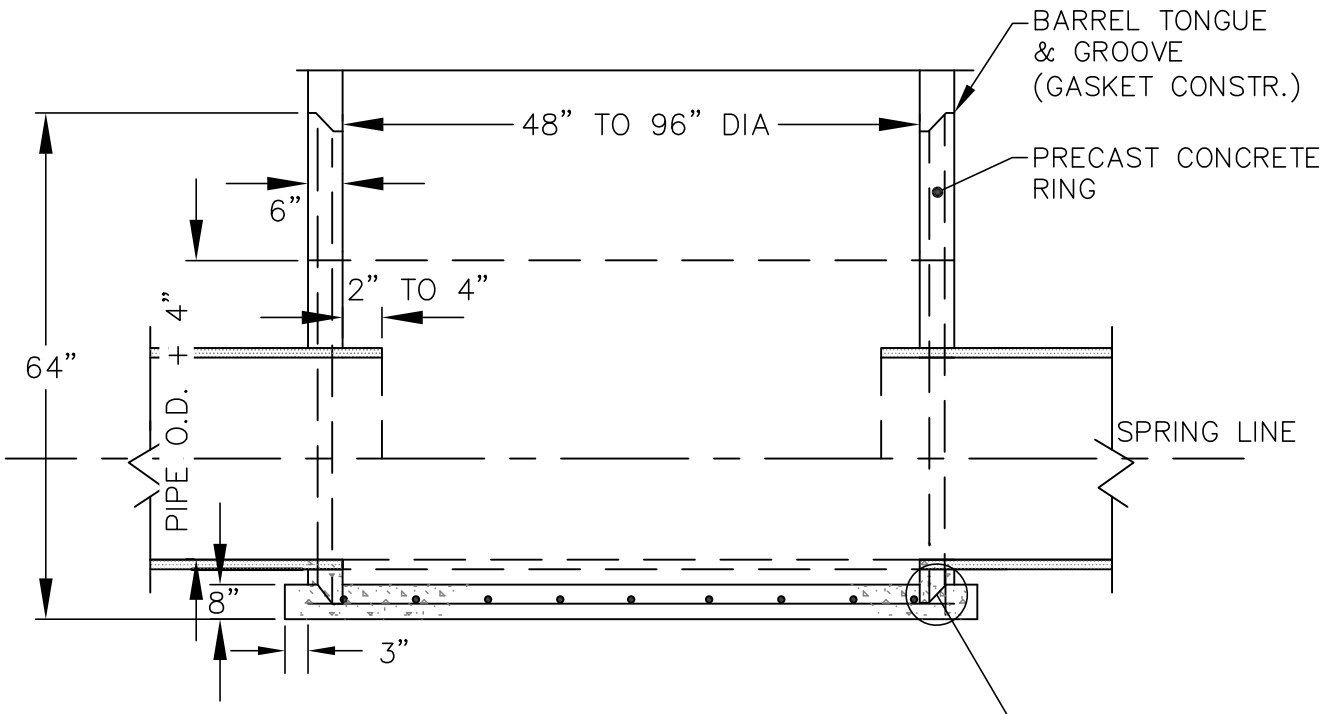

NOTES:

1. NO REBAR TO EXTEND INTO PIPE OPENING.
2. MORTAR PENETRATIONS

MUNICIPALITY OF ANCHORAGE	SCALE: NTS APPROVED: REVISED: 1/13	**HORSE SHOE SANITARY SEWER MANHOLE DETAIL**	SECTION # 50.03 DETAIL # 50–22

REVISION: 1/13 REDRAFTED

	(DIRECTION ON STREET) S. ON ARCTIC PROJECT NAME SIZE "DI CL-50 SEWER"				
STA	+	H.I.	–	T.B.M. EL.	INV. EL.
(23+36.98)	5.64	74.70		69.06	
24+52.18	SSMH ℄ #4				
24+53.88	N. INV.=	65.20			65.17
24+71.99	RT (24+58.2)	4" S/S L-9, B-2	8.80 / 65.90		65.24
24+90.13	LT (24+84)	4" S/S L-4, B-1	8.70 / 66.00		65.32
25+08.19	RT (24+87)	4" S/S L-8, B-2	8.70 / 66.00		65.39
25+25.90	RT (25+16.2)	4" S/S L-7, B-2	8.60 / 66.10		65.46
25+44.00	RT (25+40.2)	4" S/S L-6, B-2	8.50 / 66.20		65.53
25+62.10	RT (25+66.1)	4" S/S L-5, B-2	8.40 / 66.30		65.60
25+70.75	S. INV.=	65.67			65.64
24+72.45	SSMH ℄ #5				
(23+36.98)	5.38	74.44		69.06	
24+72.45	SSMH ℄ #5				
25+74.15	NW. INV.=	65.77			65.74
25+92.28	RT (25+78.4)	4" S/S L-4, B-2	7.99 / 66.45		65.81
26+10.38	RT (26+07)	4" S/S L-3, B-2	7.89 / 66.55		65.89
26+28.48	LT (26+14)	4" S/S L-3, B-1	7.84 / 66.60		65.96
26+46.58	RT (26+43.5)	4" S/S L-2, B-2	7.74 / 66.70		66.03
26+64.71	LT (26+49.6)	4" S/S L-2, B-1	7.69 / 66.75		66.10
26+77.85	8" 45 ℄ C.O.	INV.= 66.18			66.16
	RT (26+71.5)	4" S/S L-1, B-2	7.64 / 66.80		

CONSTRACTOR NAME LINE & GRADE PERSON NAME				PAGE# → ⑪ DAY & DATE	
ROD INV.	ROD T.O.P.	FOOTAGE	TIME/SET	SLOPE/DESCR.	
(15) SSMH#3					
		0.00			
9.53	8.78	1.70		S = +0.004/FT.	
9.46	8.71	18.11 19.81	8:00	+0.07/JNT	
9.38	8.63	18.14 37.95	8:20		
9.31	8.56	18.06 56.01	8:35	SERVICE TAP STA & DIR, SIZE, LOT, BLOCK MAY GO HERE OR AT THE LEFT	
9.24	8.49	17.71 73.72	8:55		
9.17	8.42	18.10 91.82	9:10		
9.10	8.35	18.10 109.92	9:20		
9.06	8.31	8.65 118.57	9:30		
		1.70 120.27	10:00		
(15) SSMH#3					
		0.00			
8.70	7.95	1.70		S = +0.004/FT.	
8.63	7.88	18.13 19.83	10:30	0.07/JNT	
8.55	7.80	18.10 37.93	10:45		
8.48	7.73	18.10 56.03	11:00		
8.41	7.66	18.10 74.13	11:15		
8.34	7.59	18.13 92.26	11:30		
8.28	7.53	13.14 105.40	12:00		
		105.40			

USE INVERT ELEVATIONS (INV) FOR SEWER
USE BOTTOM OF PIPE ELEVATIONS (BOP) FOR WATER

MUNICIPALITY OF ANCHORAGE

SCALE: NTS

APPROVED:

REVISED: 10/08

CONTRACTOR FIELD INSTALLATION NOTES SANITARY EXAMPLE

SECTION # DIV 50

DETAIL # 50-23

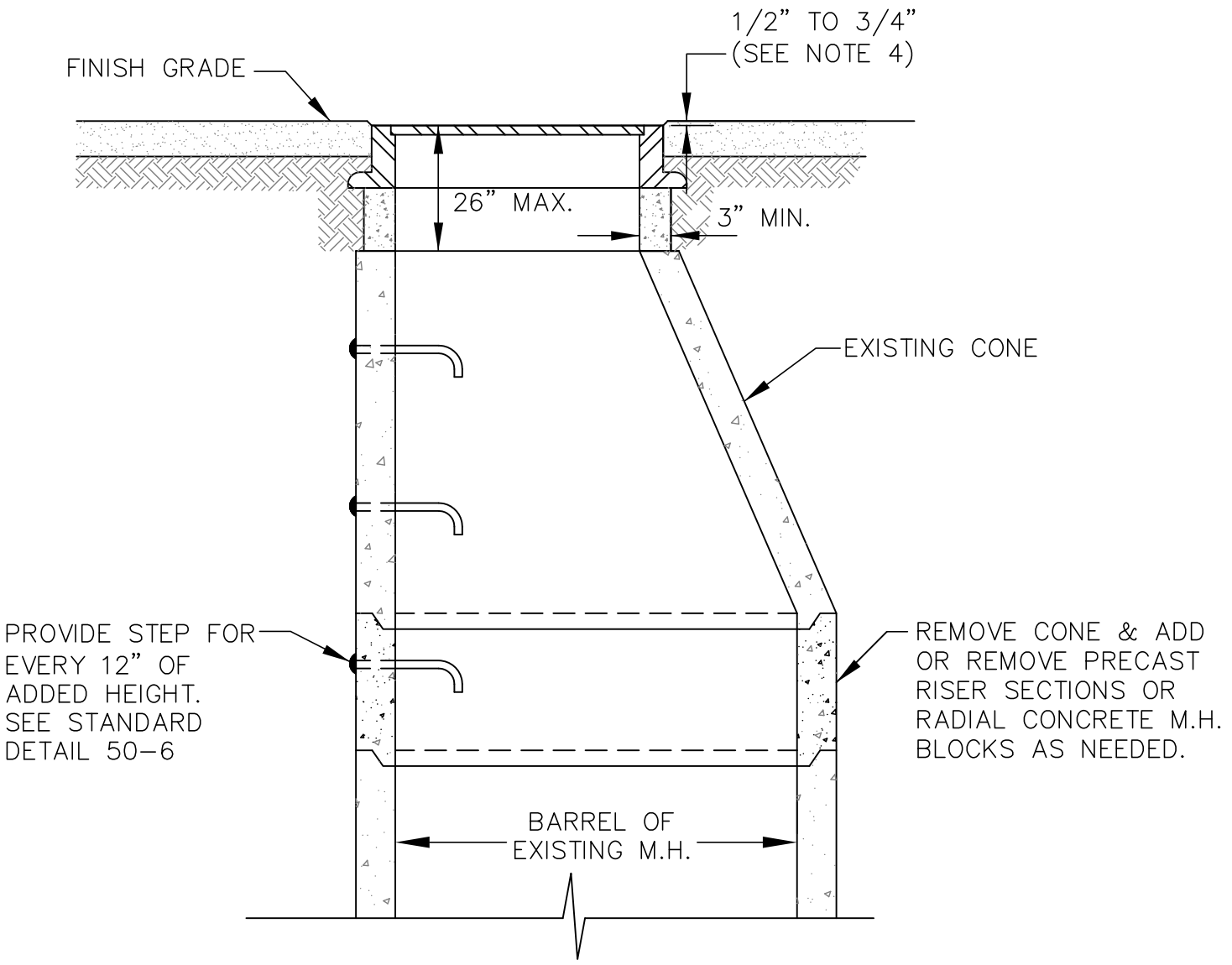

NOTES:

1. RESET CONCRETE GRADE RING IN FULL BED OF MORTAR.
2. REFER TO ASTM DESIGNATION C-478 FOR DESIGN AND STRENGTH REQUIREMENTS.
3. RESET CONE IN RAM-NEK OR EQUAL.
4. ADJUST FRAME TO A DEPTH OF 1/2" BELOW SURFACE OF PAVEMENT. FEATHER EDGE OF PAVEMENT TO SMOOTH TRANSITION.
5. SEAL JOINTS, FRAME, AND GRADE RINGS WITH WRAPID SEAL® OR APPROVED EQUAL.
6. WRAP CONES & BARREL SECTIONS WITH THREE (3) LAYERS OF 8-MIL THICK POLYETHYLENE ENCASEMENT MATERIAL AFTER INSTALLING WRAPIDSEAL®. (SEE DETAIL 50-1)

MUNICIPALITY OF ANCHORAGE	SCALE: NTS APPROVED: REVISED: 1/13	# MANHOLE CONE ADJUSTMENT	SECTION # 50.19 DETAIL # 50-24

REVISION: 3/12 ADDED NOTES 6 & 7 1/13 RENUMBERED NOTES & MODIFIED NOTE 6

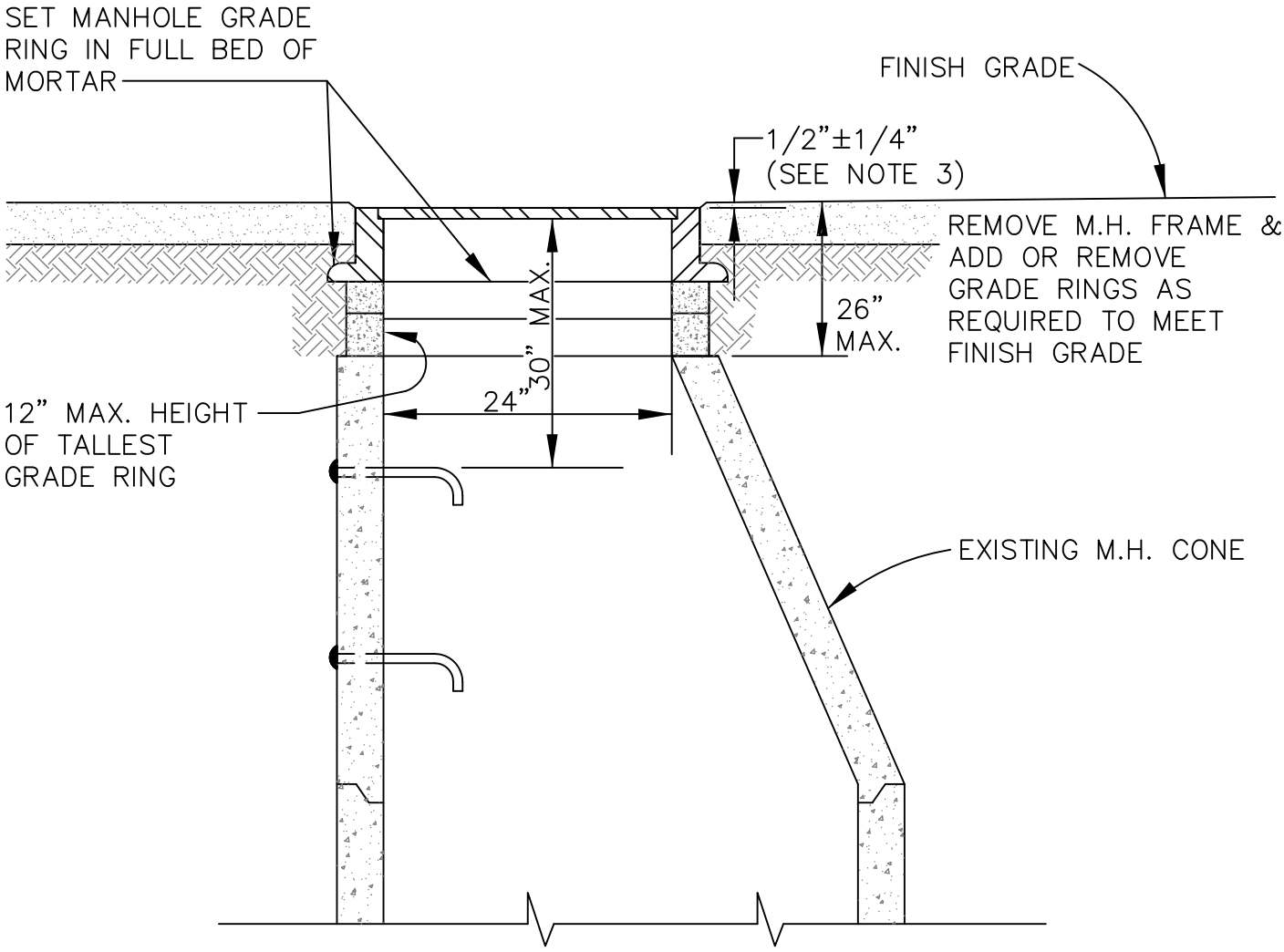

NOTES:

1. REFER TO ASTM DESIGNATION C-478 FOR DESIGN AND STRENGTH REQUIREMENTS.
2. WHEN AN ADJUSTMENT OF GREATER THAN 18" IN GRADE RINGS IS REQUIRED, ADJUST CONE I.A.W. STANDARD DETAIL 50-24 RATHER THAN GRADE RINGS.
3. IF NECESSARY, SHIM MANHOLE FRAME WITH STUD WASHERS, TO ADJUST FRAME TO A DEPTH OF 1/2" BELOW SURFACE OF PAVEMENT. FEATHER EDGE OF PAVEMENT TO SMOOTH TRANSITION. WHEN SHIMS ARE USED, SET MANHOLE FRAME IN A FULL BED OF MORTAR WITH SHIMS.
4. SEAL FRAME AND GRADE RINGS WITH WRAPID SEAL® OR APPROVED EQUAL.

REVISION: 3/12 ADDED NOTE 4

MUNICIPALITY OF ANCHORAGE	SCALE: NTS APPROVED: REVISED: 3/12	MANHOLE RING ADJUSTMENT	SECTION # 50.20 DETAIL # 50-25

MUNICIPALITY OF ANCHORAGE
STANDARD SPECIFICATIONS

DIVISION 55
STORM DRAIN SYSTEMS

STANDARD CONSTRUCTION SPECIFICATIONS
FOR STORM DRAIN SYSTEMS
DIVISION 55
INDEX

SECTION 55.01	GENERAL	1
Article 1.1	Scope of Work	1
Article 1.2	Applicable Standards	1
Article 1.3	Surveys	2
Article 1.4	Concrete and Mortar	2
Article 1.5	Payment - General	3
SECTION 55.02	FURNISH AND INSTALL PIPE	4
Article 2.1	General	4
Article 2.2	Material	4
Article 2.3	Construction	8
Article 2.4	Measurement	13
Article 2.5	Basis of Payment	13
SECTION 55.03	SUBDRAINS	14
Article 3.1	General	14
Article 3.2	Material	14
Article 3.3	Construction	14
Article 3.4	Measurement	14
Article 3.5	Basis of Payment	15
SECTION 55.04	CONNECTIONS TO EXISTING MANHOLES OR CATCH BASINS	16
Article 4.1	General	16
Article 4.2	Construction	16
Article 4.3	Measurement	16
Article 4.4	Basis of Payment	16
SECTION 55.05	MANHOLES AND CATCH BASIN MANHOLES	17
Article 5.1	General	17
Article 5.2	Material	17
Article 5.3	Construction	18
Article 5.4	Measurement	19
Article 5.5	Basis of Payment	20
SECTION 55.06	WATERTIGHT MANHOLE FRAMES AND COVER	21
Article 6.1	General	21
Article 6.2	Material	21
Article 6.3	Construction	21
Article 6.4	Measurement	21
Article 6.5	Basis of Payment	21

SECTION 55.07 ADJUST STORM DRAIN MANHOLE CONE TO FINISH GRADE 22
Article 7.1 General 22
Article 7.2 Material 22
Article 7.3 Construction 22
Article 7.4 Measurement 22
Article 7.5 Basis of Payment 23

SECTION 55.08 ADJUST STORM DRAIN MANHOLE RING TO FINISH GRADE 24
Article 8.1 General 24
Article 8.2 Material 24
Article 8.3 Construction 24
Article 8.4 Measurement 25
Article 8.5 Basis of Payment 25

SECTION 55.09 CONSTRUCT CATCH BASIN 26
Article 9.1 General 26
Article 9.2 Material 26
Article 9.3 Construction 26
Article 9.4 Measurement 26
Article 9.5 Basis of Payment 27

SECTION 55.10 RELOCATE CATCH BASIN OR CATCH BASIN MANHOLE 28
Article 10.1 General 28
Article 10.2 Material 28
Article 10.3 Construction 28
Article 10.4 Measurement 28
Article 10.5 Basis of Payment 28

SECTION 55.11 REMOVE MANHOLE OR CATCH BASIN 29
Article 11.1 General 29
Article 11.2 Construction 29
Article 11.3 Measurement 29
Article 11.4 Basis of Payment 29

SECTION 55.12 ADJUST CATCH BASIN TO FINISH GRADE 30
Article 12.1 General 30
Article 12.2 Material 30
Article 12.3 Construction 30
Article 12.4 Measurement 30
Article 12.5 Basis of Payment 30

SECTION 55.13 ABANDON CATCH BASIN LEAD 31
Article 13.1 General 31
Article 13.2 Materials 31
Article 13.3 Construction 31
Article 13.4 Measurement 31
Article 13.5 Basis of Payment 31

SECTION 55.14 CONSTRUCT STORM CLEANOUT 32
Article 14.1 General 32
Article 14.2 Material 32
Article 14.3 Measurement 32
Article 14.4 Basis of Payment 32

SECTION 55.15 ADJUST STORM CLEANOUT TO FINISH GRADE 33
Article 15.1 General 33
Article 15.2 Material 33
Article 15.3 Construction 33
Article 15.4 Measurement 33
Article 15.5 Basis of Payment 33

SECTION 55.16 CONSTRUCT DROP CONNECTION 34
Article 16.1 General 34
Article 16.2 Material 34
Article 16.3 Construction 34
Article 16.4 Measurement 34
Article 16.5 Basis of Payment 34

SECTION 55.17 FLUME DOWNDRAIN 35
Article 17.1 General 35
Article 17.2 Materials 35
Article 17.3 Construction 35
Article 17.4 Measurement 35
Article 17.5 Basis of Payment 35

SECTION 55.18 FOOTING DRAIN SERVICES 36
Article 18.1 General 36
Article 18.2 Material 36
Article 18.3 Construction 36
Article 18.4 Measurement 36
Article 18.5 Basis of Payment 36

SECTION 55.19 CONSTRUCT OPEN DITCH 37
Article 19.1 General 37
Article 19.2 Construction 37
Article 19.3 Measurement 37
Article 19.4 Basis of Payment 37

SECTION 55.20 CULVERT 38
Article 20.1 General 38
Article 20.2 Construction 38
Article 20.3 Measurement 38
Article 20.4 Basis of Payment 38

SECTION 55.21 FIN DRAIN 39
Article 21.1 General 39
Article 21.2 Materials 39
Article 21.3 Construction 39
Article 21.4 Measurement 40
Article 21.5 Basis of Payment 40

SECTION 55.22 OIL AND GRIT SEPARATOR 41
Article 22.1 General 41
Article 22.2 Description 41
Article 22.3 Materials 41
Article 22.4 Construction 41
Article 22.5 Measurement 42
Article 22.6 Basis of Payment 42

SECTION 55.23 HEAT TRACE SYSTEM 43
Article 23.1 General 43
Article 23.2 Regulations and Codes 43
Article 23.3 Equipment Lists and Drawings 43
Article 23.4 Warranties, Guarantees, and Inspection Sheets 43
Article 23.5 Safety Precautions 44
Article 23.6 Heat Cables 44
Article 23.7 Measurement 45
Article 23.8 Basis of Payment 45

STANDARD CONSTRUCTION SPECIFICATIONS
FOR STORM DRAIN SYSTEMS
DIVISION 55

SECTION 55.01 GENERAL

Article 1.1 Scope of Work

The Work covered by these Specifications consists of providing all plant, labor, equipment, supplies, transportation, handling, storage and performance of all operations necessary to complete the construction for the pipe laying, jointing, and testing of storm drain systems and culverts.

Requirements for earthwork including trench excavation and backfill are specified in Division 20 - Earthwork.

Article 1.2 Applicable Standards

The latest revision of the following standards of the American Society for Testing and Materials (ASTM), the American Association for State Highway and Transportation Officials (AASHTO), and the American Water Works Association (AWWA) are hereby made part of this Specification.

ASTM A-48	Standard Specifications for Gray Iron Castings
ASTM C-76	Specification for Reinforced Concrete
ASTM C-150	Specification for Portland Cement
ASTM C-478 (AASHTO-199)	Specification for Precast Reinforced Concrete Manhole Sections
ASTM C-990	Standard Specification for Joins for Concrete Pipe, Manholes, and Precast Box Sections Using Preformed Flexible Joint Sealants
ASTM D 1248	Polyethylene Plastics Molding and Extrusion Materials, Type III, High Density
ASTM D 3035	Polyethylene Plastic Pipe (SDR-PR) Based on Controlled Outside Diameter
ASTM D 3350	Polyethylene Plastics and Fittings Materials
AASHTO M-36	Corrugated Steel Pipe & Fittings
AASHTO M-45	Sand for Cement Mortar
AASHTO M-105	Gray Iron Castings
AASHTO M-190	Bituminous Coating of CMP
AASHTO M-196	Corrugated Aluminum Pipe & Fittings

AASHTO M-198	Joints for Concrete Pipe, Manholes, and Precast Box Sections Using Preformed Flexible Joint Sealants
AASHTO M-245	Precoated Galvanized Steel Culverts and Underdrains
AASHTO M-246	Precoated Galvanized Steel Sheets for Culverts and Underdrains
AASHTO M-274	Corrugated Aluminized Pipe and Fittings
AASHTO M-252	Corrugated Polyethylene Pipe 3"-10" diameter
AASHTO M-294	Corrugated Polyethylene Pipe, 12" diameter and larger
AASHTO M-306	Drainage, Sewer, Utility, and Related Castings
Federal Specification SS-S-210	Sealing Compound, Preformed Plastic, for Expansion Joints and Pipe Joints

Article 1.3 Surveys

The Contractor shall layout in the field the alignment and grade of Work to be done under the Contract. The Contractor shall be responsible for the preservation of all line stakes, grade stakes, and hubs. In the event of their loss or destruction, the Contractor shall be responsible for their proper replacement. The line and grade for pipe lines shall be given from reference hubs offset from each manhole or cleanout. The Contractor shall be responsible for the transfer of the control points from the reference hubs to such hubs or batter boards as he may desire or need for the prosecution of the Work.

A Professional Land Surveyor licensed in the State of Alaska, subcontracted to the Contractor, shall perform all surveying, project control, monumentation, staking, profiles, and cross section measurements for pay item quantities. All personnel involved in measuring and recording survey data shall be directly employed by the Surveying Subcontractor and shall not be employed by the Contractor or any of the other Subcontractors for the duration of the Project. Failure to adhere to this requirement will result in non-payment for all Work affected by non-compliance. All survey work will adhere to Division 65 – Construction Survey.

Article 1.4 Concrete and Mortar

A. Miscellaneous Concrete

All concrete used in the construction of storm drains with the exception of precast manholes, manhole risers, cones, and catch basin barrels shall be Class A-3. Concrete Work shall conform to Division 30 – Portland Cement Concrete.

B. Mortar

Cement for mortar used in the construction of storm drain shall conform with the requirements of ASTM C-150, Type II. Sand shall conform with the requirements of AASHTO M-45. The mortar shall be composed of one (1) part cement and three (3) parts sand. The addition of lime is not permitted.

Article 1.5 Payment - General

Payment for all Work included in this Division shall be in accordance with Division 10, Section 10.07 - Measurement and Payment and shall include full payment for all Work described.

SECTION 55.02 FURNISH AND INSTALL PIPE

Article 2.1 General

The Work under this Section consists of the performance of all operations pertaining to furnishing and installing pipe for storm drain systems.

In the case of Owner-furnished pipe, the Owner shall allot to the Project pipe to accomplish the Work in amounts, exactly matching the Contractor's pay quantities for pipe. Any surplus pipe left over from this allotment at the end of the Project shall be returned from the Contractor's job sites to the Owner's designated pipe yard. If the Contractor withdraws from the Owner's pipe yard more than the amount required to match the payment quantities, the Contractor shall pay the Owner on the basis of the Owner's invoice price for pipe (including freight), plus ten percent (10%) overhead to reimburse the Owner for handling, warehousing, inspection, and administration.

Article 2.2 Material

A. General

All piping shall be in accordance with the Contract Documents conforming to the size and class shown and specified. Changes in class shall be made within one-half of a pipe length of the station indicated on the Drawings.

B. Corrugated Metal Pipe (CMP)

Corrugated metal pipe shall only be used in culvert crossings and similar applications. CMP use in a piped storm drain system is prohibited without approval from Street Maintenance and the Municipal Engineer. Corrugated metal pipe is intended to refer to both steel and aluminum. The pipe shall conform to the following specifications:

1. **Steel:** Corrugated steel pipe shall meet the requirements of AASHTO M-36.

2. **Aluminum:** Corrugated aluminum pipe shall conform to the requirements of the AASHTO M-196.

3. **Aluminum Coated (Aluminized):** Corrugated aluminized pipe shall conform to the requirements of AASHTO M-36 and AASHTO M-274.

All CMP fittings shall be fabricated in a workmanlike manner, develop the full strength of the material being joined, and finished to conform to the appropriate requirements of AASHTO M-36, AASHTO M-196 and AASHTO M-274.

Corrugated steel and aluminum pipe shall jointed by using coupling bands applied as recommended by the manufacturer and approved by the Engineer.

Dissimilar metals may only be used in extending in place metal CMP and reattachment of dissimilar metal end sections provided an electrical insulating material, at least one-sixteenth inch (1/16”) in thickness, is used to separate the dissimilar materials.

All angles, bolts, and nuts shall be as recommended by the manufacturer for the type of pipe used and as approved by the Engineer.

The metal gauge for pipe to be used shall be in accordance with the Contract Documents.

If bituminous coating of CMP is required, the bituminous coating shall conform to the requirements of AASHTO M-190.

All welding performed by the Contractor on aluminum pipe shall incorporate the use of 4043 or 5356 alloy for welding wire. The welding shall be accomplished by either the "TIG" (tungsten, inert gas shielded) or "MIG" (metal arc welding, inert gas shielded) process.

End Section for Corrugated Metal Pipe - Galvanized steel and aluminum end sections shall be flared, beveled, shop-assembled units to serve as structural, hydraulic and esthetic treatment to corrugated metal pipe culverts. They may be attached to culverts by threaded bolts, by riveting or bolting in accordance with the manufacturer's standard procedure. End sections shall have a turned-down lip or toe plate at the wide end to act as a cutoff. Materials for steel end sections shall be galvanized steel conforming to the requirements of AASHTO M-36. The gauge shall be as follows:

16 Ga.	Through 24" in diameter or 29" X 18" pipe-arch
14 Ga.	30" in diameter and 36" X 22" pipe-arch 36" in diameter and 43" X 27" pipe-arch
12 Ga.	Over 36" in diameter and 43" X 27" pipe-arch (except that the center panels of 60" in diameter and larger and 72" x 44" pipe-arch and larger, shall be 10 Ga.)

Galvanized stiffener angles shall supplement the usual reinforced side edges for sixty inches (60") in diameter and larger, seventy-nine by forty-nine inch (79" x 49") pipe-arch and larger.

If the end section is shop attached to a stub of pipe, the pipe stub shall not be lighter in gauge than the end section.

Materials for aluminum end sections shall comply with the provisions of AASHTO M-196 and fabrication shall comply with the requirements above.

C. Precoated Corrugated Metal Pipe (PCMP)

All precoated corrugated metal pipe and connecting bands shall be coated to meet the AASHTO DESIGNATION: M-245 and M-246 and the coating shall be 10 mils minimum thickness each side. All exposed edges including any perforated hole edges shall be coated with a liquid coating supplied by the supplier of the precoated corrugated pipe. All metal utilized for the precoated metal pipe shall conform to SubArticle 2.2.B - Corrugated Metal Pipe. All metal pipe utilized shall have a nominal wall thickness of 16 gauge for pipes twenty-one inches (21") and larger and 18 gauge for pipes eighteen inches (18") and smaller, unless otherwise noted.

D. Corrugated Polyethylene Pipe (CPEP)

Corrugated Polyethylene pipe shall conform to the following specifications:

1. Three inch through ten inch (3" through 10") diameters: the requirements of AASHTO M-252.

2. Twelve inch (12") and larger diameters: the requirements of AASHTO M-294.

   The corrugated Polyethylene Pipe covered by these specifications is classified as follows:

   Type C - This pipe shall have a full circular cross-section with a corrugated surface both inside and outside. Corrugations may be either annular or helical.

   Type S - This pipe shall have a full circular cross-section, with an outer corrugated pipe wall and a smooth inner liner. Corrugations may be either annular or helical.

   Type CP - This pipe shall be Type C with Class 2 perforations.

   Type SP - This pipe shall be Type S with Class 2 perforations.

All CPEP fittings shall be rotational or blow molded and shall conform to the fitting requirements of AASHTO M-252 or M-294.

Contractor shall join CPEP segments per the manufacturer's recommendations. When a bell and spigot joint is utilized, the Contractor shall ensure that the rubber gasket is correctly inserted into the joint and that the bell is on the upstream end of the pipe.

For connections not using manufactured couplings, the Contractor shall join three inch to ten inch (3" - 10") CPEP with couplings corrugated to match the pipe corrugations or with push-on couplings with locking devices. Contractor shall join twelve inch (12") and larger CPEP with couplings, corrugated to match the index in the pipe corrugations and in a width not less than three-quarters (3/4) of the nominal pipe diameter. All couplings shall be manufactured to lap equally to a

distance on each jointed pipe, to no less than the diameter of the pipe and shall provide a positive means of closure.

All flared end sections and saddles shall be constructed of the same material as the pipe and shall be factory assembled units to serve as structural, hydraulic, and/or aesthetic end treatment to CPEP culverts. CPEP connections shall be as recommended by the manufacturer. The cost of the end section and saddles shall be incidental to the pipe.

CPEP may be connected to CMP or may be used between or connected to dissimilar metals. When CPEP is used as a connection, the Contractor shall construct the connection utilizing a joint specifically manufactured for that type of connection or shall construct the connection in accordance with Standard Detail 55-1.

Contractor shall not insert any portion of the bell of CPEP pipe into any manhole, catch basin, or catch basin manhole unless that portion will be completely removed when the pipe is trimmed to two inches (2") inside the manhole in accordance with Article 5.3, SubArticle B – Storm Drain Manholes and Catch Basin Manholes.

E. High Density Polyethylene Pipe (HDPEP)

High density polyethylene pipe shall conform to the following specifications:

The polyethylene resin shall be classified by ASTM D-1248 as Type III, Class C, Category 5, Grade P34, and have a minimum ASTM D-3350 cell classification of 335434C and a designation of PE 3408 by the Plastic Pipe Institute.

The polyethylene compound shall be suitably protected against ultraviolet light degradation by means of a two percent (2%) concentration of carbon black, well dispersed by pre-compounding in with the resin (by the resin manufacturer).

The pipe shall contain no recycled compound except that generated in the manufacturer's own plant from resin of the same specification from the same raw material supplier. The pipe shall be homogeneous throughout and free of visible cracks, holes, foreign inclusions, or other deleterious defects, and shall be identical in color, density, melt index, and other physical properties.

The pipe shall be designed according to the ISO modified formula in ASTM D-3035. The design pressure rating shall be expressed in terms of the static working pressure in psi for water at 73.4°F according to ASTM D-2837. The minimum allowable pressure rating for gravity pipe shall be 52 psi.

Join pipe lengths to one another using thermal butt fusion. Butt fusion of pipes shall be performed in accordance with the pipe manufacturer's recommendations for equipment and technique, using the correct size equipment and technique. Butt fusion will be performed only by personnel certified as competent by the polyethylene material supplier.

The Contractor shall provide butt fusion equipment compatible with the piping system being used as necessary to complete all joints on the project. All costs in connection with this equipment shall be included in the price bid for pipe installation.

Provide wall pipes or wall fitting as recommended by the pipe manufacturer to connect storm drain and catch basin drain pipes to manholes and catch basins.

Installation of all components shall be accomplished using the manufacturer's recommendations. Unless the Contractor's personnel are certified in the installation of polyethylene pipe, the pipe suppliers shall provide pipe personnel to instruct the Contractor in the handling, installation, and testing of their products. The Contractor shall provide one supplier's representative at the start of construction for on-site services. Additional technical representative services, if necessary, shall also be at the Contractor's expense.

Random tests of field joints will be made by the Engineer, as necessary, as a quality control measure. The Contractor shall be responsible for removal or repair of unsatisfactory butt fusion joints.

E. Polypropylene Pipe (PP)

Polypropylene pipe shall conform to the following specifications:

The pipe shall meet AASHTO MP-21. All pipe and fitting joints shall be watertight per ASTM-D3212.

Article 2.3 Construction

A. Excavation and Backfill

Excavation and backfill for furnishing and installing pipe shall be in accordance with Division 20, Section 20.13 - Trench Excavation and Backfill.

B. Pipe Grade and Alignment

Variance of individual pipe sections from established line and grade shall not be greater than those listed in the table below, providing that such variance does not result in a level or reverse sloping invert.

Allowance Diameter (Inches)	Tolerance (Feet)
8	0.03
10	0.03
12	0.03
14	0.04
16	0.04
18*	0.05

*Note: For all pipe sizes over eighteen inches (18") in diameter, tolerance not to exceed five-hundredths feet (0.05’).

During the progress of the Work, the Contractor shall provide instruments such as transits, levels, laser devices, and other facilities for transferring grades from offset hubs or for setting of batter boards or other construction guides from the control

points and bench marks provided by the Contractor. The Contractor shall provide qualified personnel to use such instruments and who shall have the duty and responsibility for placing and maintaining such construction guides. The Contractor shall notify the Engineer forty-eight (48) hours prior to taking measurements on newly installed section of line and/or appurtenances for Record Documents.

If the method of transferring grades from the offset hubs to the pipe require batter-boards, they shall be at least one by six inches (1" x 6") supported on two by four inch (2" x 4") stakes or approved metal rods and shall be placed every twenty-five feet (25'). At least three boards must be in place at any given time to facilitate checking of line and grade. Both line and grade shall be checked for each piece of pipe laid, except at tunnels where methods acceptable to the Engineer shall be used to carry forward line and grade.

The practice of pushing in uncompacted backfill over a section of pipe to provide a platform for transit and level alignment and grade observations shall be subject to the approval of the Engineer. If intermittent backfilling is allowed backfilling shall be accomplished in accordance with Division 20, Section 20.13 - Trench Excavation and Backfill.

Due to the flexibility of the CPEP, the Contractor shall exert due care while placing bedding and/or filter material and compacting adjacent to and over the pipe. All placement bedding and/or filter material and compaction shall be per the manufacturer's recommendations.

The Contractor shall exert due care in handling the precoated corrugated metal pipe or while placing bedding and/or filter material around the pipe so as not to damage the coating. The Contractor shall obtain a liquid coating supplied by the precoated corrugated metal supplier which will be painted over scratched or cut sections of the pipe.

C. Pipe Laying

CMP and PCMP pipe shall be laid in Class C Bedding and CPEP and HDPEP pipe shall be laid in Class D Bedding unless otherwise required by the Contract Documents or directed by the Engineer.

Pipe laying shall in all cases proceed upgrade. Each pipe shall be laid true to line and grade and in such a manner as to form a close concentric joint with the adjoining pipe. The alignment of the installed pipe shall appear straight to visual observations and shall be such that a full circle of light can be seen between manholes, etc., when sighting along all points of the pipe circumference. Each section of pipe shall be handled carefully and placed accurately. Each section of pipe shall be properly supported to ensure true alignment and an invert which is smooth and free from roughness or irregularity. On helical pipe, the laps shall not impede the flow and all seams shall be aligned uniformly for the length of the run. At all times, when Work is not in progress, open ends of pipe and fittings shall be securely and satisfactorily closed so that no undesirable substances shall enter the pipe or fittings. All pipe shall be laid in accordance with the respective manufacturer's recommendations. Pipe shall not be laid when the bottom of the ditch or the sides to one foot (1') above the pipe are frozen. Backfill containing

frozen material shall not be placed, nor shall the trench be left open during freezing weather so that the temperature of the material near the pipe goes below freezing.

D. Low Pressure Air Test

Where watertight pipe is specified on the Drawings, the Contractor must perform a Low Pressure Air Test on specified plastic pipes in accordance with ASTM F1417.

E. Televising Storm Drains.

New storm drains twelve inch (12") in diameter to thirty-six inch (36") in diameter shall be inspected by closed circuit television (CCTV) after completion of trench backfill and finished grading but prior to the placement of pavement or permanent trench resurfacing, to determine the existence and extent of any obstructions, structural deficiencies, or sags. Storm drains less than fifty feet (50') in length for a single run are not required to be televised.

The Contractor shall do the televising. The Engineer reserves the right to retelevise any new storm drain work after the placement of pavement or permanent trench resurfacing, but before acceptance by the Engineer, to determine the existence and extent of any foreign material or obstructions such as, but not necessarily limited to, cement grout, wood, rocks, sand, concrete, or pieces of pipe, and any structural deficiencies or sags precipitated by the permanent resurfacing operations or other Contract Work. The Contractor shall notify the Engineer five (5) working days in advance of the anticipated date of the televising.

Five (5) working days shall be allowed for the Engineer to review each individual video recording of each and every storm drain documented on that particular recording. In the event that any deficiencies or sags are discovered by the Engineer, either by the Contractor's televising or the Engineer's retelevising, three (3) working days shall be allowed for the Engineer to determine whether the deficiencies or sags are repairable in place. If the Engineer determines that the deficiencies or sags are not repairable in place, the affected portion(s) shall be reconstructed in accordance with these Specifications.

The Contractor shall not be entitled to any additional working days due to delays resulting from the correction of any deficiencies or sags, either repairable or non-repairable in place, as determined by televised inspections and the Engineer.

1. General Requirements

   a. The video operator must have at least one (1) year of experience with a project of a similar nature.

   b. Video shall be submitted to the Municipality on DVDs with high quality color in a format reviewable by the Municipality.

   c. Video recordings that are out of focus shall be cause for rejection of the recordings and Contractor shall re-televise at no additional cost to the Owner.

d. The Contractor shall notify the Engineer five (5) Municipal working days prior to televising.

e. The Contractor shall turn over the original video recordings to the Engineer immediately after recording.

f. Televising shall be done in one direction for the entire length between manholes; each section shall be isolated from the remainder of the storm drain as required. Sufficient water shall be supplied to cause drainage within the isolated section prior to televising.

g. Pipe must be clean and free of dirt, rock, gravel, debris, or any other material or obstruction that will hinder the CCTV inspection.

h. When CCTV inspection is used to check for sag, a calibrated readable device acceptable to the Engineer shall be used to measure the depth of sag.

i. The Contractor shall not be entitled to any additional working days due to delays in securing the CCTV services of a private vendor.

2. Equipment for Televising

Televising equipment shall include the television camera, television monitor, cables, power source, lights and other equipment necessary to the televising operation. The camera shall be specifically designed and constructed for operation in connection with storm drain inspection. The camera shall be self-operative in one hundred percent (100%) humidity conditions. Focal distance shall be adjustable through a range of from one inch (1") to infinity. The camera shall be self propelled or mounted on skids suitably sized for each pipe diameter to be investigated. Lighting for the camera shall minimize reflective glare. Camera and lighting quality shall be suitable to provide a clear, continuously in-focus picture of the entire inside periphery of the storm drain for all conditions encountered during the Work. The remote reading footage counter shall be accurate to within one-half percent (0.5%) over measured distance of the particular section being inspected and shall be displayed on the television monitor. The camera, television monitor and other components of the video system shall be capable of producing a minimum three hundred and fifty (350) line resolution color video picture. The equipment shall be capable of televising the entire length in one direction. When televising storm drains the camera shall be capable of scanning the joints for three hundred and sixty degrees (360°).

3. Televising Procedures

The camera shall be moved through the line at a uniform rate, stopping and providing a complete inspection at each footing drain, at every observed defect, and a three hundred and sixty degree (360°) inspection of each pipe joint to ensure proper documentation of the condition of the storm drain. In no case shall the television camera be pulled at a speed

greater than thirty feet (30') per minute. Manual winches, power winches, TV cable and powered rewinds or other devices that do not obstruct the camera view or interface with proper documentation of the storm drain conditions shall be used to move the camera through the storm drain.

If, during the televising operations, the television camera will not pass through an entire manhole section or storm access point section, the Contractor shall reset the equipment in a manner so that the inspection can continue opposite the obstruction. If the television camera encounters an obstruction within a section not accessible to a manhole or storm drain access point, the Contractor shall remove the obstruction by excavation or other appropriate means, replace whatever pipe is necessary, and retelevise the entire section.

Whenever non-remote powered and controlled winches are used to pull the television camera through the line, telephones, radios, or other suitable means of communication shall be set up between the two manholes or storm drain access points of the section being inspected to ensure that adequate communications exist between members of the crew.

The importance of accurate distance measurements is emphasized. Measurement for location of defects shall be above ground by means of a meter device. Marking on the cable, or the like, which would require interpolation for depth of manhole or storm access points, is not acceptable.

The accuracy of the measurement shall be checked daily by use of a walking meter, roll-a-tape, or other suitable device. Measurements shall be from center to center of each manhole or storm drain access point, unless permission is given by the Engineer to do otherwise. Distance shall be shown on the video data view at all times.

4. Documentation of Televising

Audio and written documentation shall accompany all DVD(s) submitted to the Engineer. DVD(s) shall have printed labels with location information, date format information, and other descriptive information.

The voice recording of the DVD(s) shall make brief but informative comments on data of significance, including, but not limited to, the locations of unusual conditions, type and size of connection, collapsed section, the presence of scale and corrosion, and other discernible features.

The DVD(s) shall include the following:

	Data View	Audio	Written
Report No. (including DVD number(s))	X		X
Date of CCTV inspection	X	X	X
Current weather conditions	X		X
MOA Storm Drain Grid page number	X		X
Upstream and downstream manhole structure numbers, storm drain access point or station numbers.	X	X	X
GPS coordinate locations for upstream and downstream manholes and/or any other storm drain access points. GPS receivers shall provide sub-meter accuracy	X		X
Location, size, type, and length of pipe.	X	X	X
Direction of flow and measurement ("From" manhole/storm drain access point/station number "To" manhole/storm drain access point/station number			X
Tape Counter Footage (current distance along reach)	X		Beginning & End
Sketch showing the street and cross streets where the TV inspection was made			X
Description and location of each defect		X	X
Description and location of each connection		X	X

Article 2.4 Measurement

Measurement for all sizes of pipe shall be based on the horizontal distances and shall be from center to center of manholes, from the center of manholes to center of catch basins, from center of manholes to center of cleanout wye, and from center of manhole to end of pipe including flared end sections. Televising storm drains is considered incidental to the pay item and no separate payment shall be made.

Article 2.5 Basis of Payment

Payment for this Work shall be in accordance with Division 10, Section 10.07 - Measurement and Payment, and shall include full payment for all Work described in this Section.

Payment shall be made under the following units.

ITEM	UNIT
Furnish, Install, and Televise Pipe (Size, Type, Class, Material, Gauge and Type of Coating)	Linear Foot

SECTION 55.03 SUBDRAINS

Article 3.1 General

The Work under this Section consists of the performance of all operations pertaining to furnishing and installing subdrains.

Article 3.2 Material

A. All piping shall be in accordance with the Contract Documents and shall be the sizes shown and specified.

B. The Contractor shall use perforated steel, perforated aluminum or perforated aluminized coated corrugated metal pipe as noted. Corrugated metal pipe shall conform to the provisions of Section 55.02 - Furnish and Install Pipe. Perforations shall be located and sized in accordance with the requirements of AASHTO M 252 and M 294.

C. Corrugated Polyethylene Pipe (CPEP) shall conform to the provisions of Section 55.02 - Furnish and Install Pipe. Size and locate perforations in accordance with the requirements of AASHTO M252 for pipe diameters three to ten inches (3" to 10") and AASHTO M294 for pipe diameters twelve to sixty inches (12" to 60"). Perforations shall be Class 2. Perforations shall be cleanly cut so that water inflow is not restricted and shall be uniformly spaced along the length of the pipe.

   Type D Filter Material shall be used on all CPEP pipe diameters three to ten inches (3" to 10"). Type C Filter Material shall be used on all CPEP pipe diameters from twelve to sixty inches (12" to 60").

D. Geotextile fabric shall conform to Division 20, Section 20.25 – Geotextile Fabric, and shall be non-woven, pervious drainage material.

Article 3.3 Construction

Refer to Standard Detail 55-3 for construction of subdrains. Each phase of construction shall be accomplished in accordance with the applicable sections of these Specifications. Excavation and backfill for furnishing and installing of subdrains shall be in accordance with Division 20, Section 20.13 - Trench Excavation and Backfill. Furnishing and installing subdrains shall be in accordance with Section 55.02 - Furnish and Install Pipe. Furnish filter material in accordance with Division 20, Section 20.17 - Furnish Filter Material.

Article 3.4 Measurement

Measurement for all sizes of pipe shall be based on the horizontal distances and shall be from center to center of manholes, from the center of manholes to center of catch basins, from center of manholes to center of cleanout wye, and from center of manhole to end of pipe including flared end sections. Measurement includes: Furnishing, Installing, and Televising Pipe; Furnishing Filter Material; and, if applicable per Contract Documents, Furnishing and Installing Geotextile Fabric.

Televising Pipe; Furnishing Filter Material; and, if applicable per Contract Documents, Furnishing and Installing Geotextile Fabric.

Article 3.5 Basis of Payment

Payment for this Work shall be in accordance with Division 10, Section 10.07 - Measurement and Payment, and shall include full payment for all Work described in this Section including furnishing and installing pipe, furnishing and placing filter material and, when required by the Contract Documents, furnishing and installing Geotextile Fabric.

Payment shall be made under the following units:

ITEM	UNIT
Furnish & Install Subdrain (Size, Type, Class, Material, and Gauge of Pipe, and Type of Filter Material)	Linear Foot
Furnish & Install Subdrain with Geotextile (Size, Type, Class, Material, and/or Gauge of Pipe, Type of Filter Material, and Type of Geotextile Fabric)	Linear Foot

SECTION 55.04 CONNECTIONS TO EXISTING MANHOLES OR CATCH BASINS

Article 4.1 General

The Work under this Section consists of the performance of all operations pertaining to the construction required for connections to existing manholes or catch basins.

Article 4.2 Construction

Excavation and backfill for connections to existing manholes or catch basins shall be in accordance with Division 20, Section 20.13 - Trench Excavation and Backfill.

Connections to existing manholes or catch basins shall be made in a workmanlike manner. The invert shall be brought into the existing manhole at the elevation shown on the Drawings. The downstream pipe in manholes shall be screened to prevent entry of mortar or other debris from entering the system.

After connection is made to a storm drain manhole and the mortar holding the pipe in place has set, cut the pipe off evenly so that no more than two inches (2") of pipe protrudes into the manhole and any screening shall be removed.

Article 4.3 Measurement

Connection to existing manholes shall be measured as complete units in place.

Article 4.4 Basis of Payment

Payment for this Work shall be in accordance with Division 10, Section 10.07 - Measurement and Payment, and shall include full payment for all Work described in this Section.

Payment shall be made on the following basis:

ITEM	UNIT
Connect to Existing Storm Drain Manhole	Each
Connect to Existing Storm Drain Catch Basin	Each

SECTION 55.05 MANHOLES AND CATCH BASIN MANHOLES

Article 5.1 General

The Work under this Section consists of the performance of all Work required for the construction of storm drain manholes and catch basin manholes complete with frames and covers.

Article 5.2 Material

A. Frames and Covers

The requirement for tensile strength of the gray cast iron shall conform to the requirements of AASHTO M-306. Manhole frames, covers, and grates shall be furnished with machined horizontal bearing surfaces and shall conform to the Standard Details. The cover or grate shall not rock when rotated to any position in the frame. Catch basin manhole castings shall conform to the Standard Details.

Gray iron castings shall have appropriate certifications and be individually marked in accordance with the requirements of AASHTO M-306. Castings which do not possess appropriate AASHTO M-306 certifications and markings shall be replaced by the Contractor at no expense to the Owner.

B. Reinforced Concrete Manholes

Material used in the construction of reinforced concrete manholes shall conform to the requirements of ASTM C-478 and the Standard Details. Cones shall be eccentric unless otherwise approved. Forty-eight inch (48") reinforced concrete pipe may be used for manhole riser sections as an alternate. This pipe shall conform to the requirements of ASTM C-76 with a minimum thickness of five inches (5").

Each precast concrete barrel section and eccentric cone shall be set and sealed by use of a pre-molded plastic gasket pipe joint sealer as manufactured by Henry Co, Ram-Nek Sealant Division or equal and installed to the manufacturer's specification and meets AASHTO M-198, ASTM C990 or Federal Specification SS-S-210.

Cement for mortar used in the construction of manholes shall conform to the requirements of ASTM C-150, Type II. Sand shall conform to the requirements of AASHTO M-45. The mortar shall be composed of one (1) part cement and three (3) parts sand. The joints shall be constructed so as to produce a smooth, regular, watertight surface. Water shall be added in minimum amounts to provide plasticity in placing the mortar. Each concrete adjusting ring and manhole cover/frame that falls outside of a paved road section shall be set and sealed by a pre-molded plastic gasket sealer. Each concrete adjusting ring and manhole cover/frame that falls in a paved road section/sidewalk shall be set in a full bed of mortar.

Refer to Division 30, Section 30.01, Article 1.6 - Mix Requirements for Classes of Concrete, for Specifications pertaining to Class A-3 concrete as required in forming manhole inverts.

Reinforcement steel shall conform to the requirements of ASTM A-185, ASTM A-615, Grade 60 steel, or better, and the Standard Details.

Article 5.3 Construction

A. General

Excavation and backfill for the construction of storm drain manholes and catch basin manholes shall be in accordance with Division 20, Section 20.13 - Trench Excavation and Backfill.

All portions of the manholes must be approved by the Engineer prior to installation in the storm drain system. The Contractor shall provide timely notice (at least two Working days in advance of casting) to allow time for the Engineer to arrange for necessary inspections. Installation of manhole sections without the Engineer's written approval shall not be allowed. This approval does not relieve the Contractor of the responsibility for protection of manholes against damage during handling and installation.

The manhole frames and covers shall be brought to grades shown on the Drawings unless otherwise approved by the Engineer. Manhole rings shall be set in a full bed of mortar and made secure. Grade adjustment rings must be set centered over the manhole and catch basin cone or lid opening with no lateral offset. No more than a one-quarter inch (1/4”) lateral offset is permitted between grade adjustment rings. Total cumulative offset between grade adjustment rings shall not exceed one-half inch (1/2”). Manhole rings and catch basin frames shall be set centered on the opening with a maximum lateral offset of one-half inch (1/2”) permitted.

Manholes shall be installed at the location shown on the Drawings and primary leads shall enter radially at the invert elevations specified. The base section shall be set plumb on a prepared surface. Prepared surface shall be compacted to a minimum of ninety-five percent (95%) of maximum density.

In the case of precast manhole barrel sections where holes need to be bored to provide for the storm drain pipe, the diameter of the bore shall not exceed the outside diameter of the storm drain pipe plus one and one-half inches (1.5”).

Where indicated on the Drawings, a stub shall be provided for future connections to the manhole. The stub shall be sized and positioned as indicated. The end of the stub shall be stopped with a wooden plug, concrete biscuit, or other adequate methods to prevent water, earth or other substances from entering the pipe. Manholes up to twelve feet (12’) in depth shall have ten foot (10’) stubouts; over twelve feet (12’) in depth shall have twenty foot (20’) stubouts.

In the case of poured-in-place manhole construction, if the Contractor elects to accomplish the manhole construction utilizing more than one continuous concrete pour, a keyed construction joint shall be used. These manholes shall have poured-in-place bases. Precast concrete barrel sections shall be set and sealed with premolded plastic gasket. Premolded plastic gaskets for sealing pre-cast concrete barrel sections for manholes shall meet AASHTO M-198, ASTM C-990, or Federal Specification SS-S-210 and shall be installed in accordance with the manufacturer's recommendations. Gaskets shall be trimmed on the inside of the manhole to prevent the excess gasket material from entering the storm drain lines.

B. Storm Drain Manholes and Catch Basin Manholes

Contractor shall construct storm drain manholes in accordance with the Drawings and Standard Details. In the invert of manholes, Contractor shall construct a catch of eighteen inches (18”) minimum depth, unless otherwise specified.

After connecting the storm drain pipe to reinforced concrete manhole or catch basin, seal annular space around pipe penetrations with cement mortar, or an approved equal. Cement mortar shall conform to the requirements of ASTM C-150, Type II. After the mortar has firmly set, Contractor shall cut the pipe evenly so that no more than two inches (2”) of the pipe protrudes into the manhole.

Article 5.4 Measurement

Manholes and catch basin manholes shall be measured as units complete in place. Depth of manholes and catch basin manholes shall be based upon a measurement to the nearest foot from top of casting to the top of the base slab. Standard depths for manholes and catch basin manholes shall be constructed in accordance with the Standard Details and designated as to type.

TYPE	STANDARD DEPTH
Type I, II, III	twelve feet (12’)

All depths over the specified standard depth shall be paid for under the bid item "Additional Depth to Manhole" as defined below:

Additional Depth for Manholes:

This item consists of the construction of additional depth to manholes over and above the twelve foot (12') depth specified below.

Additional depth to manholes and catch basin manholes shall be complete in place.

Article 5.5 Basis of Payment

Payment for this Work shall be in accordance with Division 10, Section 10.07 - Measurement and Payment, and shall include full payment for all Work described in this Section.

Payment shall be made on the following basis:

ITEM	UNIT
Construct (Type, Diameter*) Manhole	Each
Construct (Type) Catch Basin Manhole	Each
Additional Depth to (Type) Manhole	Linear Foot

* For Type III manholes, include the diameter in the descriptor for the appropriate pay item.

SECTION 55.06 WATERTIGHT MANHOLE FRAMES AND COVER

Article 6.1 General

The Work under this Section consists of the performance of all Work required for the construction of watertight manhole frames and covers.

Article 6.2 Material

Watertight frames and covers for manholes and similar appurtenances shall be of cast iron and conform to the dimension shown in the Standard Details. The requirement for tensile strength of the gray iron shall be 30,000 PSI minimum in accordance with the requirements of ASTM A-48 and the requirement for transverse breaking load shall be 2,000 pounds in accordance with the requirements of ASTM A-438. Contact surfaces between frames and covers shall be machined to provide a uniform contact surface. Manhole covers shall have identification letters as shown on the Standard Details.

Article 6.3 Construction

Provide watertight Manhole Frames and Covers as indicated on the Drawings and in accordance with the Standard Details.

Article 6.4 Measurement

Watertight manhole frames and covers shall be measured as complete units in place.

Article 6.5 Basis of Payment

Payment for this Work shall be in accordance with Division 10, Section 10.07 - Measurement and Payment, and shall include full payment for all Work described in this Section.

Payment is to be made only for the additional cost of furnishing and installing the watertight frame and cover which exceeds the cost of the standard frame and cover included in the completed manhole unit price.

Payment shall be made under the following unit:

ITEM	UNIT
Additional Cost of Watertight Manhole Frame and Cover	Each

SECTION 55.07 ADJUST STORM DRAIN MANHOLE CONE TO FINISH GRADE

Article 7.1 General

The Work under this Section consists of providing all operations pertaining to the adjustment of existing manhole cones to finish grade. All broken and/or missing manhole components are to be replaced with new materials furnished and installed by the Contractor.

Article 7.2 Material

All materials used in the adjustment of manhole cones including mortar, steps, barrel sections, blackpremolded plastic gaskets, etc., shall conform to the requirements for manholes as outlined in Section 55.05 - Manholes and Catch Basin Manholes. Radial concrete manhole blocks may be used for upward adjustments in certain cases if approved by the Engineer.

Article 7.3 Construction

The Contractor shall remove the existing cone and add to or remove portions of the barrel of each manhole requiring a cone adjustment. Each precast concrete barrel and cone section shall be set upon and sealed with a premolded plastic gasket which shall meet AASHTO M-198, ASTM C990, or Federal Specification SS-SS-210. Any damage to manholes resulting from construction under this Contract shall be repaired or the damaged portion replaced at the Contractor's expense. All inverts, benchwalls, and/or catch areas shall be left clean and free from any foreign materials.

Contractor shall adjust the manhole cone to finish grade prior to placement of asphalt pavement. New asphalt shall not be cut for adjustments.

Article 7.4 Measurement

Manhole cone adjustments shall be measured as units, complete in place.

Article 7.5 Basis of Payment

Payment for this Work shall be in accordance with Division 10, Section 10.07 - Measurement and Payment, and shall include full payment for all Work described in this Section.

Payment for cone adjustments shall include compensation for changes in height per the applicable Standard Details, unless otherwise directed by the Engineer. In no case will payment for both ring and cone adjustments be made for the same manhole. Any adjustments requiring cutting of new asphalt shall not be paid and shall be deducted from the plan quantity.

Payment shall be made under the following unit:

ITEM	UNIT
Adjust Storm Drain Manhole Cone	Each

SECTION 55.08 ADJUST STORM DRAIN MANHOLE RING TO FINISH GRADE

Article 8.1 General

The Work under this Section consists of providing all operations pertaining to the adjustment of existing manhole rings to finish grade, All broken and/or missing manhole components are to be replaced with new materials furnished and installed by the Contractor in accordance with these Specifications.

Article 8.2 Material

All materials used in the adjustment of manhole rings shall conform to the requirements for manholes as outlined in Section 55.05 – Manholes and Catch Basin Manholes.

The Contractor may utilize Neenah R-1979 Series Manhole Adjusting Rings, or an approved equal, for adjusting the manhole to finished grade.

Article 8.3 Construction

The Contractor shall adjust the manhole rings in accordance with the applicable Standard Details. The Contractor shall set the adjusting rings in a bed of premolded plastic gasket material that meets AASHTO M-198, ASTM C990, or Federal Specification SS-S-210. The casting can be set in a bed of mortar with steel adjusting shims in the event the grade will not allow the premolded plastic gasket material. The steel shims shall be placed in four locations as a minimum and must be approved by the Engineer. Any damage to manholes resulting from construction under this Contract shall be repaired or the damaged portion replaced at the Contractor's expense.

Grade adjustment rings must be set centered over the manhole and catch basin cone or lid opening with no lateral offset. No more than a one-quarter inch (1/4") lateral offset is permitted between grade adjustment rings. Total cumulative offset between grade adjustment rings shall not exceed one-half inch (1/2"). Manhole rings and catch basin frames shall be set centered on the opening with a maximum lateral offset of one-have inch (1/2") permitted.

Milling is an approved method of lowering the manhole grade. A horizontal milling process ware as the casting is milled to lower the top to meet the finish grade of the street. This method must be submitted to the Engineer for approval.

Contractor shall remove and replace pavement around the manhole prior to adjustment in such a way to minimize impact to the travel path of the roadway. Contractor shall either use infrared treatment to amalgamate old and new pavement or shall make the pavement cut in such a way to prevent a straight line patch from occurring perpendicular to the direction of travel. Pavement cuts shall be made in a diamond shape in relation to the travel path rather than a square shape.

Contractor shall adjust the manhole cone to finish grade prior to placement of asphalt pavement. New asphalt shall not be cut for adjustments.

Article 8.4 Measurement

Manhole ring adjustments shall be measured as units, complete in place.

Article 8.5 Basis of Payment

Payment for this Work shall be in accordance with Division 10, Section 10.07 – Measurement and Payment, and shall include full payment for all Work described in this Section.

Payment for ring adjustment shall include full compensation for changes in height. In no case will payment for both ring and cone adjustments be made for the same manhole. Any adjustments requiring cutting of new asphalt shall not be paid and shall be deducted from the plan quantity.

Payment shall be made under the following unit:

ITEM	UNIT
Adjust Storm Drain Manhole Ring	Each

SECTION 55.09 CONSTRUCT CATCH BASIN

Article 9.1 General

The Work under this Section consists of the performance of all operations pertaining to the construction and installation of catch basins.

Article 9.2 Material

Materials used in the construction of catch basins shall conform to the requirements of ASTM C-478 and the Standard Details.

Cement for mortar used in the construction of catch basins shall conform with the requirements of ASTM C-150, Type II. Sand shall conform with the requirements of AASHTO M-45.

Article 9.3 Construction

Excavation and backfill for furnishing and installing of catch basin shall be in accordance with Division 20, Section 20.13 - Trench Excavation and Backfill.

After the mortar has set firmly, the pipe is to be cut off evenly so that not more than two inches (2") of the pipe protrudes into the catch basin.

Reducing slab shall be set and sealed by a pre-molded plastic gasket joint sealer as manufactured by Henry Co., Ram-Nek Sealant Division or equal and installed to the manufacturer's specification. Plastic gasket joint sealers shall meet AASHTO M-198, ASTM C-990, or Federal Specifications SS-S-210.

Contractor shall bring catch basin rings and covers to the grades shown on the Drawings. Grade stakes defining the elevation of the casting, and hub stakes with tacks to define the line for the curb face shall be set by the Contractor. The Contractor may accomplish final setting of the casting by wedging it up with masonry material as approved by the Engineer. The casting shall then be set in a full bed of mortar and made secure.

Mortar used in the construction of catch basins shall be composed of one (1) part cement and three (3) parts sand. All joints and connections are to be mortared. The joints shall be made so as to produce a smooth, regular, watertight surface. Water shall be added in minimum amounts to provide plasticity in placing the mortar.

Contractor shall use Class A-3 concrete, as defined in Division 30, Section 30.01, Article 1.6 - Mix Requirements For Classes of Concrete, in the formation of catch basin base slabs.

Article 9.4 Measurement

Catch Basins shall be measured as units complete in place.

Article 9.5 Basis of Payment

Payment for this Work shall be in accordance with Division 10, Section 10.07 - Measurement and Payment, and shall include full payment for all Work described in this Section.

Payment shall be made on the following basis:

ITEM	UNIT
Construct Catch Basin	Each

SECTION 55.10 RELOCATE CATCH BASIN OR CATCH BASIN MANHOLE

Article 10.1 General

The Work under this Section consists of providing all operations pertaining to relocating of existing catch basin or catch basin manholes.

Article 10.2 Material

All materials used in relocation of catch basins or catch basin manholes shall conform to the requirements for catch basins as outlined in Section 55.05 - Manholes and Catch Basin Manholes, and Section 55.09 - Construct Catch Basin.

Article 10.3 Construction

The Contractor shall note the fact that he may be required to relocate more than one type of catch basin or catch basin manhole under this Contract. All excavation, trenching and backfill necessary for the removal and relocation shall be considered incidental to this item. The Contractor shall backfill the excavation with suitable, non-frost-susceptible material and compact it to not less than ninety-five percent (95%) of maximum density as directed by the Engineer. If additional material is required for backfill it will be paid for under the item "Furnish Trench Backfill." Existing leads may require relocation up to a maximum length of fifteen feet (15') to provide proper alignment. Such relocation shall be considered incidental to this Item. Relocation of existing pipe leads and any additional pipe leads shall be incidental Work. Pipe used shall be the same size and type as the existing leads. The relocated catch basin or catch basin manholes shall be adjusted to finish grade as directed by the Engineer.

Article 10.4 Measurement

Relocation of catch basins or catch basin manholes will be measured on a basis of units complete in place at the new location and accepted by the Engineer.

Article 10.5 Basis of Payment

Payment for this Work shall be in accordance with Division 10, Section 10.07 - Measurement and Payment, and shall include full payment for all Work described in this Section.

Payment shall be made under the following units:

ITEM	UNIT
Relocate Catch Basin	Each
Relocate Catch Basin Manhole	Each

SECTION 55.11 REMOVE MANHOLE OR CATCH BASIN

Article 11.1 General

The Work under this Section consists of providing all operations pertaining to the removal and disposal or salvage of existing manholes.

Article 11.2 Construction

Salvaged materials shall be removed in a workman-like manner and delivered to a site as directed by the Engineer. Non-salvageable materials shall be removed to a Contractor-provided disposal site.

Any excavation required in the removal shall be considered incidental to this item. The Contractor shall backfill the excavation with a suitable, non-frost susceptible material and compact it to not less than ninety-five percent (95%) of maximum density as directed by the Engineer. If additional material is required for backfill, it will be paid for under the Item "Furnish Trench Backfill." Existing pipes shall be suitably plugged and abandoned unless otherwise noted.

Article 11.3 Measurement

Removal of existing manholes or catch basins will be measured as units.

Article 11.4 Basis of Payment

Payment for this Work shall be in accordance with Division 10, Section 10.07 - Measurement and Payment, and shall include full payment for all Work described in this Section.

Payment shall be made under the following units:

ITEM	UNIT
Remove Manhole	Each
Remove Catch Basin	Each

SECTION 55.12 ADJUST CATCH BASIN TO FINISH GRADE

Article 12.1 General

The Work under this Section consists of providing all operations pertaining to the adjustment of existing catch basins to finish grade.

Article 12.2 Material

All materials used in the adjustment of catch basins shall conform to the requirements for catch basins as outlined in Section 55.09 - Construct Catch Basin.

Article 12.3 Construction

Rotational as well as vertical displacement of the catch basin top and casting might occur. All adjustments will be accomplished as directed by the Engineer. Any damage to catch basins resulting from construction under this Contract shall be repaired or the damaged portion replaced at the Contractor's expense.

Grade adjustment rings must be set centered over the catch basin cone or lid opening with no lateral offset. No more than a one-quarter inch (1/4”) lateral offset is permitted between grade adjustment rings. Total cumulative offset between grade adjustment rings shall not exceed one-half inch (1/2”). Catch basin frames shall be set centered on the opening with a maximum lateral offset of one-have inch (1/2”) permitted.

Article 12.4 Measurement

Catch basin adjustments shall be measured as units, complete in place.

Article 12.5 Basis of Payment

Payment for this Work shall be in accordance with Division 10, Section 10.07 - Measurement and Payment, and shall include full payment for all Work described in this Section.

Payment shall be made under the following unit.

ITEM	UNIT
Adjust Catch Basin to Finish Grade	Each

SECTION 55.13 ABANDON CATCH BASIN LEAD

Article 13.1 General

The Work under this Section consists of performing all operations pertaining to the abandonment of catch basin leads. Catch basin leads to be abandoned may be crushed in place, filled with sand slurry, or removed, at Contractor's option and approval by the Engineer.

Article 13.2 Materials

Sand slurry shall consist of a mixture of water and sand with an approximate ratio of seven gallons of water per cubic foot of sand. Native materials that contain no lumps, frozen material, organic matter, or other deleterious material are acceptable for use in the slurry mixture.

Article 13.3 Construction

Contractor shall abandon all catch basin leads as shown on the Drawings. The opening in the storm drain manhole where the catch basin lead enters shall be plugged with concrete grout and the lead filled with sand slurry.

Where catch basin leads lie within trench excavation, as called for in the Drawings and Specifications, the leads shall be removed.

Article 13.4 Measurement

Abandonment of each catch basin lead shall be measured as a complete unit. This item will include materials, excavations, placement of materials, disposal of unusable materials, backfill, and incidental operations.

Article 13.5 Basis of Payment

Payment for this Work shall be in accordance with Division 10, Section 10.07 - Measurement and Payment, and shall include full payment for all Work described in this Section.

Payment shall be made under the following unit:

ITEM	UNIT
Abandon Catch Basin Lead	Each

SECTION 55.14 CONSTRUCT STORM CLEANOUT

Article 14.1 General

The Work under this Section consists of the performance of all Work required for the construction and installation of storm drain cleanouts.

Article 14.2 Material

Materials used in the construction of storm drain cleanouts shall conform to the Standard Details.

Article 14.3 Measurement

Storm drain cleanouts shall be measured as units, complete in place.

Article 14.4 Basis of Payment

Payment for this Work shall be in accordance with Division 10, Section 10.07 - Measurement and Payment, and shall include full payment for all Work described in this Section.

Payment shall be made on the following basis:

ITEM	UNIT
Construct Storm Drain Cleanout	Each

SECTION 55.15 ADJUST STORM CLEANOUT TO FINISH GRADE

Article 15.1 General

The Work under this Section consists of providing all operations pertaining to adjustment of existing cleanouts to finish grade. All broken and/or missing cleanout components are to be replaced with new materials furnished and installed by the Contractor in accordance with these Specifications.

Article 15.2 Material

All materials used in the adjustment of cleanouts shall conform to the requirements for cleanouts as outlined in Section 55.14 - Construct Storm Cleanout.

Article 15.3 Construction

The Contractor may be required to adjust more than one type of cleanout under this Contract. All adjustments will be accomplished as directed by the Engineer. Any damage to cleanouts resulting from construction under this Contract shall be repaired or the damaged portion replaced at the Contractor's expense.

Article 15.4 Measurement

Cleanout adjustments will be measured per unit, complete in place.

Article 15.5 Basis of Payment

Payment for this Work shall be in accordance with Division 10, Section 10.07 - Measurement and Payment, and shall include full payment for all Work described in this Section.

Payment shall be made under the following unit:

ITEM	UNIT
Adjust Storm Cleanout to Finish Grade	Each

SECTION 55.16 CONSTRUCT DROP CONNECTION

Article 16.1 General

The Work under this Section consists of the performance of all Work required for the construction and installation of storm drain drop connections to manholes.

Article 16.2 Material

Pipe and fittings used in the construction of drop connections for storm drain shall conform to the requirements of Section 55.02 - Furnish and Install Pipe and the Standard Details.

Article 16.3 Construction

Excavation and backfill for the construction of drop sewer connection to manhole shall be in accordance with Division 20, Section 20.13 - Trench Excavation and Backfill.

Over-excavation under drop connection shall require compaction of not less than ninety-five percent (95%) of the maximum density prior to installation of the pipe and fittings, or the concrete cradle.

Refer to Division 30, Section 30.01, Article 1.6 - Mix Requirements for Classes of Concrete for specifications pertaining to Class A-3 concrete.

Article 16.4 Measurement

Storm drain drop connections shall be measured as units, complete in place.

Article 16.5 Basis of Payment

Payment for this Work shall be in accordance with Division 10, Section 10.07 - Measurement and Payment, and shall include full payment for all Work described in this Section.

Payment shall be made on the following basis:

ITEM	UNIT
Construct Drop Storm Drain Connection (Detail #)	Each

SECTION 55.17 FLUME DOWNDRAIN

Article 17.1 General

The Work under this Section consists of performing all operations pertaining to furnishing and installing flume downdrain(s) with anchor assemblies at locations shown on the Drawings.

Article 17.2 Materials

All material utilized in the fabrication of the galvanized metal flume downdrain(s) shall conform to Section 55.02 - Furnish and Install Pipe with a minimum sheet thickness of six-hundredths inches (0.060").

Article 17.3 Construction

The flume downdrain(s) shall be fabricated in accordance with the details and dimensions shown on the Drawings. No dissimilar metal shall be allowed at any installation. Anchor assemblies shown on the Drawings may be used with an aluminum installation provided the anchor assemblies are electrically insulated. All flume sections shall be connected together and to the existing pipe by means of galvanized bolts as indicated on the Drawings.

Article 17.4 Measurement

Measurement shall be based on the horizontal length of flume downdrain measured from the top end of the flume downdrain to end of flared or half-round metal pipe modified end section complete in place with anchors properly placed in the ground and bolted to the flume downdrain pipe.

Article 17.5 Basis of Payment

Payment for this Work shall be in accordance with Division 10, Section 10.07 - Measurement and Payment, and shall include full payment for all Work described in this Section.

Payment shall be made under the following unit:

ITEM	UNIT
Furnish and Install Flume Downdrain (Size)	Linear Foot

SECTION 55.18 FOOTING DRAIN SERVICES

Article 18.1 General

The Work under this section includes all material, labor, and equipment necessary for construction, connection, and/or disconnection/reconnection of footing drain services to the storm drain system.

Article 18.2 Material

For new footing drain service construction, Contractor shall provide CPEP (Type S) Pipe and Filter Material (Type B) as specified on the Drawings. Connect footing drain services to the storm drain with a saddle of a type recommended by the pipe manufacturer.

For reconnection of footing drain services, Contractor shall reconnect the existing footing drain service to the storm drain with a saddle of appropriate size and of a type recommended by the pipe manufacturer.

Article 18.3 Construction

Excavation and backfill for the construction of footing drain services is incidental to the bid item reconnect footing drain services. The number and approximate location of footing drain services are shown on the Drawings.

Article 18.4 Measurement

Footing drain services is measured as units, complete in place.

The Work under this Section includes all materials, equipment, and Work required to construct, connect, disconnect, and/or reconnect the footing drain services as indicated on the Drawings and in accordance with this Division and Division 20 – Earthwork. Such materials, equipment, and Work are incidental and no additional payment is made for the following:

> Trench Excavation and Backfill, Unusable or Surplus Excavation, Disposal of Unsuitable or Surplus Material, Usable Excavation, Type B Filter Material, Furnish and Install Subdrain Pipe, Mechanical Compaction, Type II Trench Backfill, Shoring, Sheeting, and Bracing, Portable and Steel Shield, and Canousa Wrap.

Article 18.5 Basis of Payment

Payment for this Work shall be in accordance with Division 10, Section 10.07 - Measurement and Payment, and shall include full payment for all Work described in this Section.

ITEM	UNIT
Disconnect/Reconnect Footing Drain Service	Each
Construct Footing Drain Service (Size)	Each

SECTION 55.19 CONSTRUCT OPEN DITCH

Article 19.1 General

The Work under this Section consists of the performance of all Work required for the excavation, embankment and spreading of material necessary to construct an open ditch.

Article 19.2 Construction

A. Excavation

Excavation shall be to the grade and ditch cross section shown on the Drawings. The final ditch shall have no projections of roots, stumps, rock or similar matter. Material hauled from the job site for disposal shall be paid for under Division 20, Section 20.27 – Disposal of Unusable or Surplus Material.

B. Embankment

Embankment shall be to the shape and at the location shown on the Drawing. The type of material utilized to construct ditch banks and dikes shall be as noted on the Drawing, or as approved by the Engineer. If additional material is required for embankment, it will be paid for under Division 20 - Earthwork.

C. Cleanup

The Contractor shall maintain the ditch and keep it open and free from all debris, as directed by the Engineer until final acceptance.

Article 19.3 Measurement

Measurement for open ditch construction shall be per linear foot along the slope of the ditch.

Article 19.4 Basis of Payment

Payment for this Work shall be in accordance with Division 10, Section 10.07 - Measurement and Payment, and shall include full payment for all Work described in this Section.

Payment shall be made on the following basis:

ITEM	UNIT
Construct Open Ditch	Linear Foot

SECTION 55.20 CULVERT

Article 20.1 General

The Work under this Section consists of the performance of all materials and operations required to furnish and install culverts.

Article 20.2 Construction

Excavation and backfill for furnishing and installing of culverts shall be in accordance with Division 20, Section 20.13 - Trench Excavation and Backfill.

The Contractor shall furnish and install culverts as shown on the Drawings. The pipe shall be installed to the alignment and grades as required by the Drawings. Pipe materials shall meet the Specifications included in Section 55.01 - General and Section 55.02 - Furnish and Install Pipe, of this Division. The pipe shall be installed so that there is a minimum of twelve inches (12") of cover over the pipe before the placement of surfacing materials. Excavation, backfilling, compaction, and grading or ditching necessary to direct water into or out of the culvert, are incidental items and no separate payment shall be made.

Where additional backfill material is required, it shall be classified fill or backfill in accordance with Division 20, Section 20.21 – Classified Fill and Backfill and as directed by the Engineer. Disposal of unusable material shall be paid under "Unusable Excavation" or "Disposal of Unsuitable or Surplus Material" as designated in the Bid Proposal.

Article 20.3 Measurement

Measurement of culverts shall be per linear foot along the slope of the pipe from end to end.

Article 20.4 Basis of Payment

Payment for this Work shall be in accordance with Division 10, Section 10.07 - Measurement and Payment, and shall include full payment for all Work described in this Section.

Payment shall be made on the following basis:

ITEM	UNIT
Culvert (Pipe Size, Type, Gauge, Shape)	Linear Foot

SECTION 55.21 FIN DRAIN

Article 21.1 General

The Work under this Section consists of performing all operations pertaining to furnishing and installing an impervious subsurface fin drain system as shown on the Drawings or as directed by the Engineer.

Article 21.2 Materials

The fin drain system shall consist of a flexible, impervious, vertical core made of a deeply-dimpled, high-strength styrene sheet and a perforated storm pipe enveloped in a non-woven polypropylene filter fabric.

The subsurface fin drain system shall be Miradrain 5000 (for double-sided drainage) manufactured by Mirafi Inc., P.O. Box 240967, Charlotte, NC, 28224, telephone (704) 523-7477, or an approved equal.

A. Fin Core

The fin core shall consist of a deeply-dimpled, high-strength, non biodegradable styrene sheet. Provide fin core which is dimpled on both sides of the shaft. Dimple pattern shall create open channels between the dimples 0.40 to 0.80 cm wide and not less than 0.80 cm deep, which allows water flow along the face of the fin core on both sides in all directions.

B. Filter Fabric

The filter fabric shall conform to the requirements of Division 20, Section 20.25 - Geotextile Fabric for Subsurface Drainage and Riprap Liner or an approved equal.

C. Pipe

The perforated encased pipe shall conform to the requirements of Section 55.02 - Furnish and Install Pipe. Compaction adjacent to the pipe shall conform to Division 20, Section 20.13 - Trench Excavation and Backfill and the manufacturer's recommendations. The perforations in the pipe shall conform to Section 55.03 - Subdrains.

Article 21.3 Construction

Contractor shall Install the fin drain in accordance with the manufacturer's recommendations and the applicable provisions of Division 20, Sections 20.17 - Furnish Filter Material; Section 20.01, Article 1.5 - Compaction Standards; Section 20.25 - Geotextile Fabric; Section 55.02 - Furnish and Install Pipe; Section 55.03 – Subdrains; and this Section. The Work under this Section shall include mechanical compaction, non-woven geotextile fabric, pipe, fin core, installing the fin drain system, filter material (Type C), Trench Excavation and Backfill, and Disposal of Unusable or Surplus Material.

Article 21.4 Measurement

The method of measurement for furnishing and installing the fin drain shall be per linear foot based on the horizontal distance measured from center of manhole to center of manhole and center of manhole to center of cleanout riser.

Article 21.5 Basis of Payment

Payment for this Work shall be in accordance with Division 10, Section 10.07 - Measurement and Payment, and shall include full payment for all Work described in this Section.

Payment shall be made under the following unit:

ITEM	UNIT
Furnish and Install Fin Drain (Size, Type)	Linear Foot

SECTION 55.22 OIL AND GRIT SEPARATOR

Article 22.1 General

The Work under this section consists of performing all operations pertaining to constructing a storm drain oil and grit separator, complete with manhole structure, frames, covers, and diversion apparatus as shown on the Drawings, or as the Engineer directs.

Article 22.2 Description

The oil and grit separator is a below-grade structure consisting of a prefabricated diversion apparatus fastened securely to the inside of a concrete storm drain manhole. The separator is designed to remove oil and sediment from stormwater and to bypass flows during peak events to prevent scour of accumulated sediment.

Contractor shall furnish and install an oil and grit separator, Stormceptor Model STC3600 manufactured by:

Rinker Materials/Stormceptor
800 NE Tenney Road, Suite 413
Vancouver, WA 98685
Phone: 503-572-9894
FAX: 503-296-2023

Local Contacts:
D & S Concrete, Inc.
2140 East Dimond Boulevard
Anchorage, AK 99507
Phone: 907-349-6031
FAX 907-349-4597
or an approved equal.

Local Contacts:
CONTECH Vortechnics
OGS Systems
111 E. 100th Avenue
Anchorage, Alaska 99515
Phone: 907-344-1144
Fax: 907-344-1174.
or an approved equal.

Article 22.3 Materials

All excavation, backfill, and compaction required to install the oil and grit separator is incidental to this item. Contractor shall backfill the excavation with Type II Classified Fill and Backfill material. If foundation material is required, it will be paid under the bid item "Foundation Backfill (Type II)."

The storm drain manhole shall conform to the requirements of Section 55.05 - Manholes and Catch Basin Manholes and the Drawings. The diversion apparatus shall conform to the requirements of the oil and grit separator manufacturer's specifications.

Contractor shall provide access to the structure through two (2) manhole frames and covers. The smaller cover shall conform to Standard Detail 55-4. The manufacturer of the oil and grit separator shall provide the larger cover clearly marked "oil/grit separator" and the larger cover shall support HS-20 loadings.

Article 22.4 Construction

Contractor shall install the separator in accordance with Section 55.05 - Manholes and Catch Basin Manholes and with the separator unit manufacturer's specifications.

Contractor shall backfill around the manhole with a minimum of three feet (3') Type II Classified Fill and Backfill to the full depth of the manhole, compacted in accordance with Division 20, Section 20.21 - Classified Fill and Backfill. Classified Fill and Backfill is incidental to this pay item, and no separate payment shall be made.

Article 22.5 Measurement

Oil and grit separator is measured as a complete unit in place and shall include the concrete manhole, diversion apparatus, frames, covers, and classified backfill. All clearing and grubbing or excavation, and providing Type II Classified Fill and Backfill, disposal of unusable or unsuitable material necessary to construct the oil and grit separator, is incidental to this Work item. Foundation backfill, if required, will be paid pursuant to Division 20, Section 20.19 - Furnish Foundation Backfill.

Article 22.6 Basis of Payment

Payment for this Work shall be in accordance with Division 10, Section 10.07 - Measurement and Payment, and shall include full payment for all Work described in this Section.

Payment will be made under the following unit:

ITEM	UNIT
Oil and Grit Separator (Model #)	Each

SECTION 55.23 HEAT TRACE SYSTEM

Article 23.1 General

The Work under this Section consists of performing all operations pertaining to furnishing and installing a heat trace system as required by the Drawings and these Specifications.

Locations of heat cables, manholes, catch basin and storm drain services, and appurtenances shown on the Drawings are approximate and the exact locations will be established in the field in consultation with the Engineer.

Materials furnished shall be new, except such used materials as may be specifically provided for on the Drawings or Special Provisions. Where an existing system is to be modified, the existing materials shall be reused on the project or disposed as shown on the Drawings or in the Special Provisions.

All systems shall be complete and in operation with all materials in conformance with Contract Documents at the time of final acceptance.

Article 23.2 Regulations and Codes

Work shall be as specified in Division 80, Section 80.01, Article 1.2 - Regulations and Codes and this Section.

Heat cables shall be provided with Factory Mutual or UL listing indicating approval for freeze protection in the indicated locations shown on the Drawings and specified herein.

Article 23.3 Equipment Lists and Drawings

Work shall be as specified in Division 80, Section 80.01, Article 1.3 - Equipment List(s) and Drawings and this Section. The portfolio(s) shall include:

1. Submit manufacturer's installation and testing instructions.

2. Submit operations and maintenance instructions.

3. Submit complete control diagrams in block and schematic form indicating wire sizes, raceway sizes, locations, component configurations, equipment layouts, and all other information necessary to completely describe each and every portion of the controls installation.

Article 23.4 Warranties, Guarantees, and Inspection Sheets

Provide in accordance with Division 80, Section 80.01, Article 1.4 - Warranties, Guarantees, and Inspection Sheets.

Article 23.5 Safety Precautions

Before starting Work on existing heat cable systems, Contractor shall disconnect and lock-off load centers feeding circuits for the heat trace system. Disconnection shall be made by utility or main and branch breakers locked in "off" position.

Suitable signs shall be posted at load centers when Contractor is working on any of the circuits fed from the load center.

Article 23.6 Heat Cables

Self-limiting thermoplastic insulation, parallel resistance heating cable with a 300-volt insulation rating, with output of eight (8) watts/linear foot at a 240-volt single phase operation and tinned copper metal braid with fluoropolymer overjacket as manufactured by Thermon Type FLX (8-FLX-2-FOJ). Substitutions: Items of other manufacturers of same quality, construction, rating, capacity, function, and characteristics may be acceptable.

Labeling on cable: Manufacturer, catalog number, rating in volts, or in volts and AMPS.

Color coding: Non-heating lead wire shall be red for 240-volt nominal circuit voltage.

Contractor shall install cables in accordance with manufacturer's recommendations for this application.

The heat cable insulation's resistance and continuity shall be tested in accordance with methods and times as required in manufacturer's recommendations. Tests shall be conducted and test results recorded at the following minimum times:

1. When the cable arrives on the job site before installation.

2. After it is installed completely.

Contractor shall install heat cable(s) in watertight galvanized rigid conduit and junction boxes in manholes, storm drains, and other parts of storm drain systems as shown on the Drawings.

Contractor shall install cable in a single length without splices or joints. Contractor shall provide bonding and grounding of drain in accordance with cable manufacturer's recommendations.

All cables shall be protected by 30 mA GFI circuit breakers.

Contractor shall secure cable in dead-end raceways in accordance with manufacturer's recommendations to ensure cable remains in place after installation.

See Drawings for additional installation requirements.

Contractor shall mount all components grouped neatly and securely fastened to surfaces in accordance with manufacturer's recommendations.

Provide engraved nameplate at junction box serving heat cables in each storm drain manhole. Nameplate shall be white letters on red background and include the message "WARNING 240 V. HEAT CABLE(S)" and include load center location.

Article 23.7 Measurement

The length of measurement shall be the horizontal length of the storm drain systems to be heat traced. Measurement includes all terminations, markings, and incidental supplies as required to meet the provisions of this Section. Cables installed in manholes and catch basins will not be measured, but rather the following distances will be considered standard unless determined otherwise by the Engineer.

Manhole	forty feet (40')
Catch Basin	sixteen feet (16')

Article 23.8 Basis of Payment

Payment for this Work shall be in accordance with Division 10, Section 10.07 - Measurement and Payment, and shall include full payment for all Work described in this Section.

Payment shall be made under the following unit:

ITEM	UNIT
Heat Trace	Linear Foot

MUNICIPALITY OF ANCHORAGE
STANDARD SPECIFICATIONS

DIVISION 55
STORM DRAIN SYSTEMS
STANDARD DETAILS

STANDARD CONSTRUCTION SPECIFICATIONS
MISCELLANEOUS
DIVISION 55
INDEX OF STANDARD DETAILS

55-1	CPEP Storm Pipe Connection
55-2	Corrugated Metal Pipe Band Detail
55-3	Subdrain
55-4	Storm Drain Manhole Type I - Pipe ≤ 24”
55-5	Storm Drain Manhole Type II - 24” to 36”
55-6	Storm Drain Manhole Type III
55-7	Storm Drain Manhole Cover
55-8	Storm Drain Top Intake Cover
55-9	Storm Drain Beehive Intake Cover
55-10	Manhole Heights
55-11	Precast Concrete Reducing Slab (72” or 48” to 26”)
55-12	Precast Concrete Reducing Slab (72” to 48”)
55-13	Precast Concrete Two Hole Reducing Slab (72” to two 25 1/2”)
55-14	Precast Concrete Reducing Slab (112” to 72”)
55-15	Precast Concrete Reducing Slab (140” to 72”)
55-16	Precast Concrete Reducing Slab (168” to 72”)
55-17	Manhole Cone Adjustment
55-18	Manhole Ring Adjustment
55-19	Catch Basin Inlet Frame and Hood for Type 1 Curb and Gutter
55-20	Catch Basin Inlet Grates for Type 1 Curb and Gutter
55-21	Catch Basin Inlet for Type 2 Curb and Gutter
55-22	Precast Catch Basin
55-23	Storm Drain Cleanout
55-24	Storm Drain Drop Connection (2’ Min Drop)
55-25	Storm Drain Drop Connection (4’ Min Drop)
55-26	Footing Drain Service Detail
55-27	Driveway Culvert Details

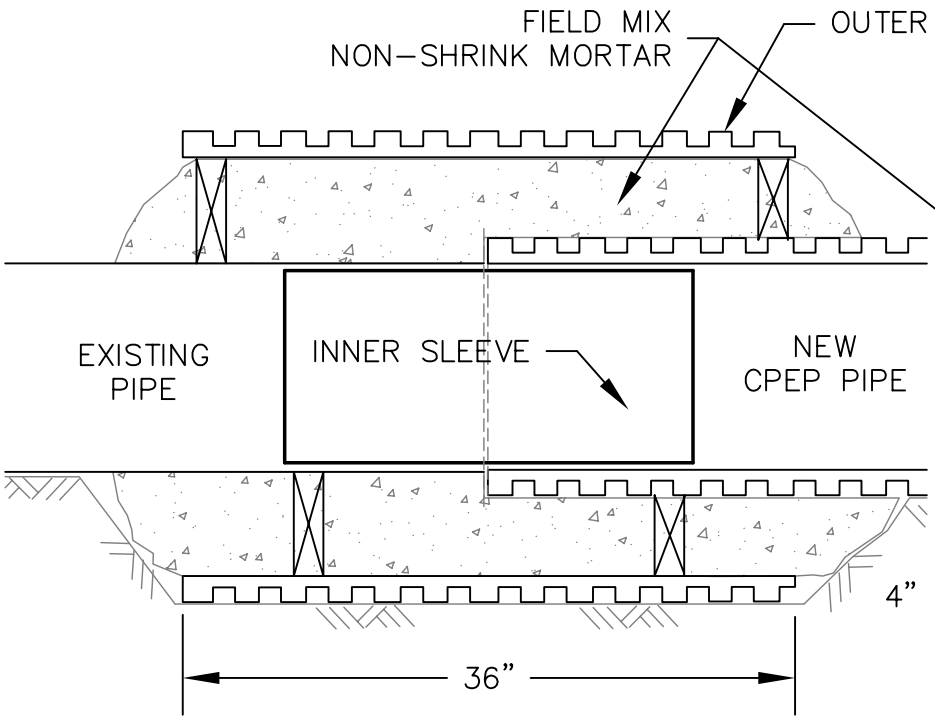

SIDE VIEW

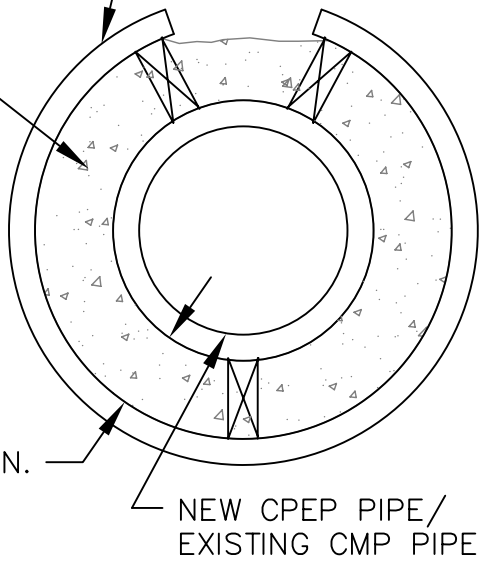

END VIEW

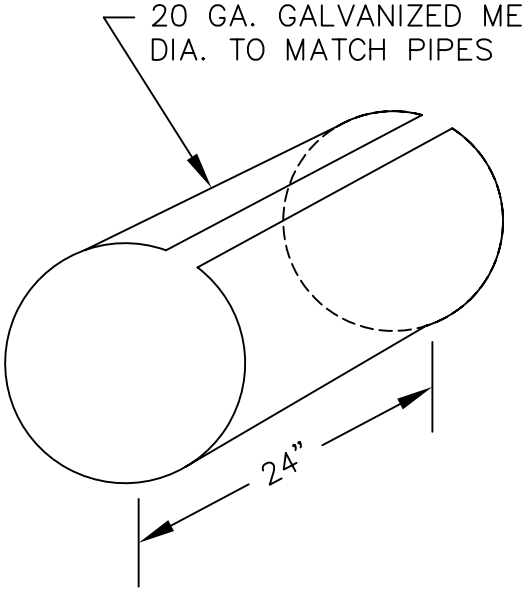

INNER SLEEVE

NOTES:

1. MATCH INVERTS OF EXISTING PIPE AND NEW CPEP PIPE. INNER SLEEVE SHALL FORM A SMOOTH TRANSITION, WITHOUT AN ABRUPT EDGE WITH NEW CPEP PIPE AND EXISTING CMP PIPE.
2. INSTALL 24" LONG INNER SLEEVE.
3. INSTALL A 36" LONG OUTER SLEEVE, CENTER ON JOINT, AS A CONCRETE FORM.
4. FILL OUTER SLEEVE WITH NON-SHRINK MORTAR.
5. USE POTABLE WATER IN MINIMUM AMOUNTS TO PROVIDE PLASTICITY IN PLACING THE MORTAR.
6. BACKFILL AND COMPACT TRENCH.

MUNICIPALITY OF ANCHORAGE	SCALE: NTS APPROVED: REVISED: 4/08	**CPEP STORM PIPE CONNECTION**	SECTION # 55.02 DETAIL # 55-1

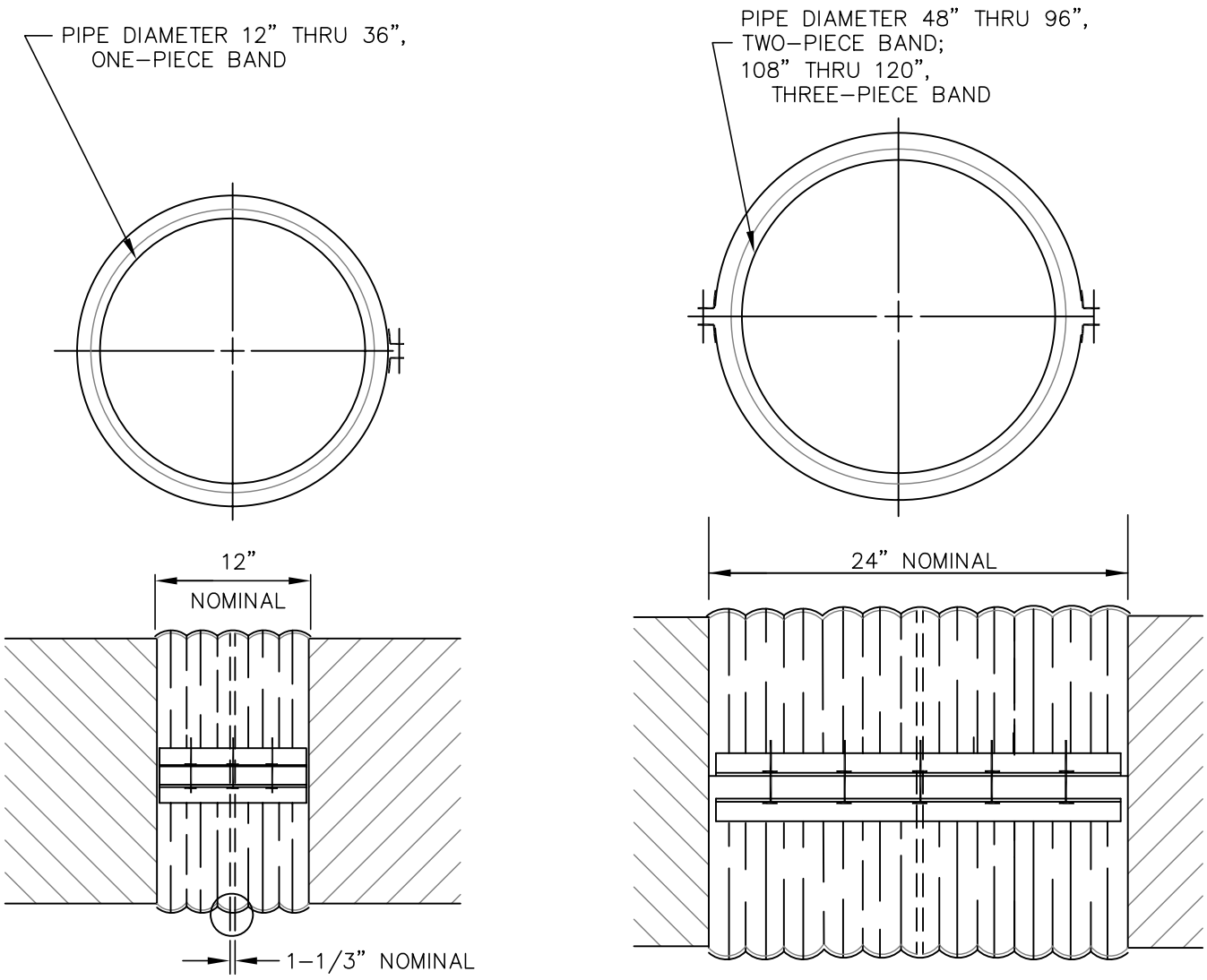

NOTES:

1. 12" THRU 36" PIPE ENDS RE-CORRUGATED TO ANNULAR 2 VALLEYS MIN. PER END.
2. 48" THRU 120" PIPE ENDS RE-CORRUGATED TO ANNULAR 4 VALLEYS MIN. PER END.
3. BAND ANGLES TO BE 2"x2"X12" GA. MIN.
4. BAND MATERIAL AND FABRICATION SHALL CONFORM TO AASHTO M-36 AND AASHTO M-218; PROVIDE 16 GAUGE BANDS FOR 12" THRU 120" DIAMETER PIPES.
5. DIMPLED TYPE CONNECTING BANDS ARE ALLOWABLE ONLY WHERE FITTINGS ARE USED IN NEW OR EXISTING CONSTRUCTION, FOR REPAIRS TO DAMAGED CMP, AND FOR EXTENSIONS TO CMP WITHOUT ANNULAR ENDS. SIZE BANDS IN ACCORDANCE WITH ABOVE SCHEDULE (MIN. 12").
6. BOLT SIZE SHOULD BE 1/2" DIAMETER BY 8" LONG. NUTS SHALL BE PROVIDED WITH A WASHER.

MUNICIPALITY OF ANCHORAGE	SCALE: NTS APPROVED: REVISED: 10/07	CORRUGATED METAL PIPE BAND DETAIL	SECTION # 55.02 DETAIL # 55-2

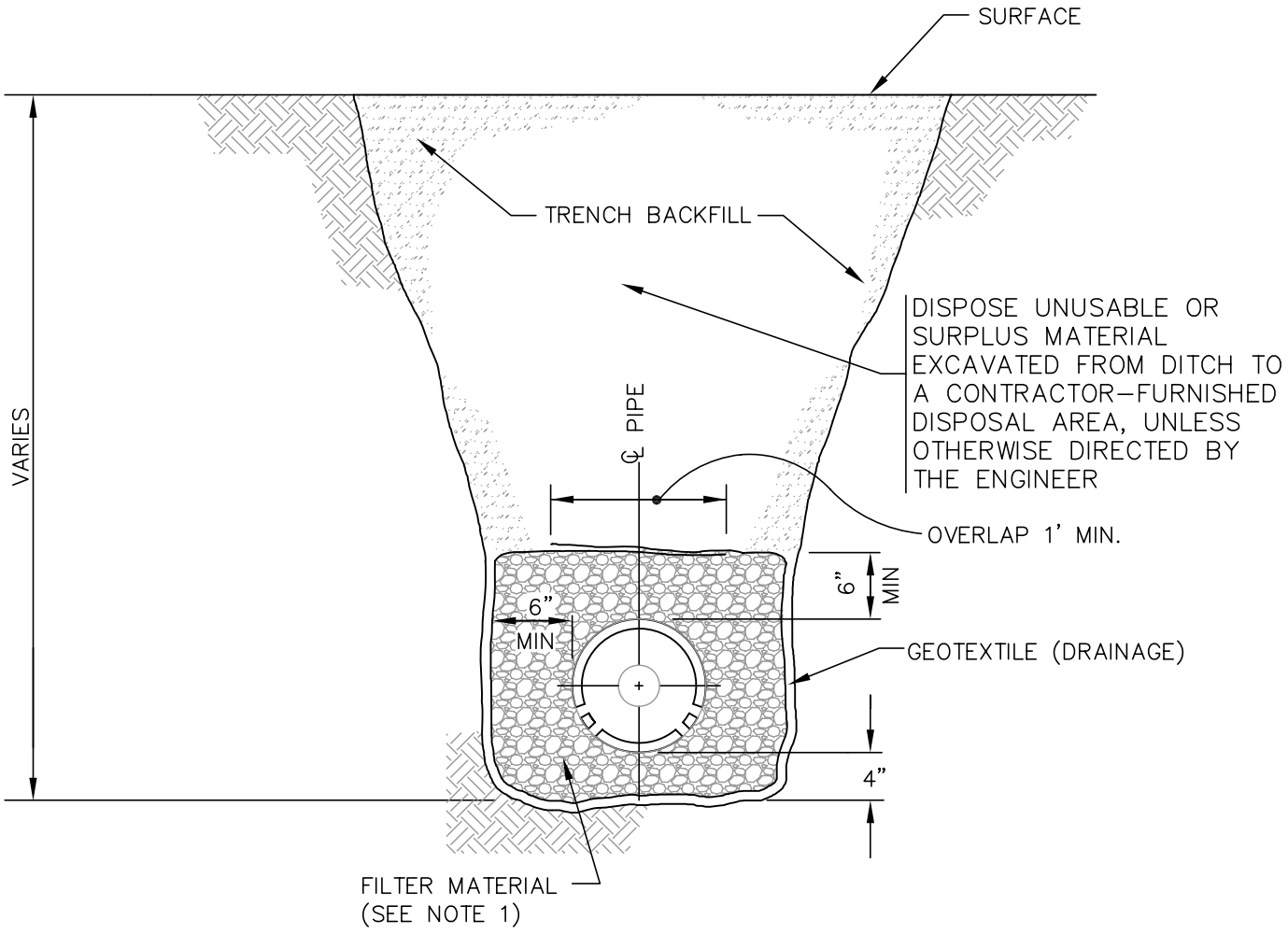

NOTES:

1. PROVIDE FILTER MATERIAL TYPE AS SPECIFIED IN THE CONTRACT DOCUMENTS.
2. COMPACT BACKFILL UNDER THE EXISTING OR PROPOSED ROAD PRISM TO A MINIMUM OF 95% OF MAXIMUM DENSITY.
3. TRENCH BACKFILL SHALL BE CLASSIFIED BACKFILL AS SPECIFIED IN THE DRAWINGS.

REVISION: 12/09 ADDED NOTE 3; REMOVED PIPE PERF DETAIL

MUNICIPALITY OF ANCHORAGE	SCALE: NTS APPROVED: REVISED: 12/09	SUBDRAIN	SECTION # 55.03 DETAIL # 55–3

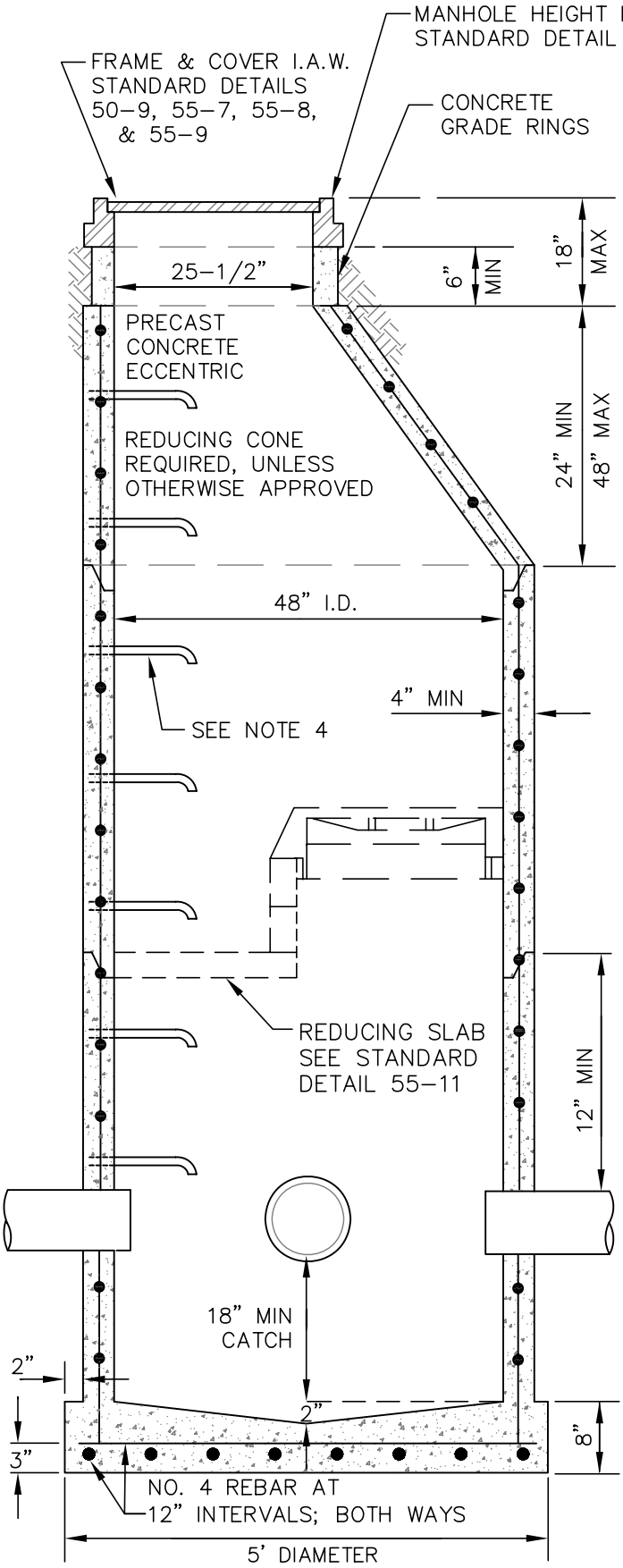

NOTES:

1. MANHOLE SECTIONS SHALL CONFORM TO A.S.T.M. C-478.
2. EXTEND PIPE 2" INTO MANHOLE. SEAL PIPE PENETRATIONS WITH NON-SHRINKABLE GROUT MIXED WITH POTABLE WATER I.A.W. MANUFACTURERS RECOMMENDATIONS.
3. BLOCKOUTS SHALL BE FORMED.
4. PLACE RUNGS 12" ON-CENTER ON UNOBSTRUCTED SIDE OF MANHOLE 18" MAX. FROM BOTTOM OF MANHOLE & 6" MAX. FROM TOP OF CONE. IF UNOBSTRUCTED SIDE NOT AVAILABLE, BOTTOM RUNG TO BE PLACED 6" OVER SMALLEST PIPE. SEE MANHOLE STEP STANDARD DETAIL 50-6.
5. MANHOLE SHALL HAVE MINIMUM OF ONE 6" GRADE RING.
6. BACKFILL AROUND MANHOLE WITH A MINIMUM OF 3' TYPE II CLASSIFIED FILL & BACKFILL. BACKFILL SHALL BE INCIDENTAL TO COST OF MANHOLE INSTALLATION.
7. CATCH BASIN LEADS SHALL ENTER THE MANHOLE AT LEAST ONE PRIMARY LEAD DIAMETER ABOVE THE TOP OF THE PRIMARY LEAD UNLESS MINIMUM PIPE SLOPES CANNOT BE ACHIEVED.
8. STEEL REQ'D FOR BARREL SHALL CONFORM TO A.S.T.M. C-478. EMBED STEEL IN BASE SO THAT FIRST BARREL SECTION IS CONNECTED WITH BASE.
9. "RAM-NEK" OR EQUAL AND PRIME BARREL JOINTS. HEAT "RAM-NEK" AND SEAL SURFACES BEFORE FINAL ASSEMBLY.
10. PRIMARY LEADS NOT TO EXCEED 24" CPEP OR HDPEP WITH INCLUDED ANGLE BETWEEN LEADS GREATER THAN OR EQUAL TO 135°, OR PRIMARY LEADS NOT TO EXCEED 18" CPEP OR HDPEP WITH INCLUDED ANGLE LESS THAN 135°.
11. A TYPE I MANHOLE SHALL NOT BE USED WHEN BOTH CATCH BASIN AND ACCESS FUNCTIONS ARE REQUIRED.

MUNICIPALITY OF ANCHORAGE	SCALE: NTS APPROVED: REVISED: 11/08	**STORM DRAIN MANHOLE TYPE I PIPE ≦ 24"**	SECTION # 55.05 DETAIL # 55-4

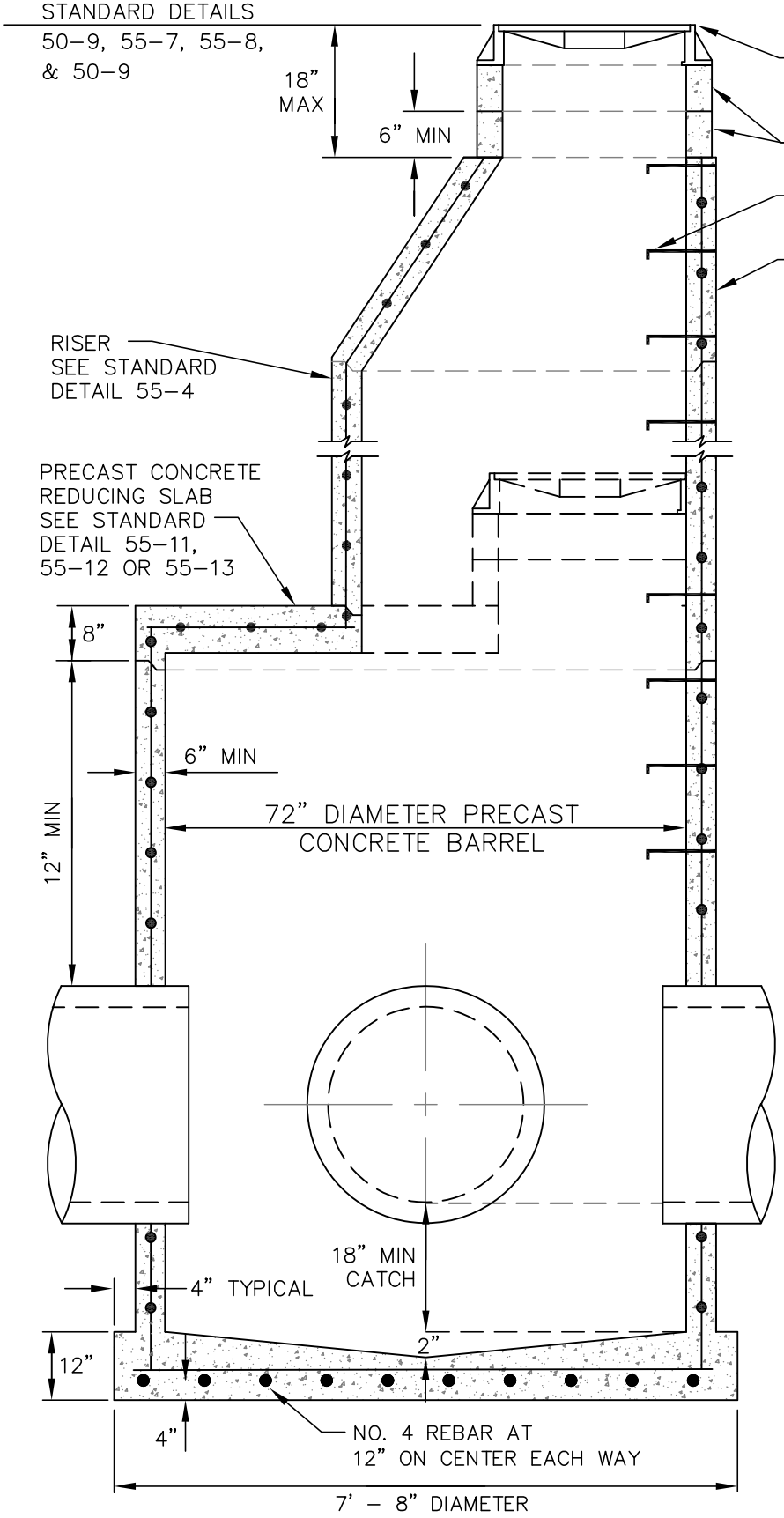

NOTES:

1. USE STANDARD DETAIL 55-4, NOTE 1
2. USE STANDARD DETAIL 55-4, NOTE 2
3. USE STANDARD DETAIL 55-4, NOTE 3
4. USE STANDARD DETAIL 55-4, NOTE 4
5. USE STANDARD DETAIL 55-4, NOTE 5
6. USE STANDARD DETAIL 55-4, NOTE 6
7. USE STANDARD DETAIL 55-4, NOTE 7
8. USE STANDARD DETAIL 55-4, NOTE 8
9. USE STANDARD DETAIL 55-4, NOTE 9
10. PRIMARY LEADS NOT TO EXCEED TWO 36" CPEP OR HDPEP WITH INCLUDED ANGLE BETWEEN LEADS GREATER THAN OR EQUAL TO 135°.
11. USE THE TWO HOLE PRECAST REDUCING SLAB IDENTIFIED IN STANDARD DETAIL 55-13 WHEN ACCESS AND CATCH BASIN FUNCTIONALITY IS REQUIRED. CONTRACTOR SHALL ALIGN THE MANHOLE SO THAT THE LADDER RUNGS ARE IN LINE WITH THE MANHOLE ACCESS LID. A 3" GRADE RING UNDER THE CATCH BASIN IS SUFFICIENT FOR THE TWO-HOLE CONFIGURATION.

REVISION: 12/11 AMENDED NOTE 11 TO PROVIDE ADDITIONAL CLARITY FOR TWO-HOLE SYSTEM

MUNICIPALITY OF ANCHORAGE	SCALE: NTS APPROVED: REVISED: 12/11	**STORM DRAIN MANHOLE TYPE II 24" TO 36"**	SECTION # 55.05 DETAIL # 55-5

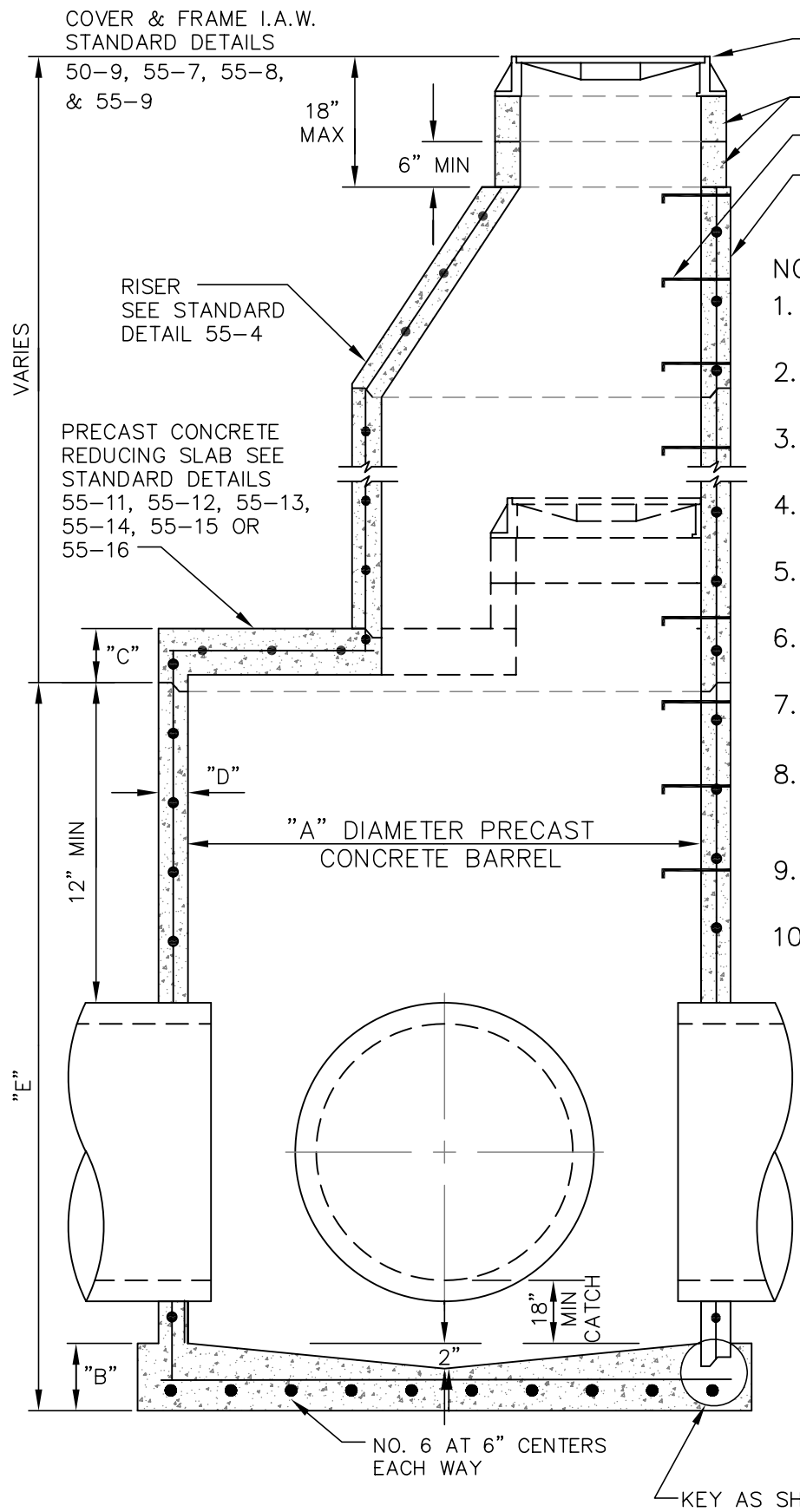

NOTES:

1. USE STANDARD DETAIL 55-4, NOTE 1
2. USE STANDARD DETAIL 55-4, NOTE 2
3. USE STANDARD DETAIL 55-4, NOTE 3
4. USE STANDARD DETAIL 55-4, NOTE 4
5. USE STANDARD DETAIL 55-4, NOTE 5
6. USE STANDARD DETAIL 55-4, NOTE 6
7. USE STANDARD DETAIL 55-4, NOTE 7
8. STEEL REQ'D FOR BARREL SHALL CONFORM TO A.S.T.M. C-478.
9. USE STANDARD DETAIL 55-4, NOTE 9
10. CONE CANNOT REDUCE TO LESS THAN 72" WHEN BOTH CATCH BASIN AND ACCESS FUNCTIONS ARE REQUIRED. SEE STANDARD DETAILS 55-4 AND 55-5.

LEGEND			
MH I.D.	96"	120"	144"
"A"	96"	120"	144"
"B"	12"	16"	16"
"C"	12"	14"	14"
"D"	8"	10"	12"
"E"	76" MAX	72" MAX	56" MAX

MUNICIPALITY OF ANCHORAGE

SCALE: NTS

APPROVED:

REVISED: 9/08

STORM DRAIN MANHOLE TYPE III

SECTION # 55.05

DETAIL # 55-6

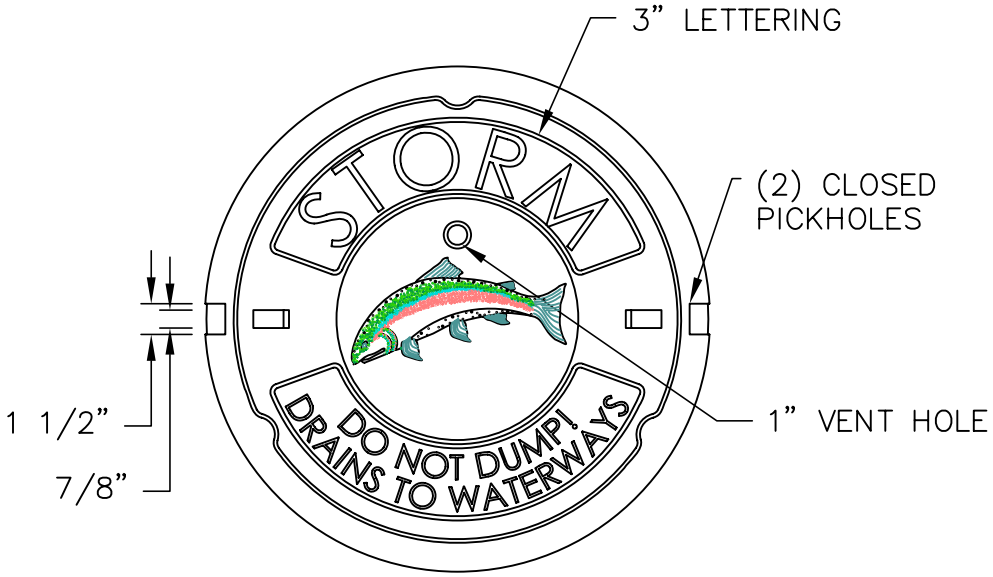

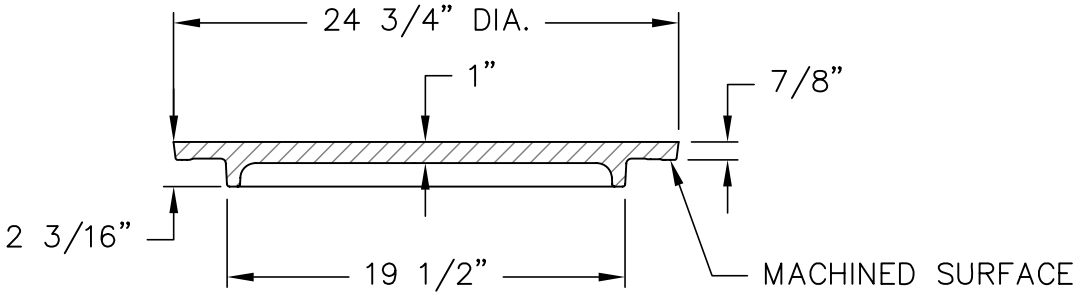

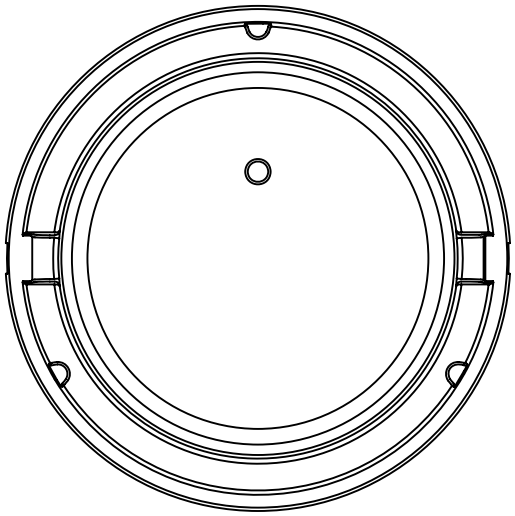

MUNICIPALITY OF ANCHORAGE	SCALE: NTS APPROVED: REVISED: 10/08	**STORM DRAIN MANHOLE COVER**	SECTION # 55.05 DETAIL # 55–7

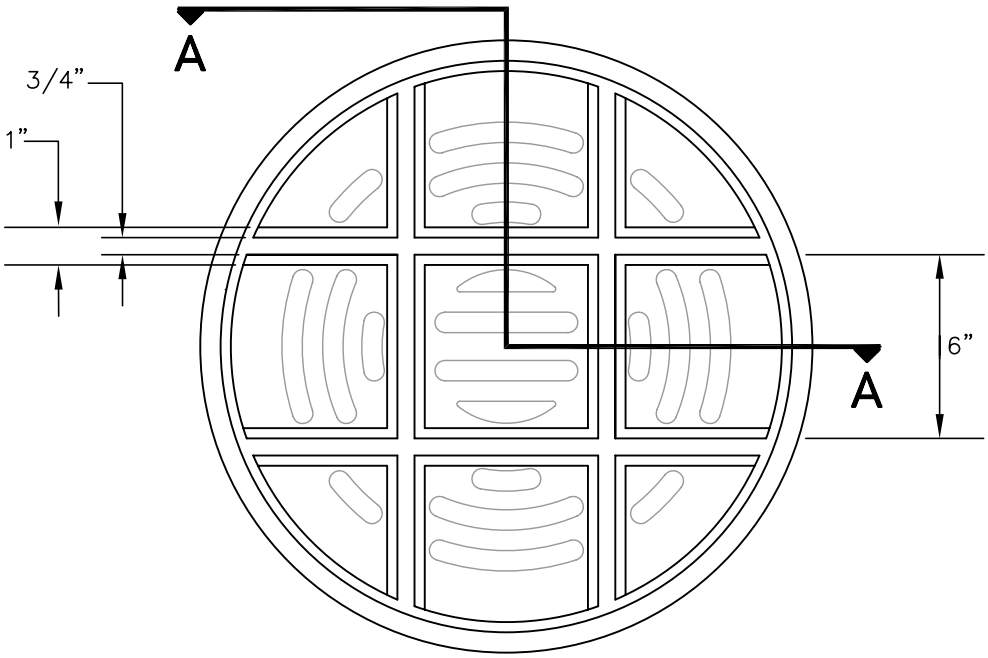

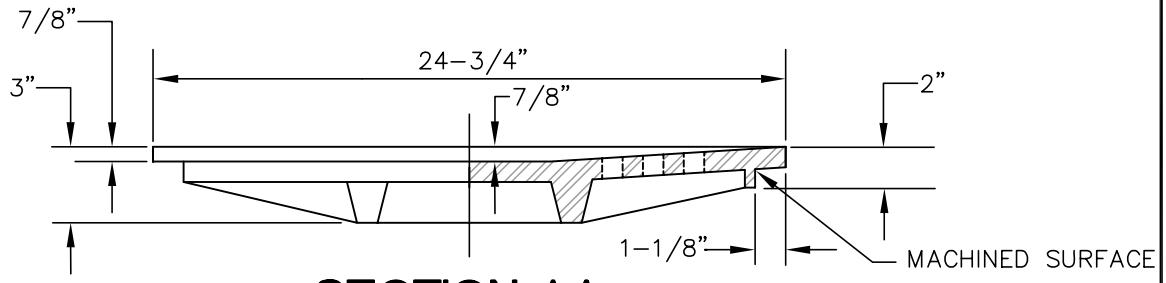

SECTION AA

2000 P.S.I. STRENGTH REQUIREMENT
FOR TRANSVERSE BREAKING LOAD
PER A.S.T.M. A-438

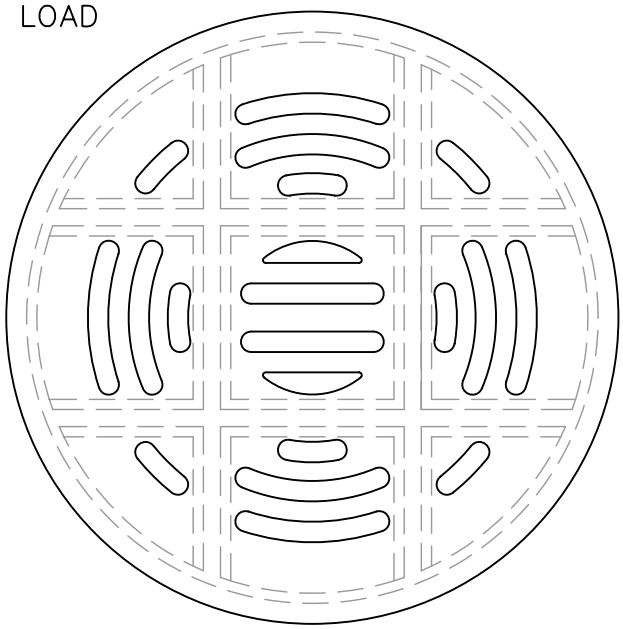

REVISION: 12/09 FIXED 2" DEPTH DIMENSION IN SECTION AA

MUNICIPALITY OF ANCHORAGE	SCALE: NTS APPROVED: REVISED: 12/09	**STORM DRAIN TOP INTAKE COVER**	SECTION # 55.05 DETAIL # 55-8

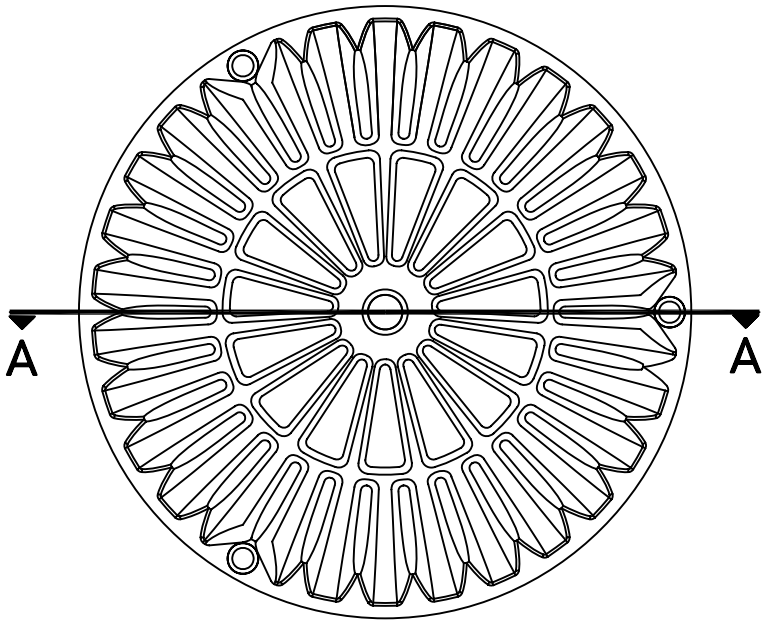

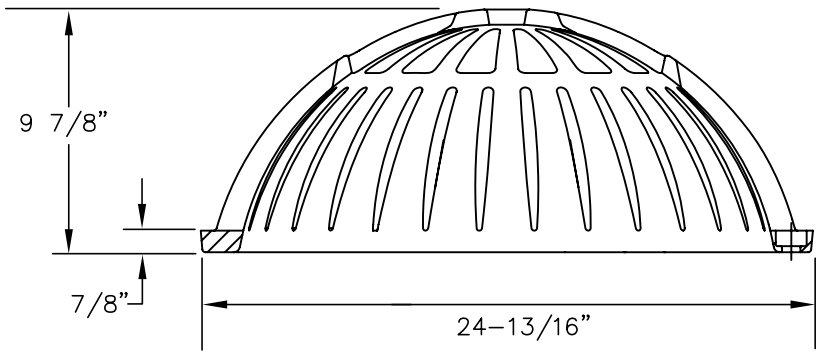

SECTION AA

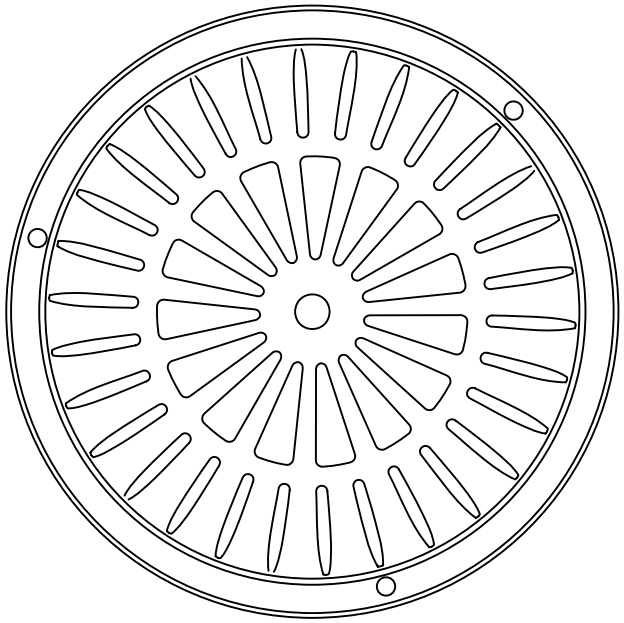

MUNICIPALITY OF ANCHORAGE	SCALE: NTS APPROVED: REVISED: 10/08	**STORM DRAIN** **BEEHIVE INTAKE COVER**	SECTION # 55.05 DETAIL # 55–9

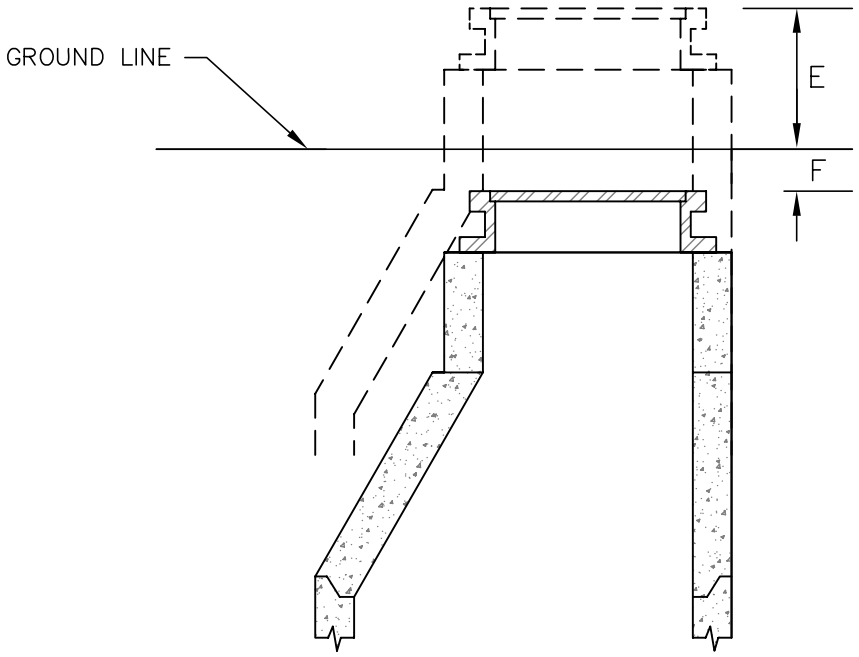

LOCATION	E	F
BACKYARDS, GRAVEL STREETS, AND ALLEY AREAS WHERE TRAVELED.		6" TO 12"
UNDEVELOPED AND SWAMPY AREAS	24" MIN	
HIGHWAY R.O.W.'S OUTSIDE TRAFFIC AREAS	6"	
PAVED STREETS (FEATHER PAVEMENT AT EDGE TO SMOOTH TRANSITION)		1/2"±1/4"

MUNICIPALITY OF ANCHORAGE

SCALE: NTS

APPROVED:

REVISED: 10/08

MANHOLE HEIGHTS

SECTION # 55.05

DETAIL # 55–10

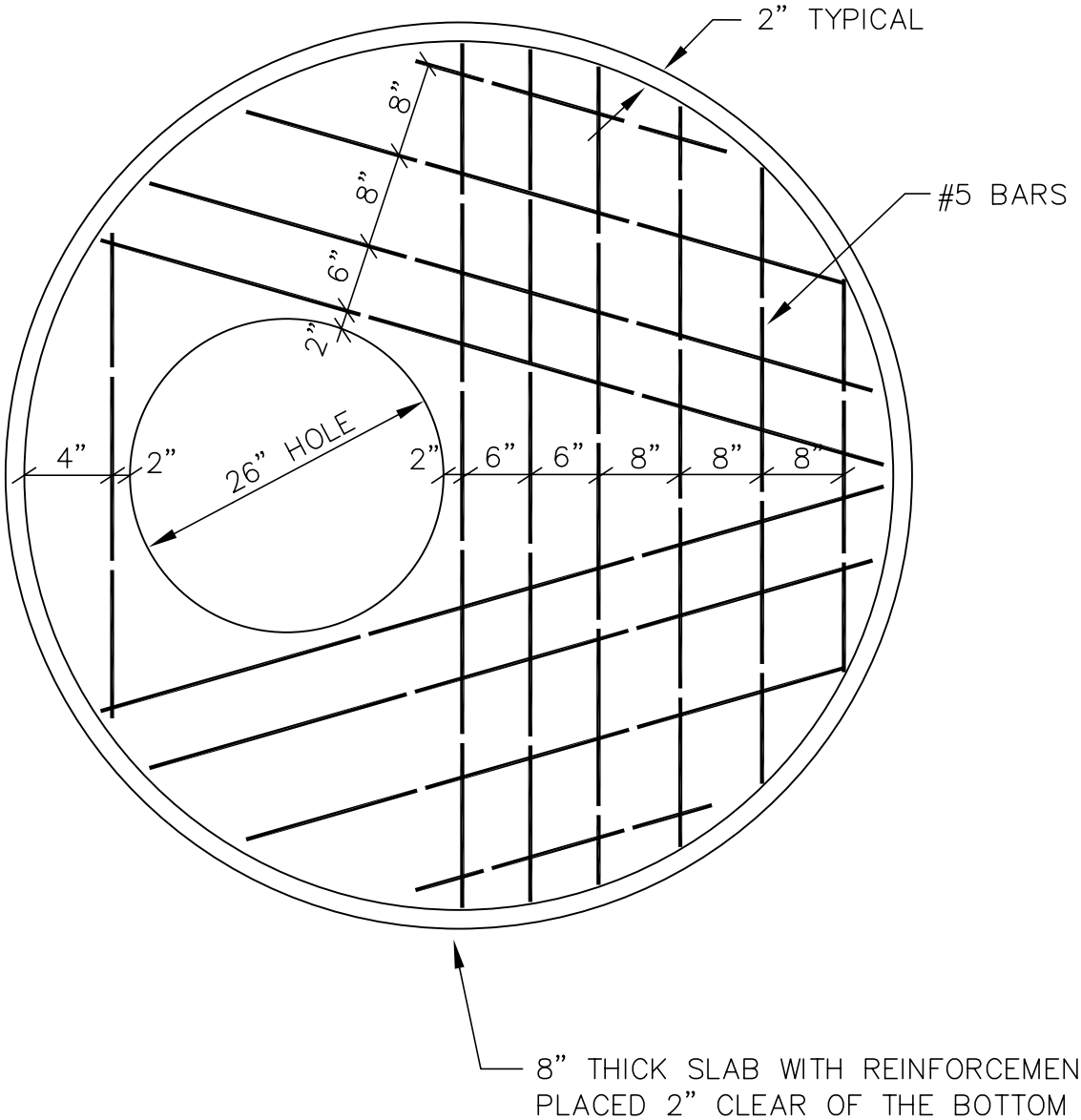

MUNICIPALITY OF ANCHORAGE	SCALE: NTS APPROVED: REVISED: 11/08	**PRECAST CONCRETE REDUCING SLAB (72" OR 48" TO 26")**	SECTION # 55.05 DETAIL # 55–11

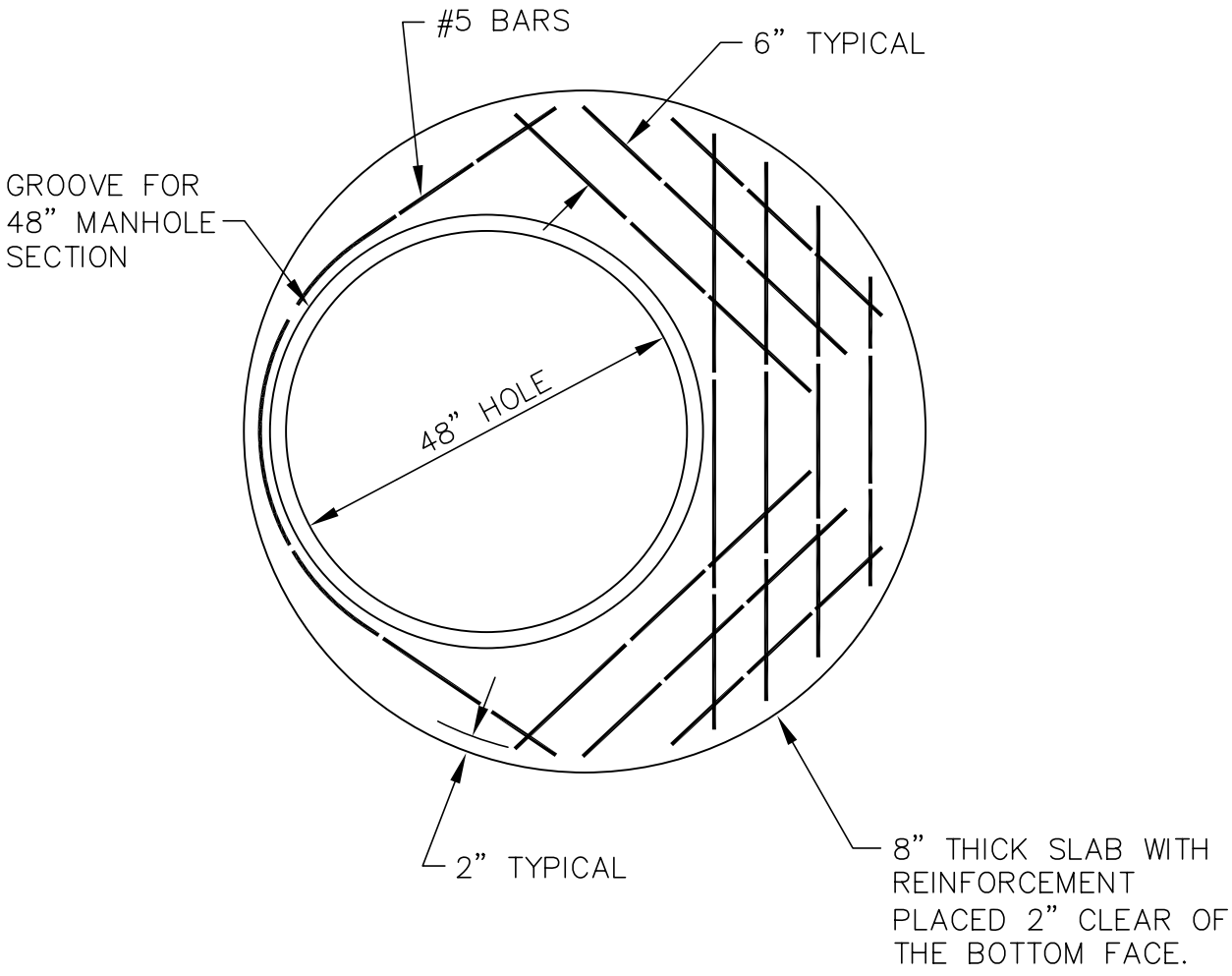

MUNICIPALITY OF ANCHORAGE	SCALE: NTS APPROVED: REVISED: 11/08	**PRECAST CONCRETE REDUCING SLAB (72" TO 48")**	SECTION # 55.05 DETAIL # 55–12

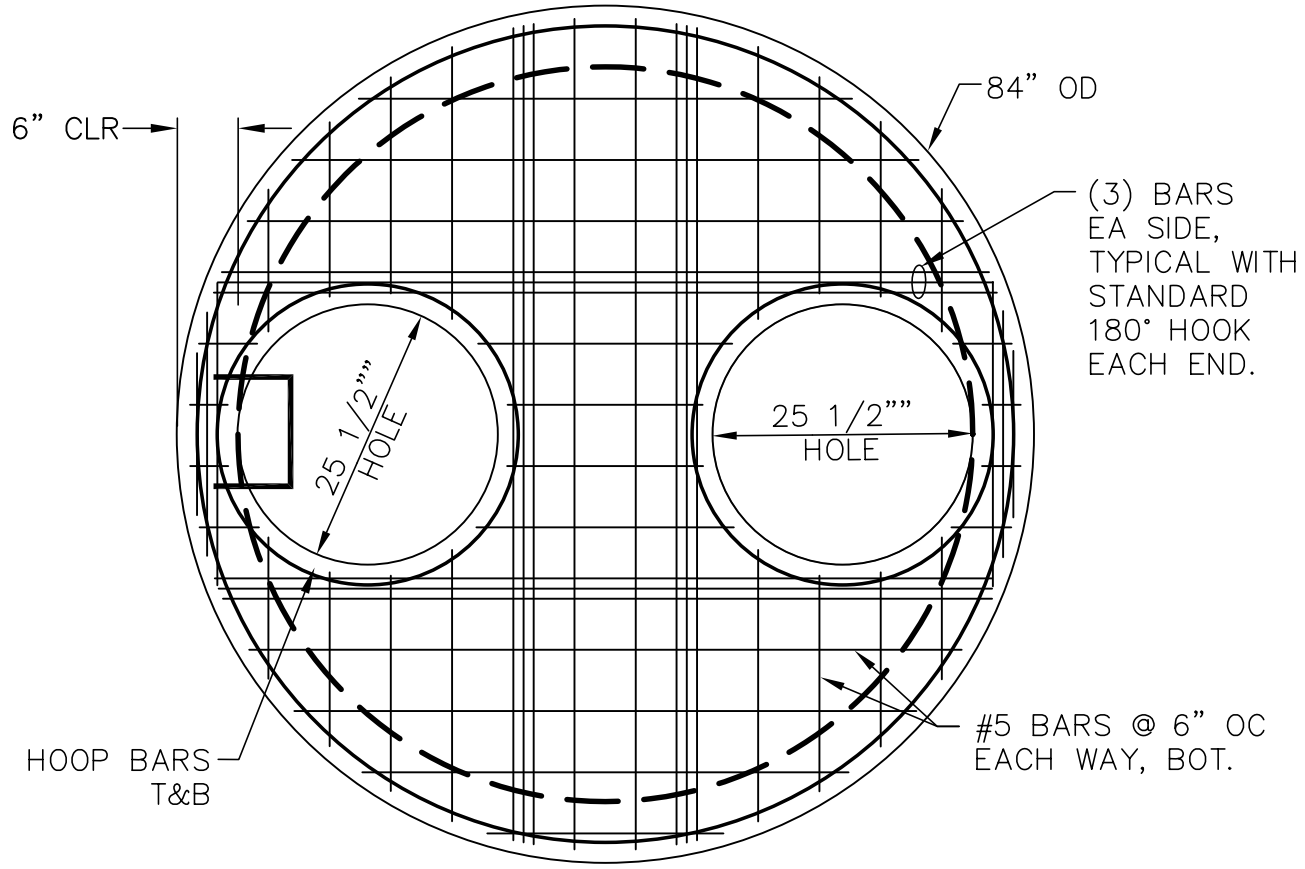

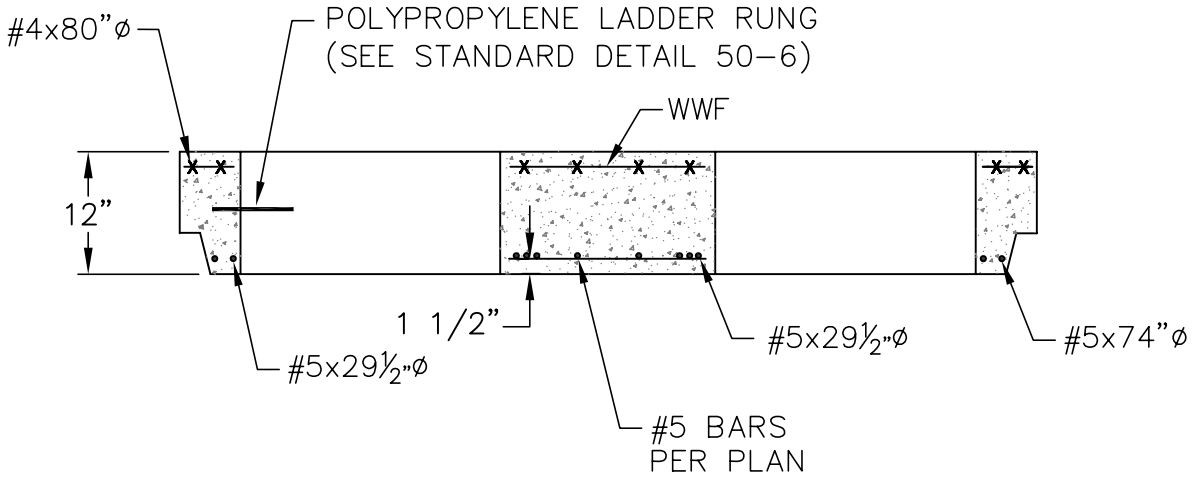

MUNICIPALITY OF ANCHORAGE	SCALE: NTS APPROVED: REVISED: 11/08	**PRECAST CONCRETE TWO HOLE REDUCING SLAB (72" TO TWO 25 1/2")**	SECTION # 55.05 DETAIL # 55–13

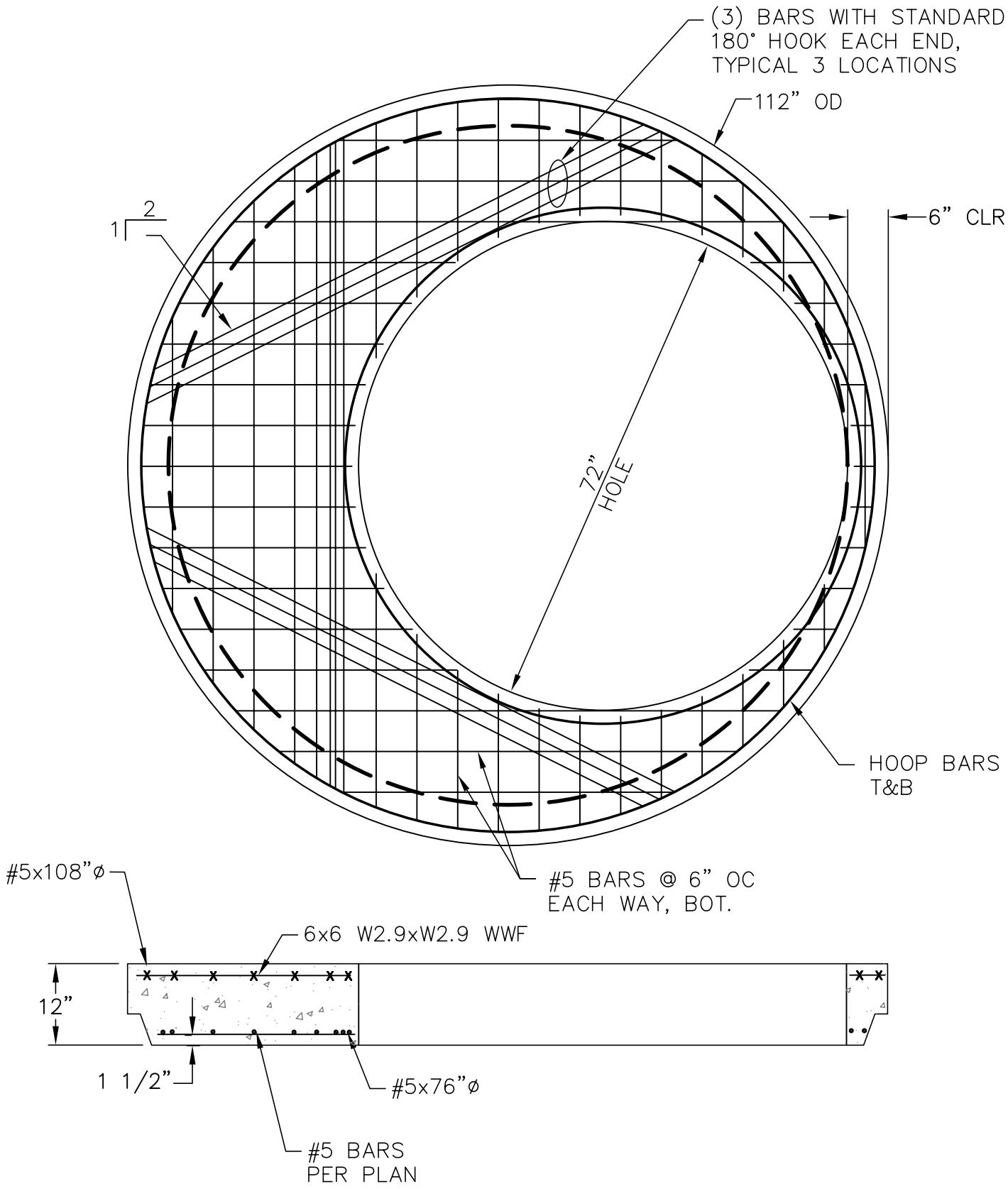

MUNICIPALITY OF ANCHORAGE	SCALE: NTS APPROVED: REVISED: 10/08	**PRECAST CONCRETE REDUCING SLAB (112" TO 72")**	SECTION # 55.05 DETAIL # 55–14

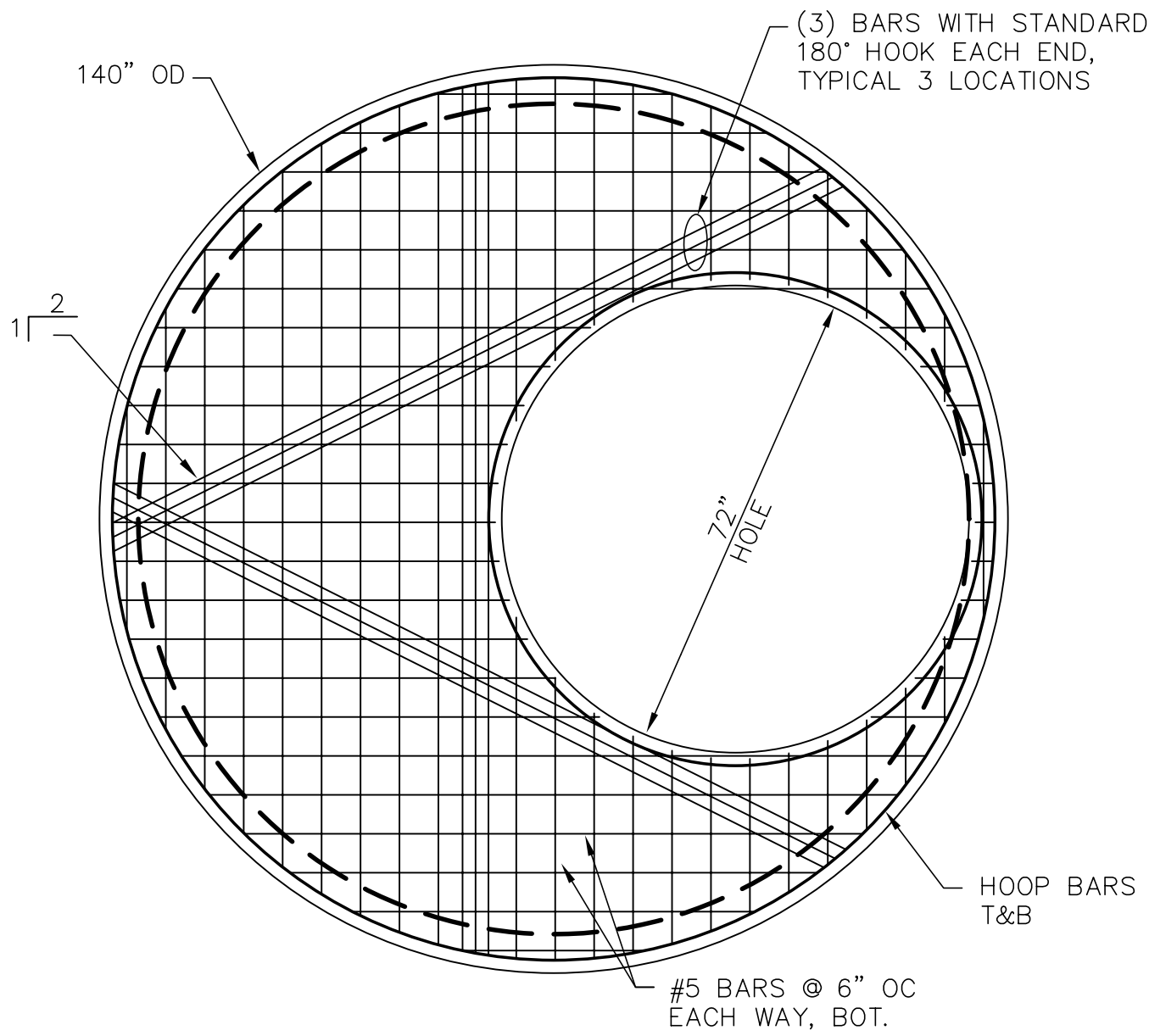

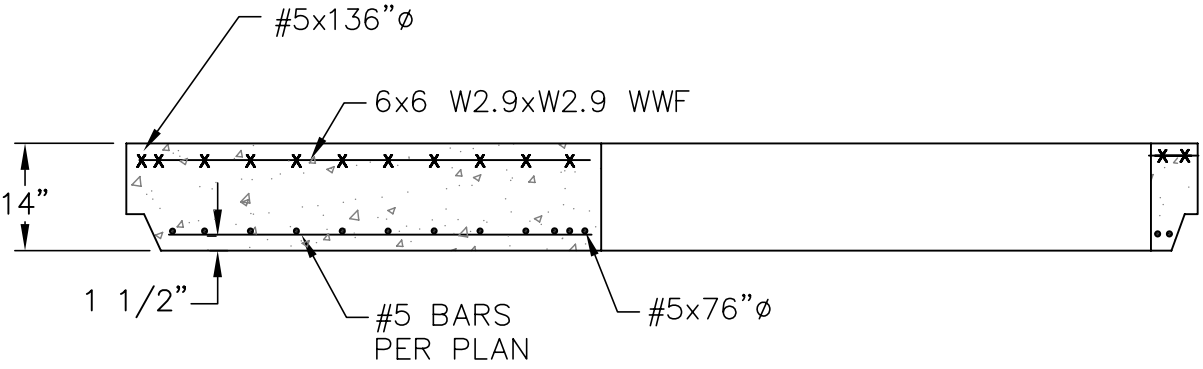

MUNICIPALITY OF ANCHORAGE	SCALE: NTS APPROVED: REVISED: 11/08	**PRECAST CONCRETE REDUCING SLAB (140" TO 72")**	SECTION # 55.05 DETAIL # 55–15

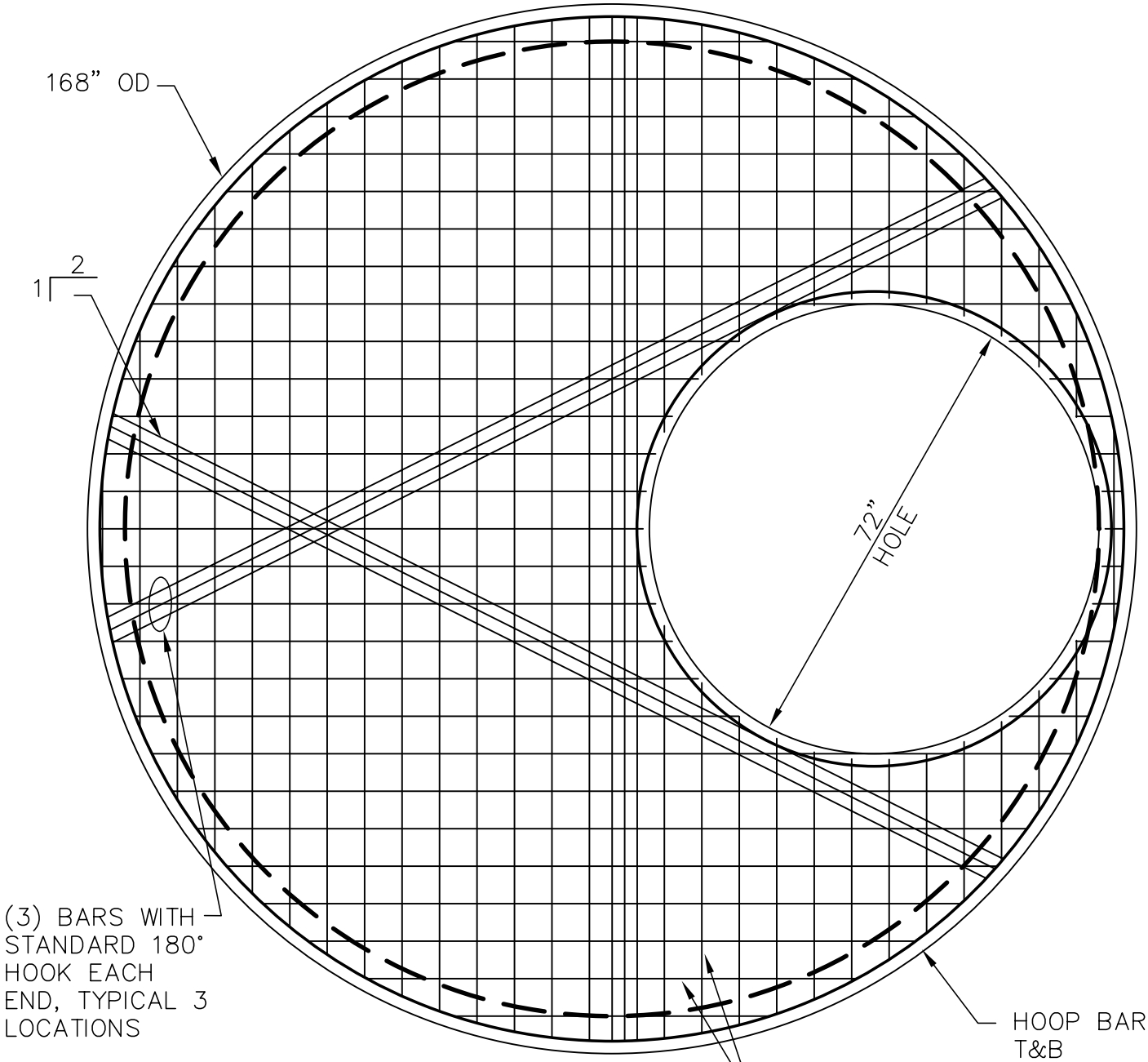

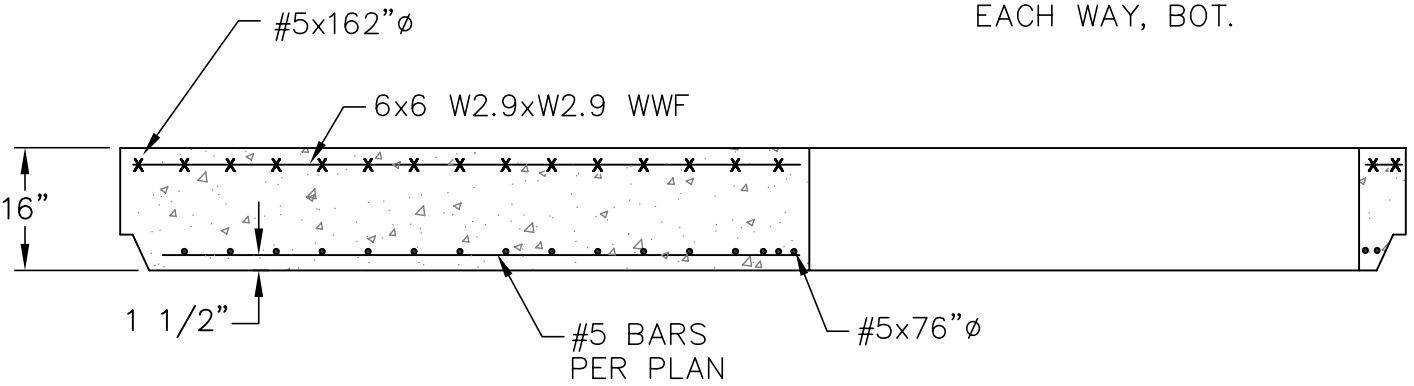

MUNICIPALITY OF ANCHORAGE	SCALE: NTS APPROVED: REVISED: 10/08	**PRECAST CONCRETE REDUCING SLAB (168" TO 72")**	SECTION # 55.05 DETAIL # 55–16

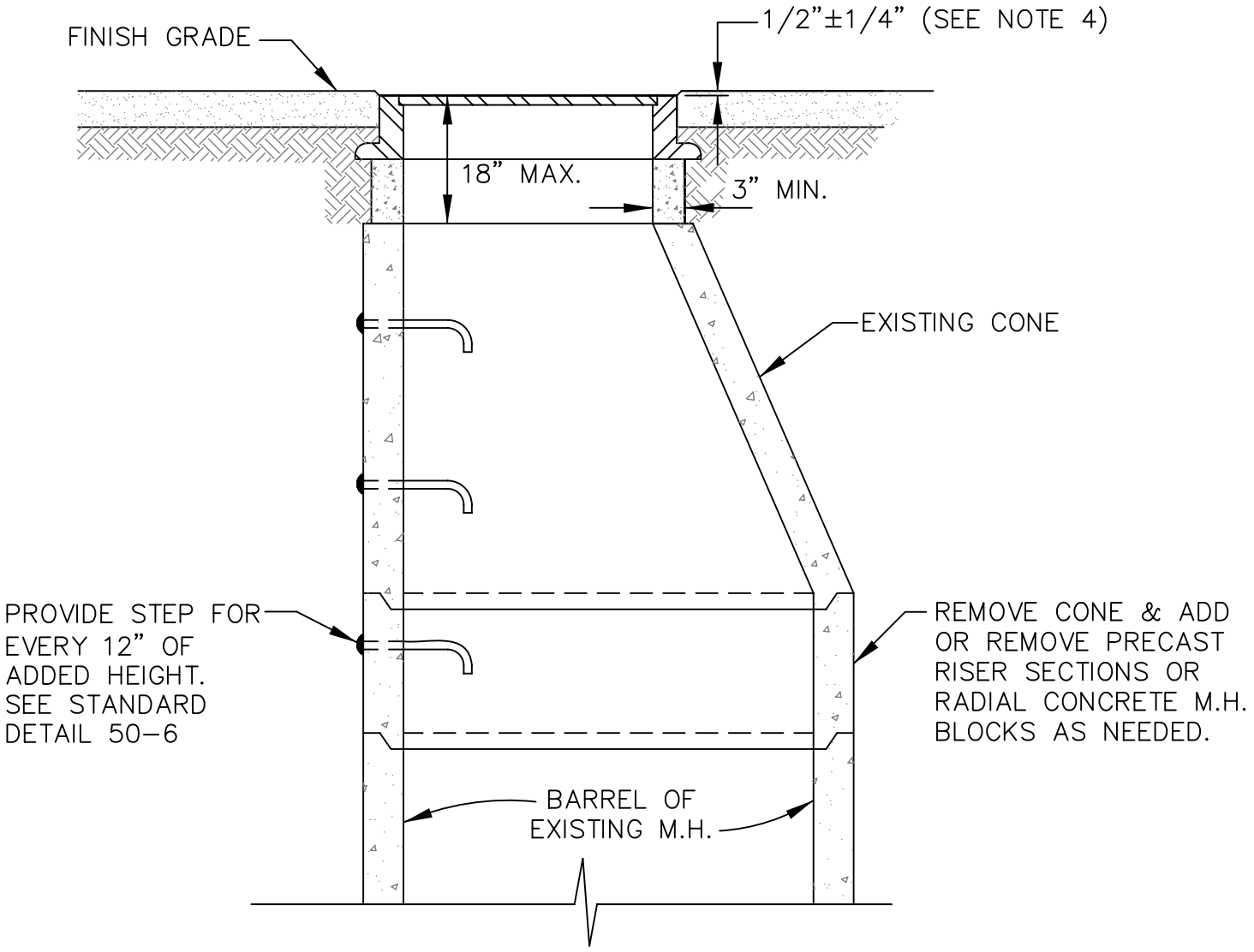

NOTES:

1. RESET CONCRETE GRADE RING IN BEDDING MATERIAL AS SPECIFIED IN SECTION 55.05, ARTICLE 5.2.B – REINFORCED CONCRETE MANHOLES.
2. REFER TO ASTM DESIGNATION C-478 FOR DESIGN AND STRENGTH REQUIREMENTS.
3. RESET CONE IN RAM-NEK OR EQUAL.
4. ADJUST FRAME TO A DEPTH OF 1/2"±1/4" BELOW SURFACE OF PAVEMENT. FEATHER EDGE OF PAVEMENT TO SMOOTH TRANSITION.

MUNICIPALITY OF ANCHORAGE	SCALE: NTS APPROVED: REVISED: 10/08	MANHOLE CONE ADJUSTMENT	SECTION # 55.07 DETAIL # 55-17

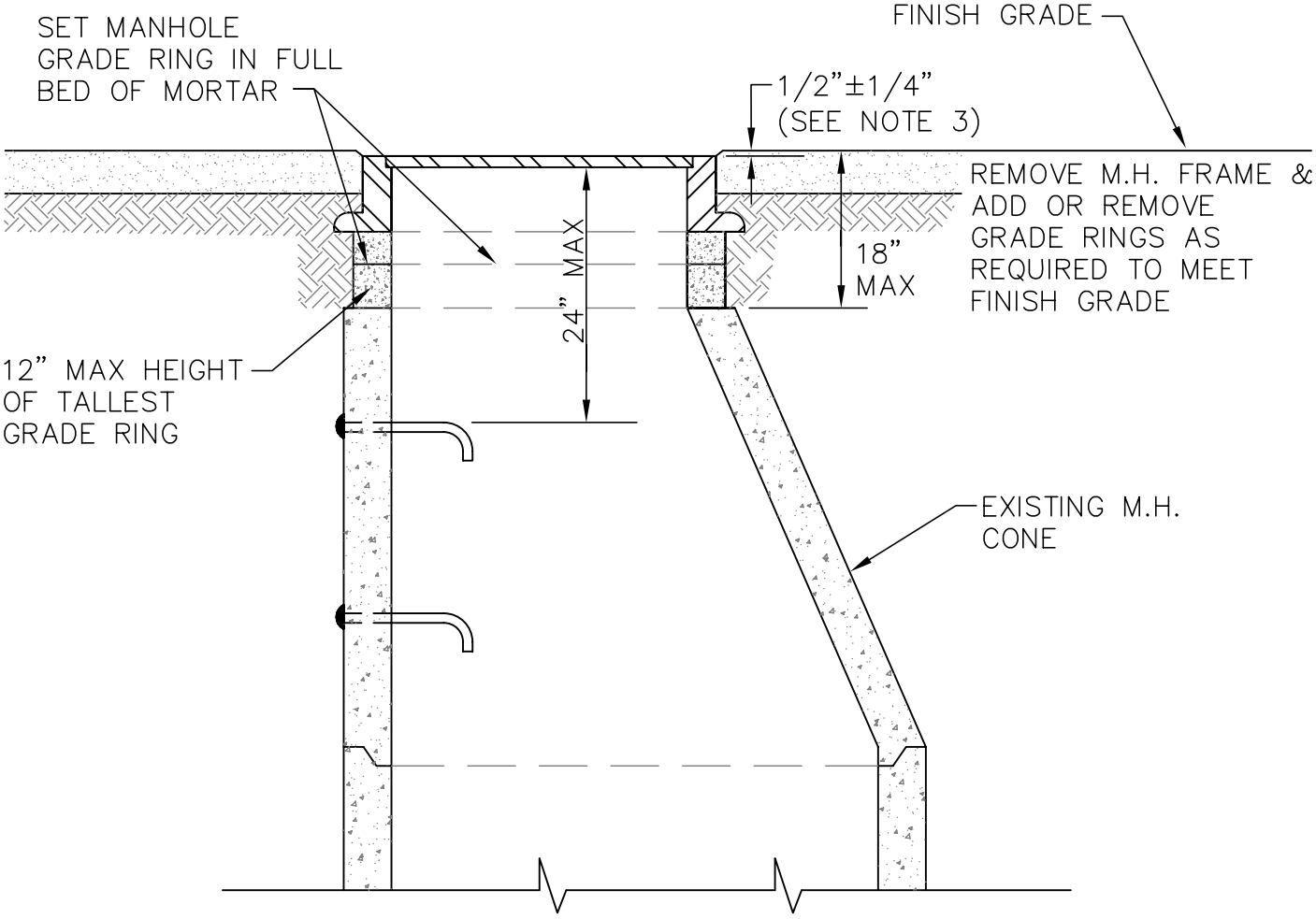

NOTES:

1. REFER TO ASTM DESIGNATION C-478 FOR DESIGN AND STRENGTH REQUIREMENTS.
2. WHEN AN ADJUSTMENT OF GREATER THAN 12" IN GRADE RINGS IS REQUIRED, ADJUST CONE I.A.W. STANDARD DETAIL 55-17 RATHER THAN GRADE RINGS.
3. IF NECESSARY, SHIM MANHOLE FRAME WITH STUD WASHERS, TO ADJUST FRAME TO A DEPTH OF 1/2"±1/4" BELOW SURFACE OF PAVEMENT. FEATHER EDGE OF PAVEMENT TO SMOOTH TRANSITION. WHEN SHIMS ARE USED, SET MANHOLE FRAME IN A FULL BED OF MORTAR WITH SHIMS.

MUNICIPALITY OF ANCHORAGE	SCALE: NTS APPROVED: REVISED: 10/08	MANHOLE RING ADJUSTMENT	SECTION # 55.08 DETAIL # 55-18

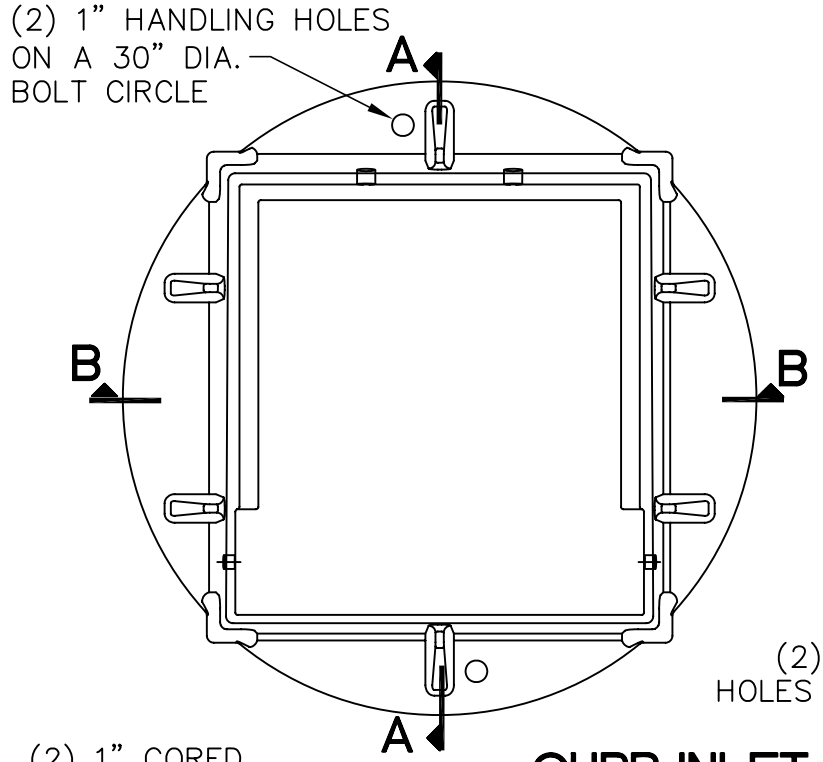

CURB INLET FRAME

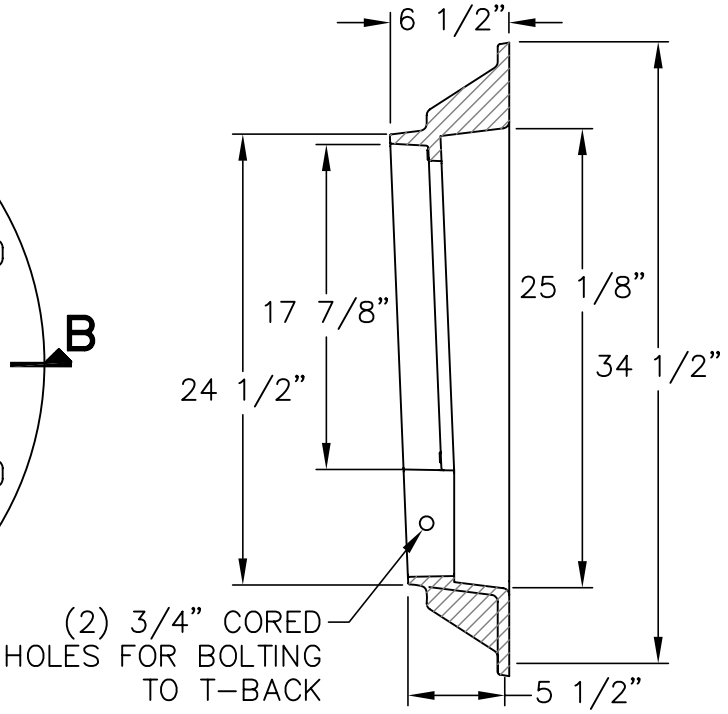

SECTION AA

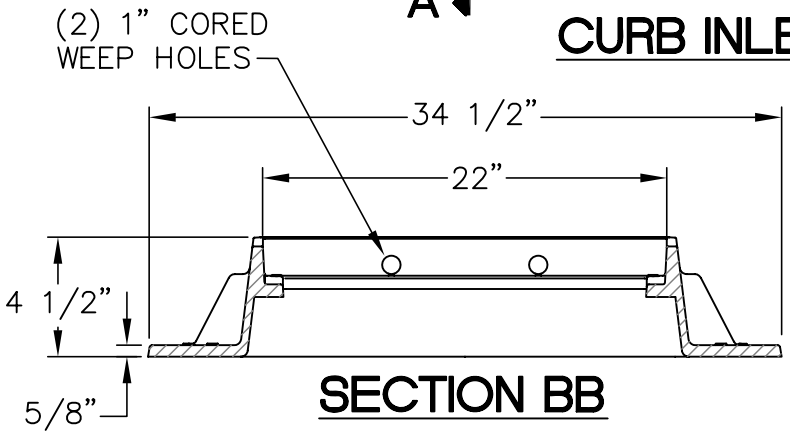

SECTION BB

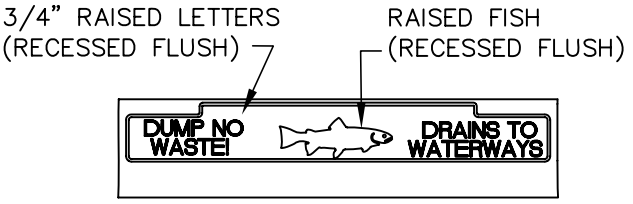

SECTION DD

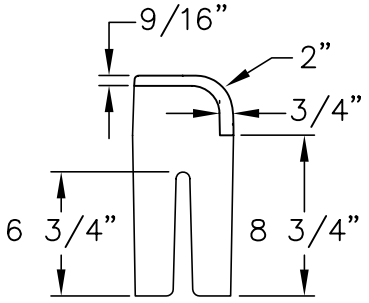

SECTION CC

CURB INLET HOOD

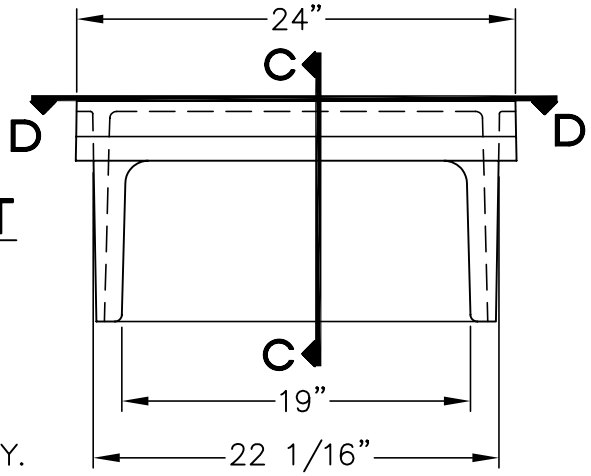

NOTES

THE NOTES FROM STANDARD DETAIL 55-20 APPLY.

MUNICIPALITY OF ANCHORAGE	SCALE: NTS APPROVED: REVISED: 10/08	**CATCH BASIN INLET FRAME AND HOOD FOR TYPE 1 CURB and GUTTER**	SECTION # 55.05,09 DETAIL # 55-19

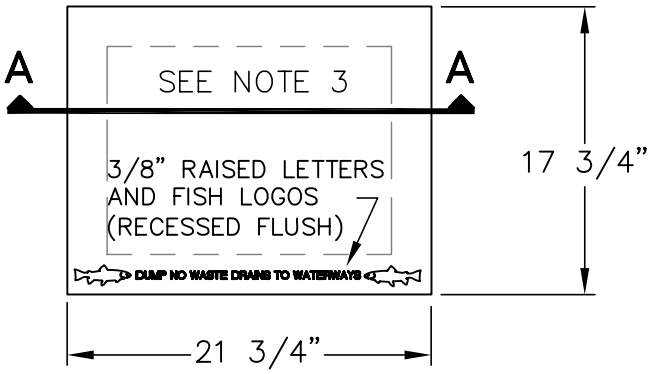

CURB INLET GRATE

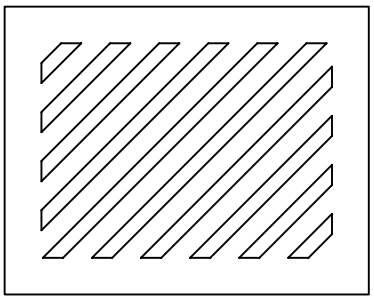

1" DIAGONAL BARS
WITH 1–1/2" OPENINGS

DIAGONAL GRATE

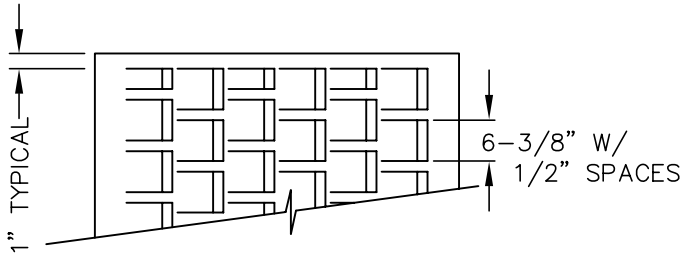

OFFSET VANE GRATE

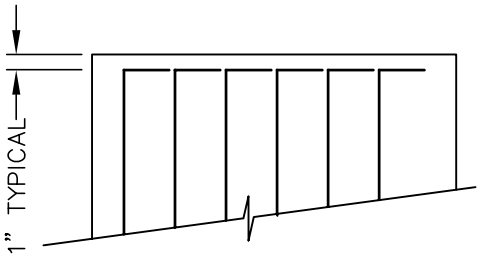

VANE GRATE

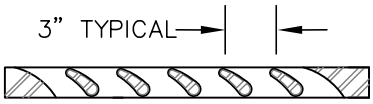

SECTION AA

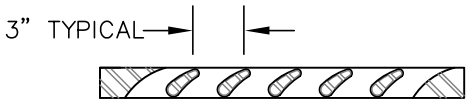

SECTION AA

NOTES:

1. MINIMUM CASTING WEIGHT SHALL BE 400 LBS. FOR CURB INLET FRAME, HOOD & GRATE.
2. CURB INLET HOOD & GRATE SHALL CONFORM TO ASTM A536.
3. GRATE SHALL BE AS SHOWN ON THE DRAWINGS OR SPECIFIED BY THE ENGINEER.

MUNICIPALITY OF ANCHORAGE	SCALE: NTS APPROVED: REVISED: 10/08	CATCH BASIN INLET GRATES FOR TYPE 1 CURB and GUTTER	SECTION # 55.05,09 DETAIL # 55–20

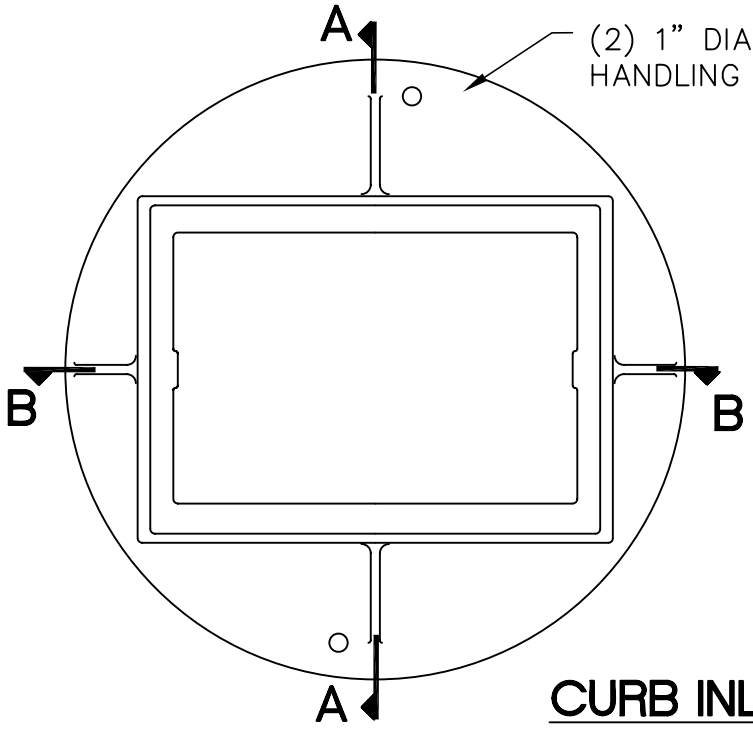

CURB INLET FRAME

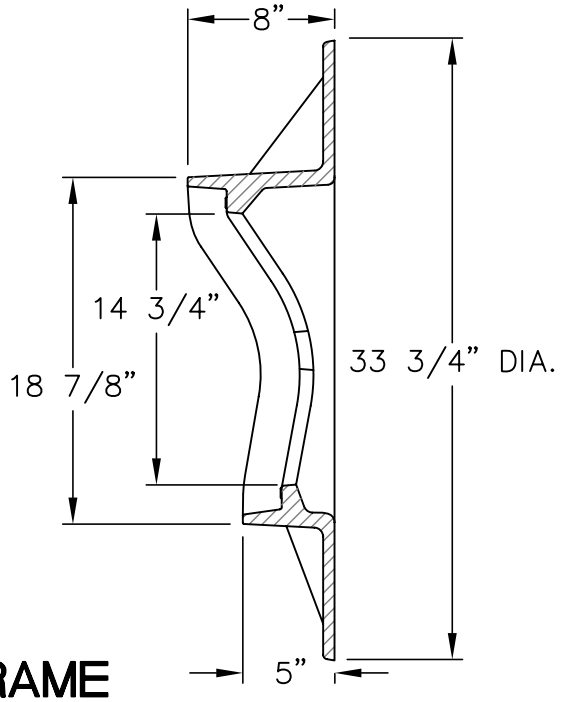

SECTION AA

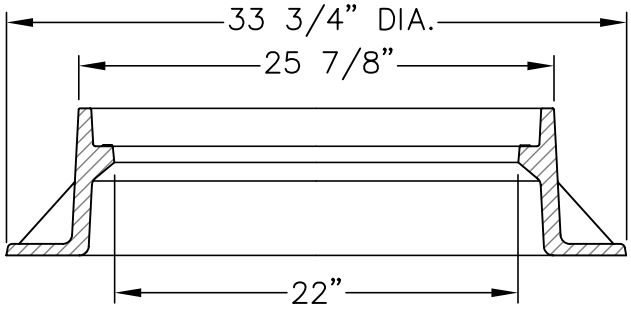

SECTION BB

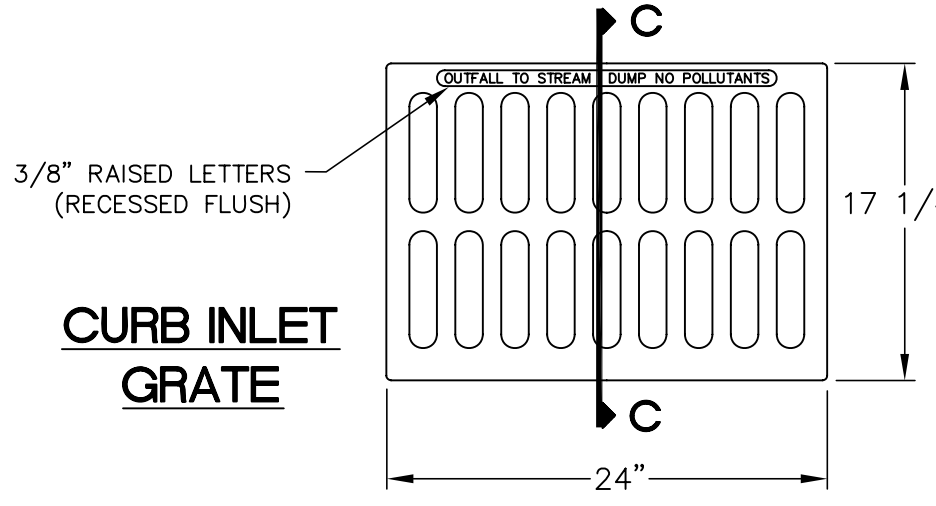

CURB INLET GRATE

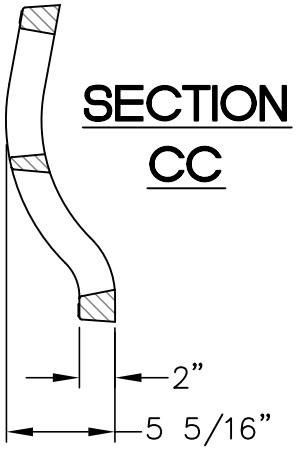

SECTION CC

MUNICIPALITY OF ANCHORAGE	SCALE: NTS APPROVED: REVISED: 10/08	CATCH BASIN INLET FOR TYPE 2 CURB and GUTTER	SECTION # 55.09 DETAIL # 55–21

CATCH BASIN INLET

- FOR TYPE I CURB & GUTTER SEE STANDARD DETAILS 55–19 AND 55–20
- FOR TYPE II CURB & GUTTER SEE STANDARD DETAIL 55–21

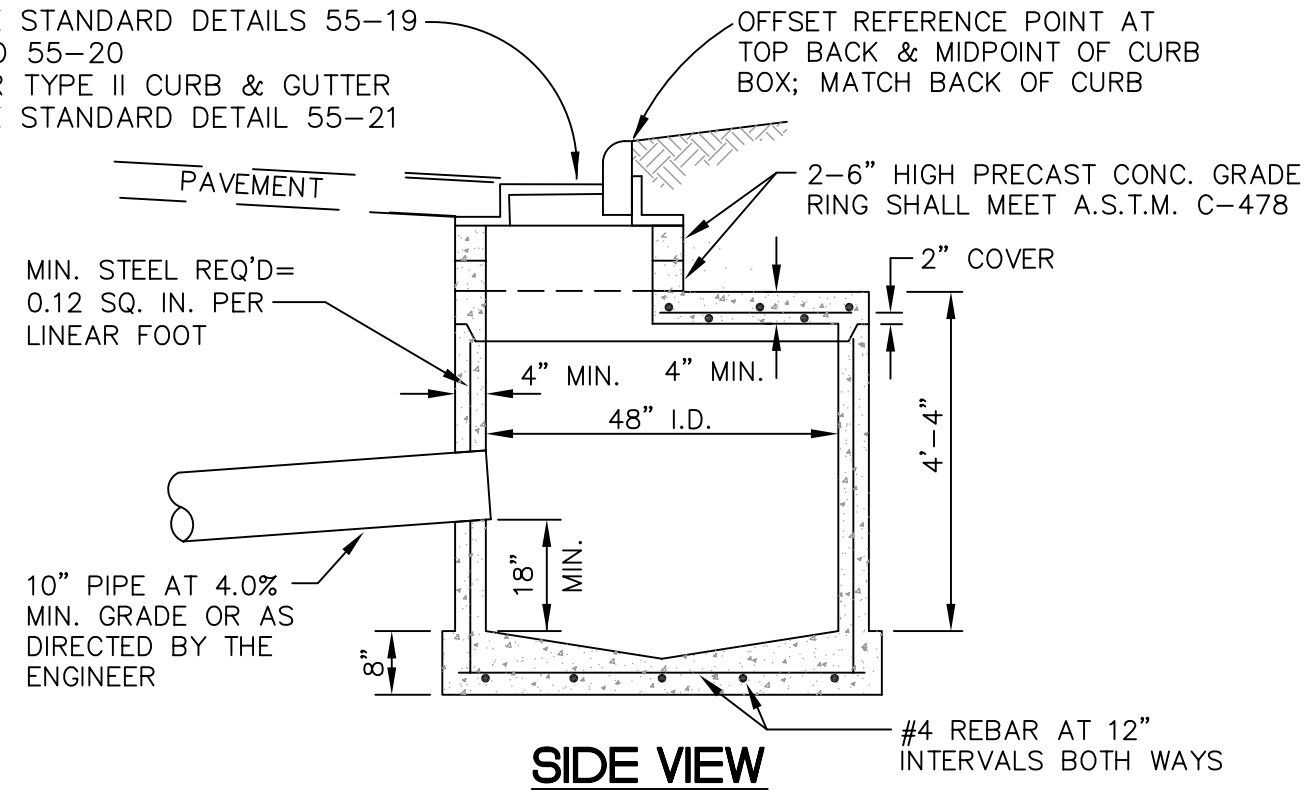

SIDE VIEW

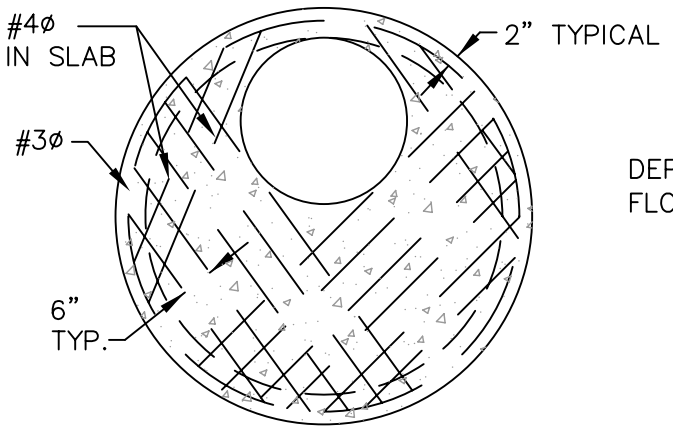

REDUCING SLAB

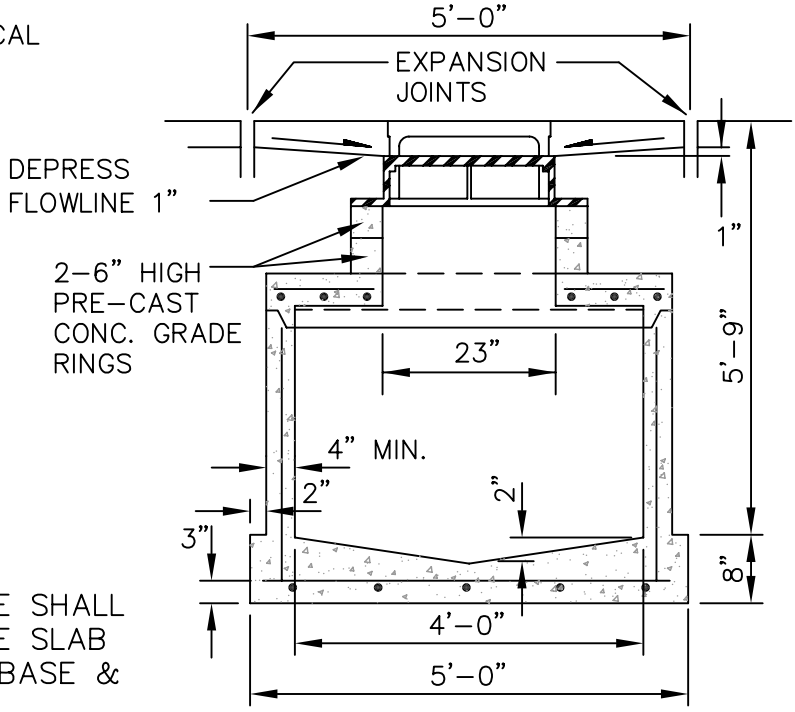

FRONT VIEW

NOTES:

1. COMPRESSIVE STRENGTH OF CONCRETE SHALL BE MINIMUM 4000 P.S.I., EXCEPT BASE SLAB WHICH MAY BE 3000 P.S.I. CONNECT BASE & BARREL WITH CONTINUOUS STEEL.
2. SEE ASTM C–478 FOR DESIGN REQUIREMENTS AND MINIMUM REINFORCING STEEL REQUIRED.
3. AT CATCH BASIN, DELETE CONCRETE GUTTER PAN, PAVE TO FACE OF CATCH BASIN INLET.

REVISION: 1/10 FIXED 5'9" DIMENSION TO TBC

MUNICIPALITY OF ANCHORAGE	SCALE: NTS APPROVED: REVISED: 1/10	PRECAST CATCH BASIN	SECTION # 55.09 DETAIL # 55–22

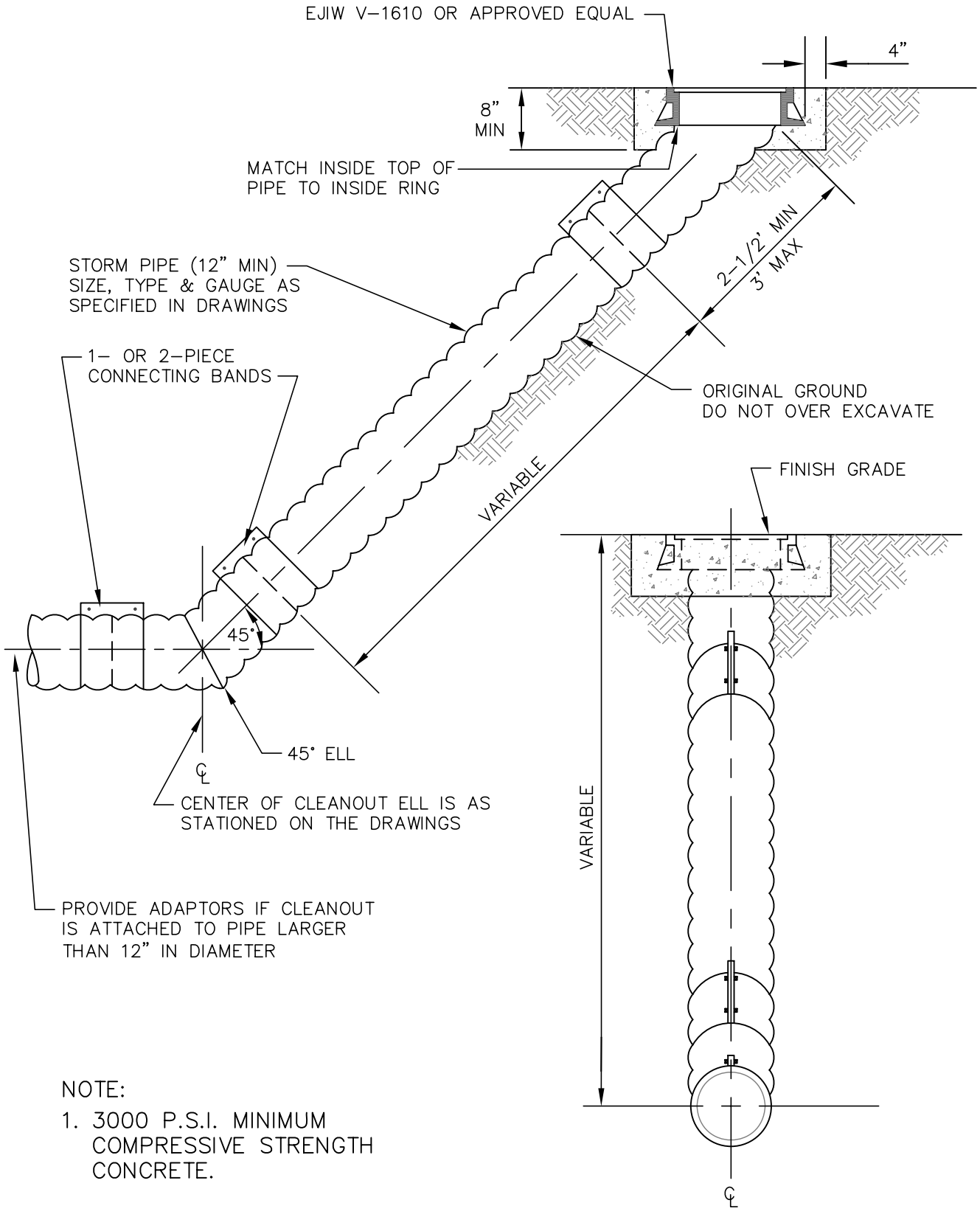

NOTE:

1. 3000 P.S.I. MINIMUM COMPRESSIVE STRENGTH CONCRETE.

MUNICIPALITY OF ANCHORAGE	SCALE: NTS APPROVED: REVISED: 10/08	**STORM DRAIN CLEANOUT**	SECTION # 55.14 DETAIL # 55-23

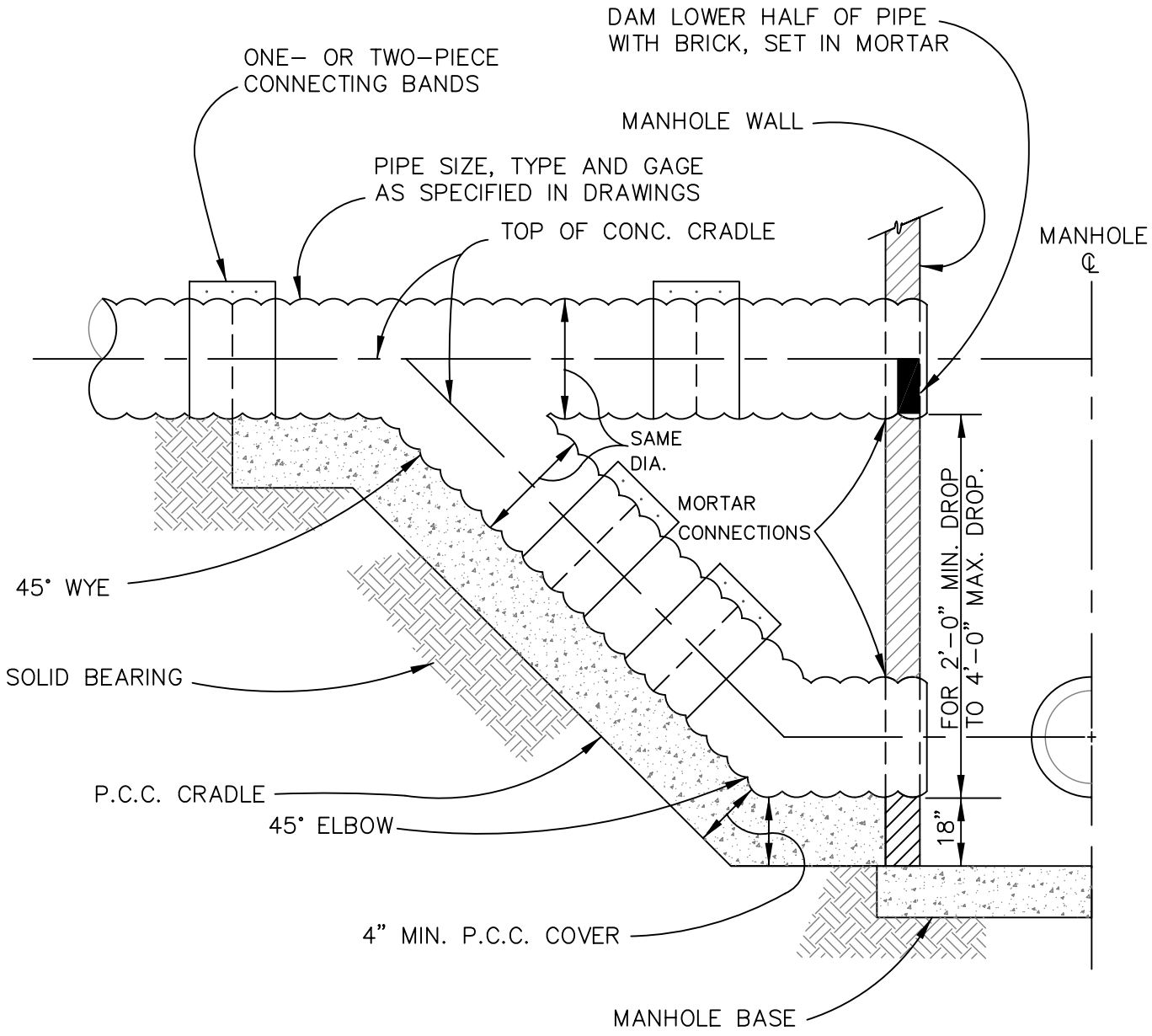

NOTES:

1. 3000 P.S.I. MIN. COMPRESSIVE STRENGTH CONCRETE FOR CRADLE.
2. PIPE SHALL PROTRUDE 2" INTO MANHOLE.

MUNICIPALITY OF ANCHORAGE	SCALE: NTS APPROVED: REVISED: 10/08	**STORM DRAIN DROP CONNECTION (2' MIN. DROP)**	SECTION # 55.16 DETAIL # 55–24

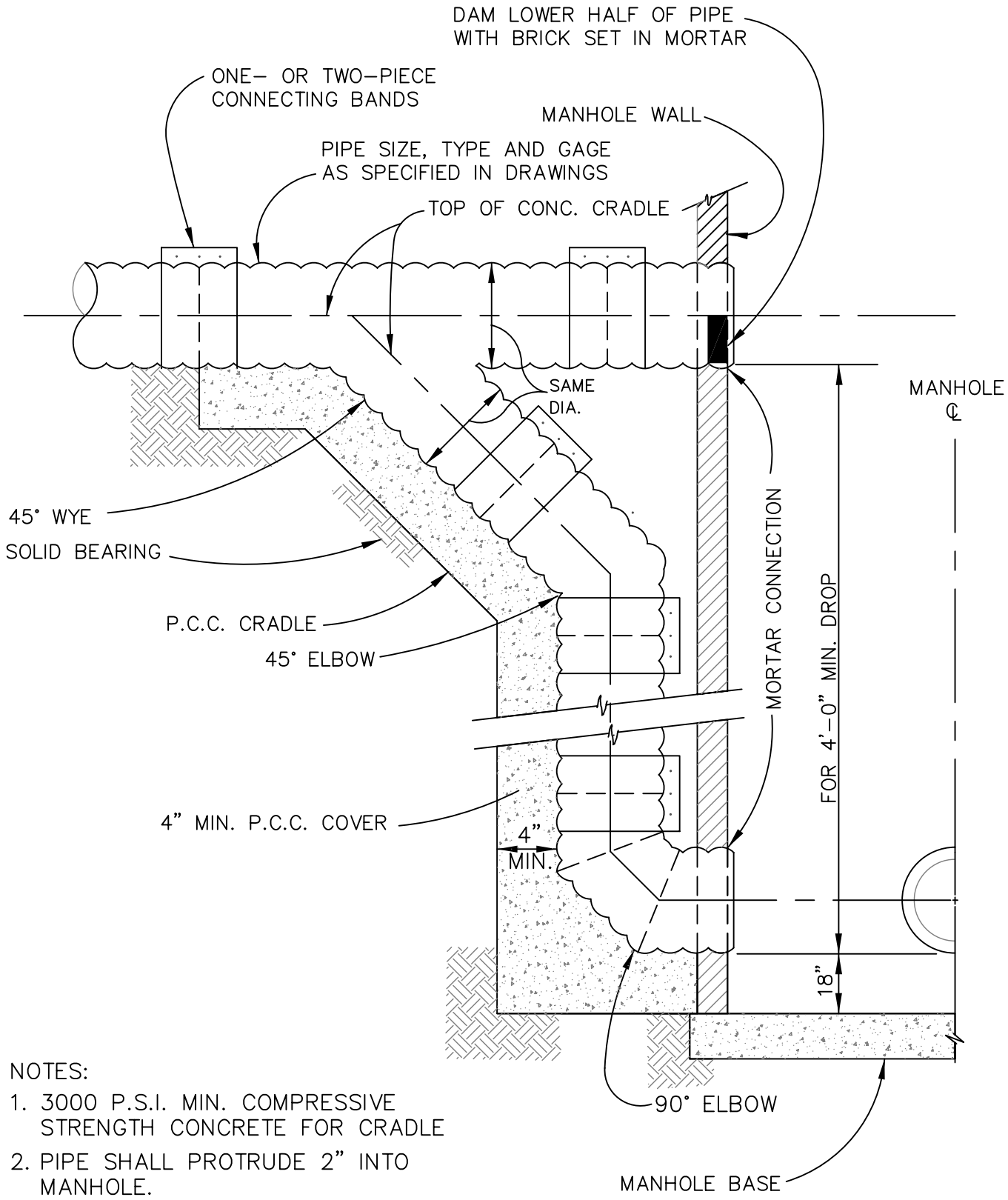

NOTES:

1. 3000 P.S.I. MIN. COMPRESSIVE STRENGTH CONCRETE FOR CRADLE
2. PIPE SHALL PROTRUDE 2" INTO MANHOLE.

MUNICIPALITY OF ANCHORAGE	SCALE: NTS APPROVED: REVISED: 10/08	**STORM DRAIN DROP CONNECTION (4' MIN. DROP)**	SECTION # 55.16 DETAIL # 55–25

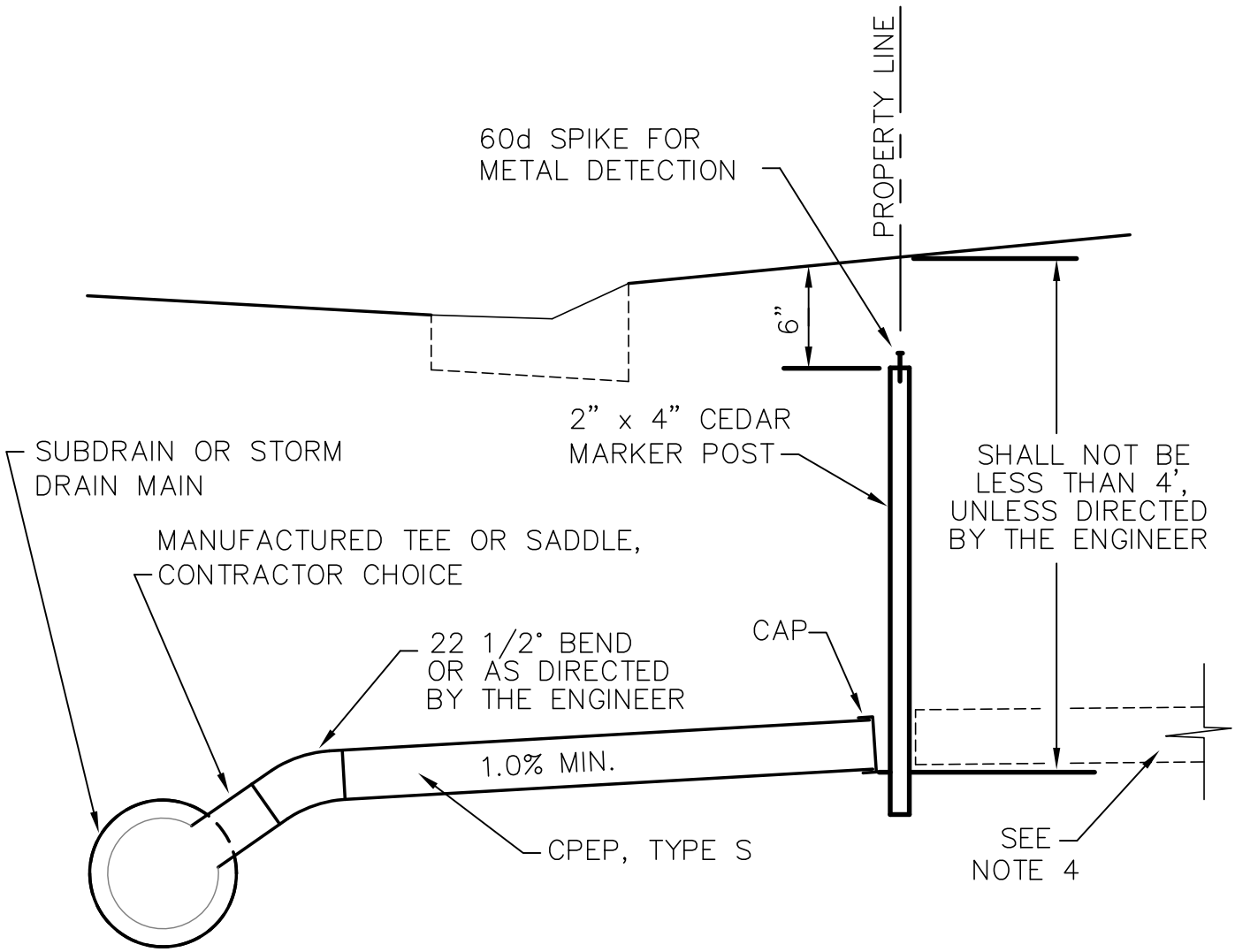

NOTES:

1. FINAL LOCATION OF THE FOOTING DRAIN SERVICE MAY BE ADJUSTED BY THE ENGINEER.
2. BACKFILL WITH TYPE II CLASSIFIED FILL AND BACKFILL WITHIN ROAD PRISM. BACKFILL WITH NATIVE MATERIAL BEHIND CURB.
3. WHEN FOOTING DRAIN CONNECTS DIRECTLY TO A MANHOLE, OMIT THE 22 1/2° BEND AND CONSTRUCT THE INVERT A MINIMUM OF 1' ABOVE THE DOWNSTREAM INVERT.
4. CONNECT TO ON-PROPERTY FOOTING DRAIN, WHEN PRESENT, AT PROPERTY LINE, AND OMIT MARKER POST. CONTRACTOR SHALL ADAPT AND PROVIDE BELL-REDUCER OR COUPLING CONNECTION TO EXISTING FOOTING DRAIN OF WHATEVER PIPE SIZE AND TYPE AND RESOLVE CONNECTION DETAILS WITH PROPERTY OWNER AND THE ENGINEER. CONNECTION TO EXISTING FOOTING DRAIN SHALL BE INCIDENTAL TO THIS PAY ITEM, AND NO ADDITIONAL PAYMENT SHALL BE MADE.

MUNICIPALITY OF ANCHORAGE	SCALE: NTS APPROVED: REVISED: 12/12	**FOOTING DRAIN SERVICE DETAIL**	SECTION # 55.18 DETAIL # 55-26

REVISION: 12/09 REMOVED 6" SPECIFICATION ON PIPE SIZE; 12/12 REMOVED 6" SPEC ON SADDLE

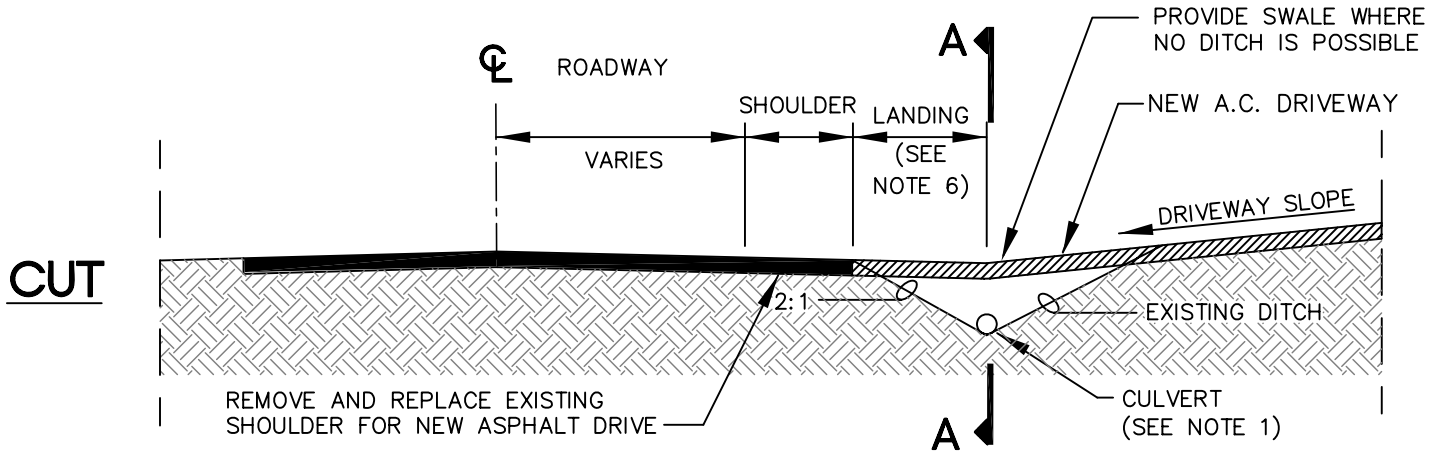

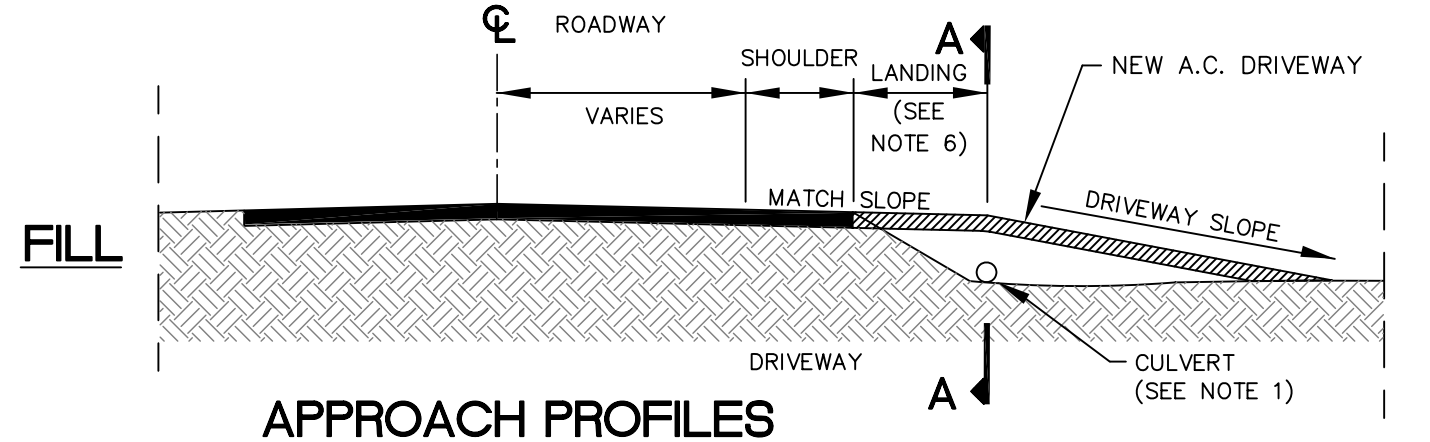

APPROACH PROFILES

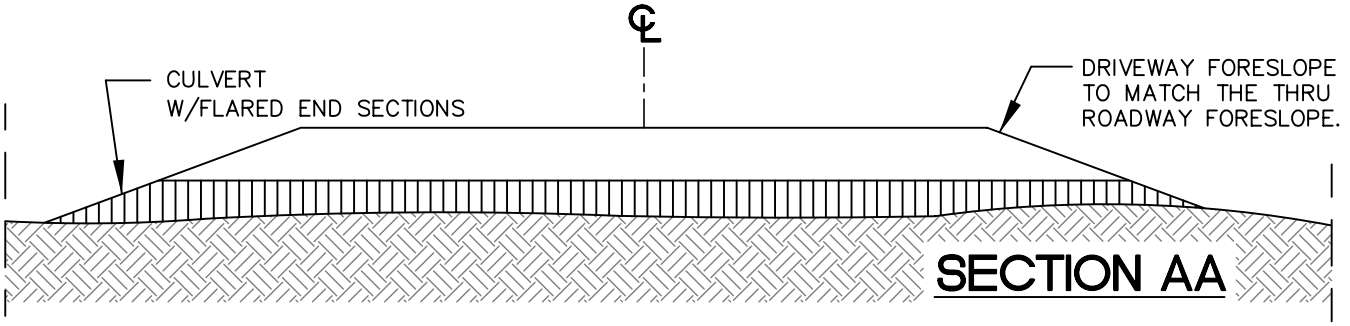

NOTES:

1. CULVERT DIAMETER IS MINIMUM 18" OR AS SPECIFIED IN THE DRAWINGS.
2. CULVERT INVERTS SHALL MATCH BOTTOM OF DITCH PROFILE. CONTRACTOR SHALL GRADE DITCH ON BOTH ENDS OF CULVERT PRIOR TO INSTALLATION TO ENSURE POSITIVE DRAINAGE.
3. DRIVEWAY CULVERTS SHALL HAVE A MINIMUM 12" COVER FROM BOTTOM OF A.C. PAVEMENT TO TOP OF PIPE.
4. CULVERT SHALL BE BEDDED IN MINIMUM 6" CLASS "C" BEDDING MATERIAL. BACKFILL SHALL BE TYPE II–A CLASSIFIED FILL & BACKFILL COMPACTED TO 95% OF MAXIMUM DENSITY. BACKFILL AND BEDDING ARE INCIDENTAL TO COST OF CULVERT INSTALLATION.
5. CULVERT END SECTIONS SHALL BE FLARED AND ARE INCIDENTAL TO CULVERT INSTALLATION.
6. LANDING AREA MAXIMUM SLOPE ±2%. RESIDENTIAL DRIVEWAY, 10' MINIMUM. COMMERCIAL/INDUSTRIAL DRIVEWAY, 20' MINIMUM.

MUNICIPALITY OF ANCHORAGE	SCALE: NTS APPROVED: REVISED: 10/08	DRIVEWAY CULVERT DETAILS	SECTION # 55.21 DETAIL # 55–27

MUNICIPALITY OF ANCHORAGE
STANDARD SPECIFICATIONS

DIVISION 60
WATER SYSTEMS

STANDARD CONSTRUCTION SPECIFICATIONS
FOR WATER SYSTEMS
DIVISION 60
INDEX

SECTION 60.01	GENERAL	1
Article 1.1	Scope of Work	1
Article 1.2	Applicable Standards	1
Article 1.3	Survey	3
Article 1.4	Pipe Insulation	3
Article 1.5	Payment - General	3
SECTION 60.02	FURNISH AND INSTALL PIPE	4
Article 2.1	General	4
Article 2.2	Material	4
Article 2.3	Construction	7
Article 2.4	Flushing and Testing	10
Article 2.5	Measurement	15
Article 2.6	Basis of Payment	15
SECTION 60.03	FURNISH AND INSTALL VALVES	17
Article 3.1	General	17
Article 3.2	Material	17
Article 3.3	Construction	19
Article 3.4	Measurement	20
Article 3.5	Basis of Payment	20
SECTION 60.04	FURNISH AND INSTALL FIRE HYDRANTS	21
Article 4.1	General	21
Article 4.2	Materials	21
Article 4.3	Construction	22
Article 4.4	Measurement	23
Article 4.5	Basis of Payment	24
SECTION 60.05	FIRE LINES	25
Article 5.1	General	25
Article 5.2	Material	25
Article 5.3	Construction	25
Article 5.4	Fire Hydrants, Valves and Valve Boxes	26
Article 5.5	Flushing and Testing	26
Article 5.6	Measurement	26
Article 5.7	Basis of Payment	26

SECTION 60.06 WATER SERVICE LINES 27
Article 6.1 General 27
Article 6.2 Material 27
Article 6.3 Construction 28
Article 6.4 Measurement 31
Article 6.5 Basis of Payment 31

SECTION 60.07 POLYETHYLENE ENCASEMENT 32
Article 7.1 General 32
Article 7.2 Material 32
Article 7.3 Construction 32
Article 7.4 Measurement 33
Article 7.5 Basis of Payment 33

SECTION 60.08 TEMPORARY WATER SYSTEMS 34
Article 8.1 General 34
Article 8.2 Material 34
Article 8.3 Construction 35
Article 8.4 Measurement 36
Article 8.5 Basis of Payment 36

SECTION 60.09 REPLACE VALVE BOX 37
Article 9.1 General 37
Article 9.2 Material 37
Article 9.3 Construction 37
Article 9.4 Measurement 37
Article 9.5 Basis of Payment 37

SECTION 60.10 RESET VALVE BOX SECTIONS BELOW FINISHED GRADE 38
Article 10.1 General 38
Article 10.2 Material 38
Article 10.3 Construction 38
Article 10.4 Measurement 38
Article 10.5 Basis of Payment 38

SECTION 60.11 REPLACE TOP SECTION OF VALVE BOX 39
Article 11.1 General 39
Article 11.2 Material 39
Article 11.3 Construction 39
Article 11.4 Measurement 40
Article 11.5 Basis of Payment 40

SECTION 60.12 ABANDON PIPELINE IN PLACE 41
Article 12.1 General 41
Article 12.2 Material 41
Article 12.3 Construction 41
Article 12.4 Measurement 41
Article 12.5 Basis of Payment 42

SECTION 60.13 CONNECT TO EXISTING WATER SYSTEM 43
Article 13.1 General 43
Article 13.2 Material 43
Article 13.3 Construction 43
Article 13.4 Measurement 44
Article 13.5 Basis of Payment 44

SECTION 60.14 REMOVE AND SALVAGE EXISTING FIRE HYDRANT 45
Article 14.1 General 45
Article 14.2 Material 45
Article 14.3 Construction 45
Article 14.4 Measurement 46
Article 14.5 Basis of Payment 46

SECTION 60.15 RELOCATE WATER MAIN 47
Article 15.1 General 47
Article 15.2 Construction 47
Article 15.3 Measurement 47
Article 15.4 Basis of Payment 48

SECTION 60.16 RAISE OR LOWER WATER SERVICE 49
Article 16.1 General 49
Article 16.2 Materials 49
Article 16.3 Construction 49
Article 16.4 Measurement 49
Article 16.5 Basis of Payment 50

SECTION 60.17 FURNISH AND INSTALL GALVANIC ANODES 51
Article 17.1 General 51
Article 17.2 Definitions 51
Article 17.3 Materials 51
Article 17.4 Installation 52
Article 17.5 Measurement 53
Article 17.6 Basis of Payment 53

SECTION 60.18 ABANDON PRIVATE WATER WELL 54
Article 18.1 Description 54
Article 18.2 Materials and Construction 54
Article 18.3 Measurement 55
Article 18.4 Basis of Payment 56

SECTION 60.19 ADJUST KEY BOX 57
Article 19.1 General 57
Article 19.2 Material 57
Article 19.3 Construction 57
Article 19.4 Measurement 57

SECTION 60.20 ADJUST VALVE BOX TO FINISH GRADE 59
Article 20.1 General 59
Article 20.2 Material 59
Article 20.3 Construction 59
Article 20.4 Measurement 59
Article 20.5 Basis of Payment 59

STANDARD CONSTRUCTION SPECIFICATIONS
FOR WATER SYSTEMS
DIVISION 60

SECTION 60.01 GENERAL

Article 1.1 Scope of Work

The Work covered by these Specifications consists of providing all plant, labor, equipment, supplies, material, transportation, handling and storage, and performing all operations necessary to complete the construction of all water facilities that will be distributing water by the Anchorage Water and Wastewater Utility (AWWU). Requirements for earthwork including trench excavation and backfill are specified in Division 20 - Earthwork.

Article 1.2 Applicable Standards

The most recent revision of the following standards are hereby made a part of these Specifications:

AASHTO M306	Standard Specification for Drainage, Sewer, Utility, and Related Castings
ASTM A126	Specification for Gray Iron Castings for Valves, Flanges and Pipe Fittings
ASTM B88	Specification for Seamless Copper Water Tubing
ASTM D256	Test Methods for D-C Resistance of Plastics and Electrical Insulating Materials
ASTM D3035	Specification for Polyethylene (PE) Plastic Pipe (SDR-PR) Based on Controlled Outside Diameter
ASTM D3261	Specification for Butt Heat Fusion Polyethylene (PE) Plastic Fittings for Polyethylene (PE) Plastic Pipe and Tubing
ASTM D3350	Specification for Polyethylene Plastic Pipe and Fittings Materials
ASTM F4777	Standard Specification for Elastomeric Seals (Gaskets) for Joining Plastic Pipe
AASHTO M45	Sand for Cement Mortar
AWWA A100	Water Wells
AWWA C104/ ANSI A21.4	Cement-Mortar Lining for Ductile-Iron Pipe and Fittings for Water
AWWA C105/ ANSI A21.5	Polyethylene Encasement for Ductile Iron Piping for Water and Other Liquids
AWWA C110/ ANSI A21.10	Ductile-Iron and Gray-Iron Fittings, 3 in. through 48 in., for Water and Other Liquids
AWWA C111/ ANSI A21.11	Rubber-Gasket Joints for Ductile-Iron and Gray-Iron Pressure Pipe and Fittings

AWWA C115/ ANSI A21.15	Flanged Ductile-Iron Pipe with Threaded Flanges
AWWA C151/ ANSI A21.51	Ductile-Iron Pipe, Centrifugally Cast in Metal Molds or Sand-Lined Molds, for Water or Other Liquids
AWWA C303	Reinforced Concrete Pressure Pipe, Steel Cylinder Type, Pre-Tensioned, for Water and Other Liquids
AWWA C500	Gate Valves for Water and Sewerage Systems
ANSI/ AWWA C502	Dry-Barrel Fire Hydrants
ANSI/ AWWA C504	Rubber-Seated Butterfly Valves
AWWA C509	Resilient-Seated Gate Valves for Water Supply Service
AWWA C515	Reduced-Wall, Resilient-Seated Gate Valves for Water Supply Service
ANSI/ AWWA C600	Installation of Ductile-Iron Water Mains and Their Appurtenances
ANSI/ AWWA-C605	Underground Installation of Polyvinyl Chloride (PVC) Pressure Pipe and Fittings for water.
AWWA C651	Disinfecting Water Mains
ANSI/ AWWA C652	Disinfection of Water Storage Facilities
ANSI/ AWWA C800	Underground Service Line Valves and Fittings
AWWA C901	Standard for Polyethylene (PE) Pressure Pipe and Tubing, 1/2 in. through 3 in., for Water Service
AWWA C900	Polyvinyl Chloride (PVC) Pressure Pipe and Fabricated Fittings, 4 inch through 12 inch for Water Transmission and Distribution
AWWA C905	Polyvinyl Chloride (PVC) Pressure Pipe and Fabricated Fittings, 14 inch through 48 inch for Water Transmission and Distribution
ANSI/ AWWA D100	Welded Steel Tanks for Water Storage
ANSI/ AWWA D102	Coating Steel Water-Storage Tanks
SSPC-SP	Steel Structures Painting Council Surface Preparation Specifications
SSPC-PA	Steel Structures Painting Council Paint Application Specifications

NSF (Standard 61)	Drinking Water System Components – Health Effects
UBC	Uniform Building Code, latest edition adopted by MOA and current local amendments
IBC	International Building Code, latest edition adopted by MOA and current local amendments
UFC	Uniform Fire Code, latest edition adopted by MOA and current local amendments
IFC	International Fire Code, latest edition adopted by MOA and current local amendments
UMC	Uniform Mechanical Code, latest edition adopted by MOA and current local amendments
IMC	International Mechanical Code, latest edition adopted by MOA and current local amendments
UPC	Uniform Plumbing Code, latest edition adopted by MOA and current local amendments
NEC	National Electrical Code, latest edition adopted by MOA and current local amendments
NFPA	Other National Fire Protection Association Standards, latest edition adopted by MOA and current local amendments

Article 1.3 Survey

Survey shall be performed by the Contractor per Division 65 - Construction Survey.

Article 1.4 Pipe Insulation

Rigid board insulation required for frost protection of water mains and services shall be as specified on the drawings or in the special provisions and comply with Division 20, Section 20.26 – Insulation.

Article 1.5 Payment - General

Payment for all Work included in this Division shall be paid for in accordance with Division 10, Section 10.07 - Measurement and Payment, and shall include full payment for all Work described.

SECTION 60.02 FURNISH AND INSTALL PIPE

Article 2.1 General

The Work under this Section consists of the performance of all Work required for furnishing and installing a water distribution system in accordance with applicable standards. The water distribution system may consist of, but not limited to, NSF 61 certified water pipe, fittings, and bolts, coatings, conductivity straps and thrust restraint. The Contractor shall install piping systems in accordance with these Specifications and manufacturer's recommendations, and in conformity with the lines and grades as shown on the Drawings, unless otherwise approved.

Article 2.2 Material

A. Ductile Iron Pipe

Ductile Iron Pipe must conform to the requirements of AWWA C151, with cement mortar lining conforming to the requirements of AWWA C104/ANSI A24.1. Class 52 pipe shall be used for all water pipe unless otherwise specified.

B. Polyvinyl Chloride Pipe

Four inch (4") through twelve inch (12") Polyvinyl Chloride Pipe must conform to the requirements of AWWA C900 and as otherwise required by the Contract Documents. DR 18 pipe must be used for C900 PVC pipe, unless otherwise specified.

Fourteen inch (14") through forty-eight inch (48") Polyvinyl Chloride Pipe must conform to the requirements of AWWA C905 and as otherwise required by the Contract Documents. DR 21 must be used for C905 PVC pipe, unless otherwise specified.

All PVC pipe must be blue in color. PVC water main and service connections must be installed with a bell protection device such as the EBAA Mega Stop Series 5000 or equal.

E. High Density Polyethylene Pipe

High Density Polyethylene Pipe (HDPE) and fittings shall be manufactured in accordance with AWWA C906. HDPE shall be manufactured from PE4710 polyethylene compounds that meet or exceed ASTM D3350 Cell Classification 445574. HDPE pipe and fitting material compound shall contain color and ultraviolet (UV) stabilizer meeting or exceeding the requirements of Code C per ASTM D3350. Electrofusion fittings shall comply with ASTM F1055. All fittings shall have pressure class ratings not less than the pressure class rating of the pipe to which they are joined.

F. Copper Service Pipe

Copper pipe must be soft-drawn Type K, seamless, annealed, polyethylene coated (minimum 26 mil), copper pipe, suitable for use as underground service water connections for general plumbing purposes, and ASTM B88 compliant. Damage to the polyethylene coating must be repaired with denso paste and tape or equal.

G. Concrete Cylinder Pipe

Concrete Cylinder Pipe shall conform to the requirements of AWWA C303 and as otherwise required by the Contract Documents.

H. Fittings and Gaskets

Fittings, except for the bell protection devices, are to have exterior and interior surfaces coated with fusion bonded epoxy in accordance with AWWA C116/A21.13-09.

Unless otherwise indicated on the Drawings, rubber gaskets for ductile iron pipe joints shall conform to AWWA C111 and rubber gaskets for PVC pipe joints shall conform to ASTM F477. Fittings shall be a minimum of 250 pounds pressure rating, mechanical joint or bell, lined or unlined, either cast iron or ductile iron, unless otherwise required by the Contract Documents. All fittings must conform to the requirements of AWWA C110/ANSI A21.10 or C153 A21.53-06.

Fittings must utilize carbon steel or stainless steel nuts and bolts. Fittings with carbon steel bolts and nuts must conform to the dimensional and material standards as outlined in AWWA C111 and C115 and be factory-coated with a blue fluoropolymer coating system. Fittings with stainless steel bolts and nuts must conform to the dimensional standards as outlined in AWWA C111 and C115 and the material standards in ASTM F593 and F594 with a minimum tensile strength of 75,000psi. Bolts and nuts must have imprinted markings indicating the material and grade of the metal used in fabrication. Where bolts and nuts for fittings cannot be covered by the above references then the contractor must submit to the engineer for approval corrosion resistant bolts and nuts and supported reasons for the request of an alternate to this standard.

I. Continuity Straps

Continuity straps shall be stranded Number 2 AWG copper wire with HMWPE insulation suitable for direct burial.

J. Thrust Restraint System

Where specified on the Drawings and/or required in these Specifications, water distribution piping must be installed with a thrust restraint systems. Joints, fittings, valves and piping deflection points must utilize a thrust restraint system.

The Contractor shall provide pipe manufacturer submittals, which include thrust restraint calculations prior to construction.

Contractor shall field demonstrate to the Engineer the installation and/or construction of each new restrained joint or restraining system. Contractor shall provide AWWU with a minimum of 48 hours notice, excluding non-working days, to coordinate the review of the field demonstration. The Contractor shall certify that the restrained joint system is installed in accordance with the manufacturer's instructions. If Contractor fails to install the restrained joint system in accordance with manufacturer's instructions, in the opinion of the Engineer, Contractor shall remove the disapproved system and replace with a new restrained joint system.

Contractor shall be responsible for access to the field demonstration location and all trench excavation, dewatering, and backfill operations prior to, during, and after

the restrained joint system is reviewed by the Engineer. The cost for coordinating and providing access for review of Contractor's installation and/or construction of the restrained joint system shall be incidental to the bid item under construction.

Ductile Iron Pipe

Allowed ductile iron thrust restraint systems are EBAA Iron MEGALUG®, Romac RomaGrip, Romac GripRing™, Romac RFCA, Foster Adaptor, U.S. Pipe Field LOK 350® Gasket, Ford Uni-Flange Series 1400 or equal thrust restraint system.

Tie back rods and/or tie back rod and shackle assemblies, along with thrust blocks will not be acceptable thrust restraining system for valves, fittings, piping deflection points, and inside casing.

Metallic fittings when not connected, bonded, made amalgams to the pipe cathodic protection system will require a separate corrosion protection system.

Polyvinyl Chloride Pipe

Allowed polyvinyl chloride pipe thrust restraint systems are heat fusion bonding, Certa-lok, Eagle-Loc, EBAA Iron MEGALUG®, EBAA Iron Tru-Dual®, EBAA Iron Restraint Harness, Romac PVC-RomaGrip™, Romac RFCA for PVC Pipe, Romac 600 Series, Romac 470, Romac GripRing™, Foster Adaptor, Ford Uni-Flange Series 1500 or equal thrust restraint. Thrust blocks are required on all bends, tees and crosses.

Chemical bonding will not be allowed. Metallic fittings require corrosion protection.

High Density Polyethylene Pipe

Allowed high density polyethylene pipe thrust restraint systems are heat fusion bonding, electrical fusion bonding, and flange fittings fusion bonded with metallic backer rings.

Metallic fittings require corrosion protection.

Copper Pipe

Allowed copper pipe thrust restraint systems are the use of flared fittings and silver solder joints.

K. Material Limitations

Copper, polyvinyl chloride (PVC) and ductile-iron pipe are the only pipe materials allowed on water service connections.

Copper pipe for direct bury is limited in size from 1” to 2” in nominal diameter.

L. Trace Wire

Tracer wire for water lines is to be #10 AWG high-strength copper clad steel with a 30-mil HDPE insulation jacket (color blue) and have a 600-pound average tensile break load. Tracer wire may be manufactured by Copperhead Industries or an approved equal.

Article 2.3 Construction

A Planned interruptions

Water service and mainline interruptions must be minimized. All planned interruptions require notifying AWWU, the Engineer, and affected property owners and residents a minimum of seventy-two (72) hours and a maximum of one-hundred forty-four (144) hours in advance of the interruption. Each interruption requires a separate notification. Interruptions not started within the planned interruption period require a new notice and waiting period. The AFD is to be notified for all water interruptions and the MOA health department is to be notified for water interruptions to food and health care establishments.

Property managers/owners of buildings that potentially have fire sprinkler/alarm systems are to be notified of pending outages in addition to residence/occupants of such spaces. The property manager is to be given three working days to take necessary precautions to mitigate any potential effects to the sprinkler/alarm system from the interruption.

It shall be the Contractor's responsibility to coordinate "turn-off" and "turn-on" with the Engineer.

B. Excavation and Backfill

The Contractor shall provide all excavation, backfill, and compaction necessary to install pipe in accordance with Division 20, Section 20.13 - Trench Excavation and Backfill.

C. Materials Delivery

Pipe and appurtenances shall be handled in such a manner to ensure delivery to the trench in a sound, undamaged condition. Particular care shall be taken not to damage the pipe, pipe coating, or lining. Before installation the engine is to be provided an opportunity to examine the pipe and appurtenances for damage and defects. Damaged or defective pipe may be rejected. Rejected pipe must be removed from the project and replaced with acceptable material at no additional cost.

The pipe shall not be strung out along the shoulders of the road for long distances if it causes inconvenience to the public. The amount of pipe strung at the job site shall be at the discretion of the Engineer.

Rubber gaskets shall be protected from extended exposure to direct sunlight. Gaskets are to be installed when the ambient temperature is above freezing.

D. Installation

Installation shall be in accordance with the requirements of ANSI/AWWA C600, C605, M23, M41 and M55 except for the following items

Deflection at pipe to pipe joints is to be limited to 80% of the maximum deflection angle recommend by the pipe manufacturer for ductile iron pipe

Deflection at pipe to pipe joints is to be limited to 0% of the maximum deflection angle recommend by the pipe manufacturer for polyvinyl chloride pipe

Testing allowance (leakage allowance) will not be allowed

Flushing must meet the AWWA and AWWU requirements

The interior of the pipe and accessories shall be thoroughly cleaned of foreign matter before being lowered into the trench. The pipe shall be kept clean during laying operation by plugging.

Pipe and appurtenances shall be carefully lowered into the trench by means of derrick, ropes, belt slings, or other suitable equipment. Under no circumstances shall any of the pipe or appurtenances be dropped or dumped into the trench. Care shall be taken to avoid abrasion of the pipe coating. Poles used as levers or skids shall be of wood and shall have broad, flat faces to prevent damage to the pipe and coating.

The trench bottom shall be graded to provide uniform support for the pipe barrel. Water shall be kept out of the trench by pumping, if necessary, until the jointing is completed. When Work is not in progress, open ends of the pipe, fittings, and valves shall be securely plugged so that no trench water, earth or other substances will enter the pipes or fittings. Where any part of the coating or lining is damaged, the repair shall be made by the Contractor at his expense and in a manner satisfactory to the Engineer. At a sufficient distance, prior to encountering a known obstacle or tie-in to an existing pipe, the Contractor shall expose and verify the exact location of the obstacle or pipe so that proper alignment and/or grade may be determined before the pipe sections are laid in the trench and backfilled. The connections shall be made by using fittings to suit actual conditions. All connections larger than two inch (2”) diameter made under pressure shall be made by AWWU forces.

Pipe ends left for future connections shall be plugged or capped, and restrained, as shown on the Drawings or as directed by the Engineer. The Contractor shall install vertically an eight foot (8') wood post, directly over the end of pipe.

Cutting of pipe shall be done in a neat and workmanlike manner without damage to the pipe.

All non-tightly bonded coated ductile iron pipe and fittings are to be encased in one layer of polyethylene encasement. All Valve boxes and hydrant barrels, regardless of coatings, are to be encased in three layers of polyethylene encasement. Polyethylene Encasement is to be installed in accordance with Section 60.07 - Polyethylene Encasement.

Water mains and services shall be constructed to meet all separation requirements of 18 AAC 80.020. Variance from the separation requirements requires a waiver from the Alaska Department of Environmental Conservation and prior approval from AWWU. The Contractor shall stagger the joints for the water pipe such that no joint is closer than nine feet (9’) from the centerline crossing of water to sanitary sewer and storm drain pipes. In addition, where water and sanitary sewer or storm sewer mains and services intersect, the vertical separation between the water and pipelines shall be eighteen inches (18”) minimum between exterior pipe surfaces.

E. Alignment and Grade

Contractor shall lay the pipe in the trench so that after the line is completed, the bottom of the pipe conforms accurately to the grades and alignment given by the Engineer. A maximum two-tenths foot (2/10' or 0.2') deviation from design elevation and alignment will be allowed. The pipe shall be generally straight to visual observation as determined by the Engineer.

The Contractor shall check both line and grade and record measurements in a field book for each piece of pipe and appurtenance laid. The Contractor shall have instruments such as a transit and level for transferring alignment and grades from offset hubs. He also shall have in his employ a person who is qualified to use such instruments and who shall have the responsibility of placing and maintaining such construction guides. The Contractor will furnish to the Engineer a copy of the surveyor's notes for the newly installed pipe and appurtenances. The practice of placing backfill over a section of pipe to provide a platform for instruments shall be subject to the approval of the Engineer and shall be accomplished in accordance with Division 20, Section 20.13, Article 13.3 - Construction.

All adjustments to line and grade shall be done by scraping away or filling the earth under the body of the pipe and not by blocking or wedging up. Deflection of the pipe to achieve vertical curves, horizontal curves, or off-sets must not be greater than allowed.

If the alignment requires deflection in excess of the above limitations, the Contractor shall furnish special bends to provide angular deflections within the limits allowable. Short radius curves and closures shall be formed by shorter lengths of pipe, bevels, or fabricated specials.

F. Jointing of Ferrious Metal Pipe

The Contractor has the option of using either mechanical or push-on joints. All joints shall conform to the requirements of ANSI/AWWA C600.

The Contractor is required to use mechanically restrained joints and fittings on all hydrant leads. The Engineer has the option of checking any or all mechanical joints to assure proper torque as specified by the manufacturer.

Metallic pipe is to have two (2) electrical continuity straps installed on each side of every joint for all pipe diameters. Straps are to be welded to a clean, dry surface. Each exothermic wire weld connection is to be protected with one (1) field applied Royston Handy Cap IP or equal. Uncoated surfaces are to be coated with coal tar pitch to the satisfaction of the Engineer. Split bolts or mechanical bolt connection of the wires will not be allowed.

Whenever flange connections are shown on the Drawings, called for in the Specifications, or required in the Work, the flange and fittings shall conform to the requirements of AWWA C110/ANSI A21.10 for two hundred fifty pound (250#) pressure ratings.

G. Jointing of High Density Polyethylene

All HDPE water main piping and fittings is to be butt-fused in accordance with ASTM D2657. The individual who performs the butt-fusion shall have written

certification from an HDPE pipe manufacturer stating he/she has successfully completed an 8-hour (minimum) certification class on butt–fusion techniques and procedures. In addition, this individual shall have fused a combined total of more than 5,000 feet of hope piping in diameters 4-inches and larger.

The contractor shall ensure that each joint is fused at the temperature and pressure recommended by the pipe manufacturer in order to achieve the maximum pressure rating for that joint. All butt-fused joints for HDPE piping and fabricated fittings shall be documented by a computer data logger that records pressure and temperature applied at each fused joint, along with the date and time the joint was fused. Computer printouts, electronic data, and the project station for each field fused joint shall be submitted to AWWU through the Engineer.

The use of electro-fusion couplings to join HDPE piping may be allowed upon written approval of AWWU and the Engineer. Electro-fusion couplings shall comply with ASTM F1055. Contractor shall record the exact location of any installed electro-fusion coupling in the record drawing submittal.

H. Jointing of PVC pipe

The Contractor has the option of using butt fusion, mechanical joints or push-on joints. Except for butt fusion, all joints shall conform to the requirements of AWWA C605. Fused joints must done by a qualified fusion technician, recorded by an electronic monitor and be completed per the pipe manufacturer's recommendations

The Contractor is required to use mechanically restrained joints and fittings on all hydrant leads. The Engineer has the option of checking any or all mechanical joints to assure proper torque as specified by the manufacturer.

I. Jointing of Copper pipe.

Copper pipe may be joined with the use of soldered couplers, three part unions and by swedging with solder. Solder must be silver solder. All joints are to be outside of the rights-of-ways and/or easement, unless give prior approval by the AWWU Engineering Director.

J. Detectable Warning Tape

Detectable underground warning tape is required for installation of all pipe types. Warning tape must not be less than five (5) mil, foil backed, six inches (6") wide vinyl tape, colored green, with "Caution Buried Sewer Line Below" continuously printed in black along the tape length. The warning tape must be continuously laid with the pipe and be at least eighteen inches (18") above and no more than thirty six inches (36") the pipe.

K. Tracer Wire for PVC and HDPE Pipe

Tracer wire shall be grounded at all dead ends, except fire hydrant legs, using a 24-inch long minimum copper clad grounding rod. A grounding clamp approved for direct burial use shall be used to connect the tracer wire to the grounding rod. Direct burial grounding clamps shall be EK17 as manufactured by Erico or approved equal.

Tracer wire shall be securely affixed to the top exterior surface of the pipe using PVC pipe tape at 5-foot intervals. Tracer wire shall be looped around valves, saddles, curb stops, and other appurtenances in such a manner that there is no interference with the operation of the appurtenances. Tracer wire shall be continuous and without splices, breaks, or cuts except for spliced-in connections as approved by the Engineer. Where any approved spliced-in connections occur, 3M DBR watertight connectors, or approved equal, shall be used to provide electrical continuity. All spliced connections must be inspected by the Engineer before being buried.

Tracer wire shall be brought to the surface at all junctions and terminals, including at all valve boxes for water valves and fire hydrant legs. DryConn Waterproof Direct Bury Lugs as manufactured by King Innovation, or approved equal, shall be used to splice into the main line tracer wire. The main line tracer wire shall not be broken or cut. Tracer wire shall be spiral-wrapped around the exterior of the valve box riser pipe and brought into the valve box top section. Provide 5 feet minimum of additional wire neatly coiled within each valve box.

Prior to final payment, a continuity test shall be performed on tracer wire with the Engineer present to verify that the trace wire is continuous and allows for the proper tracing of the piping. If the Engineer identifies locations where the trace wire is not continuous, to include all connection points between new and existing water mains, the Contractor, at no additional cost to the Owner, shall make necessary repairs/corrections. Continuity testing shall be conducted prior to repaving roadways.

Article 2.4 Flushing and Testing

An AWWU representative must be present for all testing and flushing. Water, sewer and storm drain main and service trenches are to be substantially filled and compacted prior to flushing and testing. The Contractor shall perform the flushing, hydrostatic testing, disinfection, and continuity testing. The Contractor is made aware that in the event repairs are made on the system in order to pass the hydrostatic test, and these repairs are made subsequent to disinfection of the system, then the open-bore flush and the disinfection will be null and void and shall be repeated to the satisfaction of the Engineer after the repairs are made. Costs for repeat testing and flushing will be incidental to the bid item being tested.

A request to supply water for flushing, testing, and disinfecting shall be scheduled in writing with the Engineer at least forty eight (48) hours prior to obtaining AWWU-supplied water. The request for flushing, testing, and disinfecting will be subject to water availability. In the event of high water demand or low water availability within the AWWU water system, meeting Contractor's schedule may not be possible.

Contractor shall submit, in writing, for the Engineer to review and approve, a schedule and procedure for the testing and flushing of all newly installed pipe. When, in the opinion of the Engineer, the testing and flushing schedule and procedure is deficient, inadequate, improper, or conditions are such that the impact to existing water service areas are adversely affected by service interruptions, the Contractor will be notified in writing by the Engineer. Such notification shall be accompanied by a statement of the corrective action

to be taken. Contractor shall adhere to the testing and flushing schedule and comply with such instruction as directed by the Engineer.

All water mains, service lines (including stub-outs), fire lines, and fire hydrant legs must be flushed, hydrostatically tested, and disinfected before the piping system can be put into service. All piping and components in the test section shall be restrained and the trench section shall be substantially backfilled before the piping system is flushed. The Contractor cannot hydrostatically test and disinfect the piping system at the same time.

A. Flushing

All newly installed pipe systems are to be open-bore flushed, including fire lines. Flushing must be completed prior to hydrostatic testing and disinfection.

Sufficient water velocity must be achieved and maintained to remove foreign matter from within the pipe. The Contractor is to configure the flushing operation, where possible, from higher to lower elevation, utilizing higher pressure mains first, allowing AWWU to manipulate the water distribution system to achieve higher than normal pressures and flows to the newly constructed main or other appropriate measures to increase flushing velocities.

The Contractor shall furnish, install and remove all fittings and pipes necessary to perform the flushing, at no additional cost to the Owner.

It will be the Contractor's responsibility to notify the Engineer and AWWU forty eight (48) hours in advance of any flushing operations. The Contractor shall provide a plan for approval by the Engineer for the disposal of the discharge waters from the open-bore flush. The flush water discharge location must receive approval from governing authority of that location.

Depending upon the availability of water, flushing of newly constructed pipe systems may be required by AWWU to take place during non-working hours, holidays, Saturdays or Sundays. The Owner will not be responsible for any additional cost incurred by the Contractor for flushing outside of usual working hours.

The Contractor must comply with the following restrictions:

- Flushing must not be completed through hydrants or reduced outlets
- Flush water must not be directly connected to the sanitary sewer system. When specifically permitted by AWWU, flush water discharged to the sanitary sewer system must be de-chlorinated, have flow regulation, and be limited to the sewer system capacity. The sewer system capacity may exclude discharging to sewer regardless of the flow conditions at the proposed discharge point.
- The Contractor shall not operate the AWWU water distribution system. Only AWWU personnel are authorized to manipulate the existing pipe system to supply water for flushing and testing.

When, in the opinion of the Engineer, the Contractor’s proposed testing and flushing schedule and procedure is deficient, inadequate, improper, or conditions are such that the impact to existing water service areas are adversely affected by service interruptions, the Contractor will be notified in writing by the Engineer. Such

notification shall be accompanied by a statement of the corrective action to be taken. Contractor shall adhere to the testing and flushing schedule and comply with such instruction as directed by the Engineer.

B. Hydrostatic Testing

A hydrostatic test (Pressure Test) must be conducted on all newly constructed water pipe, fire hydrant leads, services and stub-outs in accordance with the requirements of the referenced AWWA standards unless hereinafter modified. The Contractor shall furnish all necessary assistance, equipment, labor, materials, and supplies (except the test pressure gauge) necessary to complete the test to the satisfaction of the Engineer. The Contractor shall suitably valve-off or plug the outlet to the existing or previously-tested water main at his expense, prior to making the required hydrostatic test. Prior to testing, all air shall be expelled from the pipe. If permanent air vents are not located at all high points and dead ends, the Contractor shall, at his expense, install corporation cocks at such points so the air can be expelled as the line is slowly filled with water.

All main valves, fire hydrant valves, and plugs shall be tested. All intermediate valves within the section being tested will be closed and reopened as directed by the Engineer during the actual test. Only static pressure will be allowed on the opposite side of the end valves of the section being tested.

All hydrostatic testing will be performed through a test copper. The test pressure shall not exceed the design pressure of the pipe, fittings, valves, thrust restraints, or other appurtenances of the test section. Use of fire hydrants for testing will not be allowed.

If the pressure decreases below the required test pressure during the test period, the preceding portion of that test will be declared void. Cracked or defective pipe, gaskets, mechanical joints, fittings, valves, or hydrants discovered as a consequence of the hydrostatic tests shall be removed and replaced with sound material at the Contractor's expense. The test shall then be repeated until the results are satisfactory.

The Contractor shall notify the Engineer forty-eight (48) hours, (two (2) working days) prior to any test and shall notify the Engineer two (2) hours in advance of the scheduled time if the test is to be canceled. In the event the Engineer has not been notified of cancellation and the Contractor is not prepared for the test as scheduled, the Contractor shall reimburse the Engineer for all expenses incurred. These will include, but not be limited to, salaries, transportation and administrative costs.

Hydrostatic testing of water pipe lines containing a chlorine mixture above 2 ppm will not be allowed.

<u>PVC, DIP, Copper - Testing</u>

The hydrostatic pressure shall be one hundred fifty (150) psi. The duration of each hydrostatic pressure test shall be thirty (30) minutes. After the required test pressure has been reached, pumping will be terminated. If the pressure remains constant for 30 minutes without the aid of a pump, the results of the test shall be considered satisfactory as approved by the Engineer. The leakage allowance described in ANSI/AWWA 600 shall not be allowed. Fire lines must pass a pressure

test at two hundred (200) psi for two hours in accordance with the Fire Underwriter's requirements as outlined in the National Fire Codes.

HDPE - Testing

The hydrostatic pressure test procedure for HDPE consists of filling the piping with water, an initial expansion phase, a test phase, and depressurizing. Before applying hydrostatic pressure test, all piping and all components in the test section shall be restrained and the trench section backfilled to original grade. The maximum test duration is eight (8) hours including time to pressurize, time for initial expansion, time at test pressure and time to depressurize the test section. If the test is not completed due to leakage, equipment failure, or for any other reason, depressurize the test section completely and allow it to relax for at least eight (8) hours before pressurizing the test section again. The newly installed HDPE water main shall be hydrostatically tested to the rated operating pressure of the pipe. The rated operating pressure of HDPE SDR11 piping is 160 psi. See PPI Handbook of Polyethylene Pipe Chapter 2 for test pressures for other SDR's.

Gradually pressurize the test section to test pressure and maintain test pressure for four (4) hours. During the initial expansion phase, polyethylene pipe will expand slightly. Additional test liquid will be required to maintain pressure. It is not necessary to monitor the amount of water added during the initial expansion phase. Immediately following the initial expansion phase, reduce test pressure by 10 psi and stop adding test liquid. If there are no visible leaks and the test pressure remains steady (within 5% of the target value) for one (1) hour, the water main shall be deemed as having passed the test.

C. Disinfection

Disinfection of the newly installed water pipe is to take place after passing the hydrostatic test requirements. To disinfect the newly installed main, the Contractor may elect to apply the disinfectant by one of the following methods:

1. liquid chlorine gas-water mixture, or
2. calcium hypochlorite and water mixture. Calcium hypochlorite shall be comparable to commercial products known as HTH, Perchloren or Machochlor.

The chlorinating agent shall be applied at a point of not more than ten feet (10') from the beginning of the new water pipe. Under no conditions shall the chlorinating agent be introduced through a fire hydrant. Water is to be fed slowly into the new line with chlorine applied in amounts to produce a dosage of a minimum of twenty-five parts per million (25 ppm). Water is to be expelled from the new main through the end and all branches and services until the required dosage is evident at all extremities. Points at which the highly chlorinated solution is expelled is to be no more than 10' from the end of main, service or branch line.

The Contractor may submit alternate disinfection plan that is compliant with ANSI/AWWA C-651 to the Engineer for review and approval.

Calcium hypochlorite shall be mixed into a solution of water and injected or pumped into the water main. During the chlorination process, all intermediate valves and accessories shall be operated. Valves shall be manipulated so that the strong

chlorine solution in the line being treated will not flow back into the line supplying the water.

A residual of not less than ten parts per million (10 ppm) chlorine shall be retained at all extremities of the newly installed pipe after twenty-four (24) hours. After which this residual shall be flushed from the line at its extremities until the replacement water tests are equal chemically and bacteriologically to those of the permanent source of supply.

The Contractor shall provide a plan for approval by the Engineer for disposal of chlorinated waters from the disinfection of the system. Under no circumstances shall the spent chlorine solution be discharged to the sanitary sewer system without prior approval of AWWU and the Engineer. The governing authority shall approve the de-chlorination discharge method and location. In no instance shall a water main be chlorinated before open-bore flushing.

After dechlorination is complete, the Contractor shall provide access and accommodate in its schedule for coliform testing. The Engineer shall collect two sets of acceptable samples, taken 24 hours apart, of water from the disinfected piping at the location(s) required by AWWA C651. The samples shall be tested in accordance with AWWA C651 Standard Methods for the Examination of Water and Wastewater, and show the absence of coliform organisms. Samples shall be collected by a qualified person and processed in a certified lab. All preparation and coordination required for disinfection testing and re-testing shall be the responsibility of the Contractor. Additional compensation or contract time extensions for re-testing due to inadequate disinfection will not be granted.

CHLORINATION

Pipe Diameter (ID)	Dosage (oz.) per 100 feet
4"	.34
6"	.76
8"	1.34
10"	2.10
12"	3.02
14" and larger	D^2 x 3.02

1. D is the inside diameter in feet.
2. One Heaping Tablespoon ≅ ½ oz.

The above table is to be used as a guide for chlorinating water mains by the calcium hypochlorite and water mixture method. This dosage takes into account that Contractors most frequently used granular HTH, which is sixty-five percent (65%) pure. If another chlorinating agent is used, the dosage must be adjusted. Caution should be exercised against producing too high a concentration of chlorine in the line.

Disinfection will not be allowed until all open-bore flush pipes are removed and the water system is sealed.

D. Continuity Tests

The Contractor shall perform electrical conductivity tests on all ductile iron mains in the presence of a representative of the Engineer. Continuity testing shall also be performed on all water service connections and extensions greater than two inches (2") in diameter.

The Contractor shall maintain a circuit of six hundred (600) amperes DC current for a period of fifteen (15) minutes. Input current shall not exceed ten percent (10%) of the return circuit. All equipment necessary to maintain the circuit shall be supplied by the Contractor.

All continuity tests will be through wires connected to the main and brought to the surface. The use of water service thaw wires, fire hydrants and valves as substitutes for wires will not be accepted. All wires brought to the surface to complete the continuity test shall be placed in a valve box adjustment sleeve.

Continuity tests must not be performed until all excavations have been completed and backfilled.

E. Test and Air Vent Copper Pipe Removal

The Contractor shall, upon acceptance of testing, remove all test and air vent copper pipe and close the corporation stop at the main with a copper disc and flare nut installed in the presence of the Engineer.

Article 2.5 Measurement

Measurement for furnishing and installing water main shall be per linear foot of horizontal distance of the various sizes as set forth in the Bid Schedule. Measurement will be from station to station as staked in the field and as shown on the Drawings, except where the grade exceeds twenty-five percent (25%), in which case measurement will be by actual pipe length.

Article 2.6 Basis of Payment

Payment for this Work shall be in accordance with Division 10, Section 10.07 - Measurement and Payment, and shall include full payment for all Work described in this Section.

Unless specifically identified for payment under a separate pay item, the unit price bid to Furnish and Install (size) (type) Water Main shall include all labor, equipment and materials to furnish and install a functional potable water main including, but not limited to, the following incidental items: delivery of non-serviceable portions of removed pipe, valves, and fittings at a Contractor-furnished disposal site; delivery of serviceable portions of removed pipe, valves, and fittings to the Owner, when directed by the Engineer; installation of all pipe, tees, crosses, bends, caps, plugs, adapters, reducers, thrust restraint systems, and other fittings; installation of thrust blocks; adjustment to finish grade; cleaning and flushing; hydrostatic testing; provisions coordinating the supply of water as required for flushing and hydrostatic testing; disinfecting; continuity testing; protection and/or restoration of all existing utilities; maintenance of existing water distribution system

flows; shoring and/or protection of existing light poles; maintenance and restoration of existing drainage patterns; restoration of existing driveways; signage, mail boxes, newspaper boxes, trees and shrubs located on private property; landscaping, utility markers, survey monumentation; removal and replacement of miscellaneous public or private improvements; preparation of off-roadway areas for topsoil and re-seeding; cleanup, and miscellaneous items required to complete the Work as shown on the Drawings.

Where the Work includes disconnecting existing water services from and existing water main and reconnecting them to a new water main, the disconnection and reconnection of those existing water services will be considered incidental to the price bid for installation of the new water main.

Trench excavation and backfill shall be paid for under Division 20, Section 20.13 - Trench Excavation and Backfill.

Payment shall be made on the following unit:

ITEM	UNIT
Furnish and Install (Size) (Type) Water Main	Linear Foot

SECTION 60.03 FURNISH AND INSTALL VALVES

Article 3.1 General

The Work under this Section consists of the performance of all Work required for furnishing and installing valves, including valve boxes and marker posts.

Article 3.2 Material

Tie back rods and/or tie back rod and shackle assemblies are not acceptable as restrained joints or restraining system for valves and valve/pipe joint interface.

Unless otherwise detailed on the Drawings, valve and valve/pipe interface shall be push-on rubber gasket type conforming to AWWA C111 and be restrained per Section 60.02.

A. Gate Valves

Gate valves shall be iron body, fully bronze mounted, double disc, parallel or resilient seat valves as manufactured in accordance with the requirements of AWWA C509 “Resilient-Seated Gate Valves for Water Supply Service” or AWWA C515 “Reduced-Wall, Resilient-Seated Gate Valves for Water Supply Service”.

Gate valve bonnet bolts shall be Type 316 stainless steel with a minimum tensile strength of 75,000 PSI and shall conform to ASTM F593 and F594. All bolts shall be stamped with the grade marking on the head of the bolt, and shall be “T-316”, “316”, or “F593”.

B. Butterfly Valves

Butterfly valves shall be of the rubber-seated tight-closing type. They shall meet or exceed the performance requirements of AWWA C504 for operational pressures of 150 psi working pressure and 300 psi hydrostatic pressure.

Mechanical joint valve ends shall be per AWWA C110/ANSI 21.10 and AWWA C111/ANSI 21.11 of the latest revision, and "Short-Body" in accordance with the requirements of Table 2 of ANSI/AWWA C504. Accessories (bolts, glands, and gaskets) shall be supplied by the valve manufacturer.

Butterfly valve actuator bolts that are exposed shall be Type 316 stainless steel with a minimum tensile strength of 75,000 PSI and shall conform to ASTM F593 and F594. All bolts shall be stamped with the grade marking on the head of the bolt, and shall be “T-316”, “316”, or “F593”.

Valves must use full ANSI/AWWA C504 Class 150 B valve shaft diameter and full Class 150 B underground service operator torque rating throughout entire travel to provide capability for operation in emergency service.

Valve body shall be high-strength cast iron ASTM A126 Class B. For valves with the rubber seat mounted on the disc, the mating surface in the body shall be 304 or 316 steel. For valves containing the rubber seat in the body, the method of seat retention shall be in accordance with the requirements of ANSI/AWWA C504, except that no retaining fasteners or other hardware shall be permitted in the flow stream.

Valve operators, unless otherwise required by the Contract Documents, shall be of the traveling nut type, sealed, gasketed, and lubricated for underground service and capable of withstanding on overload input torque of four hundred fifty (450) foot-pounds at full open or closed position without damage to the valve or valve operator. The number of turns to operate the valve shall be a minimum of two (2) turns per inch of valve diameter for ninety degrees (90°) of closure travel at a maximum pull of eighty (80) pounds. All valves shall open counterclockwise and be equipped with two inch (2") square AWWA operating nut.

For butterfly valves twenty inches (20") and less, the valve shaft shall be one piece extending full size through valve bearings, disc and shaft seal. In the event that the shaft is turned down to fit connections to the operator, the limits of ANSI/AWWA C504, Section 3.3.2 shall be strictly observed. Carbon steel shafts, if used, shall have 304 or 316 stainless steel journals with static seals to isolate the interior of the disc and the shaft from the water.

For butterfly valves over twenty inches (20"), the valve shaft shall be of two-piece stub shaft type, made of 18-8 Type 304 stainless steel. Valve bearings and shaft seals for valves of all sizes shall meet the requirements of ANSI/AWWA C504 Section 3.6 and 3.7 respectively, with the following additional requirements:

1. Sleeve bearings shall have a maximum coefficient of friction of 0.1.
2. For underground service, packing shall be pressure-energized chevron or "O" ring type, not requiring adjustment and suitable for permanent duty.

C. Pressure Reducing Valves

Pressure reducing valves shall be supplied as directed in the Contract Documents.

D. Valve Boxes

Valve boxes are to meet the requirements of and be constructed of the following individual parts:

Lid – cast or ductile iron with lifting ears that conforms with and fits closely the top section and is rated heavy duty

Top section- cast or ductile iron, rated heavy duty, 18" minimum height, minimum 6" inner diameter, recessed to receive the lid

Dust pan – cast or ductile iron, 3" minimum height, ¼" minimum thick material, lift handle/bar and fits into and rests on the riser

Riser – cast or ductile iron pipe that fits inside the top section and over the bottom section, minimum 10' long

Bottom section – cast or ductile iron, rated heavy duty, 24" minimum height, with round or oval bottom hood sections to fit over the top of the valve

Geotextile – woven, class 2 in conformance with MASS Section 20.25 – Geotextile fabric

Polyethylene film – 8 mil in conformance with MASS Section 60.07 – Polyethylene Encasement

Burlap bag – all natural, biodegradable fabric woven from jute fibers with openings of less than 1/8”

Tape – minimum 2” wide, 20 mil thick, UPC approved PVC Tape

Heavy duty rated items are to meet AASHTO M306 criteria. Internal diameter of the smallest section shall not be less than five inches (5”). Minimum thickness of the metal shall not be less than five-sixteenth inch (5/16”). Castings shall be smooth and the workmanship shall be acceptable to the Engineer.

E. Markers

Valve boxes shall be marked with markers consisting of two and one-half inch (2.5”) O.D. galvanized steel pipe sections, seven feet (7’) in length, with three feet (3’) buried in the ground. Markers shall be shop painted "Caterpillar Yellow" and painted with stenciled two inch (2”) black numerals, showing the appropriate references. Markers shall be located on the nearest property line, due north, south, east or west of the valve at a maximum distance of fifty feet (50’), unless otherwise directed by the Engineer. Markers shall not be required where valve boxes are located in paved areas. Markers shall carry the following notation:

VB (feet) (direction)

F. Live Tap Connections

Contractor shall provide all trench excavation, backfill, and compaction necessary to assist AWWU with the live tap connections. Excavation for live tap connections shall be unclassified and Contractor shall excavate substances encountered to the depth required for the live tap connections. Variations from the depth indicated in the Drawings will not be grounds for additional compensation. It shall be Contractor's responsibility to familiarize himself with the depth of water mains for the project. Contractor shall excavate for live tap connections in such a manner that the excavation is 90° to the main water line, whenever possible. The trench shall be long enough and of sufficient width at the bottom to allow installation of the valve for the live tap connection and provide safety for AWWU Operations personnel.

Contractor shall be responsible for, and shall bear the expenses incurred, if a water main should be damaged during excavation or backfilling. AWWU, at it’s option, will allow the Contractor to make repairs, or AWWU will make repairs; however, Contractor shall bear the cost of all material, labor, and other expenses.

Contractor shall provide assistance, equipment, labor, materials, and supplies (except the water main line valve) necessary to complete the live tap connection. Contractor shall notify the Engineer and AWWU 48 hours (two working days) prior to installation of the live tap connection. In addition, Contractor shall obtain all necessary permits for the live tap connection and pay all associated fees.

Unless otherwise detailed on the Drawings, valve and valve/pipe interface shall be push-on rubber gasket type conforming to AWWA C111. Where specified on the Drawings, restrained joint pipe shall be EBAA Iron MEGALUG®, Romac Industries RomaGrip, or approved equal.

Contractor shall provide pipe manufacturer submittals which include thrust restraint calculations prior to construction.

Article 3.3 Construction

The Contractor shall provide all trench excavation, backfill, and compaction necessary to install valves in accordance with Division 20, Section 20.13 - Trench Excavation and Backfill.

Valves or valve boxes shall be installed where shown on the Drawings. Valve box components shall be plumb and centered over the operating nut. Valve boxes shall be of sufficient length (ten foot [10'] sections) for the pipe cover depth on the profile drawings. The valve operator shall be placed on the side of the water main away from the centerline of the street or easement. On fire line installations, a valve shall be placed outside the building so that all fire hydrants will remain in service in the event water service to the building must be shut off for any reason.

Valves shall have the interiors cleaned of all foreign matter before installation. If the valve is at the end of the line, it shall be plugged prior to backfilling. The valve shall be inspected by the Engineer in the open and closed positions to ensure that all parts are in working condition.

Provisions shall be made to prevent soil infiltration into the valve box. Wrap burlap inside bottom section under the packing gland and wrap three (3) layers of woven geotextile fabric around the outside of the valve and base section of the valve box and secure the fabric at the top and bottom with tape. Encase the valve box with three layers of eight-mil polyethylene, encasement, taped securely in place.

The Contractor shall expose all valve boxes for prefinal and final inspection. After final inspection of the valves located in unpaved areas, Class 'E' bedding is to be placed directly over the valve box lid to facilitate locating and uncovering in the future.

Article 3.4 Measurement

The quantity to be paid shall be the actual number of valves of each class and size (including valve boxes and marker posts) furnished, installed and accepted.

Article 3.5 Basis of Payment

Payment for this Work shall be in accordance with Division 10, Section 10.07 - Measurement and Payment, and shall include full payment for all Work described in this Section.

Payment shall be made on the following unit:

ITEM	UNIT
Furnish and Install (Size) Gate Valve	Each
Furnish and Install (Size) Butterfly Valve	Each

SECTION 60.04 FURNISH AND INSTALL FIRE HYDRANTS

Article 4.1 General

The Work under this Section consists of the performance of all Work required for the furnishing and installation of "L-Base" Fire Hydrant Assemblies, including the fire hydrant leg pipe, auxiliary gate valve, valve box, joint restraint, guard rails, and fire hydrants.

Article 4.2 Materials

A. Fire Hydrants

Fire hydrants shall conform to the requirements of ANSI/AWWA C502 for Dry Barrel Fire Hydrants. Fire hydrants shall be Mueller Centurian or equal.

1. All fire hydrants shall be supplied with a five and one-fourth inch (5.25”) main valve opening.
2. All single pumper hydrants shall be furnished with a six inch (6”) ANSI Class 125 standard mechanical-joint end. All double pumper hydrants shall be furnished with an eight inch (8") ANSI Class 125 standard mechanical-joint.
3. All connections shall be mechanical-joint unless otherwise indicated in the Contract Documents.
4. Single pumper hydrants shall be furnished with two (2) two and one-half inch (2.5”) hose connections and one (1) four and one-half inch (4.5”) pumper connection. Double pumper hydrants shall be furnished with one (1) two and one-half inch (2.5”) hose connection and two (2) four and one-half inch (4.5”) pumper connections.
5. Unless otherwise required by the Contract Documents, all hydrants shall be furnished with a barrel length that will allow a minimum of ten feet (10’) of bury. The lower barrel must be one piece to achieve a ten foot burial depth.
6. The main valves shall be of the compression type, where water pressure holds the main valve closed permitting easy maintenance or repair of the entire barrel assembly from above the ground without the need of a water shutoff.
7. All fire hydrants shall be furnished with a breakaway flange which allows both barrel and stem to break clean upon impact from any angle. Traffic flange design must be such that repair and replacement can be accomplished above ground.
8. Painting and coating shall be in accordance with cited AWWA Specifications. After installation, the hydrant section from the traffic flange to the top of the operating nut shall be painted "Caterpillar Yellow."
9. Operating and nozzle nuts shall be pentagon shaped with one and one-half inch (1.5”) point to flat measurements.
10. Hose nozzle threading shall be in conformance with NFPA #194 for National (America) Standard Fire Hose Coupling Screw Threads.

11. All working parts shall be bronze or noncorrosive metal in accordance with the requirements of ANSI/AWWA C502.

12. All hydrants shall be right hand opening (clockwise).

13. All hydrants shall be non-draining. Drain plugs shall not be removed.

14. The operating nut of the hydrants is to be a minimum of twenty eight (28") above the traffic breakaway flange. The traffic breakaway flange is to be between three inches (3") to nine inches (9") above adjacent grades.

B. Auxiliary Gate Valves

All gate valves and valve boxes shall be furnished and installed in accordance with Section 60.03 - Furnish and Install Valves.

C. Thrust-Restraint System

Unless otherwise detailed on the Drawings, Contractor shall provide push-on rubber gasket type conforming to AWWA C111. Where specified on the Drawings and/or Standard Details, Contractor shall install EBAA Iron MEGALUG®, Romac Industries RomaGrip, U.S. Pipe Field LOK® Gasket System, or approved equal, on restrained joint pipe. Contractor shall ensure all restrained-joint installation areas shall include joints, fittings, and piping deflection points.

D. Guard Posts

The Contractor shall install guard posts at each hydrant installation in accordance with the Standard Details. If, in the opinion of the Engineer, the guard posts are not to be installed, they shall be delivered to the Anchorage Water and Wastewater Utility storage yard. Measurement and payment for guard posts shall be incidental to the Bid item "Furnish and Install Fire Hydrant Assembly."

Article 4.3 Construction

The Contractor shall provide all trench excavation, backfill and compaction necessary to install the fire hydrant assembly in accordance with Division 20, Section 20.13 - Trench Excavation and Backfill.

The Contractor shall tape coat the barrel section, shoe, MJ restraint, and all buried bolted connections with Densyl Tape as manufactured by Denso or approved equal. All surfaces shall be primed with Densyl Paste as manufactured by Denso or approved equal. The Contractor shall wrap the hydrant barrel section with three layers of 8-mil thick polyethylene encasement, up to the finish ground surface.

The fire hydrant auxiliary valve shall be closed during installation and remain closed during all main line open bore flushing operations. The auxiliary gate valve shall be opened for hydrostatic pressure testing and disinfection and while the hydrant is being raised by AWWU under pressure. All fire hydrant legs shall be installed level. The fire hydrant barrel shall be installed plumb. Fire hydrants will be adjusted to final grade by the AWWU Operations Division. The Contractor shall provide AWWU with a minimum of seventy-two (72) hours notice, excluding non-working days, to coordinate fire hydrant adjustment. The Contractor shall be responsible for access to the hydrant location and all trench excavation, dewatering and backfill operations prior to, during, and after the fire hydrants are adjusted by AWWU personnel. The cost for coordinating and providing trenching

operations are incidental to the fire hydrant installation. Any adjustments to the fire hydrant traffic flange on a Municipal Contract will be made by AWWU at no cost to the Contractor. Adjustment to other fire hydrants will be made by Anchorage Water and Wastewater Utility on a reimbursable basis.

Hydrants installed but not available for use shall be covered with burlap and securely tied.

In lieu of valve box markers for the auxiliary gate valves, the Contractor shall paint in two inch (2") black lettered stencils, the direction and distances to the nearest one-tenth foot (1/10' or 0.1') the distance to the valve box on the face of the fire hydrant directly below the bonnet flange.

Article 4.4 Measurement

The method of measurement to furnish and install fire hydrants shall be as follows:

A. Single Pumper Fire Hydrants

Single Pumper Fire Hydrants shall be measured as complete assemblies furnished, constructed, installed, and accepted in place for each installation, including, but not limited to, fire hydrants six inch (6") leg to main, six inch (6") auxiliary gate valve and valve box, guard post installation, and thrust-restraint system. The price shall include full compensation for furnishing and installing single pumper hydrants as shown in the Standard Details.

B. Double Pumper Fire Hydrants

Double Pumper Fire Hydrants shall be measured as complete assemblies furnished, constructed, installed, and accepted in place for each installation, including, but not limited to, fire hydrants eight inch (8") leg to main, eight inch (8") auxiliary gate valve and valve box, guard post installation, and thrust-restraint system. The price shall include full compensation for furnishing and installing double pumper hydrants as shown in the Standard Details.

Article 4.5 Basis of Payment

Payment for this Work shall be in accordance with Division 10, Section 10.07 - Measurement and Payment, and shall include full payment for all Work described in this Section.

Payment shall be made under the following units:

ITEM	UNIT
Furnish and Install Fire Hydrant Assembly (Single Pumper)	Each
Furnish and Install Fire Hydrant Assembly (Double Pumper)	Each

SECTION 60.05 FIRE LINES

Article 5.1 General

The Work required under this Section consists of the performance of all Work required for the furnishing and installation of fire lines including thrust-restraint system, fittings, valves, and valve boxes.

Article 5.2 Material

Refer to Section 60.02, Article 2.2 – Materials. The fire line riser from the service piping is to be composed of metallic pipe extending vertically from a ninety degree (90°) fitting through the plane of the building floor. The fire sprinkler riser must be constructed of material in compliance with the NFPA. All below grade metallic piping must be cathodically protected.

Article 5.3 Construction

A. General

A fire line that originates at a water utility main or at the valve downstream of a fire hydrant tee has the primary purpose of providing fire protection inside a building. No connections, other than those for additional fire protection, will be allowed on the fire line outside the building. Domestic water obtained from a fire line will be connected and metered inside the building.

Valves and valve boxes shall be installed where shown on the Drawings.

B. Excavation and Backfill

The Contractor shall provide all excavation, backfill, and compaction necessary to install fire lines in accordance with Division 20, Section 20.13 - Trench Excavation and Backfill.

C. Materials Delivery

Refer to Section 60.02, Article 2.3 – Construction.

D. Thrust Restraint

Thrust-restraint systems are to comply with Section 60.02, Article 2.2, SubArticle J and are to be installed for minimum distance of forty feet (40') in both directions from all fittings.

E. Alignment and Grade

Refer to Section 60.02, Article 2.3 - Construction

F. Jointing of Pipe

Refer to Section 60.02, Article 2.3.. - Construction

Article 5.4 Fire Hydrants, Valves and Valve Boxes

Refer to Sections 60.03 and 60.04.

Article 5.5 Flushing and Testing

Refer to Section 60.02 Article 2.4 – Flushing and Testing.

Hydrostatic testing may be performed through the line riser.

Article 5.6 Measurement

Measurement for furnishing and installing fire lines shall be per linear foot of horizontal distance of the various sizes as set forth in the Bid Schedule. Measurement will be from station to station as staked in the field and as shown on the Drawings, except where the grade exceeds twenty-five (25) percent, in which case measurement will be by actual pipe length.

Article 5.7 Basis of Payment

Payment for this Work shall be in accordance with Division 10, Section 10.07 - Measurement and Payment, and shall include full payment for all Work described in this Section.

Unless specifically identified for payment under a separate pay item, the unit price bid to Furnish and Install (size) (type) Fire Line shall include all labor, equipment and materials to furnish and install a functional fire line including, but not limited to, the following incidental items: delivery of non-serviceable portions of removed pipe, valves, and fittings at a Contractor-furnished disposal site; delivery of serviceable portions of removed pipe, valves, and fittings to the Owner, when directed by the Engineer; installation of all pipe, tees, crosses, bends, caps, plugs, adapters, reducers, thrust restraint systems, and other fittings; installation of thrust blocks; adjustment to finish grade; cleaning and flushing; hydrostatic testing; disinfecting; continuity testing; protection and/or restoration of all existing utilities; maintenance of existing water distribution system flows; shoring and/or protection of existing light poles; maintenance and restoration of existing drainage patterns; restoration of existing driveways; signage, mail boxes, newspaper boxes, trees and shrubs located on private property; landscaping, utility markers, survey monumentation; removal and replacement of miscellaneous public or private improvements; preparation of off-roadway areas for topsoil and re-seeding; cleanup, and miscellaneous items required to complete the Work as shown on the Drawings.

Excavation and backfill shall be paid for under Division 20, Section 20.13 - Trench Excavation and Backfill.

Payment shall be made on the following unit:

ITEM	UNIT
Furnish and Install (Size) (Type) Fire Line	Linear Foot

SECTION 60.06 WATER SERVICE LINES

Article 6.1 General

The Work under this Section consists of the performance of Work required for furnishing and installing water service lines including fittings, key boxes, and valve boxes.

A service line provides potable water to a building or lot for domestic or commercial use.

A permit shall be purchased from AWWU permit section prior to any and all construction (either on or off property in the AWWU service area).

Twenty-four (24) hours notification shall be given to AWWU Inspector prior to making the connection available for inspection.

Before an on-property service line permit for any new subdivision can be released for construction, all property corners shall be established and identified.

A water service connection is located in a right-of-way (ROW) or easement and is the pipe and appurtenances extending from a water main to a keybox. A keybox is normally located at the property or water easement line.

A service extension is the pipe and appurtenances within a parcel extending from the keybox to a structure or structures on a private system. The service extension connects the water service to a structure.

Article 6.2 Material

A. Pipe

Pipe material must comply with Section 60.02 – Furnish and Install Pipe

B. Key Box Valve and Valve Box

Keyboxes are to be telescoping, furnished with a lid, have an arch pattern base and is to be constructed of cast or ductile iron. The operating rod and connection pin are to be constructed of stainless steel alloy type 304 or 316. The connection pin is to be a minimum of 3/16” by two inches (2”) long.

Keyboxes located within pavement or concrete are to be adjusted to finish grade and installed in a valve box adjustment sleeve. Adjustment of keyboxes is to be accomplished by removing the keybox lid, installing a black iron pipe coupling, installing a section of black iron pipe, and replacing the keybox lid at the finish grade.

All valves and valve boxes must be furnished and installed in accordance with Section 60.03 - Furnish and Install Valves.

The key box or valve box shall provide a clear and unobstructed access to a curb stop or valve to enable the AWWU operation of the curb stop or valve. Key boxes and valve boxes shall be wrapped with eight mils (8-mils) thick polyethylene encasement. Key boxes or valve boxes shall not be in contact with a gas main. Key boxes or valve boxes shall be installed in the standard location as shown in the Standard Details.

Key boxes shall be of an acceptable construction as outlined in this Article for construction and as shown in the Standard Details for Typical Water Service Connects. Key boxes shall be installed with a standard location marker as defined in the Design Criteria of the Anchorage Water and Wastewater Utility.

Valves shall be of an acceptable construction as outlined in Section 60.03, Article 3.2 - Materials and the Standard Details for Typical Valve Box. Valves shall be installed with a standard marker as defined in Section 60.03, SubArticle 3.2.E - Markers.

C. Thaw Wire

The thaw wire for water service lines shall be insulated No. 2 AWG stranded copper conductor rated for 600V. Insulation shall be HMWPE, or approved for use in buried low temperature service.

D. Tapping Saddle

All service taps are to utilize tapping saddles. Taps two inches (2") and smaller are to use Romac 306, Powerseal 3412AS or equal tapping saddles. Service taps larger than two inches (2") are completed by AWWU.

Article 6.3 Construction

A. Excavation and Backfill

The Contractor shall provide all excavation, backfill, and compaction necessary to install water source lines in accordance with Division 20, Section 20.13 - Trench Excavation and Backfill.

B. Service Connections

A corporation stop or main valve shall be installed at a point in the service line as close to the main water supply as possible. There shall be line pressure in the main at all times connections are being made. Contractor shall construct all service lines two inches (2") and smaller of seamless, soft drawn, polyethylene coated Type K copper. All service connections larger than two inches (2") is to be accomplished by AWWU connection crews. The Contractor may make the connection by special agreement with the AWWU Permits Section. All ductile iron and PVC pipe installations shall be flushed, hydrostatic tested, and disinfected as outlined in Section 60.02 - Furnish and Install Pipe.

A water service line shall not cross property lines of adjoining lots. The key box shall be installed at the edge of the right-of-way or edge of permanent water easement of the lot being served, no closer than five feet (5') from adjoining property lines, and shall be marked by a marker extending three feet (3') above grade, painted blue with 2" high stenciled letters spelling "WATER" near the top. An AWWU representative is to perform the field inspection at the initial connection or service line extension from the AWWU water main without exception. The connection and extension is to be exposed in its entirety for the inspection. The permit shall be posted and available at the time of inspection.

No unions will be allowed in the right-of-way on newly constructed service lines.

Where water service lines intersect with sanitary sewer or storm drain pipelines, the water service line shall be located to provide a minimum vertical separation of eighteen inches (18") between the water pipe and sanitary sewer or storm drain pipeline, with the separation distance measured from outside of water pipeline to outside of sanitary sewer pipeline.

As-built records shall include the pipe station of service connection at the main, service length and distance to the nearest property corner.

C. Excavation

The Contractor shall excavate whatever substances that are encountered to the depth required for the connections. Depth for water service connections will be a minimum of ten feet (10') below proposed finished grade. The ten foot (10') depth below finished grade shall be maintained five feet (5') past the footings, before the depth shall be less than ten feet (10'). Variations in depth from the depth stated above will not be grounds for additional payment. It shall be the Contractor's responsibility to familiarize himself with the depth of water mains for the project. The portion of the right-of-way that extends from the main to the key box (curb stop) will be excavated in such a manner that will allow the service connection to be installed horizontally (no slope). The Contractor shall excavate for water connections in such a manner that the excavation is ninety degrees (90°) to the street line, whenever possible. Two services, two inches (2") or less, shall not be installed in a single trench when separation between keyboxes is greater than twelve feet (12') or two feet (2') separation cannot be maintained. The ditch shall be long enough to allow the key box to be set at the property line.

Trenches shall be of sufficient width at the bottom to allow for laying of the particular service (minimum two and one-half feet [2.5'] for single service).

The Contractor shall expose the main to be tapped for distance of two feet (2') or greater either side of the proposed tap location. Excavation on both sides of the pipe shall be carried to below the bottom of the pipe for clearance of the tapping saddle.

No water service shall be within a horizontal distance of ten feet (10') from the sanitary sewer service, footing drain or storm service.

The Contractor shall be responsible for, and shall bear the expenses incurred, in the event that a main should be damaged during excavation or backfilling. The

water Utility will repair all damaged mains; however, the Contractor shall bear the cost of all material, labor, and other expenses thereof. If approved by AWWU, the Contractor may repair the damaged main.

All on-property installations shall be constructed to the same standard as off-property installations.

D. Backfill

At such time as the Engineer may direct, but only after the service lines and appurtenances have been properly completed and inspected, the trenches and appurtenant structures shall be backfilled. The backfilled material, free from large clods, frozen material or stones, shall be placed by the Contractor in conformance with the codes and regulations of the Municipality.

The Contractor shall exercise due care in backfilling to keep the service box and thaw wire vertical and in place. In the event the service box or thaw wire is displaced, the Contractor will be required to excavate and restore the service box and thaw wire to the proper position. Any work necessary to restore the service box and thaw wire to the proper position will be performed at the Contractor's expense.

A thaw wire constructed to a #2 copper plastic or rubber coated wire shall be attached to the corporation stop on one inch (1") connections by an approved method. On one and one-half (1 1/2") and two inch (2") connections, the thaw wire shall be attached to the saddle on the main. Three inch (3") through ten inch (10") connections shall have continuity straps attached in the same manner as that of main line installation.

E. Disconnects

If an existing service line is replaced by a new service or becomes unusable due to a replat of the property, demolition, or improvements to an existing building, it shall be disconnected at the main, at no cost to the Municipality. The disconnect shall be witnessed by an AWWU inspector.

F. Hydrostatic Testing

Hydrostatic testing must comply with M.A.S.S Section 60.02. A bleeder will be installed at each service line key box and extended a minimum of one foot (1') above the existing ground. The bleeder will be capped after testing is complete. The bleeder may not be used for the on-property system and must be disconnected at the time of the on-property hook-up.

G. Disconnect/Reconnect Water Service

Disconnect and reconnect existing water service lines where shown on the Drawings or as directed by the Engineer.

Reconnect to existing water service line piping with Flare x Flare pipe union. Furnish and install reducer if existing water service extension piping is smaller than new piping. Furnish and install dielectric union if existing water service line piping is of dissimilar metal from new piping. Unions are not to be installed within the ROW.

Article 6.4 Measurement

Measurement for Furnishing and Installing Water Service Lines shall be per linear foot of horizontal distance of the various sizes set forth in the Bid Schedule. Measurement will be from station to station as staked in the filed and as shown on the Drawings, except where the grade exceeds twenty-five percent (25%), in which case measurement will be actual pipe length.

Article 6.5 Basis of Payment

Payment for this Work shall be in accordance with Division 10, Section 10.07 - Measurement and Payment, and shall include full payment for all Work described in this Section.

Unless specifically identified for payment under a separate pay item, the unit price bid to Furnish and Install (size) Water Service Lines shall include all labor, equipment and materials to furnish and install a functional potable water service including, but not limited to, the following incidental items: verify location of existing water services; disconnection and reconnection of customer's existing services where the Work includes replacement of existing services; clearing and grubbing; trench excavation and backfill; excess excavation and backfill; excavation dewatering; trench support system; furnishing and installing Class E bedding; compaction of fill; installation of pipe, fittings, adapters, or other necessary appurtenances; polyethylene encasement; hydrostatic testing, flushing, disinfection, water service insulation; disposal of unusable or surplus material; seeding; protection of existing utilities; restoration of existing drainage patterns; removal and replacement of existing culverts, guardrail, fences, landscaping, and other public or private improvements; finish grading; and cleanup.

Where the Work includes disconnecting existing water services from an existing water main and reconnecting them to a new water main, the disconnection and reconnection of those existing water services will be considered incidental to the costs bid for installation of the new water main.

Fittings and appurtenances as shown on the Drawings or not specifically identified for payment under a separate pay item but required for normal completion of water service line installation, will be considered incidental and shall be included in the linear foot cost of the water service lines.

Payment shall be made under the following unit:

ITEM	UNIT
Furnish and Install (Size) Water Service Line	Linear Foot

SECTION 60.07 POLYETHYLENE ENCASEMENT

Article 7.1 General

The Work under this Section consists of providing all operations pertaining to the furnishing and installation of one layer of polyethylene encasement on all ductile and cast iron mains and services, fittings, fire hydrants, valve boxes, etc. The polyethylene encasement shall be a linear low-density polyethylene film with a minimum thickness of 8 mil.

Article 7.2 Material

The polyethylene encasement material for pipe shall be 8-mils thick and conform to AWWA C105/ANSI A21.5.

Article 7.3 Construction

The Contractor shall use Method A of ANSI/AWWA A21.5/C105 to install polyethylene encasement. Method A:

1. Cut a section of polyethylene tube approximately two (2) feet longer than the pipe section. Remove all lumps of clay, mud, cinders, or other material that might have accumulated on the pipe surface during storage. Slip the polyethylene tube around the pipe, starting at the spigot end. Bunch the tube accordion fashion on the end of the pipe. Pull back the overhanging end of the tube until it clears the pipe end.
2. Dig shallow bell hole in the trench bottom at the joint location to facilitate installation of the polyethylene tube. Lower the pipe into the trench and make up the pipe joint with the preceding section of pipe.
3. Move the cable to the bell end of the pipe and lift the pipe slightly to provide clearance to easily slide the tube. Spread the tube over the entire barrel of the pipe. *Note: Make sure that no dirt or other bedding material becomes trapped between the wrap and the pipe.*
4. Make the overlap of the polyethylene tube by pulling back the bunched polyethylene from the proceeding length of pipe and securing it in place. *Note: The polyethylene may be secured in place by using tape or plastic tie straps.*
5. Overlap the secured tube end with the tube end of the new pipe section. Secure the new tube end in place.
6. Take up the slack in the tube along the barrel of the pipe to make a snug, but not tight, fit. Fold excess polyethylene back over the top of the pipe.
7. Secure the fold at several locations along the pipe barrel (approximately every three (3) feet).
8. Repair all small rips, tears, or other tube damage with adhesive tape. If the polyethylene is badly damaged, repair the damaged area with a sheet of polyethylene and seal the edges of the repair with adhesive tape.

9. Carefully backfill the trench in according to procedures in AWWA C600 Standard. To prevent damage during backfilling, allow adequate slack in the tube at the joint. Backfill should be free of cinders, rocks, boulders, nails, sticks, or other materials that might damage the polyethylene. Avoid damaging the polyethylene when using tamping devices.

Damaged polyethylene encasement is to be repaired or the pipeline removed and the polyethylene encasement replaced. Costs for repair and/or replacement of damaged polyethylene encasement shall be considered incidental to the installation of the polyethylene encasement and/or the installation of the pipeline protected by the encasement.

Article 7.4 Measurement

Polyethylene encasement shall not be measured for payment.

Article 7.5 Basis of Payment

No separate payment shall be made for polyethylene encasement. This Work is considered incidental to the bid item under construction.

SECTION 60.08 TEMPORARY WATER SYSTEMS

Article 8.1 General

The Work under this Section consists of the performance of all operations pertaining to the construction, installation, maintenance and removal of temporary water service during construction of this project to current AWWU customers in the area. It is the intent that the Contractor maintains water service during the entire period of construction activities to all current customers in the project area.

The Contractor shall submit a plan for any temporary water systems to the State of Alaska, Department of Environmental Conservation (ADEC) for review and approval prior to beginning Work on such system. The plan must identify the type of system, the method of construction and the maintenance and operation procedures to be used. The plan must identify service to each existing customer except those who agree in writing to have their service temporarily disconnected. The Contractor shall obtain such agreement. To be submitted with the plan are any agreements between the Contractor and property owner regarding access and use of private property. The methods to be employed in maintaining water service are left to the Contractor. Surface piping, trailer mounted supply systems, and so forth may all be considered as long as they comply with current health standards and requirements. A copy of the ADEC approved plan shall be provided to the Engineer, along with copies of any agreements with property owners referred to above.

The Contractor shall also submit the name and phone number of a contact person and at least one alternate who shall be available on a twenty-four (24) hour basis for repair and/or maintenance of the temporary water system. In the event that the Contractor fails to repair and/or maintain the temporary system and AWWU is required to perform repairs and/or maintenance, all costs associated with said repairs and/or maintenance shall be deducted from the Contract amount.

Article 8.2 Material

The Contractor shall use only those materials and equipment listed in this Section to supply temporary water service. Temporary water service shall be supplied under the service criteria outlined in this Section. All equipment used must be specifically designed and properly disinfected for he storage, handling, and delivery of potable water.

Service shall be supplied to each structure presently served by AWWU. The following minimum criteria shall be use for service to each structure:

A. Forty (40) psi minimum, one hundred (100) psi maximum delivery pressure measured at the connection to the structure.

B. Five (5) gallons per minute flow at the above delivery pressure measured at the connection to the structure. Commercial and other business structures may require higher water flows.

C. Potable water system and water quality shall conform to 18 AAC 80 Alaska Drinking Water Standards.

D. All services to structures shall be valved to allow individual control of service to each structure.

Materials used for temporary water service shall conform to the requirements of these Specifications. The temporary water service system shall be constructed from one or more of the following materials: polyvinyl chloride (PVC), high-density polyethylene (HDPE), copper, ductile iron, cast iron or galvanized steel.

The primary water feeder pipe shall be a minimum of three inches (3") in diameter.

Article 8.3 Construction

All temporary water service equipment shall be disinfected per ANSI/AWWA C652, Disinfection of Water Storage Facilities and ANSI/AWWA C651, Disinfection of Water Mains. All bacteriological samples required under these Specifications shall be done by a testing laboratory certified by the State of Alaska.

All temporary service equipment shall be disinfected prior to connecting to a residence or business and shall be disinfected each and every time the equipment is moved or connected to another residence per above-referenced Specifications.

The Engineer shall be notified twenty-four (24) hours prior to the installation of any temporary water system. The Engineer shall be present to inspect the disinfection process of any temporary water service system.

No residence presently serviced by the AWWU system shall be without water for a period greater than six (6) hours in any twenty-four (24) hours period. Each residence or business owner shall be notified seventy-two (72) hours before they are transferred on or off the temporary water system and before any other service interruption. Prior to constructing temporary water services on private property, the Contractor shall secure a written "Permission to Enter" from the property owner. Such permission shall hold the Municipality of Anchorage, AWWU, and its agents harmless for any claims resulting from damage or harm sustained due to the Contractor's operation. The Contractor shall also provide a copy of each "Permission to Enter" form to the Engineer.

Following the successful installation of the temporary water system, the existing water service shall be appropriately disconnected at a main shutoff valve inside the structure. Qualified personnel who are familiar with building plumbing systems shall accomplish the disconnection of the existing water service. This Work shall be performed to prevent backfeeding water through the service connection.

Fire hydrants may be used as a water source for a temporary water system. The Contractor will be required to obtain a hydrant permit from AWWU and will be required to meet all permit conditions (winter use of a hydrant shall required special permission from AWWU). In addition, the Contractor shall provide a gate valve assembly at the fire hydrant as a shutoff valve for the temporary water system. The Contractor shall furnish and install

a backflow prevention device at the meter. The Contractor shall be responsible for any damage to the hydrant and temporary service piping and shall repair such damage at no cost to the Owner.

Article 8.4 Measurement

Providing temporary water service as required throughout the project shall be measured as lump sum.

Article 8.5 Basis of Payment

Payment for this Work shall be in accordance with Division 10, Section 10.07 - Measurement and Payment, and shall include full payment for all Work described in this Section.

Payment shall be made under the following unit:

ITEM	UNIT
Temporary Water System	Lump Sum

SECTION 60.09 REPLACE VALVE BOX

Article 9.1 General

The Work under this Section consists of performing all operations pertaining to the removal, disposal, and replacement of mainline, service line, fire line, and/or fire hydrant valve boxes that have become separated and/or misaligned to such an extent as to require replacement, from the top of the valve to final finished grade, including the replacement of all valve box sections, lids, and dust pans.

Article 9.2 Material

All materials used in the replacing valve boxes shall conform to the requirements defined in Section 60.03 - Furnish and Install Valves and the Standard Details.

Backfill shall be Type II Classified material to the subgrade elevation.

Article 9.3 Construction

All construction shall be in accordance with the provision of Section 60.03 – Furnish and Install Valves.

All locations where replacing a valve box is required shall be excavated to the top of the valve and conform to the procedures outlined in Section 60.03 - Furnish and Install Valves, concerning installation of the valve box and the Standard Details.

Article 9.4 Measurement

Valve boxes replacement will be measured per unit, complete in place.

Article 9.5 Basis of Payment

Payment for this Work shall be in accordance with Division 10, Section 10.07 - Measurement and Payment, and shall include full payment for all Work described in this Section.

Payment shall be made under the following unit:

ITEM	UNIT
Replace Valve Box	Each

SECTION 60.10 RESET VALVE BOX SECTIONS BELOW FINISHED GRADE

Article 10.1 General

The Work under this Section includes all operations pertaining to the reconnection of mainline, service line, fire line, and/or fire hydrant valve box sections that have separated below finish grade. Work under this Section also includes the requirements of the Drawings and applicable sections of this Division and Division 20 – Earthwork. All broken and/or missing valve box components are to be replaced with new materials furnished and installed by the Contractor in accordance with these specifications.

Article 10.2 Material

All materials used in the reconnection of mainline and fire hydrant valve boxes shall conform to the requirements defined in Section 60.03 - Furnish and Install Valves and the Standard Details.

Backfill shall be Type II Classified material to the subgrade elevation.

Article 10.3 Construction

All construction shall be in accordance with the provision of Section 60.03 – Furnish and Install Valves.

All locations where reconnections are required shall be excavated to the depth required to perform the reconnection. The Contractor shall be responsible for removing the liner inside the valve box casing and determining the location of the separation. Care shall be used to ensure that soil or other foreign matter does not enter the valve box standpipe.

Article 10.4 Measurement

Resetting Valve Box Section Below Finish Grade will be measured per unit, complete in place. The same valve shall not be paid for under this pay item if it is paid for under Section 60.09 - Replace Valve Box. In particular, related work includes, but is not limited to, removal of debris from inside the valve box standpipe, trench excavation and backfill, disposal of unsuitable or surplus material, mechanical compaction, adjust mainline valve box to finish grade, replace broken valve box components, and classified materials. No separate measurement for payment will be made.

Article 10.5 Basis of Payment

Payment for this Work shall be in accordance with Division 10, Section 10.07 - Measurement and Payment, and shall include full payment for all Work described in this Section.

Payment shall be made under the following unit:

ITEM	UNIT
Reset Valve Box Sections Below Finished Grade	Each

SECTION 60.11 REPLACE TOP SECTION OF VALVE BOX

Article 11.1 General

The Work under this Section consists of performing all operations for the removal, disposal, and replacement of mainline, service line, fire line, and fire hydrant valve box top section(s), lid(s), and dust pan(s) that are missing or damaged in the opinion of the Engineer. The Contractor is to provide all labor, materials and supervision required to furnish and install new valve box components needed to rehabilitate existing valve boxes.

Under this Section, rehabilitation of existing valve boxes can include the following items of Work:

Removal and replacement of valve box lids.

Removal and replacement of valve box dust pans.

Removal and replacement of valve box top sections.

The valve box components to be removed and replaced for a specific valve box are identified in the Drawings. The Contractor is to reuse those components that are not to be replaced in assembly of the rehabilitated valve box.

Article 11.2 Material

Materials used in this Work shall conform to the requirements of Section 60.03, Article 3.2 - Material.

Article 11.3 Construction

The Contractor shall excavate around the valve box as needed to access the Work. All excavation, shoring, dewatering, backfill and compaction efforts required to access the Work shall be per Division 20 – Earthwork. All importation of fill and/or disposal of unsuitable material, excavation, and backfill efforts shall be considered incidental to Work, and will not be paid separately.

Upon completion of the Work, the Contractor shall restore the existing grades and surrounding area to preconstruction conditions. Any pavement, sidewalk, curb and gutter, landscaping, and/or other improvements disturbed and/or damaged by the manhole rehabilitation effort shall be restored by the Contractor to preconstruction conditions. Restoration of these conditions shall be considered incidental to the Work, and will not be paid separately.

The Contractor shall remove and replace those valve box components identified in the Drawings. The rehabilitated valve box shall be configured according to the requirements of this Division and the Standard Details.

The Contractor shall use care in protecting those component parts of the existing valve box that are to be reused in the rehabilitated valve box.

Article 11.4 Measurement

Rehabilitated valve box assemblies shall be measured as units complete in place with the components identified in the Drawings replaced and accepted by the Engineer.

All effort required to complete the Work, including excavation, shoring, dewatering, backfilling, restoration of Work area to existing preconstruction conditions, and/or other items of Work needed to complete the Replace Top Section of Valve Box effort shall be considered incidental to the completion of the Work and shall not be paid for separately.

Article 11.5 Basis of Payment

Payment for this Work shall be in accordance with Division 10, Section 10.07 - Measurement and Payment, and shall include full payment for all Work described in this Section.

Payment shall be made under the following unit:

ITEM	UNIT
Remove and Replace Valve Box Lids	Each
Remove and Replace Valve Box Dust Pan	Each
Remove and Replace Valve Box Top Section	Each

SECTION 60.12 ABANDON PIPELINE IN PLACE

Article 12.1 General

The Work under this Section includes all operations pertaining to the abandonment of pipeline in place. Where shown on the Drawings, or otherwise directed by the Engineer, the Contractor shall abandon an existing pipeline in place in accordance with the requirements of this Section.

Article 12.2 Material

Sand slurry shall consist of a mixture of water and sand with an approximate ratio of seven (7) gallons of water per cubic foot of sand. Sand may consist of native material with a particle size distribution such that one hundred percent (100%) of the material passes the No. 4 U.S. Standard Sieve and contains no lumps, frozen material, organic matter, or other deleterious material.

Article 12.3 Construction

Wherever existing pipe is to be abandoned in place, the Contractor shall empty the line of all water, fill the pipe full with sand slurry, and plug the ends. Placement of the sand slurry shall be by means of a tremie pipe or other method that shall enable uniform placement of the sand slurry throughout the length of the pipe being abandoned. The Contractor shall demonstrate the entire pipe to be abandoned has been filled prior to the installation of end caps. Validation shall include placement of a predetermined volume of sand slurry into the pipe to be abandoned.

In the event the pipeline to be abandoned is cracked or crushed, the Contractor shall excavate to the next joint of pipe and install the plug. Crushed pipe sections or portions thereof shall be removed and disposed of by the Contractor.

All excavation, shoring, dewatering, disposal of unsuitable material, backfilling, and compactive effort required for completion of this Work shall conform to the requirements of Division 20 – Earthwork.

During the execution of this effort, the Contractor shall maintain vehicular traffic and pedestrian access as required in Division 10 - Standard General Provisions.

The Contractor shall restore the Work area to preconstruction conditions.

The Contractor shall notify the Engineer twenty-four (24) hours in advance of abandoning each main and shall provide safe access for the inspection of the process.

Article 12.4 Measurement

Measurement of quantities of pipeline to be abandoned in place shall be per lineal foot of pipeline to be abandoned for each nominal pipeline size. Length shall include pipeline that is removed due to damaged ends.

Removal and disposal of pipeline sections that have damaged ends and cannot be plugged in place shall be considered incidental to the Abandon Pipeline in Place scope of Work identified in this Section.

Any excavation, shoring, dewatering, disposal of unsuitable material, backfilling, compactive effort, maintenance of vehicular traffic and/or pedestrian access, paving, landscaping, or restoration of existing preconstruction conditions necessary to complete the Abandon Pipeline in Place scope of Work identified in this Section that is not specifically address by a separate bid item shall be considered incidental to the Work completed under this Section. Costs incurred for completion of these incidental Work items are considered including in the unit cost bid for completion of the Work in this Section.

Article 12.5 Basis of Payment

Payment for this Work shall be in accordance with Division 10, Section 10.07 - Measurement and Payment, and shall include full payment for all Work described in this Section.

Payment shall be made under the following unit:

ITEM	UNIT
Abandon Pipeline in Place (Pipeline Nominal Size) (Type of Pipe)	Linear Foot

SECTION 60.13 CONNECT TO EXISTING WATER SYSTEM

Article 13.1 General

This Section consists of all Work necessary for furnishing all material, labor, and equipment necessary for locating, excavating, and assisting Municipal crews in making a live tap into an existing water main.

Article 13.2 Material

The Contractor shall obtain the live tap permit to initiate the connection process. The live tap permit will be issued by AWWU at no cost to the Contractor for capital projects managed by the Municipality of Anchorage or AWWU.

AWWU will supply the gate valve and valve box for the live tap.

AWWU will furnish the tapping machine and personnel to operate the tapping machine.

All materials used in the construction of connections to the existing water main shall conform to the requirements of Section 60.02 - Furnish and Install Pipe.

Article 13.3 Construction

The Contractor shall be responsible for trench excavation and backfill in accordance with Division 20, Section 20.14 - Trench Excavation, Backfill and Compaction for Service Connections. Excavation shall meet all OSHA standards.

The Contractor shall provide all necessary equipment and manpower to assist AWWU personnel in moving piping, valves, tapping machines and miscellaneous items into and out of the trench during the entire time AWWU personnel are working to complete the installation of the water line tap.

Connections to existing water mains shall utilize existing stubs, tees, crosses and valves. New valves may not be installed downstream of existing valves unless an active service or branch exists downstream of the existing valve.

The Contractor may choose to perform a valve leakage test of the existing valve in the presence of an AWWU inspector prior to making a connection. The quantity of water lost per hour shall be recorded and added to the completed main during pressure testing. Contractor shall remove existing valves found to be unacceptable and replace with a new valve.

Where no existing point of connection exists a live tap will be performed by AWWU for new mains up to twelve inches (12”) in diameter. New mains larger than twelve inches (12”) require the installation of a tee or cross.

AWWU will provide the staff, tapping machine, connection valve and valve box.

AWWU staff will complete the installation of the water main tap and new connection.

Contractor shall backfill around the tapped water main and new valve, and install the AWWU-furnished valve box assembly.

Contractor shall be responsible for all shoring, dewatering, disposal of unsuitable material, backfilling, and compaction effort.

During the execution of this effort, the Contractor shall maintain vehicular traffic and pedestrian access, as required in Division 10 – Standard General Provisions.

The Contractor shall restore the Work area to preconstruction conditions, as required by Division 10 – Standard General Provisions. Landscaping, paving and concrete work shall conform to Division 75 – Landscaping Improvements, Division 40 – Asphalt Surfacing, and Division 30 – Portland Cement Concrete, respectively, and the Standard Details.

The Contractor shall provide seventy-two (72) hours notice to the Engineer prior to anticipated flow interruption and/or physical connection to existing water systems to coordinate "turn-offs" with municipal crews. The actual connections shall be made only during periods of low water demand, as determined by the Owner.

The Contractor shall notify any property owners or residents, seventy-two (72) hours prior to interruption of any utility services. Disruption of water service to any structure shall be limited to six (6) hours in any twenty-four (24) hour period when authorized by the Engineer. Where the existing main line service to structures will be disrupted in excess of six (6) hours, the Contractor shall furnish and install a temporary water system. If the water service is disrupted in excess of six (6) hours, with or without the temporary water system, a penalty of $150 will be assessed per structure per violation within the twenty-four (24) hour period.

Construction of connections to existing water mains shall be in accordance with this Division and Section 60.02 - Furnish and Install Pipe.

The valve box shall be installed and adjusted to final grade by the Contractor.

Article 13.4 Measurement

Connect to existing water main shall be measured per each unit, complete in place.

Article 13.5 Basis of Payment

Payment for this Work shall be in accordance with Division 10, Section 10.07 - Measurement and Payment, and shall include full payment for all Work described in this Section.

Payment shall be made under the following unit:

ITEM	UNIT
Connect to Existing Water Main (Identify Location, Type of Pipe and Nominal Pipe Size)	Each

SECTION 60.14 REMOVE AND SALVAGE EXISTING FIRE HYDRANT

Article 14.1 General

The Work under this Section consists of removing and salvaging serviceable portions of existing fire hydrant assemblies identified in the Drawings and delivering them to AWWU's Operations Building at 325 East 94th Court, Anchorage, Alaska.

Article 14.2 Material

Materials used in this Work shall conform to the requirements of Section 60.02, Article 2.2 - Materials.

Article 14.3 Construction

The Contractor shall excavate, expose and remove the fire hydrant assemblies identified in the Drawings to be salvaged.

The hydrant assembly components to be removed and salvaged at each hydrant location where the hydrant is to be salvaged include:

Hydrant assembly (head, barrel, and shoe)
Hydrant gate valve
Hydrant gate valve box
Hydrant leg

Upon inspection of the exposed hydrant assembly components, the Engineer may determine that one or more of the components are not salvageable. These items are to be transported by the Contractor to a disposal site approved for disposal of construction debris.

The Contractor shall install a plug in the branch connection on the tee in the water main where the hydrant assembly is removed. If the water main is to remain in active service, the plug shall be tested for leakage according to Section 60.02, Article 2.4 – Flushing and Testing, prior to the water main being covered with fill. Disinfect the existing water main at the locations where the hydrant assemblies are removed per AWWA C651.

Excavation, shoring, dewatering, disposal of unsuitable material, backfilling, and compaction, shall all conform to the requirements of Division 20 – Earthwork.

During the execution of this effort, the Contractor shall maintain vehicular traffic and pedestrian access as required in Division 10 – Standard General Provisions.

The Contractor shall restore the Work area to preconstruction conditions as required by Division 10 – Standard General Provisions. Landscaping, paving and concrete work shall conform to Division 75 – Landscaping Improvements, Division 40 – Asphalt Surfacing and Division 30 – Portland Cement Concrete, respectively, and the Standard Details.

Article 14.4 Measurement

Removing, disposing of or salvaging, and delivery of existing fire hydrant serviceable portions will be measured per each fire hydrant removed and salvaged in accordance with this Section.

Article 14.5 Basis of Payment

Payment for this Work shall be in accordance with Division 10, Section 10.07 - Measurement and Payment, and shall include full payment for all Work described in this Section.

Payment shall be made under the following unit:

ITEM	UNIT
Remove and Salvage Existing Fire Hydrant	Each

SECTION 60.15 RELOCATE WATER MAIN

Article 15.1 General

The Work under this Section consists of providing all operations pertaining to relocating water mains. In the preparation of the Drawings, efforts have been made to determine exact elevations of live utilities; however, elevations of utilities shown are not represented as exact and are shown to include approximate location only. The Engineer shall have the final say as to whether the main is raised or lowered.

Article 15.2 Construction

Where a water main crosses the location of a sewer, the water main shall be raised or lowered sufficiently to permit a minimum (outside diameter) vertical distance of eighteen inches (18") from the sewer line. The Contractor may employ either of the following methods for raising or lowering a water main. He may raise or lower lengths of the water main as necessary on either side of the proposed sewer to allow the main to pass under or over the sewer, providing the deflection at any joint does not exceed the pipe manufacturer's recommendations, or the water main may be raised or lowered using four (4) pipe bends no to exceed twenty-two and one-half degrees (22 ½º). In special cases only, and when approved by the Engineer in advance, forty-five degree (45º) bends may be used. The method of lowering and materials to be used shall be approved by the Engineer prior to commencing Work. The Contractor shall give seventy-two (72) hours notice to AWWU and the Engineer prior to any planned water shutoff.

Article 15.3 Measurement

Raising or lowering existing water mains will be measured as units complete in place without regard to the diameter of the water main or length required to be lowered.

Article 15.4 Basis of Payment

Payment for this Work shall be in accordance with Division 10, Section 10.07 - Measurement and Payment, and shall include full payment for all Work described in this Section.

Payment shall be made under the following unit:

ITEM	UNIT
Relocate Water Main	Each

THIS PAGE INTENTIONALLY LEFT BLANK

SECTION 60.16 RAISE OR LOWER WATER SERVICE

Article 16.1 General

The Work under this Section consists of providing all operations pertaining to raising or lowering existing water services when the grade(s) of such services interfere(s) with the construction of new sanitary or storm sewers. The Work includes, but is not limited to, trench excavation and backfill, compaction, furnishing trench backfill, disposal of unsuitable or surplus material, and water service line piping.

Article 16.2 Materials

Materials to be used in the Work shall conform to Section 60.06, Article 6.2 - Material.

Article 16.3 Construction

Where a conflict in grade occurs between new storm and/or sanitary sewers, and an existing water service connection, the Contractor shall excavate the water service connection from the point of interception to a sufficient distance to raise or lower the water service such that the grade conflict will be eliminated. In no case will the length of raising or lowering of the water service exceed fifty feet (50').

If the clearance between the raised or lowered water service and the storm drain is less than three feet (3'), insulation board (R-20) shall be installed in accordance with Section 60.10, Article 1.4 - Insulation. However, in no case shall the vertical separation distance between the service connection and the storm drain and/or sanitary sewer be less than eighteen inches (18") without an ADEC separation waiver.

All excavation, backfill, and pipe laying shall be performed in accordance with the applicable provisions of Division 20 - Earthwork and this Division. Any materials needed to complete the raising or lowering of a water service shall be provided by Contractor and considered incidental to the Contract.

The existing water service shall be disinfected according to AWWA C651 prior to being place back in service.

Article 16.4 Measurement

Measurement for raising or lowering water service lines will be measured as units complete in place.

Fittings and appurtenances not specifically identified for payment under a separate pay item, but required for normal completion of raising or lowering water service lines will be considered incidental and shall be included in the unit cost of the Work.

Disinfection of the raised or lowered water service line shall be considered incidental and shall be included in the unit cost of the Work.

Any excavation, shoring, dewatering, disposal of unsuitable material, backfilling, compactive effort, maintenance of vehicular traffic and/or pedestrian access, paving, landscaping, or restoration of existing preconstruction conditions necessary to complete the Raise or Lower Water Service scope of Work identified in this Section that is not specifically addressed by a separate bid item shall be considered incidental to the Work completed under this Section. Costs incurred for completion of these incidental Work items are considered included in the unit cost bid for completion of the Work in this Section.

Article 16.5 Basis of Payment

Payment for this Work shall be in accordance with Division 10, Section 10.07 - Measurement and Payment, and shall include full payment for all Work described in this Section.

Payment shall be made under the following unit:

ITEM	UNIT
Raise or Lower Water Service	Each

SECTION 60.17 FURNISH AND INSTALL GALVANIC ANODES

Article 17.1 General

The Work under this Section consists of the performance of all Work required for furnishing and installing galvanic anodes for added protection of water pipe from corrosion. The Contractor shall install galvanic anodes in accordance with these specifications and in conformity with the detail shown on the Drawings, unless otherwise approved.

Article 17.2 Definitions

In these Contract Documents, the following words or expressions shall have the meaning given below:

AWG	American Wire Gauge
BDC	Bottom Dead Center of the Pipe
HMWPE	High Molecular Weight Polyethylene
NACE	National Association of Corrosion Engineers

Article 17.3 Materials

A. Anodes

Anodes utilized for typical galvanic anode system installation shall be prepackaged magnesium style anodes weighing twenty (20) pounds. Anode composition shall be in accordance with ASTM B843-2003 Table 1, Grade HP, M1C.

Anodes shall be packaged in a low resistive backfill consisting of seventy-five percent (75%) gypsum, twenty percent (20%) bentonite, and five percent (5%) sodium sulfate.

Anodes shall be provided with #10 AWG stranded copper, single-conductor cable with HMWPE insulation. Lead wire cable shall be rated for six hundred (600) volts and designed for direct burial applications.

B. Pipe Connection Lead Wire

Lead wires shall be of sufficient length for splice-free routing between the anode and the pipe and shall be #10 AWG stranded copper, single-conductor cable with HMWPE insulation. Lead wire cable shall be rated for six hundred (600) volts and designed for direct burial applications.

C. Thermite Welding Equipment and Materials

Equipment and materials used to bond the #10 AWG HMWPE to the pipeline shall be “CADWELD” type as manufactured by ERICO Products, Inc. of Cleveland, Ohio, or approved equal. Thermite weld caps, designed to protect the CADWELD bonds from corrosion, shall be Royston “Handy Cap 2” or approved equal.

Article 17.4 Installation

A. General Requirements

Excavation, shoring, dewatering, disposal of unsuitable material, backfilling, and compaction, shall all conform to the requirements of Division 20 – Earthwork.

During the execution of this effort, the Contractor shall maintain vehicular traffic and pedestrian access as required in Division 10 – Standard General Provisions.

The Contractor shall restore the Work area to preconstruction conditions as required by Division 10 – Standard General Provisions. Landscaping, paving and concrete work shall conform to Divisions 75 – Landscaping Improvements, Division 40 – Asphalt Surfacing, and Division 30 – Portland Cement Concrete, respectively, and the Standard Details.

B. Anode Installation

The following is a list of general procedures utilized for typical installation of galvanic anodes:

1. Anode Placement

Anodes shall be installed twelve to thirty-six inches (12” to 36”) from the side wall of the pipe, to a centerline depth in-line with the approximate horizontal plane of the pipe’s BDC. Anodes may be placed on either side of the pipeline, one anode per every pipe section (joint).

2. Lead Wire Connection to Pipe

The #10 AWG HMWPE lead wires shall be attached to the top dead center of the pipe. Lead wire connection to the pipe shall utilize exothermic weld connection methodology as outlined above and on the drawings. Contractor shall follow CADWELD manufacturer's instructions for use.

3. Backfilling

Extreme care shall be taken not to damage the anodes or direct buried lead wires during backfill procedures.

Article 17.5 Measurement

Measurement for furnishing and installing anodes shall be per each anode installed. The price shall include full compensation for furnishing and installing anodes as described herein and as shown on the Drawings.

Any excavation, shoring, dewatering, disposal of unsuitable material, backfilling, compactive effort, maintenance of vehicular traffic and/or pedestrian access, paving, landscaping, or restoration of existing preconstruction conditions necessary to complete the Furnish and Install of Galvanic Anodes scope of Work identified in this Section that is not specifically addressed by a separate bid item shall be considered incidental to the Work completed under this Section. Costs incurred for completion of these incidental Work items are considered included in the unit cost bid for completion of the Work in this Section.

Article 17.6 Basis of Payment

Payment for this Work shall be in accordance with Division 10, Section 10.07 - Measurement and Payment, and shall include full payment for all Work described in this Section.

Payment shall be made under the following unit:

ITEM	UNIT
Furnish and Install Anode	Each

SECTION 60.18 ABANDON PRIVATE WATER WELL

Article 18.1 Description

The Work under this Section consists of furnishing all material, labor, and equipment necessary to abandon existing private water wells as described in this Section.

The depths to the bottom of the boring, depth to static groundwater and locations of the wells to be abandoned are described in the Special Provisions.

Article 18.2 Materials and Construction

The Contractor shall use the following procedure when abandoning the wells:

1. Remove the existing well pump and appurtenances. The well pump and appurtenances shall be carefully removed to avoid damage and delivered to the property owner after removal.

2. Backfill the well casing to ten feet (10') above the screen with disinfected sand or gravel. Sand shall be used as backfill adjacent to water bearing strata consisting of sand, and gravel shall be used as backfill adjacent to water bearing strata consisting of gravel. Disinfected sand or gravel is defined as sand or gravel washed in a one part per million chlorine/water solution prior to the backfilling operation. The Contractor shall provide proof to the Engineer that any imported sand or gravel has been disinfected prior to backfilling the casing.

3. If the aquifer is pressurized, place a seal over the top of the disinfected sand or gravel to seal the aquifer. The seal may consist of bentonite chips or other suitable means, as approved by the Engineer.

4. Backfill the next section of well casing for a minimum distance of ten feet (10') with concrete or cement grout. If necessary, the depth of the concrete or cement grout may have to exceed ten feet (10') to ensure the lower aquifer is thoroughly sealed. The concrete or cement grout shall be placed from the bottom upward through a pipe or tremie in such a way as to avoid segregation or dilution of the material. The concrete or cement grout shall be allowed thirty-six (36) hours to cure prior to proceeding with the next step.

5. Backfill the next section of well casing to fifteen feet (15') below the ground surface with gravel. Disinfected gravel is not required in this zone.

6. Excavate the area adjacent to the top of the well to a depth of five feet (5') and cut the casing at this level. Then backfill the remaining ten feet (10') of well casing with bentonite, concrete, or cement grout. Weld a metal cap on top of the well casing to ensure the well is sealed.

7. Backfill the area within a two foot (2') minimum radius from the center of the well casing to a level which is two inches (2") above the top of the sealed well casing with concrete or cement grout to preclude the downward migration of water along the outside of the casing. Then backfill the remainder of the excavated hole with native soils.

8. As part of this bid item, the Contractor shall be responsible for topsoil and reseeding all lawn areas damaged by the Contractor during the well abandonment operation. In addition, the Contractor shall be responsible for the repair and/or replacement of all existing utilities, driveways, trees, utility markers, survey monuments, fences, retaining walls, buildings, sidewalks, gardens, landscaping, and other private improvements damaged by the Contractor as a result of the well abandonment operation.

9. The Contractor shall provide a log of the well abandonment to the Engineer prior to receiving final payment for this Work. The log shall describe the materials used in the abandonment and the depths below existing grade each type of material was used, in addition to any other pertinent information regarding the abandonment.

The Contractor may employ, at his/her option, an alternate method of abandoning the wells that conforms to the requirements of ANSI/AWWA Standard A 100. In the event the Contractor elects to obtain approval to employ an alternate method, he/she shall first secure the approval of the ADEC and then submit a Substitution Request form to the Engineer for approval. The substitution request shall clearly identify the method the Contractor wishes to employ; clearly reference applicable sections of ANSI/AWWA Standard A 100 which allow the Contractor's proposed method of abandonment; and, include written approval from the ADEC specific for these particular walls.

Excavation, shoring, dewatering, disposal of unsuitable material, backfilling, and compaction, shall all conform to the requirements of Division 20 – Earthwork.

During the execution of this effort, the Contractor shall maintain vehicular traffic and pedestrian access as required in Division 10 – Standard General Provisions.

The Contractor shall restore the Work area to preconstruction conditions as required by Division 10 – Standard General Provisions. Landscaping, paving and concrete work shall conform to Division 75 – Landscaping Improvements, Division 40 – Asphalt Surfacing, and Division 30 – Portland Cement Concrete respectively, and the Standard Details.

Article 18.3 Measurement

Measurement for payment shall be per each well abandoned in accordance with the requirements of this Section or ADEC requirements if an alternate method of well abandonment is employed and approved by the Engineer.

Any excavation, shoring, dewatering, disposal of unsuitable material, backfilling, compactive effort, maintenance of vehicular traffic and/or pedestrian access, paving,

landscaping, or restoration of existing preconstruction conditions necessary to complete the Abandon Existing Private Water Well scope of Work identified in this Section that is not specifically addressed by a separate bid item shall be considered incidental to the Work completed under this Section. Costs incurred for completion of these incidental Work items are considered included in the unit cost bid for completion of the Work in this Section.

Article 18.4 Basis of Payment

Payment for this Work shall be in accordance with Division 10, Section 10.07 - Measurement and Payment, and shall include full payment for all Work described in this Section.

Payment shall be made under the following unit:

ITEM	UNIT
Abandon Private Water Well	Each

SECTION 60.19 ADJUST KEY BOX

Article 19.1 General

The Work under this Section consists of providing all materials, equipment and labor and performing all operations necessary for adjusting existing key boxes to finished height and/or finished grade. All broken and/or missing keybox components are to be replaced with new materials furnished and installed by the Contractor in accordance with these specifications.

Article 19.2 Material

All materials used in the key box adjustment shall conform to the requirements defined in Section 60.06 - Water Service Lines and the Standard Details.

Article 19.3 Construction

Key boxes to be adjusted will be identified by the Engineer. In all cases the maximum height of the adjusted key box will be flush with the final ground surface. If excavation is required to adjust the key box, the ground surface will be restored to its original condition unless otherwise indicated in the Drawings. The Contractor shall be responsible for ensuring that the valve box is vertical, clean, to proper grade, and readily accessible for operation of the valve.

Any damage to a key box resulting from construction under this Contract shall be repaired or the damaged portion replaced at the Contractor's expense. Adjustments to key boxes to be lowered will include cutting excessive length of key box, threading, and installing threaded unions to complete adjustments. Only threaded joints will be allowed. "Quick-connect" style connections assembled with set screws will not be accepted.

Where key box is located in concrete slab, adjustment will include cutting concrete, installing pavement riser and lid, and restoring disturbed area to original condition.

Contractor shall adjust the valve box to finish grade prior to placement of asphalt pavement. After-the-fact cutting of new asphalt for adjustments is not accepted. Any adjustment(s) requiring cutting of new asphalt shall not be paid and shall be deducted from the quantity.

Article 19.4 Measurement

Adjusting key boxes will be measured per unit, complete in place.

Article 19.5 Basis of Payment

Payment for this Work shall be in accordance with Division 10, Section 10.07 – Measurement and Payment, and shall include full payment for all Work described in this Section.

Payment shall be made under the following unit:

ITEM	UNIT
Adjust Key Box	Each
Adjust Key Box (Concrete Slab or Asphalt Paving)	Each

SECTION 60.20 ADJUST VALVE BOX TO FINISH GRADE

Article 20.1 General

The Work under this Section consists of providing all operations pertaining to adjustment of existing mainline or hydrant valve boxes to finish grade, including the replacement of any and all broken valve box sections, lids, and dust pans.

Article 20.2 Material

All materials used in the adjustment of mainline valve boxes shall conform to the requirements of the utility company having jurisdiction over the water system.

Article 20.3 Construction

All valve box adjustments will be accomplished as directed by the Engineer. During the adjustment of the valve boxes, the top section will be replaced with a new top section, dust pan, and lid market "water," per the water utility specifications. Any salvaged top sections will be identified by the Engineer. All salvaged top sections will be delivered to the AWWU Warehouse by the Contractor. Any damage to a mainline valve box resulting from construction under this contract shall be repaired or the damaged portion replaced at the Contractor's expense. The Contractor shall be responsible for ensuring that the valve box is vertical, clean, to proper grade, and readily accessible for operation of the valve.

Contractor shall adjust the valve box to finish grade prior to placement of asphalt pavement. After-the-fact cutting of new asphalt for adjustments is not accepted. Any adjustment(s) requiring cutting of new asphalt shall not be paid and shall be deducted from the quantity.

Article 20.4 Measurement

Mainline valve box adjustments will be measured per unit, complete in place.

Article 20.5 Basis of Payment

Payment for this Work shall be in accordance with Division 10, Section 10.07 - Measurement and Payment, and shall include full payment for all Work described in this Section.

Payment shall be made under the following unit:

ITEM	UNIT
Adjust Valve Box to Finish Grade	EACH

MUNICIPALITY OF ANCHORAGE
STANDARD SPECIFICATIONS

DIVISION 60
WATER SYSTEMS
STANDARD DETAILS

STANDARD CONSTRUCTION SPECIFICATIONS
MISCELLANEOUS
DIVISION 60
INDEX OF STANDARD DETAILS

60-1	MJ Cap and Plug
60-2	Thrust Block
60-3	Typical Valve Box
60-4	Single Pumper “L” Base Fire Hydrant Assembly
60-5	Double Pumper “L” Base Fire Hydrant Assembly
60-6	Fire Hydrant Guard Posts
60-7	Water Service Connect - 1”
60-8	Water Service Connect - 1-1/2” and 2”
60-9	Irrigation System
60-10	Connecting Ductile Iron Pipe to Ductile Iron Pipe
60-11	Typical Pipe Angle Marker
60-12	Relocate Water Main (Storm Drain)
60-13	Anode Detail
60-14	Adjust Service Key Box

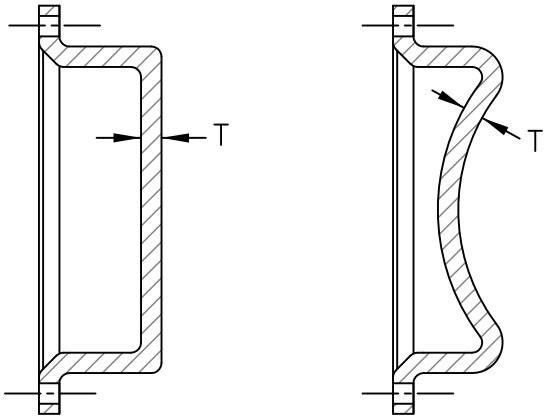

4"–12" 14"–48"

MJ CAP

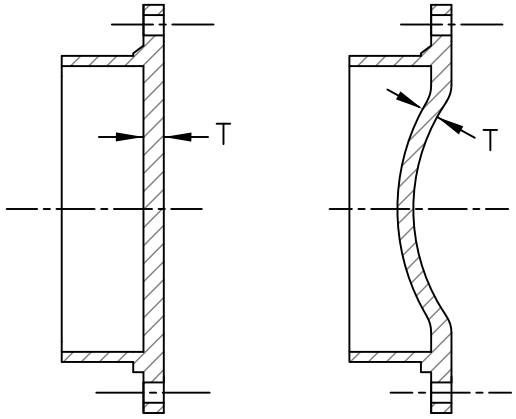

4"–12" 14"–48"

MJ PLUG

NOTES:

1. MECHANICAL JOINT RESTRAINT EBAA IRON MEGALUG® OR EQUAL.
2. COST OF THIS FITTING TO BE INCLUDED IN BID PRICE OF PIPE.
3. T = THICKNESS PER AWWA C110 OR C153 STANDARDS.

REVISION: 12/09 ADDED NOTE 3, 3/12 ADDED C153 TO NOTE 3

MUNICIPALITY OF ANCHORAGE	SCALE: NTS APPROVED: REVISED: 3/12	MJ CAP AND PLUG	SECTION # 60.02 DETAIL # 60–1

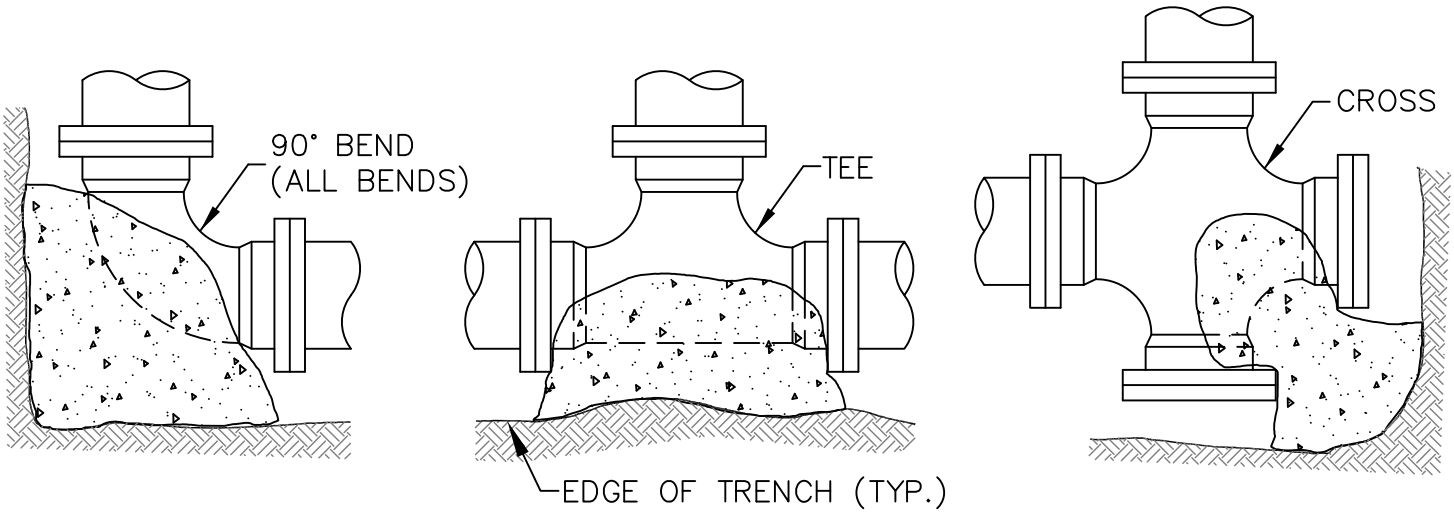

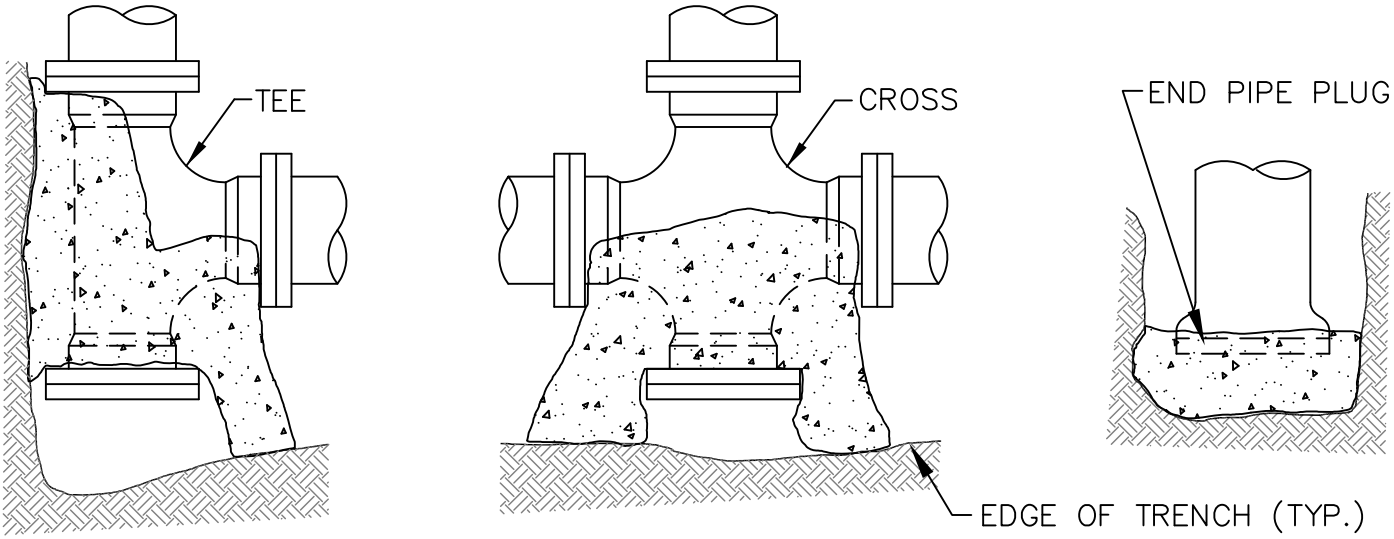

MINIMUM BASE AREA SQUARE FEET				
PIPE SIZE	PLUG	90° BEND	45° BEND	22 1/2° BEND
6"	2.0	2.0	1	1
8"	2.5	2.5	1.5	1.5
10"	4.5	4.5	2.5	2.5
12"	6	6	3.5	3.5
14"	8	8	4.5	4.5
16"	10.5	10.5	6	6
24"	24	24	13	13

NOTES:

1. MINIMUM THICKNESS OF PRE-CAST CONCRETE THRUST BLOCKS SHALL BE 6-INCH OR PER THE CONTRACT SPECIFICATIONS, AND IN CONFORMANCE WITH DIVISION 30.
2. THRUST BLOCK MAY NOT BE USED IN LIEU OF THRUST RESTRAINT.
3. THRUST BLOCK MUST BE CAST AGAINST UNDISTURBED SOIL (HATCH).

REVISION: 12/09 MODIFIED NOTE 3, 3/12 MODIFIED NOTE 3

MUNICIPALITY OF ANCHORAGE

SCALE: NTS

APPROVED:

REVISED: 3/12

THRUST BLOCK

SECTION # 60.02

DETAIL # 60-2

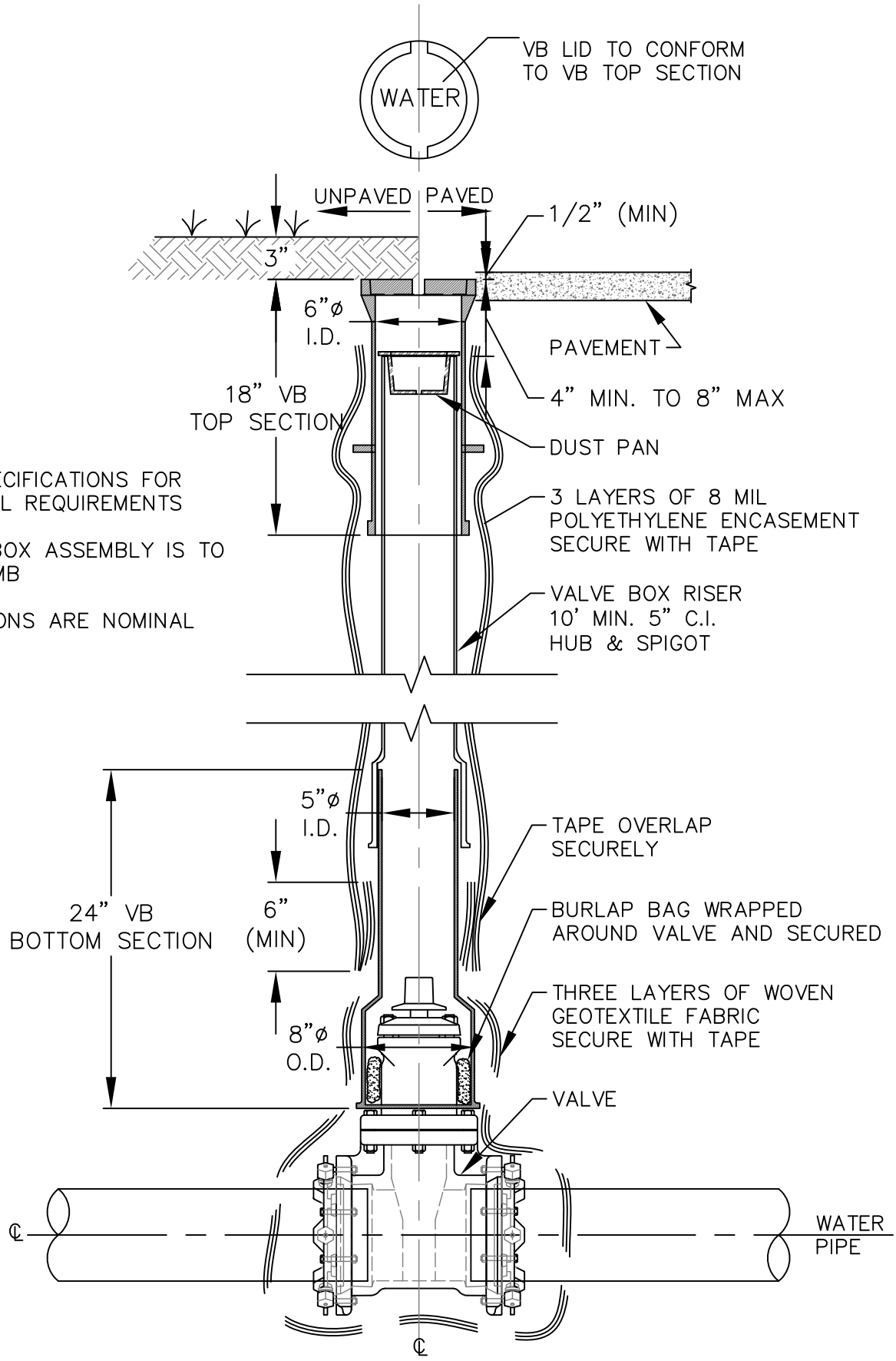

NOTES:

1. SEE SPECIFICATIONS FOR MATERIAL REQUIREMENTS
2. VALVE BOX ASSEMBLY IS TO BE PLUMB
3. DIMENSIONS ARE NOMINAL

REVISION: 1/12 CHANGED VB SLEEVE TO VB RISER 1/13 REDRAFTED

MUNICIPALITY OF ANCHORAGE	SCALE: NTS APPROVED: REVISED: 1/13	**TYPICAL VALVE BOX**	SECTION # 60.03 DETAIL # 60–3

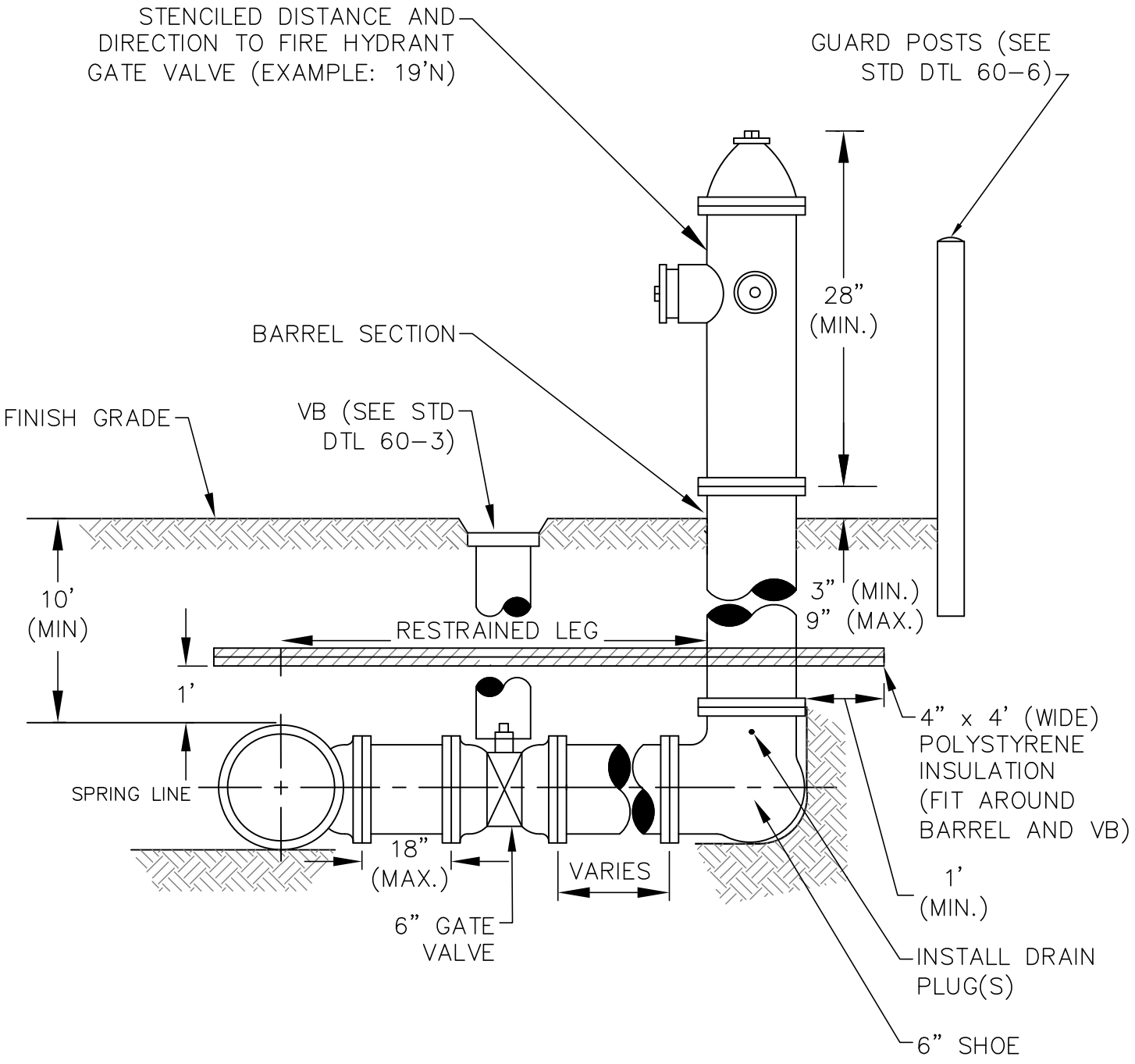

NOTES:

1. HYDRANT BARREL SHALL BE INSTALLED PLUMB AND THE LEG SHALL BE LEVEL.
2. ALL BACKFILL MATERIAL AROUND HYDRANT BARREL SHALL BE NFS.

MUNICIPALITY OF ANCHORAGE	SCALE: NTS APPROVED: REVISED: 1/13	**SINGLE PUMPER "L" BASE FIRE HYDRANT ASSEMBLY**	SECTION # 60.04 DETAIL # 60-4

REVISION: 3/12 ADDED NOTE 7, ADDED 28" MIN TO HEIGHT 1/13 REDRAFTED

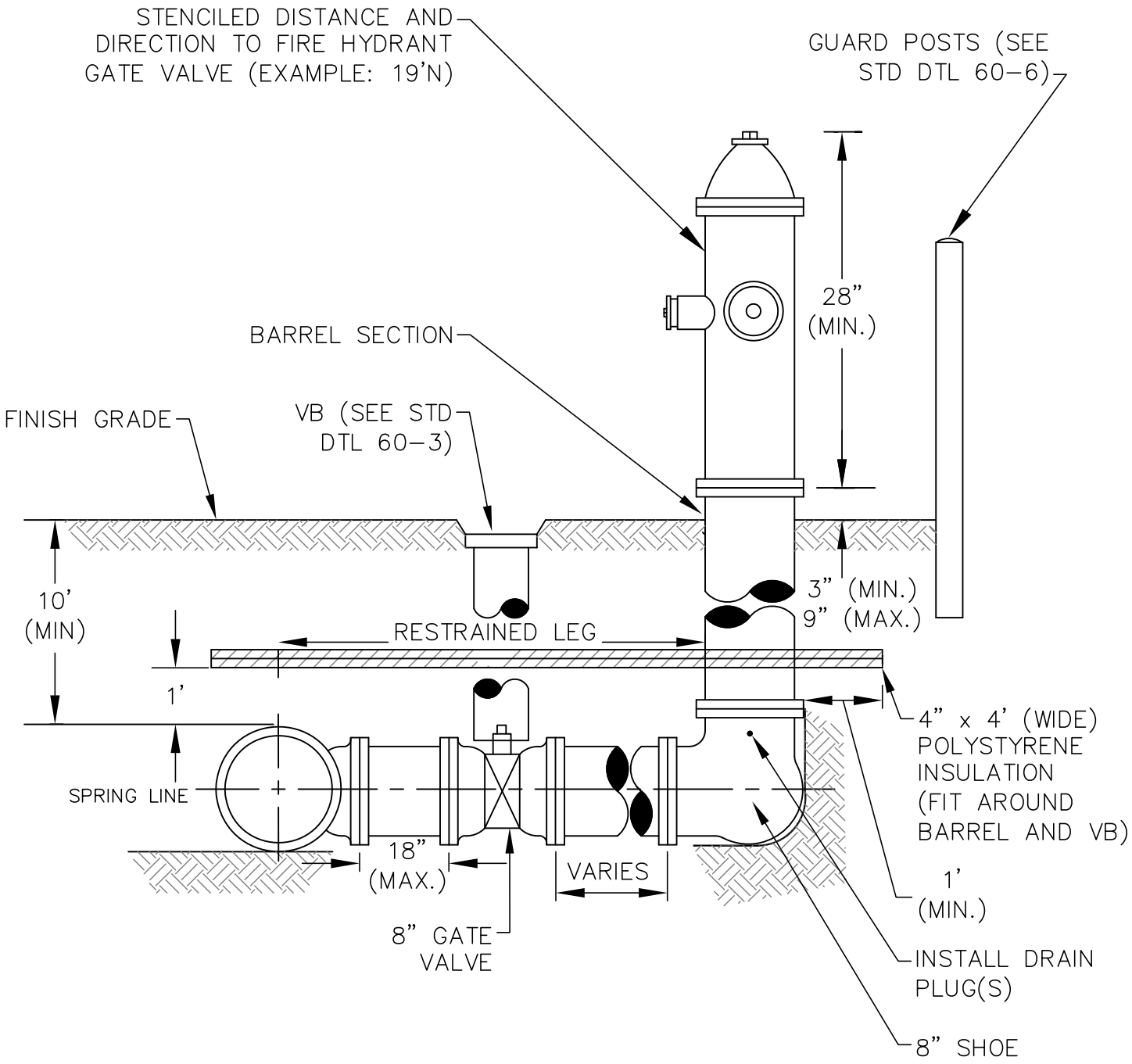

NOTES:

1. HYDRANT BARREL SHALL BE INSTALLED PLUMB AND THE LEG SHALL BE LEVEL.
2. ALL BACKFILL MATERIAL AROUND HYDRANT BARREL SHALL BE NFS.

MUNICIPALITY OF ANCHORAGE	SCALE: NTS APPROVED: REVISED: 1/13	**DOUBLE PUMPER "L" BASE FIRE HYDRANT ASSEMBLY**	SECTION # 60.04 DETAIL # 60-5

REVISION: 3/12 ADDED NOTE 7, ADDED 28" MIN TO HEIGHT 1/13 REDRAFTED

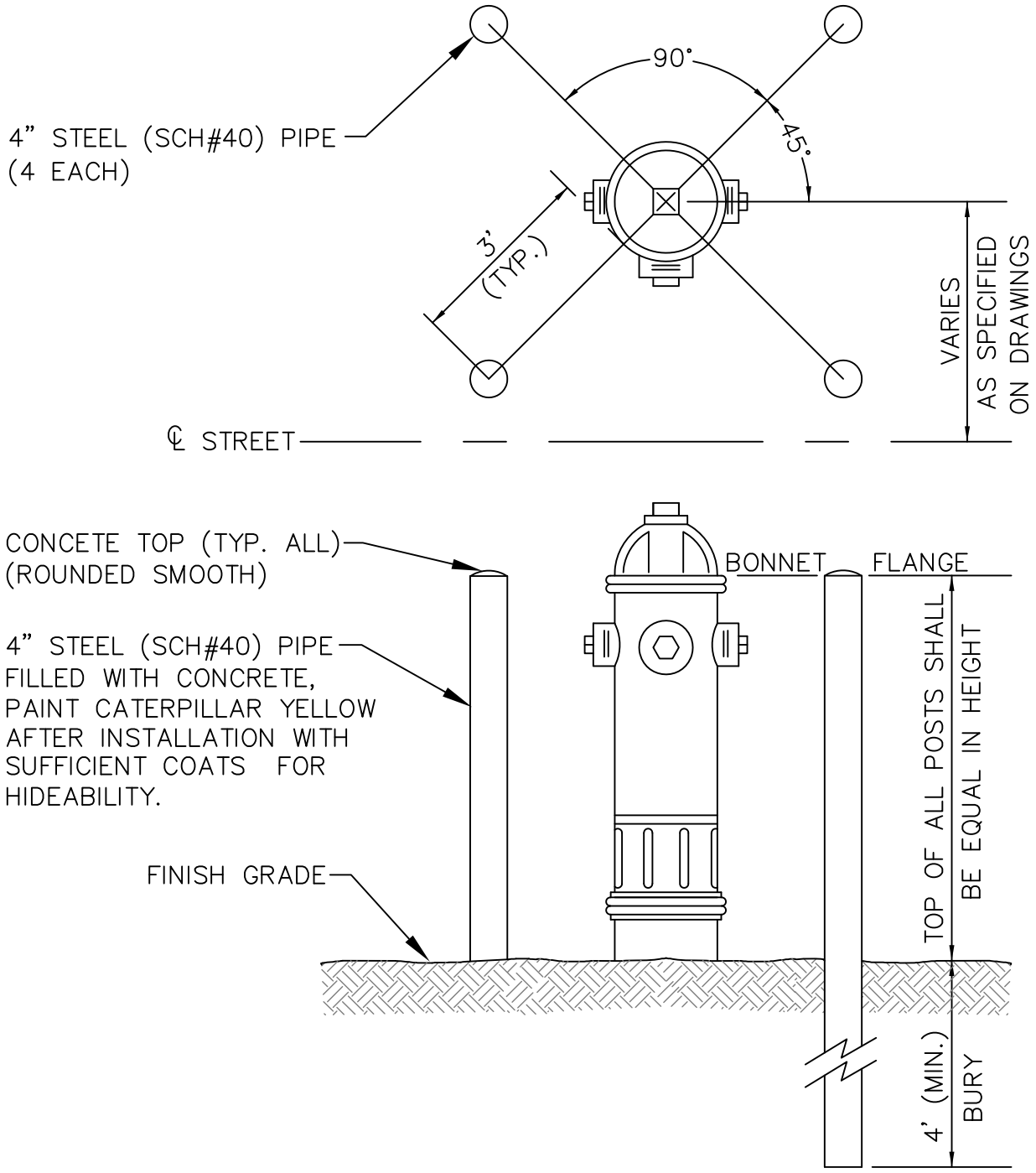

NOTES:

1. GUARD POSTS WILL BE FURNISHED & INSTALLED BY THE CONTRACTOR AND APPROVED BY THE ENGINEER.
2. GUARD POSTS SHALL BE INSTALLED PLUMB AND LOCATED TO ALLOW UNRESTRICTED ACCESS TO PUMPER AND HOSE CONNECTIONS.

REVISION: 3/12 REMOVED NOTE 3

MUNICIPALITY OF ANCHORAGE	SCALE: NTS APPROVED: REVISED: 3/12	FIRE HYDRANT GUARD POSTS	SECTION # 60.04 DETAIL # 60–6

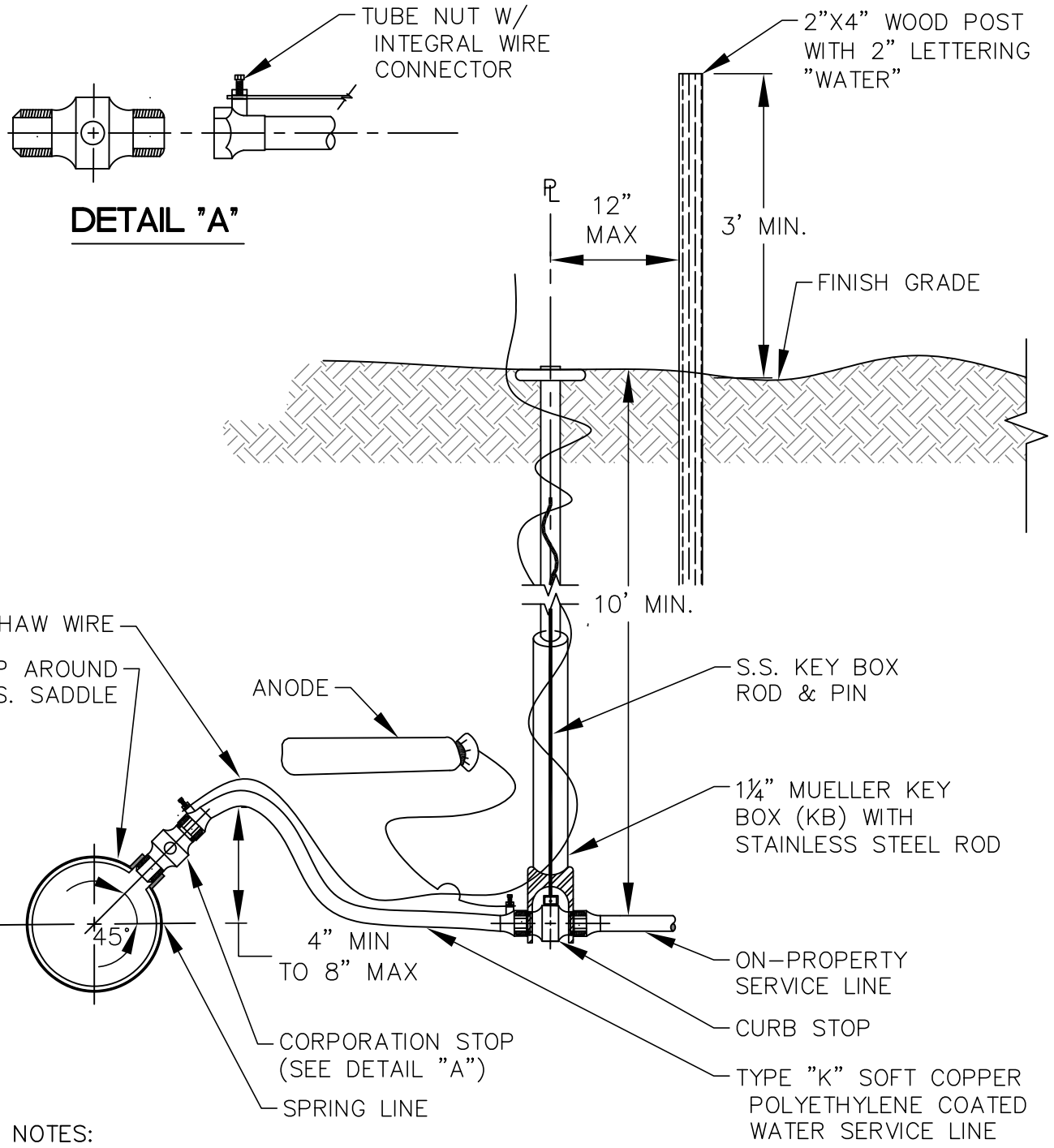

NOTES:

1. STAINLESS STEEL (SS) WRAP AROUND SERVICE SADDLE TO BE USED ON ALL TAPS. PVC TAPS MUST BE A MINIMUM OF 3' APART

2. THAW WIRE IS TO BE #2 GAUGE HMWPE INSULATED COPPER WIRE THAT IS LAID PARALLEL TO THE SERVICE LINE WITHOUT CONTACTING THE SERVICE LINE.

MUNICIPALITY OF ANCHORAGE	SCALE: NTS APPROVED: REVISED: 1/13	**WATER SERVICE CONNECT 1"**	SECTION # 60.06 DETAIL # 60-7

REVISION: 12/09 MODIFIED NOTE 6; 3/12 ADDED ANODE, MODIFIED NOTES 5&6 1/13 REDRAFTED

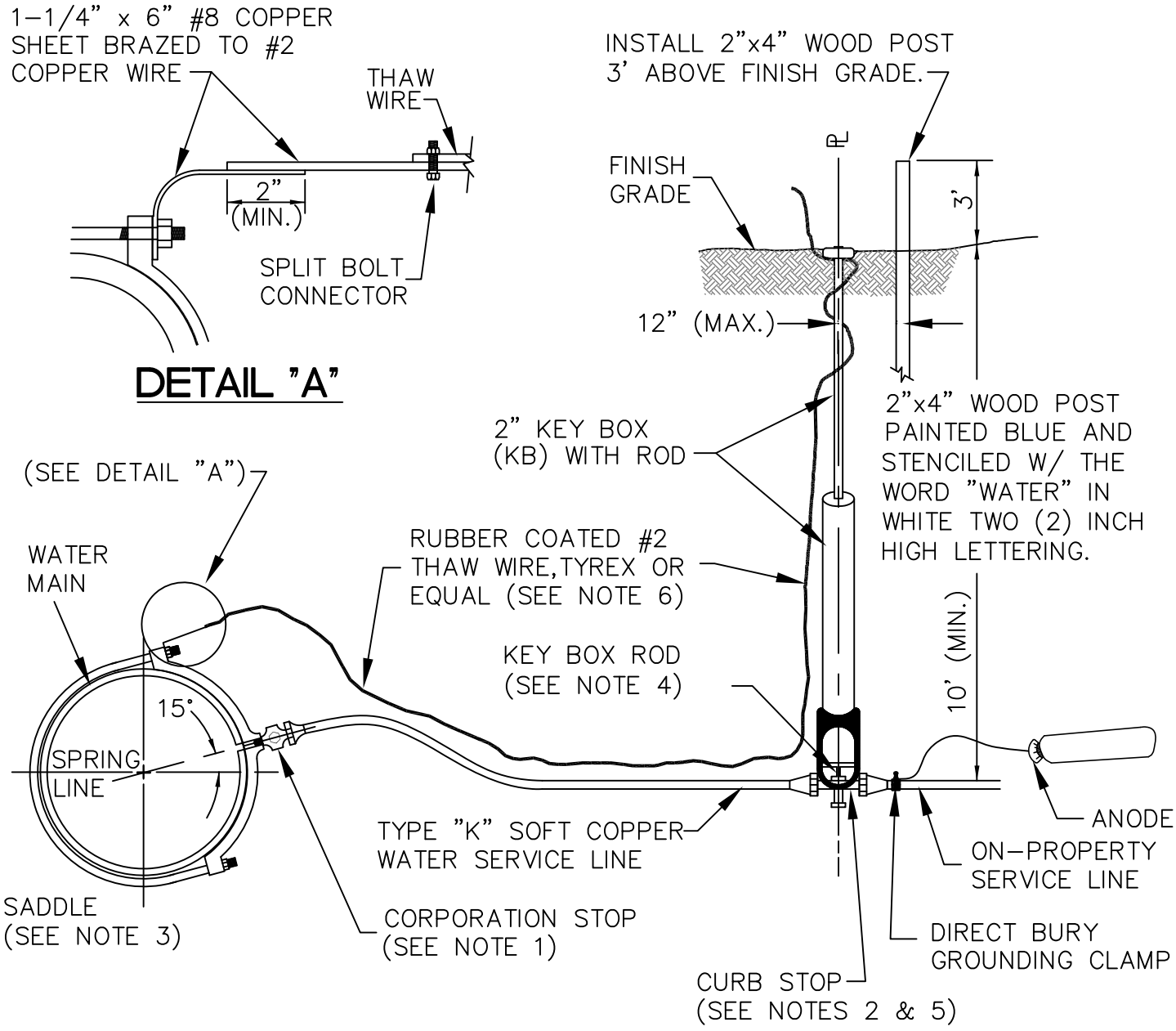

NOTES:

1. USE MUELLER CORPORATION STOP NO. 15025 OR EQUAL.
2. USE MUELLER CURB STOP NO. H15184 ORISEAL OR EQUAL FOR COPPER TO IRON CONNECTIONS.
3. WRAP AROUND STAINLESS STEEL SERVICE SADDLE SHALL BE USED ON ALL PIPE.
4. KB ROD TO BE ATTACHED TO CURB STOP WITH 4" STAINLESS STEEL COTTER PIN, NO SUBSTITUTIONS (MANUFACTURERS COTTER PIN SHALL NOT BE USED).
5. USE MUELLER CURB STOP NO. H15214 ORISEAL OR EQUAL.
6. THAW WIRE TO BE PLACED PARALLEL TO THE SERVICE LINE AND SHALL NOT COME IN CONTACT WITH THE SERVICE LINE AT ANY LOCATION.

MUNICIPALITY OF ANCHORAGE	SCALE: NTS APPROVED: REVISED: 3/12	**WATER SERVICE CONNECT 1-1/2" AND 2"**	SECTION # 60.06 DETAIL # 60–8

REVISION: 3/12 ADDED ANODE & DIRECT BURY GROUNDING CLAMP, EDITED NOTE 4

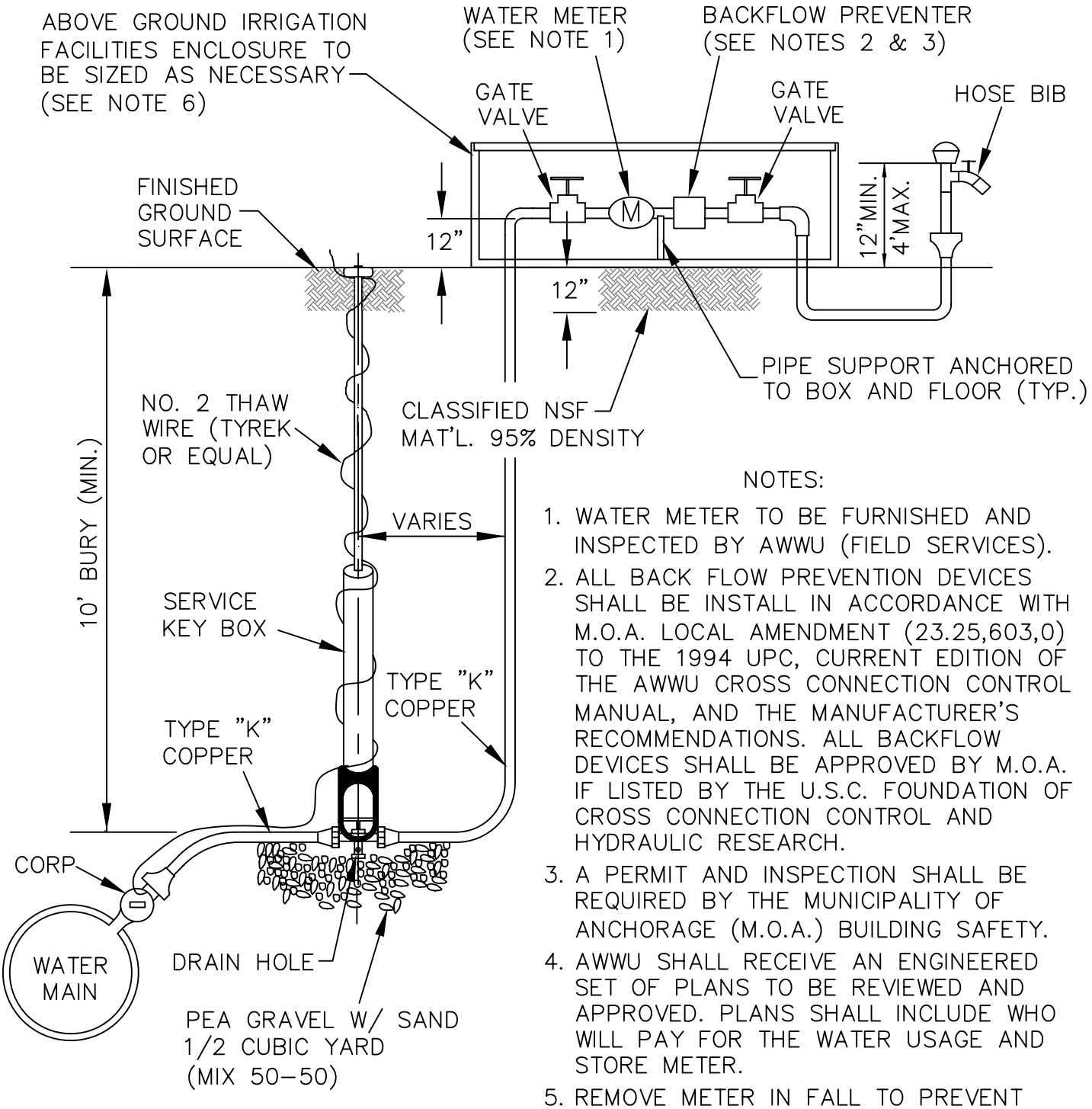

NOTES:

1. WATER METER TO BE FURNISHED AND INSPECTED BY AWWU (FIELD SERVICES).
2. ALL BACK FLOW PREVENTION DEVICES SHALL BE INSTALL IN ACCORDANCE WITH M.O.A. LOCAL AMENDMENT (23.25,603,0) TO THE 1994 UPC, CURRENT EDITION OF THE AWWU CROSS CONNECTION CONTROL MANUAL, AND THE MANUFACTURER'S RECOMMENDATIONS. ALL BACKFLOW DEVICES SHALL BE APPROVED BY M.O.A. IF LISTED BY THE U.S.C. FOUNDATION OF CROSS CONNECTION CONTROL AND HYDRAULIC RESEARCH.
3. A PERMIT AND INSPECTION SHALL BE REQUIRED BY THE MUNICIPALITY OF ANCHORAGE (M.O.A.) BUILDING SAFETY.
4. AWWU SHALL RECEIVE AN ENGINEERED SET OF PLANS TO BE REVIEWED AND APPROVED. PLANS SHALL INCLUDE WHO WILL PAY FOR THE WATER USAGE AND STORE METER.
5. REMOVE METER IN FALL TO PREVENT FREEZE-UP.

IRRIGATION FACILITIES ENCLOSURE

6. FOR SECURITY AND PROTECTION, IT IS RECOMMENDED THAT THE ENCLOSURE BE FABRICATED WITH 1-1/2"x 1-1/2" ANGLE IRON (FRAME) COVERED W/ FLAT EXPANDED METAL (MESH) PRIMED AND PAINTED. ENCLOSURE SHALL BE SIZED TO ENCLOSE ALL ABOVE FINISH GRADE APPURTENANCES AND SHALL PROVIDE ADEQUATE DRAINAGE TO KEEP THE BACKFLOW PREVENTER FROM BECOMING SUBMERGED.

MUNICIPALITY OF ANCHORAGE	SCALE: NTS APPROVED: REVISED: 10/07	IRRIGATION SYSTEM	SECTION # MISC. DETAIL # 60-9

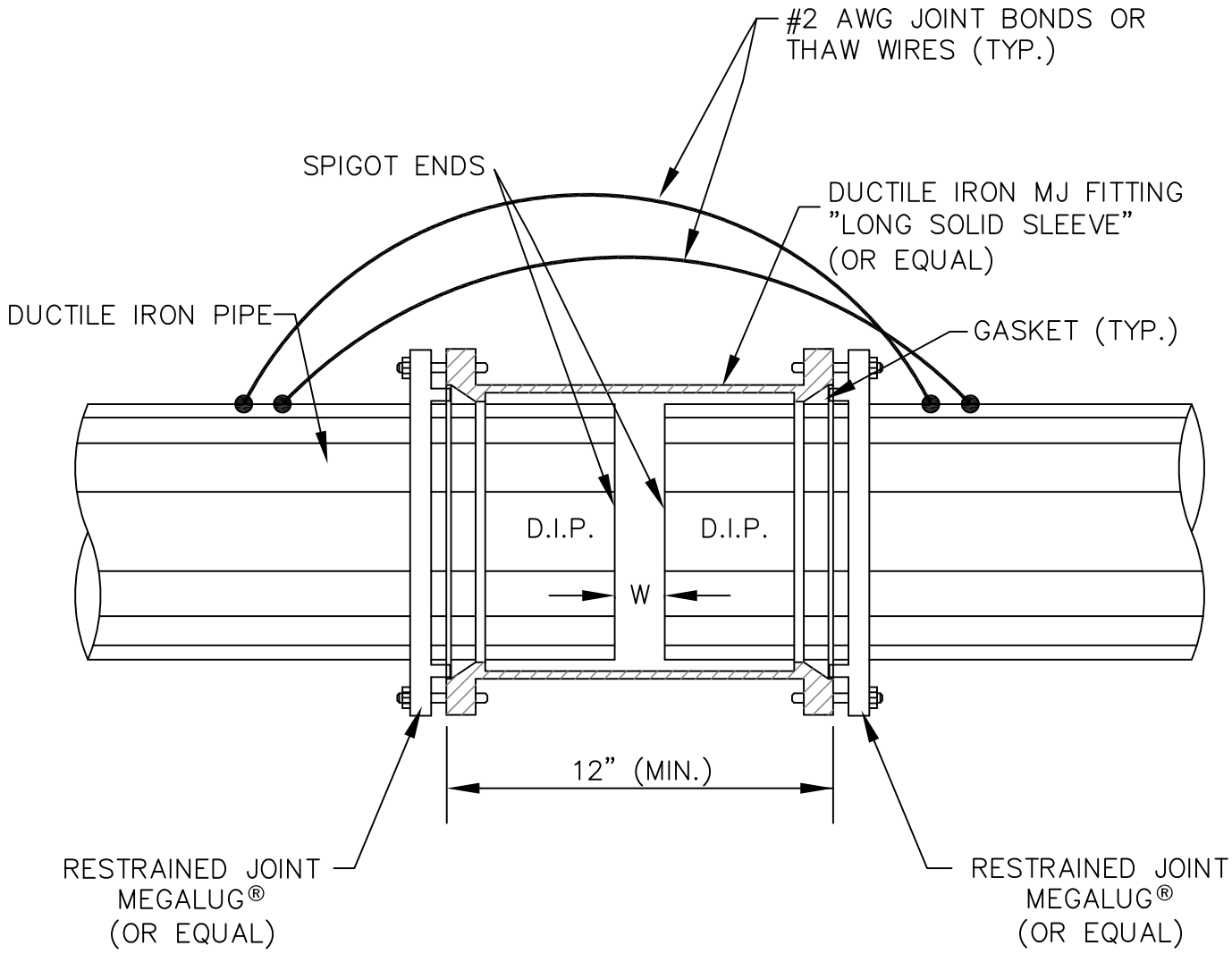

NOTES:

1. MECHANICAL JOINT (MJ) LONG SOLID SLEEVE SHALL BE USED TO CONNECT SAME SIZE (O.D.) DUCTILE IRON PIPE (D.I.P.) TO D.I.P. ONLY.
2. SEE MANUFACTURERS RECOMENDATIONS FOR DIMENSION "W"
3. ALL D.I.P. FITTINGS SHALL CONFORM TO THE REQUIREMENTS OF AWWA C110 OR C153 (SEE SECTION 60.02 – FURNISH AND INSTALL PIPE)

REVISION: 3/12 EDITED NOTE 3

MUNICIPALITY OF ANCHORAGE	SCALE: NTS APPROVED: REVISED: 3/12	CONNECTING DUCTILE IRON PIPE TO DUCTILE IRON PIPE	SECTION # 60.02 DETAIL # 60–10

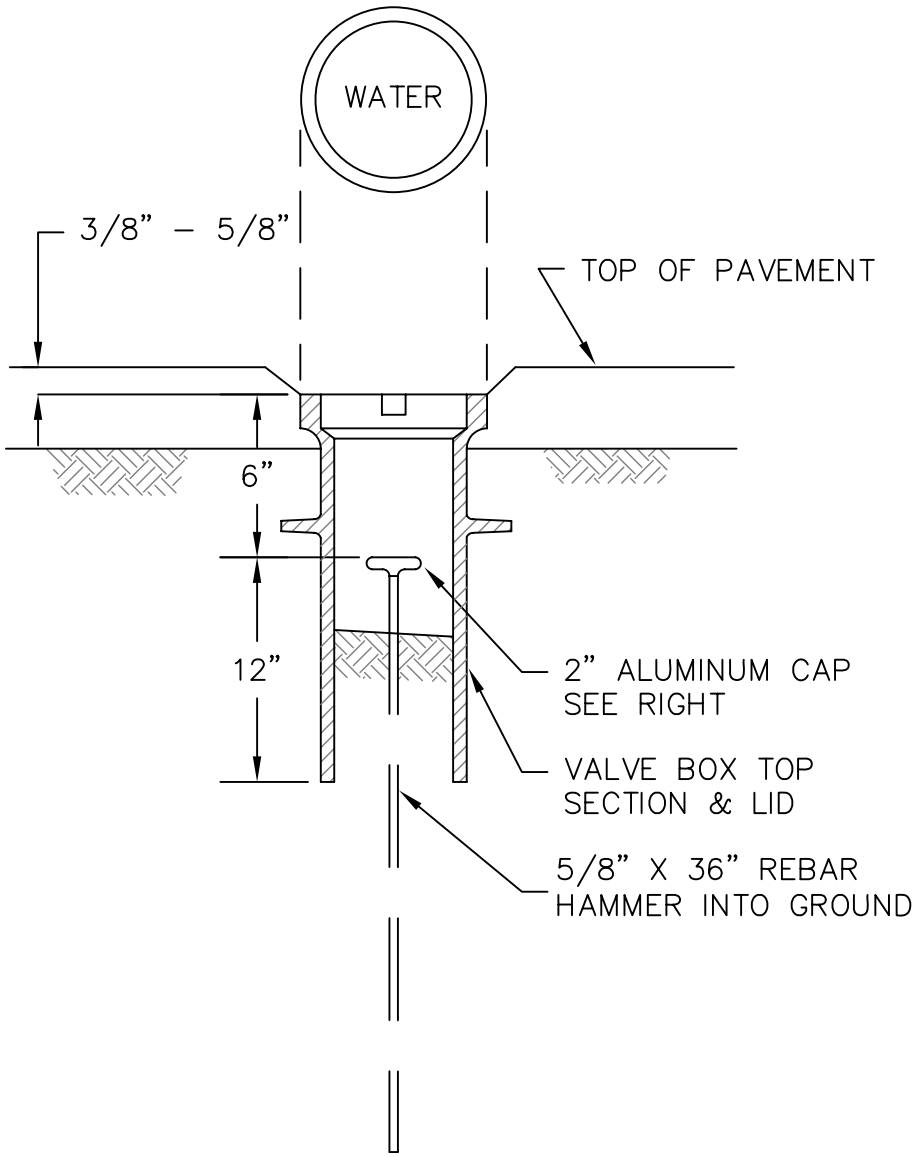

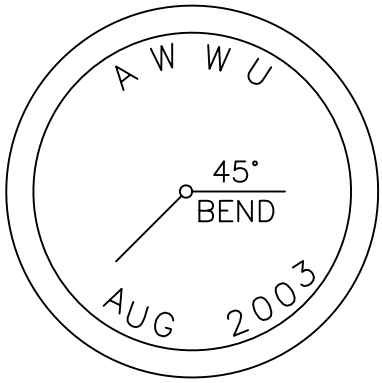

2" ALUMINUM CAP

NOTE: BEND SHOWN ON ALUMINUM CAP SHALL MATCH ACTUAL INSTALLED WATER MAIN BEND.

MUNICIPALITY OF ANCHORAGE	SCALE: NTS APPROVED: REVISED: 10/07	**TYPICAL PIPE ANGLE MARKER**	SECTION # 60.02 DETAIL # 60–11

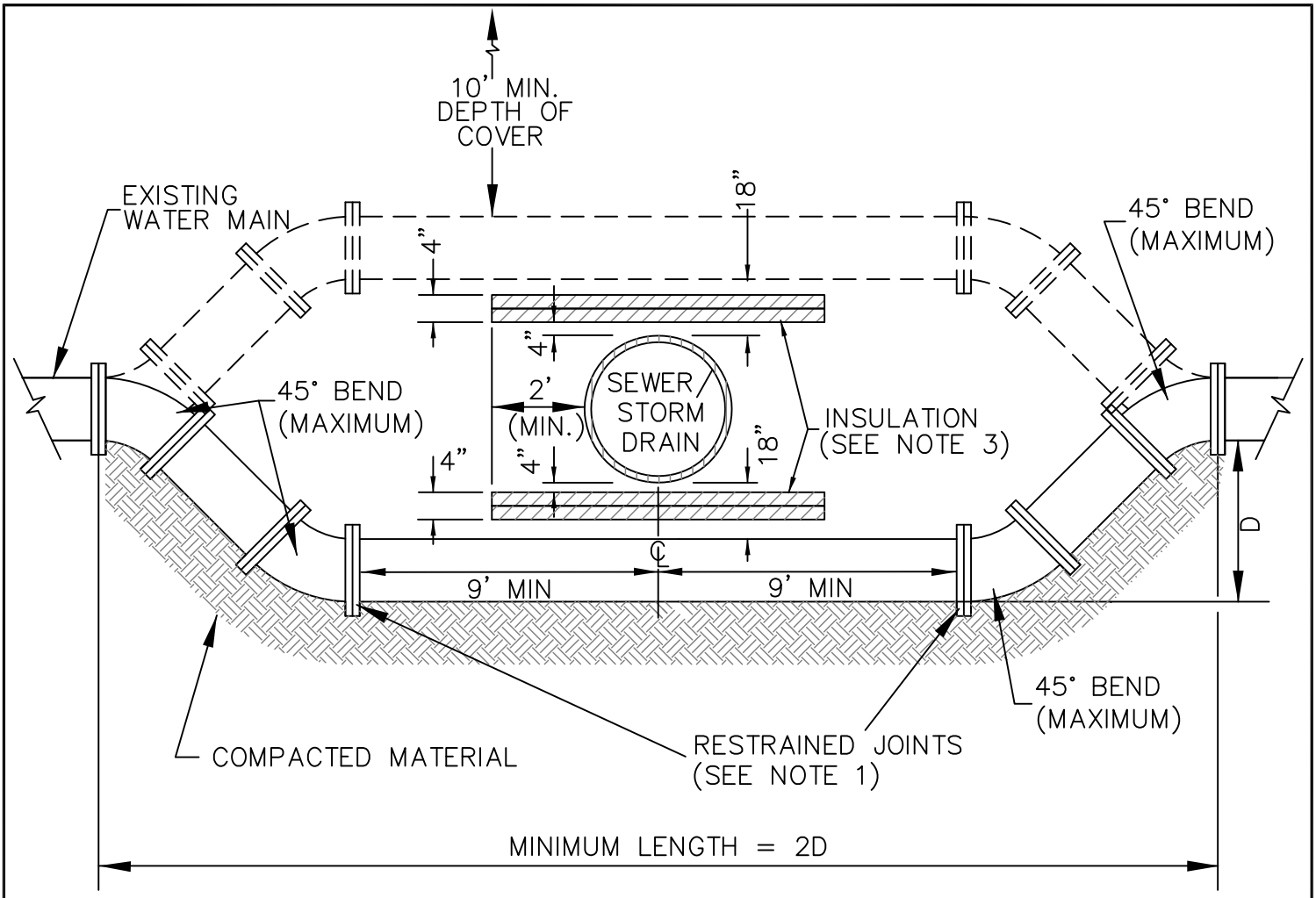

NOTES:

1. ALL PIPE AND FITTINGS SHALL BE RESTRAINED BY USE OF MEGALUG® AND/OR FIELD LOK® GASKETS OR EQUAL.
2. RELOCATED WATER MAIN SHALL HAVE A MINIMUM SEPARATION OF THIRTY–SIX INCHES (36") BETWEEN STORM AND WATER. IF THIRTY–SIX INCHES (36") OF SEPARATION CANNOT BE OBTAINED, THEN FOUR INCHES (4") OF INSULATION IS REQUIRED. IF EIGHTEEN INCHES (18") OF SEPARATION CANNOT BE MAINTAINED BETWEEN WATER AND SEWER OR STORM AN ADEC WAIVER IS REQUIRED.
3. RIGID BOARD INSULATION SHALL BE HIGH DENSITY POLYSTYRENE, MIN. 60 P.S.I., EQUIVALENT TO R–20 PER FOUR INCH (4") THICKNESS. INSULATION SHALL BE BE POSITIONED NO LESS THAN OR EQUAL TO FOUR INCHES (4") FROM STORM SEWER.
4. ALL MATERIALS USED TO RELOCATE WATER LINE SHALL BE APPROVED BY THE AWWU ENGINEER.

REVISION: 12/09 ADDED SEWER TO TITLE, 1/12 ADDED 9' DIMENSIONS, MODIFIED INSULATION REQUIREMENT, EDITED NOTES

MUNICIPALITY OF ANCHORAGE	SCALE: NTS APPROVED: REVISED: 3/12	**RELOCATE WATER MAIN (SEWER/STORM DRAIN)**	SECTION # 60.15 DETAIL # 60–12

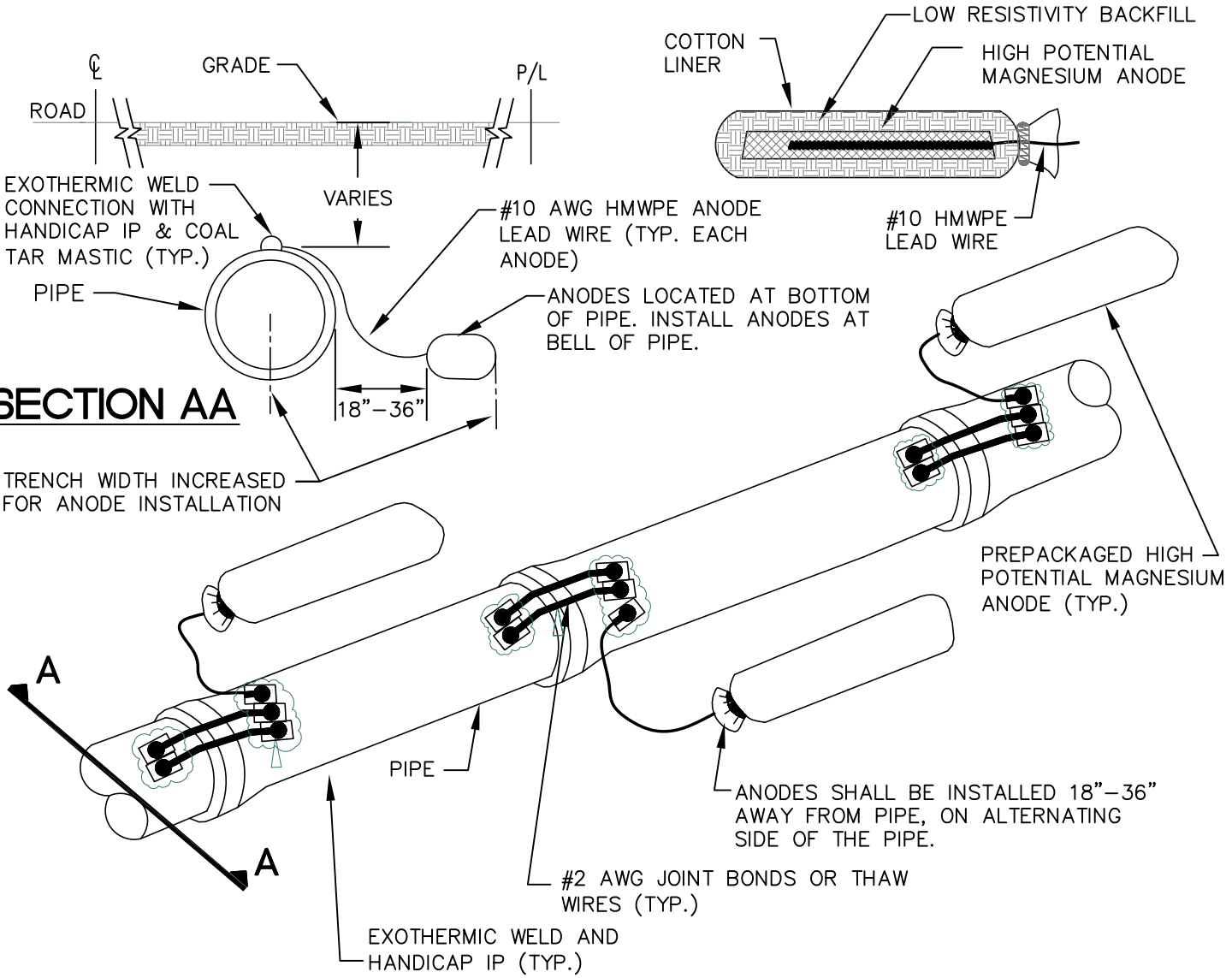

NOTES:

1. HIGH POTENTIAL MAGNESIUM ANODES SHALL BE PREPACKAGED IN A CLOTH BAG WITH A BACKFILL MIXTURE OF 75% GYPSUM, 20% BENTONITE AND 5% SODIUM SULFATE. THE ANODES SHALL HAVE A 20 lb. BARE WEIGHT AND APPROXIMATELY 70 lb. PACKAGED WEIGHT.
2. ANODES SHALL BE INSTALLED AT A MAXIMUM SPACING OF 18 FEET OF BURIED PIPE BETWEEN ANODES. AN ANODE IS REQUIRED ON THE FIRST AND LAST JOINT OF PIPE. TWO (2) ADDITIONAL ANODES MUST BE INSTALLED ON THE EXISTING TIE–IN PIPE.
3. CONTRACTOR SHALL PROVIDE COORDINATES OR PIPE STATIONING FOR EACH ANODE INSTALLED.
4. TWO #2 AWG THAW WIRES ARE REQUIRED WHEN ANODE INSTALLATIONS ARE REQUIRED.
5. ALL CABLES SHALL BE SINGLE CONDUCTOR, STRANDED COPPER, WITH TYPE HMWPE INSULATION RATED FOR 600 VOLTS.
6. SPLIT–BOLT CONNECTIONS SHALL NOT BE ALLOWED ON ANY UNDERGROUND CONDUCTORS. IF SPLICES ARE REQUIRED, COMPRESSION CONNECTIONS (BURNDY OR APPROVED EQUAL) SHALL BE USED. COMPRESSION CONNECTIONS SHALL BE SEALED WITH A HEAT SHRINK SLEEVE RATED FOR BELOW GRADE USE.
7. EXOTHERMIC WELDS SHALL BE MADE IN STRICT ACCORDANCE WITH THE MANUFACTURER'S RECOMMENDATIONS (NOTE: COPPER CONDUCTOR SLEEVES ARE REQUIRED FOR #10 WIRE BY SOME MANUFACTURERS). THE EXOTHERMIC WELD AREA SHALL BE COATED WITH HANDICAP IP OR EQUAL AND ANY BASE METAL EXPOSED AFTER INSTALLATION OF HANDICAP IP MUST BE COATED WITH COAL TAR MASTIC.
8. AT FIRE HYDRANT LOCATIONS, INSTALL ONE ANODE (18"–36" AWAY FROM THE PIPE) AT THE MIDPOINT BETWEEN THE TEE FROM THE MAIN LINE PIPE AND THE HYDRANT SHOE.

MUNICIPALITY OF ANCHORAGE	SCALE: NTS APPROVED: REVISED: 1/12	ANODE DETAIL	SECTION # 60.19 DETAIL # 60–13

REVISION: 1/12 ADDED HANDICAP IP INFO, INCREASED SPACING & UPDATED WELD INFO

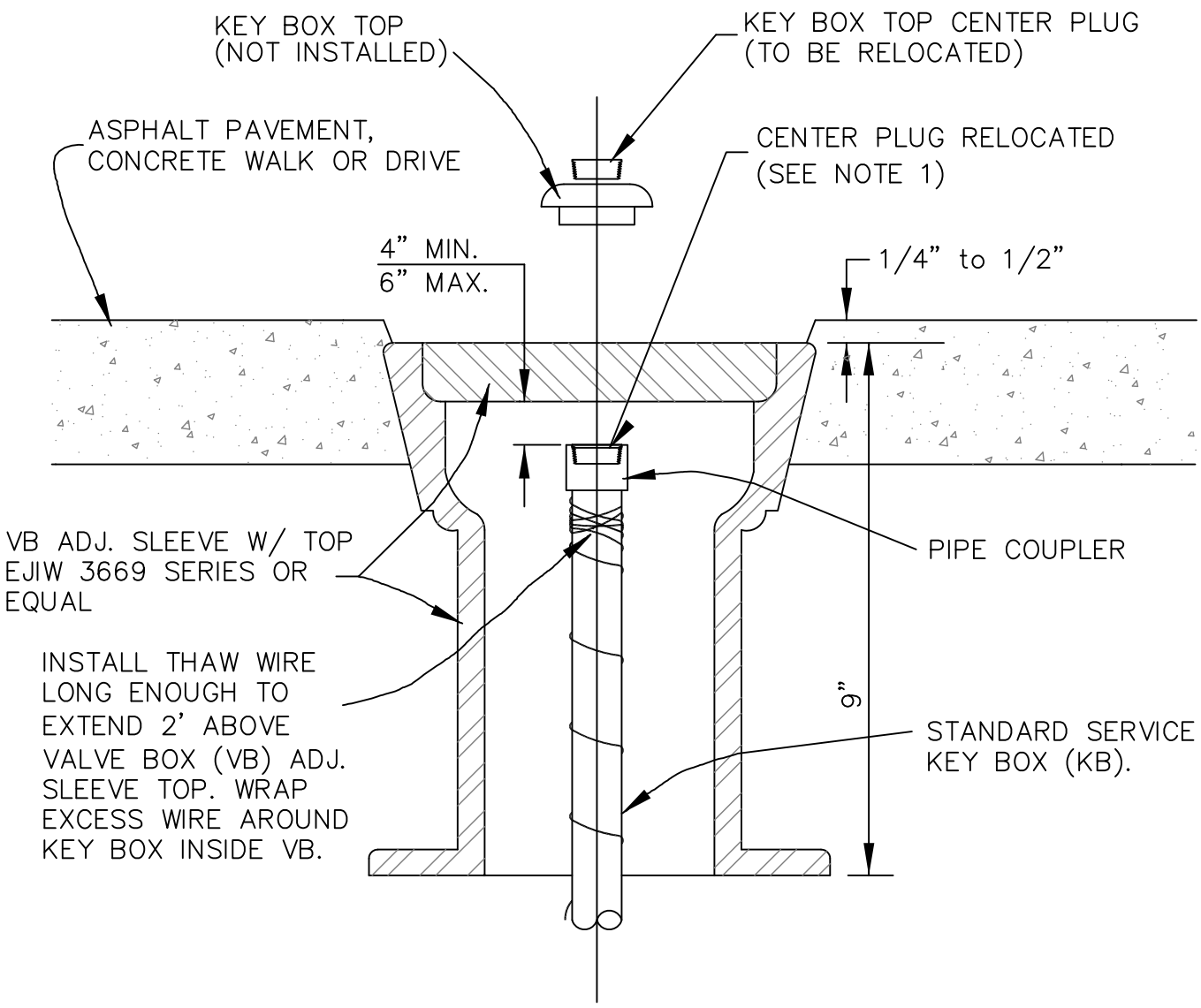

NOTES:

1. REMOVE KEY BOX TOP AND INSTALL PIPE COUPLING ON STANDARD KEY BOX, REMOVE CENTER PLUG FROM KEY BOX TOP AND INSTALL INTO TOP OF PIPE COUPLER.
2. TYPICAL INSTALLATION WHEN KEY BOX FALLS WITHIN ASPHALT PAVEMENT, CONCRETE WALK OR DRIVEWAY.
3. TO BE INSTALLED AND APPROVED BY THE ENGINEER.
4. ALL BACKFILL MATERIAL AROUND VALVE BOX SHALL BE NFS AND COMPACTED TO 95% MAX. DENSITY.
5. WRAP VALVE BOX ADJUSTMENT SLEEVE WITH THREE LAYERS OF 8–MIL THICK POLYETHYLENE ENCASEMENT MATERIAL.

REVISION: 3/12 ADDED NOTE 5

MUNICIPALITY OF ANCHORAGE	SCALE: NTS APPROVED: REVISED: 3/12	ADJUST SERVICE KEY BOX	SECTION # 60.19 DETAIL # 60–14

MUNICIPALITY OF ANCHORAGE
STANDARD SPECIFICATIONS

DIVISION 65
CONSTRUCTION SURVEY

STANDARD CONSTRUCTION SPECIFICATIONS
FOR MUNICIPAL CONSTRUCTION SURVEYS
DIVISION 65
INDEX

SECTION 65.01	GENERAL	1
Article 1.1	Scope of Work	1
Article 1.2	Payment - General	1
SECTION 65.02	CONSTRUCTION SURVEYING	2
Article 2.1	Project Control	2
Article 2.2	Field Notes	6
Article 2.3	Party Chief's Daily Diary	7
Article 2.4	Clearing and Grubbing Stakes	8
Article 2.5	Cross Sections	8
Article 2.6	Slope Stakes	10
Article 2.7	Grade Stakes	11
Article 2.8	Drainage Facilities	12
Article 2.9	Water Systems	13
Article 2.10	Sanitary Sewer Systems	13
Article 2.11	Major Structures	14
Article 2.12	Miscellaneous Construction	14
Article 2.13	Electronic Data Collection and Radial Surveys	14
Article 2.14	As-built Surveys and Record Drawings	15
Article 2.15	Method of Measurement	16
Article 2.16	Basis of Payment	17

STANDARD CONSTRUCTION SPECIFICATIONS
FOR MUNICIPAL CONSTRUCTION SURVEYS
DIVISION 65

SECTION 65.01 GENERAL

Article 1.1 Scope of Work

The Contractor shall furnish all labor and materials necessary to perform all surveying and staking essential for the completion of construction in conformance with the Drawings, Specifications, and Contract Documents. The Contractor shall perform all the necessary Work and calculations required to accomplish the Work in accordance with this Division.

This Section establishes a minimum standard of field survey specifications and procedures to properly control Municipal construction projects. The Contractor shall insure that commonly accepted practice of survey methods and procedures are followed. Errors or damages resulting from the Contractor's survey shall be corrected or made whole at the expense of the Contractor. The Owner shall not be held liable for any additional expense. Any method conflicting with these survey specifications must be approved by the Engineer prior to its use.

An Alaskan Registered Professional Surveyor, subcontracted to the Contractor shall perform all surveying, monumentation, staking and cross section for quantities pay item measurements. All personnel involved in measuring and recording survey data shall be directly employed by the Surveying Subcontractor and shall not be employed by the Contractor or any of the other Subcontractors for the duration of the project. Failure to adhere to this specification will result in non-payment for all Work affected by non-compliance.

The Contractor shall notify the Engineer twenty-four (24) hours in advance prior to beginning Work. All requests for information or determinations concerning the project shall be directed to the Engineer.

Article 1.2 Payment - General

Payment for this Work shall be in accordance with Division 10, Section 10.07 - Measurement and Payment, and shall include full payment for all Work described in this Section.

SECTION 65.02 CONSTRUCTION SURVEYING

Article 2.1 Project Control

The Owner may provide project horizontal and vertical control monuments to facilitate construction staking or the Owner may not have provided horizontal and vertical control monuments for a project. Regardless, the Contractor shall recover project survey control monuments shown on the Drawings or establish project survey control monuments to ensure the project is properly located and constructed according to the Contract Documents.

Survey control monuments may be shown on the Drawings. Prior to construction, the Contractor shall locate these monuments to ensure they have not been destroyed. In the event the Contractor is unable to locate certain monuments, the Contractor shall notify the Engineer immediately and provide five (5) working days for the Engineer to reestablish the missing monumentation.

The Contractor shall have no basis for a claim requesting additional compensation for costs incurred due to missing survey control which is shown on the Drawings, unless the Engineer fails to reestablish said control within five (5) working days after written notification from Contractor. The Contractor may be entitled an extension of time as the Engineer may determine. Claim for extension of time shall be in accordance with Division 10, Section 10.05, Article 5.23 - Delays and Extension of Time.

The Contractor shall notify the Engineer immediately if a discrepancy exists between the field conditions and the Contract Documents. Project staking, which would be directly affected by the discrepancy, shall cease until further notice by the Engineer. Work unaffected by the discrepancy shall continue uninterrupted.

The Contractor is responsible for preserving, protecting and replacing all monuments and lot corners, line stakes, grade stakes, reference points, and hubs. In the event of their loss or destruction, the Contractor shall pay all costs for their replacement.

A. Monuments

1. General Description

A monument is defined as a material object used to physically identify a measured point on the earth's surface, representing a land boundary that was determined by a land survey. The term "monument" will be deemed generic to identify public land corners, private property corners and public agency vertical and horizontal control monuments. If a question arises as to the validity of a found object being a monument, it should be submitted to the Engineer for clarification prior to disturbance or removal.

2. Existing Monument and Lot Corner Search

Contractor shall perform a monument search and make a record of the monument and lot corner search in the survey control field book, before commencement of construction staking. The monument search shall include both centerline and property monumentation.

Prior to construction, Contractor shall locate and verify all project survey control monuments shown on the Drawings to ensure that they have not been disturbed or destroyed. In the event the Contractor is unable to locate any survey control monument that is shown on the Drawings, the Contractor shall notify the Engineer immediately. The Engineer shall have five working days to reestablish the missing monument or make a determination whether the project can be accurately staked without the missing monument.

Prior to construction, the field book record of the monument and lot corner search shall state which monuments were found and which were not found. Contractor shall obtain record plats within the construction limits to assist in the search.

Upon completion of the project, Contractor shall search for and replace all monuments and lot corners that have been lost due to the construction project unless the Contractor can show that the monument or lot corner was searched for and none existed prior to construction.

The requirement to search for existing monuments and lot corners is governed by a separate pay item in the Bid Schedule shall be measured and paid as identified in Article 2.15 – Method of Measurement and Article 2.16 – Basis of Payment.

3. Requirement to File Record of Monument or Record of Survey

Per Alaska Statute (AS 34.65.040): 'A land surveyor who in the course of a survey establishes, reestablishes, uses as control, or restores a monument to make it readily identifiable or reasonably durable shall record a monument record, unless the monument and its accessories are substantially as described in a monument record filed or recorded under this chapter or on a survey plat of record'.

Contractor shall provide to the Office of the Municipal Surveyor Monument of Record Forms (MORF) for each monument which has been replaced upon completion of the project. A sample MORF document can be found at http://www.muni.org/Departments/works/project_management/Pages/Publications.aspx At the discretion of the Municipal Surveyor, these monument records shall be incorporated into a Record of Survey produced by the project design engineer or the Contractor shall be required to record these MORF forms with the State of Alaska recorder's office.

B. Requirement to Establish Monuments

1. General

The Contractor shall replace any monument that exists within the construction limits if it is disturbed or removed due to project activity. All monumentation disturbed or removed shall be replaced with the same type monument or monument approved by the Engineer. All monuments that are replaced shall be crowned with a self identifying cap bearing the surveyor's license number, year set, the lot, block and subdivision name stamped into the cap. No plastic monument caps are allowed. Should a physical impediment prevent a monument from being reestablished at its original location, one or more reference monuments shall be established. The establishment of reference marks shall be coordinated with the Engineer.

2. Centerline Monumentation for Road Improvement Projects

Projects which include paving or repaving of the road surface shall establish monuments installed in a monument case at all project centerline PCs, PTs, angle points, and street intersections. Monuments established to identify street intersections, angle points, and PCs/PTs of curves shall be center punched and stamped with the following information:

- centerline stationing
- year set
- surveyor's license number
- the initials "M.O.A."

Monuments that are located in gravel road surfaces, fill slopes, back slopes or ditches shall be installed six inches (6") below the finished surface.

Existing subdivision lot corner monuments located within paved portions of a public use easement shall be replaced with a like monument installed flush with the top of finished pavement grade.

3. Utility Projects Within the Road Right Of Way

Maintenance and utility projects including storm drains, traffic signalization/channelization and gravel surface re-grading and reshaping projects, do not require the establishment of new monumentation. However, in accordance with SubArticle B.1 - General. above, the Contractor is responsible for replacing any existing monuments disturbed or removed during the Work.

4. Standard Monument and Monument Case Specifications

The standard monument is a five-eighths by thirty inch (5/8" x 30") iron rebar with a two inch (2") aluminum cap attached. The monument case shall conform to AASHTO M-105, Class 30A or DOT/PF Standard Drawing M-16.01. The case shall be coated with coal-tar pitch varnish. The top of the case shall be installed flush with the pavement surface. The top of a monument installed in a case shall be four-tenths feet (0.4') below the top of the case.

5. Request to Install Additional Monumentation

The Owner may request that additional monumentation be established and installed. Additional monumentation is extra to the project and not identified in the Contract Documents. The monuments would be established and installed according to SubArticles B.1 - General and B.4 - Standard Monument and Monument Case Specifications above.

This Work is governed by a separate pay item in the Bid Schedule and is separate from the lump sum construction survey pay item listed in Article 2.16. The measurement for this pay item is identified in Article 2.15 Method of Measurement.

C. Project Control Accuracy

1. Horizontal Control

The maximum permissible linear error allowed in establishing horizontal control is 1:10,000 feet. The maximum error allowed in unadjusted angular closure shall be calculated by the formula "15 times the square root of N." The term "N" signifies the number of transit setups in a traverse and "15" signifies fifteen seconds.

2. Vertical Control

Vertical datum shall originate from the MOA Benchmark Network or NGS Vertical Level Line System. All level circuits run to establish temporary bench marks shall have an accuracy no less than the value computed by the equation (three-hundredths feet (0.03') times the square root of the distance

in miles). Foresights and backsights shall be balanced. The maximum sighting distance shall not exceed three hundred feet (300'). All leveling circuits establishing TBMs will be adjusted utilizing recognized standard surveying adjustment methods. Side shots to establish an elevation on TBMs will not be allowed.

A minimum of two known bench marks shall be utilized when establishing TBMs to verify correct elevation information. A sufficient number of TBMs shall be set to control a project with a maximum spacing of eight hundred feet (800') between marks. Typically, a TBM should not be greater than two hundred feet (200') outside the construction limits of the project. All TBMs shall be located and be comprised of sufficient materials such that their integrity will not be compromised throughout the life of the project.

D. Construction Centerline

1. Establish Centerline

The construction centerline location and stationing shall conform to that shown on the Drawings. Any errors found in the line shall be corrected and shown on the specific plan view with reference to the centerline stationing. If control points do not exist they shall be established and referenced so that the line can be readily re-established when required. A minimum of two reference points shall be established to reference each project control point or monument. Each reference point shall be visible to the other reference point. The method of referencing control points shall be done in accordance to the Standard Details of these specifications. Reference points shall be placed at locations where there is the least possibility of their being disturbed during the construction period. Measurements and sketches of the reference points shall be kept in the horizontal control survey field book.

2. Check Existing Ground Profile

A centerline profile shall be run prior to establishing construction grade stakes. The existing ground elevations shall be checked against the existing profile elevations shown on the Drawings to verify design grade relative to the existing ground conditions. The Contractor shall review the centerline profile information and immediately notify the Engineer of any elevations that do not match the plan profile information. The Engineer will direct the Contractor how to proceed.

3. Pavement Rehabilitation Projects

This paragraph pertains only to pavement rehabilitation projects when a field survey of existing conditions was not conducted as part of the design process for the project. Contractor shall conduct a preconstruction survey to establish the existing road centerline and gutter lip profiles as applicable, within five working days prior to beginning construction staking, Contractor shall submit the survey field notes and a centerline profile plot drawn on vellum drawing paper at the same scale as the Drawing scale to the Engineer. The Engineer will have five days to review the survey notes and profile drawings prior to the start of construction.

Article 2.2 Field Notes

The Contractor shall furnish hardbound field books for recording survey information; the field books shall become the property of the Municipality after the survey information has been entered and the project has been completed. At the discretion of the Municipal Surveyor, scanned copies of these field books may be submitted in lieu of the hardbound books. Scanned field books must be clean, readable, and in Adobe Portable Document Format (PDF).

Each book shall be indexed and its contents referred to by page number prior to delivering them to the Owner. All field books containing field note information shall be sealed and signed by an Alaskan Registered Professional Land Surveyor on the title page of each field book. The date, weather conditions, survey crew personnel, and instruments used shall be shown at the beginning of each day's notes. As a general rule, field notes for each phase of the Work shall be placed in a separate series of field books. Field notes shall conform to the note format shown in the Standard Details and shall be neatly logged as follows:

- observations recorded directly in field book.
- complete an index page in the front of the book with specific references to pages where monument recovery, horizontal and vertical control were established for the project, cut/fill notes, slope staking, laying out the project alignment, as-built of improvements or utilities, and sketches with specific references (dimensions, stationing, point numbers and relationship to ROW).
- notes shall be in pencil; redline book with corrections, means, level adjustments, etc.
- each page shall be labeled with the appropriate header information including: date, crew, instrumentation, weather, and north arrows as applicable.
- notes shall be complete and reduced.
- sketches and traverse data shall be graphic.
- stationing shall increase from the bottom to the top of the page.
- notes shall be precise and sufficiently detailed.
- monument recovery pages shall include detailed descriptions of condition and location of the monuments with sketches identifying nearby streets and properties.

Requirements for scanned field book copies submitted in PDF format include:

- scans will be in color using a minimum of 300 dpi.
- scan all pages including the cover, index page and blank pages, excluding those beyond the used portion of the book.
- review the scanned file and ensure that the entire page was captured and is clear and legible.
- use the bookmark function in Adobe add a bookmark to match the index page; the index page shall be included in the bookmarks; the user of the digital file should be able to go through the book as if they had the physical copy of the book using the book marks.
- use Adobe optimization settings to compress the file size and check to ensure they result is still clear and legible; MOA will reject poor quality scans and require a new version be created before acceptance and payment.

Refer to Section 65.02, Article 2.13 – Electronic Data Collection, Radial Surveys, and Global Positioning Systems (GPS) procedures for logging field notes with the use of electronic data collectors and automated field systems.

Pegging of notes and erasures of information will not be acceptable. A line shall be drawn through those portions of the notes in error leaving the original note legible. The correction shall be noted above the original entry. Corrections shall be initialed and dated. Where appropriate, a note of explanation shall be included.

Field notes shall conform to the note format shown in the Standard Details. Failure on the part of the Contractor to keep and maintain complete and accurate field notes, as required by this Section, shall be sufficient reason to withhold payment for those items of Work where survey is required. No final project payment will be made to the Contractor until the field books have been submitted and approved by the Engineer.

Article 2.3 Party Chief's Daily Diary

The survey party chief shall keep a factual daily diary of all Work performed by the survey crew on the project. As a minimum, the diary shall contain the following information:

- date.
- type & location of Work performed.
- orders from the Engineer.
- crew.
- Work accomplished.
- signature of Party Chief.

This record shall be kept on the project site and submitted to the Engineer upon request. At completion of the project this dairy shall become the property of the Owner.

Article 2.4 Clearing and Grubbing Stakes

The Contractor shall stake the clearing and grubbing limits as shown on the Drawings and/or as directed by the Engineer. If possible, stakes shall be adjusted to avoid sharp breaks in the width of the clearing line. The staking of clearing limits shall be approved by the Engineer in writing prior to the start of the clearing operations.

Distances shall be measured to the nearest foot and standard lath/flagging shall be placed to clearly designate the intended limits. Intervals for placement of lath/flagging shall vary based on the terrain and foliage density, with a minimum of fifty feet (50') and no greater than one hundred feet (100') between lath. In areas of heavy timber, clearing stakes shall be placed to avoid leaving trees on the clearing line. If, as the Work progresses, revisions are required to the originally staked clearing distances, the revisions shall be duly noted in the field notes.

Article 2.5 Cross Sections

The Contractor shall perform all cross sections necessary for determination of excavation and fill or backfill quantities, including intermediate and/or re-measure cross sections as may be required. Cross sections shall be required before excavation activity begins unless otherwise specified. When clearing and grubbing work is included in the contract the original cross sections shall be taken immediately after grubbing work is complete. Cross sections measured for pay quantities shall clearly identify in the field notes whether the Work was done before excavation or after excavation. When both usable and unusable excavation are a part of the project, the limits of usable or unusable materials shall be clearly identified in the cross sections, in the field book.

A. Methods and Procedures

1. Equipment

Cross sections may be accomplished with 1) an engineers level, 2) a self compensating surveyor's level, or 3) an electronic (laser) level, or 4) by electronic data collection and radial survey method. Neither radial methods nor electronic leveling shall be employed without prior approval from the Engineer. When radial methods or electronic leveling methods are used the survey shall comply with or exceed the accuracy established in this article. Conditions under which these methods may be used shall be discussed and approved in writing at the initial pre-construction meeting with the Engineer. For radial methods see Article 2.13 - Electronic Data Collection and Radial Surveys.

2. Procedure and Accuracy

When an engineering level, self compensating surveyor's level, or an electronic (laser) level is used, cross sections shall be taken perpendicular to the centerline along tangents and on radial lines along curves. A right angle prism shall be used to determine perpendiculars. The height of the instruments (H.I.'s) shall be recorded to the nearest hundredth of a foot (0.01'). All cross sectioning work shall be part of a closed level loop. If only one TBM is used the level set-up shall be broken and a different instrument height obtained before closing into the same TBM. The maximum allowable error for level loops used for cross sectioning shall be three hundredths of a foot (0.03'). Cross section readings shall be recorded to the nearest tenth of a foot (0.1'). Horizontal measures shall be recorded and accurate to the nearest tenth of a foot (0.1'). Work shall not be paid for if it does not meet the stated accuracy requirements.

3. Original Ground Measures

Cross section measures of original ground shall be taken at each fifty foot (50') station as indicated on the Drawings. Intermediate stations shall be measured by cross section wherever grade breaks occur. Additional cross sections shall be taken at stations to include quantities measurement of retaining walls, drainage structures, etc. Elevation shots for original ground cross sections shall be taken at the centerline of construction according to the Drawings and as a minimum, at the following points perpendicular to and on each side of the centerline:

- grade breaks
- curb and gutter
- toe of slope
- top of bank
- edge of pavement
- shoulder of road
- centerline of ditch
- all other physical features within the project limits.

In areas where overbreak or slides are anticipated, sections shall be extended out from centerline to include the anticipated disturbed ground area.

4. After Excavation Measures

Cross sections shall be taken at the same stations as the original ground cross sections. Elevation shall be for the bottom, sides and top of excavation at the following points on each side and perpendicular to the centerline:

- centerline
- toe of excavation
- grade breaks
- top edge of cut
- original ground at a minimum of ten feet (10') beyond the limits of excavation.

Work not meeting these requirements shall not be accepted by the Engineer for payment.

B. Notification Prior To Cross Section Work

The Contractor shall notify the Engineer twenty-four (24) hours prior to conducting any survey measurements involving pay quantities. The Contractor shall obtain approval of the excavation from the Engineer prior to taking cross sections and shall provide the Engineer the opportunity to be present during the survey. Pay quantity Work done without the Engineer's notification and approval, or any Work covered up before proper remeasure is made, shall be just cause for non-payment.

Article 2.6 Slope Stakes

Slope stakes shall be required for each cross section station and at additional intervals such as points of curvature and tangency of curves, street intersections, vertical curve intermediate stations to include the high or low point of the curve, and at grade breaks. The stakes are to be set at points where the cut or fill slopes intersect the surface of original ground.

Staking notes shall record the location of the slope stake in relation to the construction centerline, the existing elevation shot at the catch point, the planned elevation that the slope stake is identifying, what level of the design prism the catch point is identifying (i.e., top of unclassified fill, top of subbase, etc.), the percent of slope for cut/fill, the distance to point slope staked, and the station of the slope stake.

The information to be shown on a slope stake is as follows:

- distance from the catch point to the point being staked.
- percent of slope of the cut/fill.
- amount of cut/fill.
- stake's location in reference to the centerline.
- centerline station of the slope stake written on the back of the stake.

The use of hand levels for setting slope stakes shall be limited to one turning point up or down from the instrument to the catch point. Hand level turning points shall be clearly noted in the field book.

A reference stake shall be set for each slope stake. The reference stake shall be set a minimum of ten feet (10') and a maximum of fifteen feet (15') beyond the slope stake. The reference stake shall re-state the slope stake information in the event the slope stake is

disturbed or destroyed. A hub shall be driven flush with the ground at the reference stake and all elevations and distances referenced to the hub.

Article 2.7 Grade Stakes

A. Cut or Fill Stakes

Vertical cut/fill stakes shall be used where the design prism does not contain sloped shoulders and ditches and a slope stake would not be needed. The cut/fill stake shall be comprised of a standard wooden hub driven flush with ground surface and accompanied by a guard lath with the following information written on it:

- amount of cut or fill
- distance to the point of cut/fill from the hub
- description of the cut or filled type, i.e. subgrade, top classified
- offset distance from construction centerline to the cut/fill point
- centerline station written on the back of the lath of cut/fill point
- elevation of the top of hub.

Cuts shall be given to the nearest tenth of a foot (0.1'). Elevations of the top of hubs shall be given to the nearest hundredth of a foot (0.01'). Stakes shall be required at each fifty foot (50') station identified on the Drawings and at additional intervals such as points of curvature and tangency of curves, street intersections, vertical curve intermediate stations to include the high or low point of the curve, and at grade breaks. A record of the cut/fill, the design grade, the distance offset from centerline, the centerline station and the type of cut/fill being staked shall be written in the survey field book.

B. Finish Grade

Grade hubs shall be set to verify that the road prism is at the correct elevation prior to the placement of leveling course material. Wooden hubs, painted or topped with colored whiskers, shall be set at the top of classified fill, within two hundredths of a foot tolerance (0.02'). Stationing shall be fifty feet (50') on tangent and twenty-five feet (25') on curves unless the Engineer approves otherwise. All grade breaks, vertical curve intermediate points to include the high/low point of the curve, PC and PT of horizontal curves, and street intersections shall be staked.

Hubs shall be established on the centerline of the road prism as a minimum where poured curb and gutter is incorporated into the designed road prism. Otherwise, hubs shall be established at the shoulder of the designed road prism, as well as the centerline of the road prism.

When parking aprons are staked, hubs shall be set on a fifty foot (50') grid pattern unless approved otherwise by the Engineer. The field book shall contain the centerline station, the design finish grade elevation of the point staked, the elevation of the hub, and a description of the material being staked.

Article 2.8 Drainage Facilities

The location, type, size, length, and invert elevations for drainage facilities are given on the Drawings. Minor changes in locations and grades to meet existing field conditions may be made where necessary, but only with the approval of the Engineer. If the planned design grade is found to be unworkable in the field, the Engineer shall be notified immediately and all grade staking of the facility shall cease until further notice from the Engineer.

A. Storm Drains, Cleanouts, Outfalls, Catch Basins, Oil and Grease Separators, Culverts

A ground line profile shall be run directly above the centerline of the pipe before trenching occurs. The line and grade for storm drain pipe shall be given from reference hubs offset from each manhole, catch basin, angle point, outfall or cleanout. Reference hubs for culvert installation shall be offset from the pipe ends on the extended centerline of the culvert. One reference hub is required at each end of a culvert. Guard stakes shall be provided for each hub and shall identify the following information:

- station
- size, length and type of pipe
- the amount of cut or fill from the top of the hub to the invert at the end of the pipe
- the horizontal distance from the reference hub to the center of a manhole, cleanout, catch basin, angle point in a pipe, outfall or end of a culvert pipe.

For each structure, the field book shall show the location, type, and size of the structure with a staking diagram showing all distances and pertinent elevations. Two (2) reference hubs shall be set for each manhole, cleanout, catch basin, angle point, and outfall. The reference hubs shall be offset no greater than twenty-five feet (25') from the facility they are referencing.

B. Headwalls

Headwalls for storm drains and culverts shall be staked by setting a hub accompanied by a guard stake on each side of the storm drain or culvert. The hubs shall be on line with the face of the headwall, or as directed by the Engineer. An elevation shall be established on the hubs and written on the guard stake along with the offset distance to the center of the headwall.

C. Dikes and Ditches

Dikes/ditches shall be staked to the alignment, grade and slopes shown on the Drawings. Dikes/ditches shall be slope staked to the shoulder or flow line of the improvement with distances referenced to the improvement centerline. The criteria outlined in Article 2.6 – Slope Stakes shall govern the establishment of slope stakes for this Work.

D. Riprap and Slope Protection

All rip rap and slope protection shall be staked as soon as possible after the pipe, fill, channel change or dike has been constructed. Slope stakes shall be set if needed. See Article 2.6 – Slope Stakes for slope staking criteria.

E. Curb and Gutter

Reference stakes shall be set at even fifty foot (50') stations on tangents as shown on the Drawings. Horizontal curves shall be staked on even twenty-five foot (25') stations. All grade breaks, PVCs, PVTs, low points and high points on vertical curves shall also be staked. A hub and tack shall be set at an offset distance of three feet (3') to the top back of curb. A lath will be set behind the hub and tack with the offset distance marked below the offset and the station marked on the back of the lath. The cut and fill will be to the top back-of-curb within three hundredths of a foot (0.03'). All radius points at curb returns will be staked and additional stakes set breaking up the arc of the curve between curb returns. If valley gutters are to be built, they shall be staked and referenced.

Article 2.9 Water Systems

The Contractor shall stake in the field the alignment and grade for Work to be done under the Contract. Two (2) offset hubs and lath shall be set for each tee, hydrant, water service, valve, angle point, and grade break in the alignment. The lath shall identify the feature being staked and state the elevation of the hub, the offset distance to the center of the feature, and the station of the feature as shown on the Drawings. The offsets shall be set at a reasonable distance to protect them from disturbance.

The Contractor shall be responsible for, and pay all costs for, the transfer of the control points from the reference hubs to such hubs or batter boards as required for the prosecution of the Work. An original ground line profile directly above the water line shall be run prior to excavation. The ground line profile refers to the elevation of the ground directly above the centerline of pipe and the grade line refers to the elevation of the bottom of pipe, except where otherwise noted. The field notes shall record the profile, the hub elevations, offset of the hubs, and the station of the feature being staked.

Article 2.10 Sanitary Sewer Systems

Line and grade for sanitary sewer pipe shall be given from a minimum of two reference hubs for each manhole, outfall or cleanout. Guard stakes shall be provided for each hub showing the information necessary to construct the facility. The minimum information to be shown on the reference stakes and in the field book is as follows:

- centerline of pipe station.
- size and type of pipe.
- cut or fill from the hub to the invert at the end of the pipe.
- offset distance from the hub to the end of the pipe or center of the structure.

Article 2.11 Major Structures

Construction survey procedures shall be reviewed by the Engineer prior to commencing any construction staking. The Engineer's review and approval of survey procedures is required prior to commencing construction activities for major structures including bridges, docks, piers, piling foundations, drainage control facilities and large buildings.

Horizontal and vertical control for the project shall be verified by the Contractor prior to any construction activity. The Contractor shall verify existing field elevations where planned foundations, pilings, piers and support structures are to be placed prior to any construction activity. The Contractor shall verify depth of water and existing ocean or lake bottom elevations for all dock and pier construction prior to commencing pile driving and excavation activity. If any discrepancies are found between the Contract Documents and existing conditions the Contractor shall inform the Engineer immediately.

Article 2.12 Miscellaneous Construction

The Contractor shall provide sufficient stakes for adequate control of all structures and incidental construction not specifically covered above. A staking diagram with respect to centerline and measurements for pay quantities shall be maintained in the field notes. Other items such as horizontal and vertical control shall be shown in the field book and shall be governed by procedures established in previous articles of this Specification.

Article 2.13 Electronic Data Collection, Radial Surveys and Global Positioning Systems (GPS)

Data gathered by electronic data collection by radial methods shall be submitted in AutoCAD drawing file format to be determined by the Engineer along with the digital submittals outlined below. The Contractor shall be guided by the following specifications:

A. A standard field book shall be used to record the date of survey, weather conditions, instrumentation, data collector or GPS units used, crew, project description and sketches, listing of horizontal and vertical control points used and established, and other information needed to set up the reconstruction of the survey.

   Project improvements may be identified in the field book by computed point number, station and offset, feature number or the corresponding letter reference used in the Drawings or other unique identifier. The references used for project features in the field book should be readily matched to the Drawings, and raw data or ascii coordinate files submitted with the project.

   GPS static field notes shall include receiver/unit name, height readings in feet and meters, antenna type, local start and stop time, GDOP and satellite information. GPS RTK field notes shall include base station name, rover height, horizontal and vertical precision to control checks, local time and C.Q. readings to each point.

All survey point numbers assigned to control, computed positions for staking project improvements, excavation etc. will be noted in the field book with the associated raw data file (name). Radial survey field notes will include: code descriptors, horizontal circle information and vertical circle information based on zenith and slope distance expressed in feet.

B. The Contractor will provide digital copies of all unedited raw data files from data collectors and GPS receivers used on the project. A sheet containing the explanation of the codes used to identify the various shots shall be provided.

C. The Contractor will prepare CD(s) or DVD(s) with electronic deliverables separated into ACAD, Monument Reports, Survey Field Notes and Raw Data folders. The folders will contain AutoCad drawings, Monument of Record Forms (MORFs), scanned field notes, ascii point files, and raw data out put files generated by electronic data collection from Total Stations and Static or RTK GPS units. Ascii coordinates files will consist of the reduced and adjusted data represented by point number, station left or right of centerline, elevation, descriptor and coordinates of the point.

D. All cross section data shall be submitted in an unedited points file in point, northing, easting, elevation, description (PNEZD) format so it can be independently run through a DTM program by the Engineer.

Article 2.14 As-built Surveys and Record Drawings

As-built survey measurements shall be required for all constructed facilities and improvements to confirm the dimensions, lines, grades, locations, or materials that deviate from the Drawings. Survey measurements shall be taken, field notes shall be kept, and accuracy shall be attained in accordance with this Division. As-built information shall be marked on a clean set of full-size paper copy Drawings and be submitted to the Engineer at the completion of construction activity. When Record Drawings are to be submitted on the original mylar Drawings, the As-builts recorded on the paper copy Drawings shall be transferred to the mylar and both the paper copy and mylars submitted to the Engineer. The Drawings shall be clearly stamped "Record Drawings." No final project payment will be made to the Contractor until the Record Drawings have been submitted to and approved by the Engineer.

The following abbreviations shall be used on the Record Drawings to denote a deviation from the Drawings:

ASB "As-Built" - The actual horizontal, vertical, dimension, or quantity measured by survey after it has been constructed.

F.C. "Field Change" - Revision or change of original design made in the field.

"DELETED" - Not constructed.

Minimum requirements for construction of Record Drawings:

- When original mylar Drawings are used for Record Drawing purposes, all As-built information shall be in drafting ink and all information shall conform in size, type, and scale to the original. No stick-on information adhesives shall be accepted on the original mylars submitted for filing of Record Drawings.

- When paper copies are used for record Drawing purposes, As-built Work shall be marked in red ink or red pencil to clearly identify the changes to the original design.

- A straight line drawn through stationing, elevations, and notes shall show a change, deletion, or omission and shall be followed with the appropriate symbol.

- Storm sewer, water, sanitary sewer, gas lines, or any construction that has been deleted or relocated will be crosshatched.

- Crossed out information should still remain legible.

- The scale of new gas lines, water, sewer, or any new construction not shown should conform to the scale of the drawings.

- Reference information used to prepare Record Drawings, such as change orders, and field books, shall be noted on the drawings.

- Profile changes will be made with elevations or stationing only. The profile line need not be re-drawn unless the change is significant.

- As-builts for water, sewer, gas lines, and storm drain systems shall be accurate within three-hundredths feet (0.03') vertically and one-half feet (0.5') horizontally. As-built Information shall be referenced to existing subdivision survey control and/or monumented centerline of the right-of-way control.

- As-builts for structures shall be accurate to within one-half inch (1/2") vertically and horizontally.

- The name of the Record Drawing preparer, the employer, and the date of the preparation shall appear in the appropriate title block on each Record Drawing sheet.

The construction of Record Drawings is incidental to other Work and no measurement or payment shall be made.

Article 2.15 Final Acceptance Date

As identified in Division 10, Section 5, Article 5.26 – Final Inspection, the Final Acceptance Date for the project is dependant on the review and approval of the Municipal Surveyor of the required Construction Survey related submittals including:

- Post construction survey monumentation re-establishment
- Record of Monument Forms and/or Record of Survey Maps
- Construction survey field books and/or scanned copies of field books
- Electronic field data and/or reduced GPS data output

Article 2.16 Method of Measurement

The method of measurement for surveying services shall be a lump sum cost item on the bid schedule. The lump sum cost for Construction Survey Measurement shall include all project control, project staking and quantities measurement for the following unit price items: clearing, clearing and grubbing, pavement removal, road excavation, trench excavation, topsoil, and seeding.

The measurement for Existing Monument and Lot Corner Search shall be a lump sum bid item measured at the time of completion of the establishment of project staking of centerline control. Contractor shall submit field book notes to the Engineer for the Owner's review and approval of the pay item.

Measurement for bid schedule item "Two-Person Survey Crew", will be the cost per hour for a two person crew. The item, Two-Person Survey Crew, shall be used only for extra, additional, or unanticipated Work required for changes in the project as directed by the Engineer. Additional survey Work requiring one survey person shall be paid at forty-five forty-five percent (45%) of the bid amount per hour of a two-person crew. The item One-Person Survey Crew shall be used only for extra, additional, or unanticipated Work required for changes in the Project as directed by the Engineer.

For bid schedule item "Survey Monument Installed," the measurement shall be the cost to purchase the materials and install a monument per Article 2.1, SubArticle B.4 – Standard Monument and Monument Case Specifications. When the bid schedule contains an item "Survey Monument Installed in Monument Case," the measurement shall be the cost to purchase the materials and install a monument in a monument case, per Article 2.1, SubArticle B.4 – Standard Monument and Monument Case Specifications.

Computer time is incidental to other Work and will not be measured. Certified payrolls and daily time records are required for all Work to be measured by the hour and survey monuments installed.

Article 2.17 Basis of Payment

Payment for this item shall be in accordance with Division 10, Section 10.07 - Measurement and Payment and shall include full payment for all Work described in this Section.

Payment shall be made under the following units:

ITEM	UNIT
Construction Survey Measurement	Lump Sum
Survey Monument Installed in Monument Case	Each
Survey Monument and Lot Corner Installed	Each
Two-Person Survey Crew	Hour
Existing Monument and Lot Corner Search	Lump Sum

MUNICIPALITY OF ANCHORAGE
STANDARD SPECIFICATIONS

DIVISION 65
CONSTRUCTION SURVEY
STANDARD DETAILS

STANDARD CONSTRUCTION SPECIFICATIONS
MISCELLANEOUS
DIVISION 65
INDEX OF STANDARD DETAILS

65-1	Field Book Index
65-2	Control Reference Points
65-3	Monument Recovery and Horizontal Control
65-4	Vertical Control
65-5	Clearing Limits
65-6	X-Sections/Slope Stakes
65-7	Grade Stakes/Blue Tops
65-8	Drainage Structures
65-9	Retaining Wall Structures
65-10	Storm Sewer Layout
65-11	Drainage Stakes
65-12	Curb and Gutter Stakes
65-13	Water Line Layout

MUNICIPALITY OF ANCHORAGE

SCALE: NTS

APPROVED:

REVISED: 10/07

FIELD BOOK INDEX

SECTION # 65.02

DETAIL # 65-1

2150 01

INDEX

Page	Location	Date	Description
2	Third Ave.	9-10-06	Begin retracement & establishment of "P-line"
3-6	Third Ave.	9-11-06	Complete "P-line" & determine falling at Reeve Blvd.
7-12	Third Ave.	9-12-06	Tie property corners from "P-line"
13-16	Third Ave.	9-13-06	Establish ℄ Construction from "P-line"
17	Third Ave	9-14-06	" " " " "
18-20	" "	9-17-06	Slope stakes S.E. corner Third & Post
21-23	" "	9-18-06	R.P. 20+00 ℄ Nelchina, 26+50 & 31+0335
24-27	" "	9-19-06	R.P.'s ℄ & S.I.'s
28-40	" "	10-1,10-2-06	Luminaires
41	" "	10-3-06	R.P. ℄ S.I. 3rd & Post
42	" "	10-4-06	Stake Load Center
43-50	" "	10-5-06	Curb & Gutter Staking
51-53	" "	10-6-06	Stake Load Center & Luminaires
54-55	" "	10-15-06	J-Boxes, Post & Third, Concrete St. & Third grades
56	" "	10-22-06	P.P. Elevations
57	" "	11-9-06	Storm Drain MH
58-70	" "	7-23-07	Before & after Ex X-S
71	" "	7-27-07	As Built Curb
72-73	" "	7-30-07	Curb & gutter Rt. Side 17+18 to Nelchina
74-75	" "	8-3-07	Restake C&G on Nelchina St.
76-77	" "	8-3-07	Curb & gutter 3rd Ave.
78-79	" "	8-4-07	Curb & gutter Post Rd.

MUNICIPALITY OF ANCHORAGE	SCALE: NTS APPROVED: REVISED: 10/07	CONTROL REFERENCE POINTS	SECTION # 65.02 DETAIL # 65–2

MUNICIPALITY OF ANCHORAGE

SCALE: NTS

APPROVED:

REVISED: 10/07

MONUMENT RECOVERY AND HORIZONTAL CONTROL

SECTION # 65.02

DETAIL # 65-3

West 42nd. Ave. (Place) Horizontal Control

Nov. 13, 1986 Clear±30°F
Party Chief
Instrm.
Chnm.
T 2000
Layout Rod

2058 52

N

WISCONSIN

Broadmore Estates Blk . 1

16 15

3" ϕ Brass Mon.
1" below surface
Slightly scarred

DOWL L 14 WLT 6136 1977

30.00 30.00 Found P. K.

Green Valley Unit No . 3 Blk . 1

All these #4 rebar were bent and in poor condition

20 19 18 17 16 15 14 13

30.00 29.3 30.00

660.07 90° 12-00 = 660.07
150.09ch.

1. 270° 00' 58"
2. 180° 01' 42"
M2. 270° 00' 51"
4. 00° 08' 46"
M4. 270° 00' 56"

1320.20 @ 90°-50-04

Found 1/2" ϕ Rebar on C of A square nail

1320.06 Mea. ℄ WEST 42nd.
(1321.11 Rec.)

30.00

There were no lot corners found along this property line, west end of block

Green Valley Subd.
Unit No. 3 Blk. 2

C of A S20 S35 1981

3 1/4" B. C.
0.25 Below Asphalt
6" I. D. Case

Broadmore Estates Add No. 2

P O SE COR Lot 31 1972

31

30.00

3"ϕ Brass mon.
0.2 above ground,
good condition

Found C of A square nail resembles 1/8" ϕ rebar

NOTE: Ref. CofA FB 1898 pg. 2-5 for ℄ control Turnagain Blvd.

15555.79 @ 90°-13-30

1555.78 Mea (1555.63 Rec.)

30.00 Set P.K. Nail

2¾" ϕ Brass mon. flush no markings

149.45 ch.
150.00 (Rec.)

4 3 2 1

30.28 30.07

1. 89° 57' 09"
2. 179° 44' 12"
M2. 89° 52' 06"
4. 359° 28' 08"
M4. 89° 52' 02"

LEGEND:

▲ #4 Rebar

⊙ #5 Rebar

Set PK nail by intersection

30.04 30.01

14 13 12 11

TNH 1967

5/8" x 30" RB
ϕ 2" AL . CAP
Set, Jan.14, 1987
THOMAS
CARTER
CLINE

MUNICIPALITY OF ANCHORAGE

SCALE: NTS

APPROVED:

REVISED: 10/07

VERTICAL CONTROL

SECTION # 65.02

DETAIL # 65-4

TBM LOOP FOR 100th AVE. TOPO
Note: We peg our level immediately before beginning this loop, check ±0.0005 in 400'
Wild NA^{9} #502261

Sta	+	Hi	−	ELEV
TP	0.30	27^{68}		
			12.30	27^{38}
TP	3.21	39^{68}		
			7.51	36^{47}
TP	1.43	43^{98}		
			14.47	42^{55}
TP	1.74	57^{02}		
			6.68	55^{28}
TP	5.51	61^{96}		
			9.95	56^{45}
GAAB 39	4.20	66.40		
			4.15	62^{22}
TP	7.11	66^{37}		
			2.49	59^{26}
TP	3.79	61^{75}		
			9.04	57^{96}
TP	0.02	67^{00}		
			10.34	66^{98}
TP	0.23	77^{32}		
			5.81	77^{09}
TP	6.50	82^{90}		
			5.48	76^{40}
TNH15	5.03	81^{88}		

1/26/07

2058 52

Clear 20°F
Party Chief
Instrm.
Rodm.

TBM	DESCRIPTION
⟨62.20⟩	Fnd. BC Mo@ A&W Root Beer Bldg
⟨76.85⟩	Fnd. BC@ Dimond H.S. as per MOA BM Book Pg. 213

MUNICIPALITY OF ANCHORAGE

SCALE: NTS

APPROVED:

REVISED: 10/07

CLEARING LIMITS

SECTION # 65.02

DETAIL # 65-5

UNIVERSITY DRIVE
STAKE EXCAVATION LIMITS

EXCAVATION LIMITS (FROM ℄)

Station	Lt	Rt.
34+78	30⁰	30⁰
Begin Exc.		
35+35	29²	39⁰
36+00	29¹	34⁸
36+50	28⁷	27⁰
37+00	58²	27⁰
37+50	57⁹	27⁰
38+00	27⁵	27⁰
38+50	27⁹	-
38+63.2	-	30⁸
39+00	27⁰	
39+13.2	27⁰	27⁰
40+00	27⁰	27⁰
41+00	27⁰	27⁰
41+50	27⁰	27⁰
42+00	25⁶	25⁶
43+00	22⁸	22⁸
44+00	20⁰	20⁰
45+00	20⁰	20⁰
46+00	20⁰	20⁰
47+00	20⁰	20⁰
48+00	20⁰	20⁰
49+00	20⁰	20⁰
50+00	20⁰	20⁰
50+50	20⁰	20⁰
51+00	20⁰	20⁰
52+00	20⁰	20⁰
52+50	20⁰	20⁰
52+70	20⁰	20⁰
End Exc.		

2026 04

5/29/07
Sunny 60°F
Party Chief
Chainm.
RT ℄ Prism
100' Rag Tape

X-SECTIONS BEFORE EXCAVATION/
GOLDENVIEW DRIVE

CLOUDY 58°

STA.	+	HI	-	ELEV.		
26+00 ℄ Sub. 670.92		F0^{16} 670^{76} 6^{71} 30	670^{4} 7^{1} 25	670^{1} 7^{4} 13	669^{8} 7^{4} 10	670^{9} 6^{6} 6 ER
		C-1^{0} (1^{2})				
25+50 ℄ Sub. 673.23	C-0^{8} 5^{0} C-2^{2} 1½:1 3^{5} C-0^{7} 6^{3} C-0^{5} 28^{3}	C-0^{93} 674^{18} 3^{29} 30	673^{5} 4^{0} 26	673^{5} 4^{0} 17	672^{9} 4^{6} 10	674^{0} 3^{5} 6 ER
		2^{9} (2^{2})				
TP	2.03	677.47 687.30	11.86	675.44		

GRADE STAKES 5/24/07
Party Chief N1-2
Chainman Philly Rod
Instrumentman Rag Tape

1958 015

671^{3} 6^{2} ℄	671^{8} 5^{9} 10	671^{6} 6^{3} 19 ER	671^{2} 6^{3} 24 TOE	672^{5} 5^{0} 26	672^{94} 4^{53} 30 3^{6} (2^{2})	C-0^{3} 5^{0} C-2^{1} 1½:1 3^{2} C-0^{6} 6^{2} C-0^{5} 20^{2}
674^{4} 3^{1} ℄	675^{0} 3^{5} 11	674^{8} 2^{7} 19 ER	674^{9} 2^{6} 23	676^{1} 1^{4} 28	C-3^{83} 677^{06} 0^{41} 30 5^{4} (3^{1})	C-1^{3} 5^{0} C-2^{8} 1½:1 4^{2} C-1^{3} 7^{2} C-1^{2} 21^{2}

MUNICIPALITY OF ANCHORAGE

SCALE: NTS
APPROVED:
REVISED: 10/07

X-SECTIONS/SLOPE STAKES

SECTION # 65.02
DETAIL # 65-6

MUNICIPALITY OF ANCHORAGE

SCALE: NTS

APPROVED:

REVISED: 10/07

GRADE STAKES/BLUE TOPS

SECTION # 65.02

DETAIL # 65-7

UNIVERSITY DRIVE
BLUETOPS
TOPTYPE II

5/24/07
CLDY 50°

STA.	+	HI	-	ELEV.	LT.
39+50					
39+13.2					
39+00					
38+50					
T.P. ℄ UNIV. at 38+00		4.69		148.30	RT 6.04
38+00					
37+50					

149.63 RT.

N12
Philly Rod

Party Chief
Chainman
Instrumentman

2150 42

RT.
5^{79}

27^{0} ℄ Rd 142^{51} ✓
27^{0}
C-1^{0} FG
5^{66}

No B.TOP ℄ Rd 142^{64} ✓
27^{0}

27^{0} ℄ Rd No B.TOP

27^{2} ℄ Rd No B.TOP

143.61
RT.143.59
Elev. from Pg. 11

27^{2} ℄ Rd No B.TOP
C-0^{4} FG
6^{15}

27^{9} ℄ Rd 143^{48} ✓
27^{0}

MUNICIPALITY OF ANCHORAGE

SCALE: NTS

APPROVED:

REVISED: 10/07

DRAINAGE STRUCTURES

SECTION # 65.02

DETAIL # 65-8

CULVERT STAKES Eagle River Rd.

2150 42

Party Chief 5-13-85 55° Cldy
Instrm.
Chnm. Wild NI II
25' Glass Rod
100' Chain

STA + HI - ELEV.

TBM 489.42 8.08 481.34 Rec. 481.35

N. Rim MH at NW cor. E. R. Rd & Wildwood
Page 65

Exist. Ditch
8^{0} 481.4 at outfall

Exist. Ditch
9^{1} 480.3 Bottom^{5}

$0+67^{5}$ N
$2+03^{2}$ E

RP (10) S
7. 60 481.82 Inv. Grade 480.10
RP (10) N.
489.42 5.06 484.36

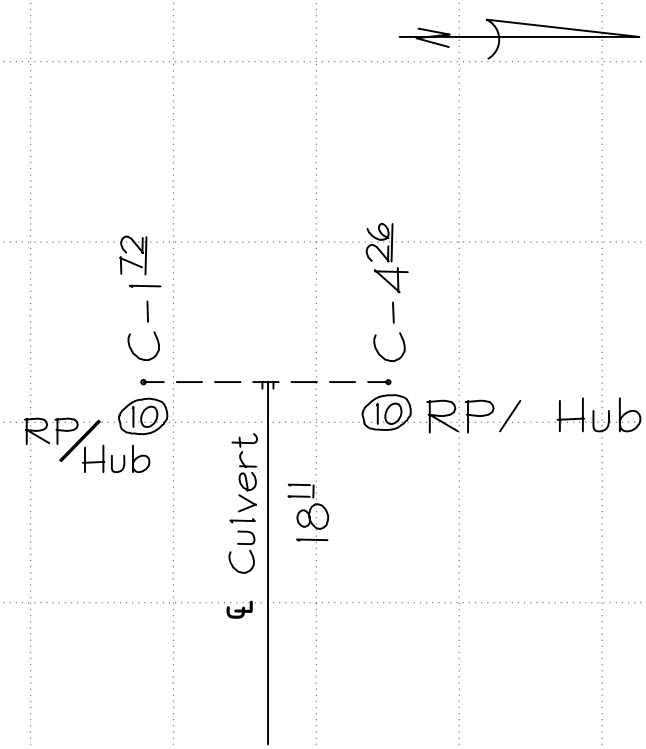

MUNICIPALITY OF ANCHORAGE

SCALE: NTS

APPROVED:

REVISED: 10/07

RETAINING WALL STRUCTURES

SECTION # 65.02

DETAIL # 65-9

CONST STAKES for W. Headwall Lee St.

Party Chief T-16
Instrm. NI-11
Chnm. Rag Tape
25' Glass Rod

STA	—	HI —		FINISH GRADE	ELEV.
		(20) 6.43	Top of Wall	181.40	189.48
N. Wing Wall	197.83	(10) 6.11	Bottom of Footing	191.72	183.90
		(20) 6.11	Top of Wall	191.72	192.48
Head Wall 30+73 82	197.83	(10) 6.98	Bottom of Footing	190.83	183.90
		(20) 4.29	Top of Wall	193.56	192.48
Head Wall 30+56 66	197.83	(10) 5.00	Bottom of Footing	192.83	183.90
		(20) 4.61	Top of Wall	193.22	189.48
S. Wing Wall	197.83	(10) 4.84	Bottom of Footing	192.99	183.90

2150 42

60° F Cldy
6-12-85

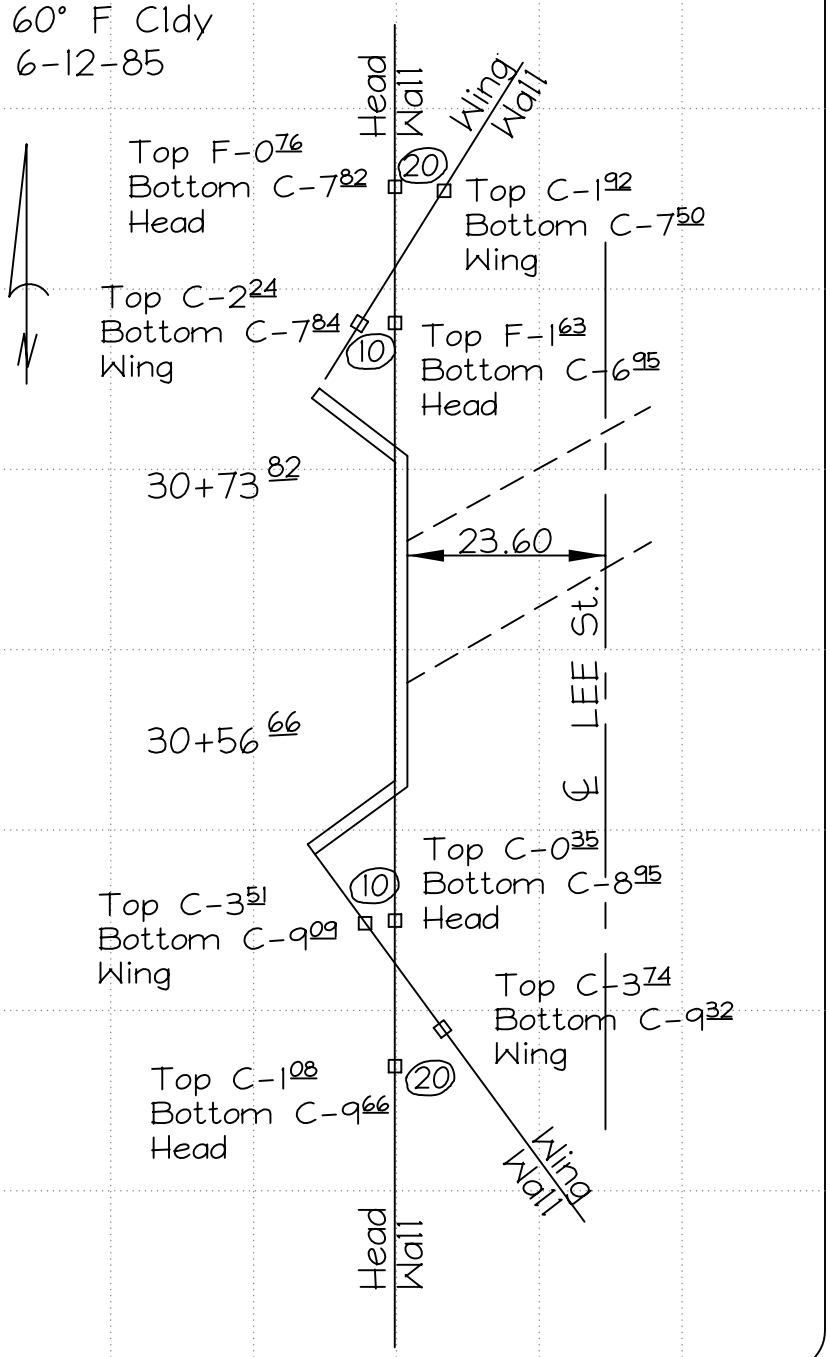

STAKE STORM SEWER
SUNDEW CIRCLE

Sept. 2, 1986
Clay 55°
Party Chief
Chnm.

			ELEV.
0 + 15 SDMH #1	10	4.85	80.07
51+15.48 SDMH #2	15	4.82	81.10
	30	6.65	78.27
49+41.27 SDMH #3	15	3.48	81.44
	30	6.36	78.56
TP	3.62	84.92	10.29 81.30
48+41.50	15	14.07	77.52
	30	14.15	77.44
46+23.28 SDMH #5	15	5.31	86.28
	30	5.46	81.13
46+02.28 CB	15	6.51	85.08
	30	5.49	86.10
TBM 4.21 + STA.	91.59 HI	–	87.38

MUNICIPALITY OF ANCHORAGE

SCALE: NTS

APPROVED:

REVISED: 10/07

STORM SEWER LAYOUT

SECTION # 65.02

DETAIL # 65–10

3111 966

Spike in PP A-256-A B9 page 7
DESCRIPTION

CONSTRUCTION STAKES
OPEN DITCH
Goldenview Dr. 164th to 162nd

Party Chief 7-8-85
Instrm. Sunny 65°
Chainm. NI 2
Philly Rod

STA	+	HI	-	ELEV.	FINISH GRADE
TBM	2.07	670.61		668.54	
20+00		670.61	3.32	667.29	661.53
27+50		670.61	4.10	666.51	662.20
27+00		670.61	4.45	661.16	662.87

MUNICIPALITY OF ANCHORAGE

SCALE: NTS

APPROVED:

REVISED: 10/07

DRAINAGE STAKES

SECTION # 65.02

DETAIL # 65–11

MUNICIPALITY OF ANCHORAGE

SCALE: NTS

APPROVED:

REVISED: 10/07

CURB AND GUTTER STAKES

SECTION # 65.02

DETAIL # 65–12

CURB & GUTTER STAKES SUNDEW CIRCLE

2179 014

Party Chief NI-II
Instrm. 25' Glass Rod
Chainm. 100' Rag Tape

	LEFT		℄	RIGHT	
46+80 85.36TC	6.69 18'	84.79F – 0^{57}		7.56 18'	83.92F – 1^{44}
46+60PUC	5.69 18'	85.79C – 0.07		7.38 18'	84.10F – 1.62
BEGIN C&G 46+56.78 85.77TC	5.77 18'	85.71F – 0.06		7.26 18'	84.72F – 1.55

Note: Hub/Tack set $^{01}3$ offset to TBC.

TBM +4.10 91.48 8738 N. Bolt
STA + RT. – ELEV.

F.M. E Side Timothy – 100' of Sundew Cir
MOA FB 1985-4

MUNICIPALITY OF ANCHORAGE

SCALE: NTS

APPROVED:

REVISED: 10/07

WATER LINE LAYOUT

SECTION # 65.02

DETAIL # 65-13

CONST. STAKES W/L @ 40th ¢ Denali

		114.28	4.81	109.47	109.48
22°30' Bend			3.47 (60)	110.81	
13+77.4 N		114.28	4.92 (40)	109.36	94.00
12 x 16 Tee			5.98 (60)	108.30 BOP	
39+45 E					
13+32 N		114.28	5.63 (40)	108.65	94.00
38+91 ℄			4.30 (40)	109.98 BOP	
Plug		114.28	5.64 (60)	108.64	93.55
STA	1.32 +	114.28 HI	-	112.96 ELEV.	FINISH GRADE

5-21-84
53°F Sunny Party Chief
Instrmt.
100' Chain Chnm.
NI-2
25' Rod

0224 067

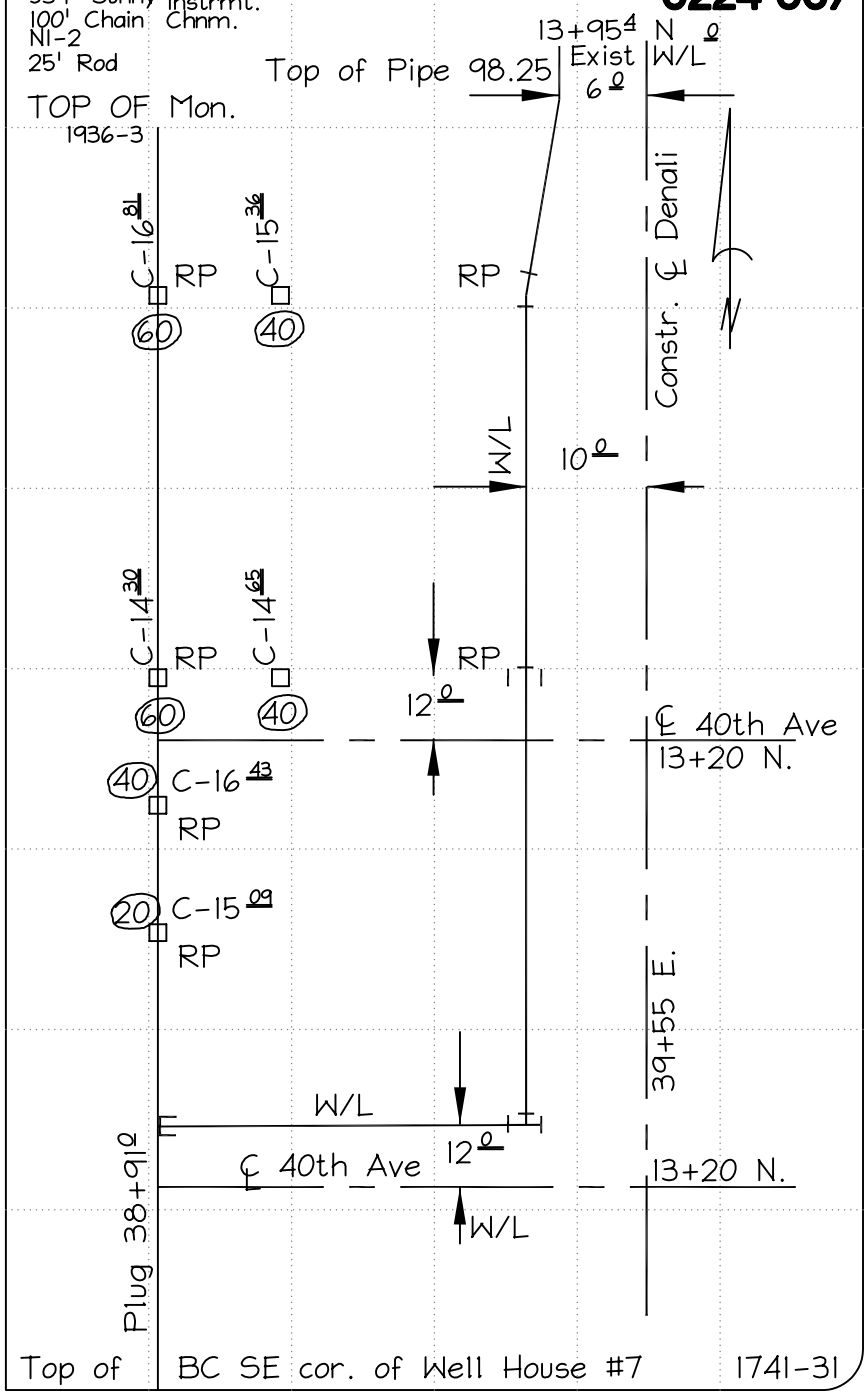

REVISION: 12/12 NEW

MUNICIPALITY OF ANCHORAGE

SCALE: NTS

APPROVED:

REVISED: 12/12

STATIC GPS
HORIZONTAL CONTROL

SECTION # 65.02

DETAIL # 65–14

West 32nd. Ave. Storm Drain Upgrades PM&E 00–13

Horizontal Control
Static GPS Observations

Point		
15	RCVR/UNIT	TRIUMPH #546
	HI:	5.58F (1.700m)
	START:	3:15PM ADT
	STOP:	5:40PM
	FILE#:	05270515a
16	RCVR/UNIT	TRIUMPH #527
	HI:	5.29F (1.612m)
	START:	3:50PM ADT
	STOP:	5:46PM
	FILE#:	05460515a
101	RCVR/UNIT	TRIUMPH #527
	HI:	5.29F (1.612m)
	START:	3:50PM ADT
	STOP:	5:46PM
	FILE#:	05460515a

2058 52

Month Day, 2012
Clear±30°F
Party Chief
Crew
Instrument

N

Point	Description	Cap Detail
15	Found 3" ø Brass Mon. 1" below surface Slightly scarred	DOWL L 14 WLM 6136 1977
16	Found 3 1/4" B. C. 0.25 Below Asphalt 6" I. D. Case GOOD CONDITION	C of A S20 S35 1981
101	Set 8in Spike 0.11' Below Gnd. Located on the NE shoulder of Virgo Ave in the NE cor of the int. of Virgo Ave.and Woodridge Dr. and 37.0' east of "Yeild" sign post on West side of the Int. of Virgo Ave. and Woodridge Dr.	

See page 50 of this book for Static GPS control sketch.

REVISION: 12/12 NEW

MUNICIPALITY OF ANCHORAGE

SCALE: NTS

APPROVED:

REVISED: 12/12

STATIC GPS HORIZONTAL CONTROL

SECTION # 65.02

DETAIL # 65-15

75TH Avenue– Rovenna Wade
PM&E No. 10–20

2058 53

Month, Day, 2012
Clear±30°F
Party Chief
Crew
Instrument

N

Horizontal Control
Static GPS Observations

Point	UNIT	HT	ANT O/S	LOCAL TIME
401	STS55A–10	1.293M 4.245F	AX01206G 0.360M	16:17 16:32
402	STS55A–11	3.675M 1.117F	AX01206G 0.360M	16:17 16:32

Point	Description
401	Set magnail 5' north of stop sign 15' SW of a LP, 1' E of the W. curb
402	Set magnail 10' W. of a trash bin, 30' NE of the SI of Branche & 75th, 6' W. of EP

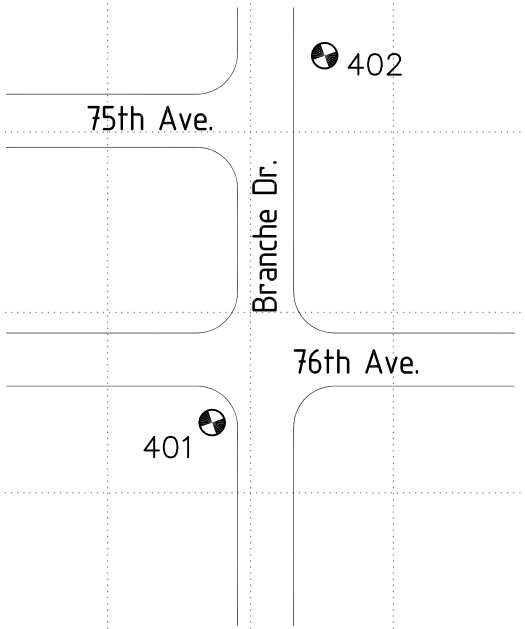

REVISION: 12/12 NEW

MUNICIPALITY OF ANCHORAGE

SCALE: NTS

APPROVED:

REVISED: 12/12

RTK GPS
STORM DRAIN LAYOUT

SECTION # 65.02

DETAIL # 65–16

75TH Avenue– Rovenna Wade

PM&E No. 10–20

2058 55

Month Day, 2012
Clear±30°F
Party Chief
Crew
Instrument

RTK GPS Observations

Point	UNIT	HT	ANT O/S	LOCAL TIME	CQ	Description
716	RTK ROV 13	6.562	AX1230 99	10:32	O AVG	Chk to Fnd. Rb w/ypc in moncase SI E & 5th
717				10:45	O AVG	Chk to Fnd. 2–1/2" BC Mon in Case SI C & 5th
714				11:30	O AVG	Chk to rb w/ypc in mon case SI E & 6th
1000				12:45	0.08	Sta 61+08.35 16.5 RT I9–3 RP @ 10, 25 SET HUBS
1001				12:48	0.08	Sta 60+93.55 22.03 RT E9–1 (EXISTING)
1002				12:49	0.07	Sta 60+60.56 32.05 RT I9–2, RP HUBS SET @ 10RT, 20RT
1003				12:50	0.08	Sta 60+38.84 17.38 RT M9–2 RP HUBS SET @ 15RT, 30RT
1004				12:51	0.084	Sta 59+08.16 16.55 RT M9–3, RP HUBS SET @20RT, 40RT
1005				12:52	0.088	Sta 59+0815 17.38 RT S–11, RP HUBS SET @ 10RT, 20RT

N

NOTE: HORIZONTAL COMPONENTS OF MANY PROPOSED FEATURES MAY BE STAKED USING RTK GPS TECHNIQUES.. VERTICAL COMPONENTS MUST BE STAKED USING CONVENTIONAL TOTAL STATION OR DIFFERENTIAL LEVELING METHODS.

MUNICIPALITY OF ANCHORAGE
STANDARD SPECIFICATIONS

DIVISION 70
MISCELLANEOUS

STANDARD CONSTRUCTION SPECIFICATIONS
MISCELLANEOUS
DIVISION 70
INDEX

SECTION 70.01	GENERAL	1
Article 1.1	Scope of Work	1
Article 1.2	Applicable Standards	1
SECTION 70.02	ADJUST GAS VALVE KEY BOX TO FINISH GRADE	2
Article 2.1	General	2
Article 2.2	Material	2
Article 2.3	Construction	2
Article 2.4	Measurement	2
Article 2.5	Basis of Payment	2
SECTION 70.03	ADJUST GAS VALVE MANHOLE TO FINISH GRADE	3
Article 3.1	General	3
Article 3.2	Material	3
Article 3.3	Construction	3
Article 3.4	Measurement	3
Article 3.5	Basis of Payment	3
SECTION 70.04	ADJUST ELECTRIC/TELEPHONE MANHOLE	4
Article 4.1	General	4
Article 4.2	Materials	4
Article 4.3	Construction	4
Article 4.4	Measurement	4
Article 4.5	Basis of Payment	5
SECTION 70.05	ADJUST ELECTRICAL VAULT	6
Article 5.1	General	6
Article 5.2	Materials	6
Article 5.3	Construction	6
Article 5.4	Measurement	7
Article 5.5	Basis of Payment	7
SECTION 70.06	ADJUST UTILIDUCT LID	8
Article 6.1	General	8
Article 6.2	Materials	8
Article 6.3	Construction	8
Article 6.4	Measurement	9
Article 6.5	Basis of Payment	9

SECTION 70.07 REMOVE PIPE 10
Article 7.1 General 10
Article 7.2 Construction 10
Article 7.3 Measurement 10
Article 7.4 Basis of Payment 10

SECTION 70.08 RESET FENCE 11
Article 8.1 General 11
Article 8.2 Material 11
Article 8.3 Construction 11
Article 8.4 Measurement 11
Article 8.5 Basis of Payment 12

SECTION 70.09 RESET PARKING METERS 13
Article 9.1 General 13
Article 9.2 Construction 13
Article 9.3 Measurement 13
Article 9.4 Basis of Payment 13

SECTION 70.10 TRAFFIC MARKINGS 14
Article 10.1 General 14
Article 10.2 Materials 14
Article 10.3 Construction 15
Article 10.4 Measurement 19
Article 10.5 Basis of Payment 19

SECTION 70.11 STANDARD SIGNS 21
Article 11.1 General 21
Article 11.2 Materials 21
Article 11.3 Construction 25
Article 11.4 Measurement 25
Article 11.5 Basis of Payment 26

SECTION 70.12 TRAFFIC MAINTENANCE 29
Article 12.1 General 29
Article 12.2 Traffic Control Plan 29
Article 12.3 Pedestrian Traffic 30
Article 12.4 Work Site Traffic Supervisor 30
Article 12.5 Materials 32
Article 12.6 Public Notice 33
Article 12.7 Traffic Control Devices 34
Article 12.8 Authority of the Engineer 35
Article 12.9 Execution 35
Article 12.10 Measurement 36
Article 12.11 Basis of Payment 36

SECTION 70.13 BOLLARDS 38
Article 13.1 General 38
Article 13.2 Materials 38
Article 13.3 Construction 40
Article 13.4 Method of Measurement 41
Article 13.5 Basis of Payment 41

SECTION 70.14 REMOVE GUARDRAIL 42
Article 14.1 General 42
Article 14.2 Construction 42
Article 14.3 Measurement 42
Article 14.4 Basis of Payment 42

SECTION 70.15 GUARDRAIL 43
Article 15.1 General 43
Article 15.2 Material 43
Article 15.3 Construction 43
Article 15.4 Measurement 43
Article 15.5 Basis of Payment 44

SECTION 70.16 TEMPORARY GROUP MAILBOXES 45
Article 16.1 General 45
Article 16.2 Materials 45
Article 16.3 Construction 45
Article 16.4 Measurement 45
Article 16.5 Basis of Payment 45

SECTION 70.17 RELOCATE MAILBOX 46
Article 17.1 General 46
Article 17.2 Materials 46
Article 17.3 Construction 46
Article 17.4 Measurement 46
Article 17.5 Basis of Payment 47

SECTION 70.18 CHAIN LINK FENCE 48
Article 18.1 General 48
Article 18.2 Materials 48
Article 18.3 Tables 51
Article 18.4 Construction 52
Article 18.5 Measurement 53
Article 18.6 Basis of Payment 54

SECTION 70.19 SILT FENCE 55
Article 19.1 General 55
Article 19.2 Materials 55
Article 19.3 Construction 55
Article 19.4 Measurement 55
Article 19.5 Basis of Payment 55

SECTION 70.20 SOIL STABILIZATION 56
Article 20.1 General 56
Article 20.2 Material 56
Article 20.3 Construction 58
Article 20.4 Surface Requirements 58
Article 20.5 Application 59
Article 20.6 Maintenance and Repair 61
Article 20.7 Measurement 61
Article 20.8 Basis of Payment 62

SECTION 70.21 FLEXIBLE DELINEATORS 63
Article 21.1 General 63
Article 21.2 Submittals 63
Article 21.3 Materials 63
Article 21.4 Construction 63
Article 21.5 Measurement 63
Article 21.6 Basis of Payment 63

STANDARD CONSTRUCTION SPECIFICATIONS
MISCELLANEOUS
DIVISION 70

SECTION 70.01 GENERAL

Article 1.1 Scope of Work

The Work covered by these Specifications consists of providing all plant, labor, equipment, supplies, materials, transportation, handling and storage, and performing all operations in connection with the adjustment and/or construction of miscellaneous facilities as provided in this Division.

Article 1.2 Applicable Standards

The latest revision of the following standards of the American Society for Testing and Materials (ASTM) and the American Association of State Highway and Transportation Officials (AASHTO) are hereby made a part of these Specifications.

ASTM A-112	Specification for Zinc-Coated (Galv.) Steel Tie Wires
ASTM A-120	Specification for Black and Hot-Dipped Zinc-Coated (Galv.) Welded and Seamless Steel Type for Ordinary Uses
ASTM A-121	Specification for Zinc-Coated (Galv.) Steel Barbed Wire
ASTM A-153	Specification for Zinc-Coated (Hot Dip) on Iron and Steel Hardware
ASTM A-227	Specification for Hard-Drawn Steel Spring Wire
ASTM A-307	Specification for Low-Carbon Steel Externally and Internally Threaded Standard Fasteners
ASTM A-392	Specification for Zinc-Coated Steel Chain Link Fence Fabric
AASHTO M-133	Specification for Preservatives and Pressure Treatment Processes for Timber
AASHTO M-145	Classification of Soils
AASHTO M-180	Specification for Corrugated Sheet Steel Beams for Highway Guardrail

SECTION 70.02 ADJUST GAS VALVE KEY BOX TO FINISH GRADE

Article 2.1 General

The Work under this Section consists of providing all operations pertaining to adjustment of existing gas valve key boxes to finish grade. The Contractor must contact ENSTAR's Distribution Department prior to starting any Work that includes or is adjacent to the gas valve key box.

Article 2.2 Material

ENSTAR will furnish all materials to adjust gas valve key boxes to finish grade.

Article 2.3 Construction

The Contractor shall adjust gas valve key boxes in accordance with the applicable Standard Details, unless otherwise directed by the Engineer. Any damage to gas valve key boxes resulting from construction under this Contract shall be repaired or the damaged portion replaced at the Contractor's expense. All gas valve key box adjustments will be accomplished as requested by the Engineer. The Contractor shall be responsible for ensuring that the gas valve key box is vertical, clean, to proper grade, and readily accessible for operation of the valve.

Contractor shall adjust the service key box to finish grade prior to placement of asphalt pavement. After-the-fact cutting of new asphalt for adjustments is not accepted. Any adjustment(s) requiring cutting of new asphalt shall not be paid and shall be deducted from the plan quantity.

Article 2.4 Measurement

Adjustment of gas valve key boxes will be measured per unit, complete in place.

Article 2.5 Basis of Payment

Payment for this Work shall be in accordance with Division 10, Section 10.07 - Measurement and Payment, and shall include full payment for all Work described in this Section.

Payment shall be made under the following unit:

ITEM	UNIT
Adjust Gas Valve Key Box to Finish Grade	Each

SECTION 70.03 ADJUST GAS VALVE MANHOLE TO FINISH GRADE

Article 3.1 General

The Work under this Section consists of providing all operations pertaining to adjustment of existing gas valve manholes to finish grade. The Contractor must contact ENSTAR's Distribution Department prior to starting any Work that includes or is adjacent to the gas valve manhole.

Article 3.2 Material

ENSTAR will furnish all materials, except mortar, to adjust gas valve manholes to finish grade.

Article 3.3 Construction

The Contractor shall adjust gas valve manholes in accordance with applicable Standard Detail, unless otherwise directed by the Engineer. Any damage to gas valve manholes resulting from construction under this Contract shall be repaired or the damaged portion replaced at the Contractor's expense. The Contractor shall be responsible for ensuring that the valve box is vertical, clean, to proper grade, and readily accessible for operation of the valve.

Contractor shall adjust the gas valve manhole to finish grade prior to placement of asphalt pavement. After-the-fact cutting of new asphalt for adjustments is not accepted. Any adjustment(s) requiring cutting of new asphalt shall not be paid and shall be deducted from the plan quantity.

Article 3.4 Measurement

Adjustment of gas valve manholes will be measured per unit, complete in place.

Article 3.5 Basis of Payment

Payment for this Work shall be in accordance with Division 10, Section 10.07 - Measurement and Payment, and shall include full payment for all Work described in this Section.

Payment shall be made under the following unit:

ITEM	UNIT
Adjust Gas Valve Manhole to Finish Grade	Each

SECTION 70.04 ADJUST ELECTRIC/TELEPHONE MANHOLE

Article 4.1 General

The Work under this Section consists of providing all operations and materials required for the preparation and adjustment of electric/telephone manhole lids, frames, and rings to finish grade.

Article 4.2 Materials

All concrete and cement used in the adjustment of electrical/telephone manholes shall conform to the requirements for manholes as specified in Division 55, Section 55.05 - Manholes and Catch Basin Manholes.

The Contractor may utilize Neenah Manhole Adjusting Rings P1979-077, Part No: 19790053, Catalog 1797-01, or an approved equal, for adjusting the electrical and telephone manhole to finish grade.

Article 4.3 Construction

All manholes to be adjusted shall be inspected by the Contractor, the Engineer, and the applicable utility's representative to verify size, condition, and any necessary replacement of the existing lids. Inspection, replacement, and cost of lids will be considered incidental to the Contract and no separate payment shall be made. Manholes may be adjusted by installing grade rings and/or grouting. Manhole adjustment by grouting shall consist of bringing the manhole grade ring and lid to final grade, then grouting underneath the ring. The Contractor shall have an assortment of adjustment rings of various thicknesses on the project site to preclude after-the-fact asphalt cutting for adjustment.

After-the-fact cutting of new asphalt for adjustments will not be accepted; rings will be inventoried before authorization to pave is given. Any utility adjustments requiring cutting of new asphalt will not be paid and will be deducted from the plan quantity.

The Contractor shall contact the appropriate utility at least forty-eight (48) hours prior to beginning the overlay operation, and to schedule a representative of that utility to be on site to supervise the manhole adjustments to finish grade.

Prior to placement of any grade ring adjustment, the existing seat should be cleaned and all loose material shall be blown out or wire brushed to ensure a proper fit.

Article 4.4 Measurement

Adjustments of electric/telephone manholes to finish grade shall be measured per unit, complete in place, and adjusted to the required grade.

Article 4.5 Basis of Payment

Payment for this Work shall be in accordance with Division 10, Section 10.07 - Measurement and Payment, and shall include full payment for all Work described in this Section.

Payment shall be made under the following units:

ITEM	UNIT
Adjust Electric Manhole (Type)	Each
Adjust Telephone Manhole (Type)	Each

SECTION 70.05 ADJUST ELECTRICAL VAULT

Article 5.1 General

The Work under this Section consists of performing all operations pertaining to materials, equipment, and personnel required for the preparation and adjustment of a high voltage electrical vault to finish grade. The high voltage electrical vault is typically located within a sidewalk adjacent to a building or in an alleyway and is specifically located on the Drawings.

Article 5.2 Materials

All Portland Cement Concrete utilized in the adjustment of the electrical vault shall conform to the requirements as specified in Division 55, Section 55.05 - Manholes and Catch Basin Manholes. The joint sealing compound utilized to seal the joint between the electrical vault's lid and walls shall be premolded plastic gasket or an approved equal.

Article 5.3 Construction

No later than forty-eight (48) hours prior to commencement of Work on adjustment of the electrical vault, Contractor shall contact the Utility Line Superintendent of ML&P. This vault contains energized high-voltage circuits and all Work in and immediately surrounding the vault shall be monitored and supervised by a Journeyman Power Lineman with a current State of Alaska Certificate of Fitness. The Contractor shall be responsible for protecting the Contractor's personnel and the general public from the open vault as well as from the hazardous high voltages present within the vault.

The electrical vault lid to be adjusted typically contains two manhole frames and covers and forms an integral part of the sidewalk, alleyway, or other finished surface. The vault lid shall match the final finish grade of the finished surface in which it is installed. Any proposed adjacent curb shall be in accordance with Standard Detail 30-1 as identified on the Drawings. To lower the vault lid, the Contractor shall remove a portion of the lid in order that the top of the vault lid match the proposed top back of curb elevation with a two percent (2%) transverse slope. The existing area of contact between the vault lid and vault walls is typically a rabbet joint and not a flat surface.

Prior to removal of the electrical vault lid, Contractor, Engineer, and an ML&P representative shall inspect and verify the condition of the vault lid and vault structure. After verification of condition, Contractor shall submit a drawing detailing how the vault lid will be lowered. The drawing shall be approved in writing by ML&P. The vault lid shall be adjusted by cutting and removing a portion of the vault lid. The vault lid shall be cut to match the existing vault wall rabbet joint. The rabbet joint shall be sealed to provide a watertight seal.

Prior to replacement of the vault lid, the vault lid and vault structure shall be inspected by Contractor, Engineer, and an ML&P representative to verify adjustments. Any Work, personnel, and/or materials required to properly correct problems shall be at Contractor's

expense. After ML&P's written receipt of approval, Contractor shall reset the vault lid at the correct adjusted elevation and grade.

Contractor may propose an alternate adjustment method. This alternate method must be submitted to an ML&P representative in writing. ML&P shall have sole discretion on the approval of the Contractor's proposed alternate method. If an alternate method is approved, no added or separate payment shall be made.

Article 5.4 Measurement

The method of measurement for all Work in this Section shall be a lump sum. The lump sum cost for adjusting the electrical vault to finish grade shall include all labor, materials, and equipment. The bid item shall include all required usable and unusable excavation, classified fill and backfill material, compaction, concrete cutting and removal, vault lid removal and replacement, traffic control, and required personnel.

Article 5.5 Basis of Payment

Payment for this Work shall be in accordance with Division 10, Section 10.07 - Measurement and Payment, and shall include full payment for all Work described in this Section.

Payment shall be made under the following unit:

ITEM	UNIT
Adjust Electrical Vault	Each

SECTION 70.06 ADJUST UTILIDUCT LID

Article 6.1 General

The Work under this Section consists of all operations pertaining to the adjustment, either up or down, of an existing ACS/ML&P concrete utiliduct lid as directed by the Engineer.

Article 6.2 Materials

All Portland Concrete Cement utilized in the adjustment of the utiliduct lid shall conform to the requirements as specified in Division 55, Section 55.05 - Manholes and Catch Basin Manholes.

Article 6.3 Construction

The utiliduct to be adjusted typically consists of a dual channel concrete structure with a structural concrete top/lid. Each utiliduct lid section is typically approximately five feet (5') in width and eight feet (8') in length. Prior to adjustment of the utiliduct lid, Contractor, Engineer, and a representative from both ACS and ML&P shall inspect and verify the condition of the utiliduct lid and utiliduct structure. After verification of condition, Contractor shall utilize the method of adjustment in accordance to the Utiliduct Lid Adjustment Detail available from ML&P. The utiliduct lid shall match the finished surface in which it is installed.

Contractor may submit an alternative method adjustment to the Engineer detailing how the utiliduct lid will be adjusted. The alternative method of adjustment shall not reduce the existing load rating of the utiliduct and utiliduct lid. The alternative method of adjustment of the utiliduct lid shall be designed, stamped, and signed by a registered professional engineer licensed by the State of Alaska. Contractor shall submit an ACS and ML&P approved substitution request in accordance with Division 10, Section 10.05, Article 5.7 - Materials. All costs associated with preparing the design of an alternative utiliduct lid adjustment and obtaining the necessary utility approvals prior to submitting the substitution request shall be considered incidental to this item and no additional payment will be made.

No later than forty-eight (48) hours prior to commencement of Work on adjustment of the utiliduct, Contractor shall contact both the Outside Plant Construction Supervisor of ACS and the ML&P Line Superintendent. The utiliduct contains telephone and energized high-voltage circuits. All Work in and immediately surrounding the utiliduct shall be monitored and supervised by a Journeyman Power Lineman with a current State of Alaska Certificate of Fitness. The Contractor shall be responsible for protecting Contractor's personnel and the general public from the open utiliduct, as well as the hazardous high-voltages and telephone lines present within the utiliduct. Should ACS's and/or ML&P's cables be damaged, ACS and/or ML&P will install new cables at Contractor's expense.

Contractor shall adjust the utiliduct lid to finish grade prior to placement of asphalt pavement. After-the-fact cutting of new asphalt for adjustment(s) will not be accepted. Any adjustment requiring cutting of new asphalt will not be paid and will be deducted from the plan quantity.

Article 6.4 Measurement

The method of measurement for all Work in this Section shall be measured in linear feet along the top face at the centerline of the utiliduct, complete in place, and adjusted to finish grade. The bid item shall include all required material, usable and unusable excavation, classified fill and backfill, compaction, Portland Concrete Cement, traffic control, required personnel, and equipment.

Article 6.5 Basis of Payment

Payment for this Work shall be in accordance with Division 10, Section 10.07 - Measurement and Payment, and shall include full payment for all Work described in this Section.

Payment shall be made under the following unit:

ITEM	UNIT
Adjust Utiliduct Lid	Linear Feet

SECTION 70.07 REMOVE PIPE

Article 7.1 General

The Work under this Section consists of performing all operations pertaining to the removal and disposal or salvage of existing pipes (of whatever size of pipe encountered), when encountered in the excavation and/or as directed by the Engineer.

Article 7.2 Construction

Contractor shall remove salvageable pipes and deliver the pipes to a location as directed by the Engineer. Contractor shall provide a disposal site for non-salvageable material in accordance with the provisions of Division 10, Section 10.04, Article 4.9 - Disposal Sites.

Excavation required in the removal of the pipes is incidental to this bid item. Contractor shall backfill the excavation with suitable, non-frost-susceptible materials and compact it to not less than ninety-five percent (95%) of maximum density as directed by the Engineer.

Article 7.3 Measurement

Removal of pipes is measured per linear foot without regard to pipe size. Removal of electrical conduit of whatever size and type is incidental to the Contract, unless provided for elsewhere in the Contract.

Article 7.4 Basis of Payment

Payment for this Work shall be in accordance with Division 10, Section 10.07 - Measurement and Payment, and shall include full payment for all Work described in this Section.

Payment shall be made under the following unit:

ITEM	UNIT
Remove Pipe	Linear Foot

SECTION 70.08 RESET FENCE

Article 8.1 General

The Work under this Section consists of providing all operations pertaining to removing, storing, and resetting existing fence whatever height and type of fencing material as indicated on the Drawings or as directed by the Engineer.

Article 8.2 Material

All materials which can be reused shall be salvaged from the existing fence. Those materials which cannot be salvaged or are damaged by the Contractor's operations shall be replaced, at the Contractor's expense, with new materials which as nearly as possible duplicate the kind and quality of materials in the original installation.

Nails, staples, fastening wires or devices, and all materials required for the construction of such anchors, end posts or other portions of the fence which can be replaced more efficiently than they can be moved, shall be furnished by the Contractor.

If the property owner elects to replace any of the existing fencing materials with other materials in better condition, he shall furnish and deliver such materials to the site of the Work, upon the approval of the Engineer and the Contractor.

Article 8.3 Construction

The fence shall be set in close conformity with the property line shown on the Drawings or as directed by the Engineer. Posts and anchors shall be set at the same depth and spacing as in the original fence. Wire shall be drawn taut but care shall be taken to avoid over-stressing the salvaged materials. Permanent anchors, end posts or other parts which cannot be economically moved shall be replaced by equivalent construction. If any new materials require painting, they shall be painted to match the original materials as nearly as possible. If a match cannot be attained to the satisfaction of the Engineer, the entire fence will be painted. The reset fence shall be placed in at least as good condition as the existing fence before it was moved.

Article 8.4 Measurement

Resetting fence will be measured by length in linear feet, complete and accepted in its final position.

Article 8.5 Basis of Payment

Payment for this Work shall be in accordance with Division 10, Section 10.07 - Measurement and Payment, and shall include full payment for all Work described in this Section.

Payment shall be made under the following unit:

ITEM	UNIT
Remove and Reset Fence	Linear Foot
Reset Fence	Linear Foot

SECTION 70.09 RESET PARKING METERS

Article 9.1 General

The Work under this Section consists of performing all operations pertaining to furnishing all equipment, materials, and personnel to remove and reset existing parking meter post assemblies.

Article 9.2 Construction

All posts shall be placed in excavated holes. Depth of embedment shall be as shown on Drawings, unless otherwise directed.

Surplus excavated material shall be disposed of by the Contractor and shall be incidental to this bid item.

All materials and finished parking meter installations are subject to inspection and acceptance in place by the Anchorage Parking Authority. Contact the Anchorage Parking Authority twenty-four (24) hours prior to removal.

Article 9.3 Measurement

Removal and resetting of existing parking meters shall be measured per each parking meter post assembly, reset and accepted in final position. Parking meter and post components damaged or destroyed due to the Contractor's operation shall be replaced by the Contractor at no additional expense to the Owner. One post equipped with two or more parking meters shall be considered a single parking meter assembly.

Article 9.4 Basis of Payment

Payment for this Work shall be in accordance with Division 10, Section 10.07 - Measurement and Payment, and shall include full payment for all Work described in this Section.

Payment shall be made under the following unit:

ITEM	UNIT
Remove and Reset Parking Meter	Each

SECTION 70.10 TRAFFIC MARKINGS

Article 10.1 General

The Work under this Section shall consist of performing all operations pertaining to furnishing all materials; placing painted and methyl methacrylate traffic markings and applying glass spheres thereto; and retroreflective preformed patterned pavement tape traffic markings. Contractor shall provide all Work in accordance with these specifications; at the locations shown on the Drawings; the Manual of Uniform Traffic Control Devices (MUTCD), and the Alaska Traffic Manual.

Article 10.2 Materials

A. Paint for Traffic Markings - General Requirements

1. The Contractor shall furnish the name of the company that will manufacture the paint and the location of the plant from where shipments will be made. No material shall be shipped by the manufacturer until it has been sampled, tested, and approved.

2. Traffic Lane Paint shall conform to the current State Specifications.

B. Glass Spheres for Reflectorizing Highway Pavement Markings

Reflective Glass Beads shall conform to the current State Specifications, and shall be supplied with a moisture-resistant coating.

C. *(deleted)*

D. Methyl Methacrylate Pavement Markings

1. General Requirements:

a. Contractor shall furnish Methyl methacrylate traffic markings which are manufactured and formulated from new material and are free from defects and imperfections that might adversely affect the serviceability of the finished product. Contractor shall furnish Traffic markings free from dirt and other foreign material such as, but not limited to, surface oils or existing road marking material, and shall cure to a tough serviceable film within the time specified by the manufacturer.

b. Methyl methacrylate traffic markings which are a spray-applied, ambient temperature curing, 2-component system for application on either asphalt or cement concrete surfaces. Traffic markings shall be composed of a Part “A” methyl methacrylate based resin and Part “B” benzoyl peroxide in liquid plasticizer. The mix ratio shall be four (4) parts of “A” to one (1) part of “B.”

c. Glass beads for drop-on applications recommended in writing by the traffic marking material manufacturer and approved by the Engineer.

d. Contractor shall furnish Methyl methacrylate traffic markings Dura-Stripe Type V manufactured by:

TMT – PATHWAY
1675 Commercial Street N.E.
Salem, Oregon 97303
Phone: 800-835-3357
FAX: 800-774-8464

or an approved equal.

Article 10.3 Construction

A. General

This Work shall be done as soon as possible after paving is completed to facilitate traffic.

B. Paint Color

All pavement markings shall conform to the colors shown on the Drawings.

C. Preparation of Surface

Paint will not be applied to pavements which are excessively dirty, damp, or cold. Paint shall not be applied when the pavement temperature is less than forty degree Fahrenheit (40°F). All dirt, oil, grease, and other foreign matter shall be removed from the areas of the pavement upon which the traffic markings are to be painted by a method approved by the Engineer.

D. Types of Lines

The type and color of the lines shall be as shown on the Drawings.

E. Width of Lines

The width and spacing of all lines shall be shown on the Drawings.

F. Application

1. Paint

a. The paint shall be applied with atomizing spray type striping machine, approved by the Engineer. The markings shall have clear-cut edges, true and smooth alignment and uniform film thickness. The wet film

thickness shall be twenty (20) mils with a nominal variation not to exceed two (2) mils.

b. The wet film thickness of the in-place paint shall be measured as follows:

Convenient to the location where the road service lines will be placed, test lines shall be laid to adjust the pavement-marking machine. In the path of the test line laid without glass spheres, place a weighted sheet of aluminum foil eighteen by eleven inches (18" x 11"), thumbtacked to a three-quarter inch (3/4") plywood board. Immediately after the motorized striper (spraying a four inch (4") strip along the eighteen inch (18") dimension of aluminum foil) passes over the aluminum foil, quickly roll it up, slip an elastic band over the roll, and weigh it to the nearest 0.1 gram within thirty (30) seconds from the net weight of paint on the foil and the weight per gallon of the sample, calculate the film thickness using the following formula:

$$\text{Film thickness, in} = \frac{A \times 231}{453.6 \times 18 \times 4 \times B}$$

$$= \frac{A \times 0.007073}{B}$$

Where: A = Weight of paint on foil in grams.

B = Weight per gallon of sample in pounds.

2. Glass Beads

Glass beads shall be applied over the wet painted stripes in a uniform pattern at the rate of five pounds (5 lbs) of glass beads per gallon of paint. The bead dispensers shall be of a type that will mechanically and automatically give such performance. Glass beads shall be applied to all painted traffic markings by the drop-on method.

3. *(deleted)*

4. Methyl Methacrylate

a. Contractor shall prepare the roadway areas to receive the methyl methacrylate pavement markings in accordance with this Section and the manufacturer's recommendations. Contractor shall submit a current copy of manufacturer's recommendations at least 5 working days prior to application of traffic markings.

b. Contractor shall apply methyl methacrylate pavement markings as identified in the Contract Documents. The thickness is measured without glass beads.

c. Contractor shall provide a manufacturer's representative to be present on the first day of striping for each type (sprayed or extruded) and additional days as required by the Engineer.

d. Contractor shall not apply striping to new asphalt/P.C.C. until the asphalt/P.C.C. has cured to the satisfaction of manufacturer's representative or the Engineer.

e. The minimum application rate of beading on sprayed markings is twenty pounds (20 lbs) of beads per gallon and twelve pounds (12 ls) of beads per one hundred (100) square feet for extruded markings.

f. The surface temperature of the roadway shall be in the range of 30° to 105° Fahrenheit for stripe application. Contractor shall thoroughly clean and dry the roadway surface.

g. Contractor shall apply methyl methacrylate stripe material with equipment designed and capable of properly mixing at the point and time of application in accordance with the manufacturer's recommendations.

H. Pavement Marking Removal

Pavement markings shall be removed to the fullest extent possible from the pavement by any method that does not materially damage the surface or texture of the pavement or surfacing. Sand or other material deposited on the pavement as a result of removing traffic stripes and markings shall be removed as the Work progresses. Accumulations of sand or other material which might interfere with drainage or might constitute a hazard to traffic are not permitted.

Pavement markings no longer applicable which may create confusion in the minds of motorists shall be removed or obliterated before any change is made in the traffic pattern. Painting over markings is prohibited.

Pavement markings shall be removed by such methods that will cause the least possible damage to the pavement or surfacing. Any damage to the pavement or surfacing caused by pavement marking removal shall be repaired by the Contractor at his expense by acceptable methods.

Where blast cleaning is used for the removal of pavement markings or for removal of objectionable material, and such removal operation is being performed within ten feet (10') of a lane occupied by public traffic, the residue, including dust shall be removed immediately after contact between the sand and the surface being treated. Such removal shall be by a vacuum attachment operating concurrently with the blast cleaning operation, or by other approved methods.

I. Preliminary Spotting

The Contractor will provide the necessary control points at intervals including all changes of direction and changes in the basic configuration of striping such as at the beginning and ending of no-passing zones on a two-way, two-lane roadway.

These points shall be used in preliminary spotting of lines before striping is commenced. The Contractor shall be responsible for preliminary spotting of the lines to be painted and he must obtain approval from the Engineer for all spotting before striping may begin. Preliminary spotting is required for all longitudinal striping.

J. Inlaid Protected Markings

Apply with certified extrusion equipment. Grind the slot to the depth indicated in the Contract Documents and the dimensions specified, using a grinder capable of grinding the slot to the specified depth and width in a single pass. After grinding, obtain approval before placing marking material.

1. Dispose of asphalt grinding according to applicable federal, state, and local regulations.
2. Depth of Inlay Slot. Depth of material shall be measured from the peaks created by the groves to the visible surface of the markings. Minimum depth shall be as identified in the Contract Documents with a nominal variation not to exceed forty (40) mils.
3. Thickness of Inlaid Marking Material. Fill inlay area completely from the bottom of the inlay to the surface of the pavement. Do not overfill the slots.

K. Tolerances of Lane Striping

The Contractor shall keep his work within the following allowable tolerances:

1. Length of Stripe. The longitudinal error within a forty foot (40') length of lane line shall not be more than plus or minus six inches (±6").
2. Width of Stripe. The width of stripe shall not vary more than plus or minus one-half inch (±1/2").
3. Lane Width. The width of lanes shall not vary more than plus or minus four inches (±4") from the widths shown on the Drawings, measured from the edge of pavement or edge of traveled way to center of lane line or between the centers of adjacent lane lines.
4. Stripes on Tangents. Stripes on tangents shall not vary more than plus or minus one inch (1") laterally within a distance of one hundred feet (100') when using the edge of the stripe as reference.
5. Stripes on Curves. Stripes on curves shall be uniform in alignment with no apparent deviations from the true curvature.
6. All Stripes. All stripes shall remain within four inches (4") from the planed alignment when measured to the center of the stripe.
7. Inlay Slot. The inlay slot shall be as identified in the Contract Documents with a nominal variation not to exceed forty (40) mils.

Traffic markings not within the above tolerances will be considered unacceptable under this Section and shall be replaced by the Contractor at no additional cost to the Municipality.

Article 10.4 Measurement

Traffic markings shall be measured by linear foot of traffic marking of the specified width and color complete in place and accepted. Traffic markings consisting of words and symbols shall be paid per item complete in place and accepted.

Removal of traffic stripes and pavement markings as well as repair of any damaged pavement or surfacing caused by the pavement marking removal operations shall be incidental to other items of Work.

Payment for traffic markings is full compensation for preparing and cleaning of pavement, application of painted traffic markings and applying glass beads or spheres thereto, furnishing paint, glass beads, and all other material and equipment necessary to complete the Work described in this Section.

Article 10.5 Basis of Payment

Payment for this Work shall be in accordance with Division 10, Section 10.07 - Measurement and Payment, and shall include full payment for all Work described in this Section.

Payment shall be made under the following unit:

ITEM	UNIT
Traffic Markings (Type) (width)	Linear Foot
Traffic Markings (Type) (words & symbols)	Each
Inlaid Traffic Markings (Type) (width) (depth)	Linear Foot
Inlaid Traffic Markings (Type) (words & symbols) (depth)	Each

THIS PAGE INTENTIONALLY LEFT BLANK

SECTION 70.11 STANDARD SIGNS

Article 11.1 General

This Work shall consist of furnishing and installing signs, guide markers, object markers and mileposts. The sign location and type of installation will be as shown on the Drawings or as directed by the Engineer. Work under this Section shall also include removal and relocation, as well as removal and disposal of existing signs, mileposts, and markers. Work under this Section shall also include removal and resetting of sign post assemblies to original location or as directed by the Engineer.

Article 11.2 Materials

Fabricate all standard regulatory, warning, and guide signs for permanent installation with Type IX reflective sheetings that conform to ASTM D4956 and single-span aluminum panel substrates, unless designated otherwise on the Drawings.

All orange construction and maintenance signs shall be fabricated with Type IX (encapsulated lens) reflective sheeting.

All new standard signs for permanent installation shall be of new materials. All sign layouts shall be in accordance with "Alaska Sign Design Specifications." Any sign delivered or installed which does not conform to these specifications shall be replaced by the Contractor at no additional cost to the Municipality.

Concrete for sign post foundations shall conform to Class B-3 per Division 30, Section 30.01, Article 1.4 - Mix.

In the following specifications, a sign's height and width refers to an installed sign's vertical and horizontal dimensions, respectively, and to the length of the sides for diamond shaped signs.

A. Aluminum Sheet

Contractor shall provide sheet aluminum sign panels in one of the following alloys: 6061-T6, 5052-H36, or 5052-H38 that conform to ASTM B-209. The thickness of the aluminum sheet shall be 0.125 inches unless otherwise specified. Alloy and temper designations shall be verified by mill certification.

Treat the aluminum base metal sheets with a conversion coating for aluminum conforming to ASTM B-921 or ASTM B-449, Class 2 standards. The cleaned and coated base metal shall be handled only by mechanical device or by operators wearing clean cotton or rubber gloves. After the cleaning and coating operation, the panels shall be protected at all times from contact or exposure to greases, oils, dust, or other contaminants.

Use single piece sign panels for all signs up to 48 inches by 72 inches. For signs with one or both dimensions larger than the base 48 inch by 72 inch sign panel, assemble multiple single-piece sign panels according to the following:

1. For signs up to 48 inches high, assemble the single-piece aluminum panels with the 72 inch dimension set horizontally.

2. For signs between 48.01 and 72.01 inches high, assemble the single-piece aluminum panels with the longer dimension set vertically.

3. For signs between 72.01 and 96.01 inches high, assemble two rows of single-piece aluminum panels with the 72 inch dimensions set horizontally.

The dimensional tolerance of the panels shall be one-sixteenth inch (1/16”). Metal panels shall be cut to size and shape and shall be free of buckles, warp, dents, cockles, burrs, and any other defects resulting from fabrication. All possible fabrication, including shearing, cutting and punching of holes shall be completed prior to the base metal preparation.

B. Sheet Reflective Materials

Use reflective sheetings that are part of a matched component system made by a single manufacturer. The system shall include the sheetings, process colors, clear coatings, sealants, electronically cuttable films, protective overlay films, and recommended application equipment.

The sheetings shall also pass all performance requirements specified in ASTM D4956 for type IX reflective sheetings, when tested according to the methods specified therein, including the supplementary fungus resistance requirement.

The sheeting manufacturer shall furnish third party test results that verify their sheeting materials meet all performance requirements of ASTM D4956. If the results of the accelerated outdoor weathering test are not yet available, furnish the results of the supplementary artificially accelerated weathering test and provide the date the regular test results will be available.

Furnish reflective sheetings with a class 1 adhesive backing that meets the requirements of ASTM D4956.

Fabricate signs according to the manufacturer’s written recommendations, using the process colors, coatings, sealants, and films made by the manufacturer of the reflective sheetings, and the application equipment recommended by the sheeting manufacturer.

Apply the reflective sheetings with no splices to those aluminum panels that can be oriented to fit on a rectangle with the smaller dimension equal to or less than forty-eight inches (48”). For all other sign panels, apply the reflective sheetings to form butt splices oriented to most efficiently utilize the sheeting material, except no splices are allowed within two inches (2”) of the edge of a sign and in the length of reflective sheetings.

When making the butt splices, match the adjacent pieces as recommended by the manufacturer to assure uniform day color and night appearance. Provide a gap up to one-sixteenth inch (1/16”) wide between the pieces of reflective sheeting.

Seal all cut edges of the reflective sheetings with sealant recommended by the sheeting manufacturer, including legends.

C. Letters, Numerals, Arrows, Symbols, Border

Letters, numerals, arrows, symbols, border, and other features of the sign messages shall be of the type, size, and series as specified by the Alaska Traffic Manual or the Alaska Sign Design Specifications.

Completed letters, numerals, and other units shall be formed to provide continuous stroke width with smooth edges and shall present a flat surface free of warp, blisters, wrinkles, burrs, and splinters.

Fabricate the legend on signs using one of the following processes. For signs fabricated using the two screened processes, apply a clear coat over the entire face of each sign using a manufacturer recommended product.

1. For signs with a black legend, apply opaque black ink to form the legend on the reflective sheeting using the silk screened process.

2. For signs with a white legend on a colored background, apply transparent ink to all areas of the white reflective sheeting, except the legend, to form the background using the reverse silk screened process.

3. Apply electronically cut colored films that include adhesive to the reflective sheeting, similar to 1 and 2.

4. Cut the legends from the requisite color of type IX reflective sheetings and apply them to the reflective sheeting. Orient all elements of the legend in the same direction on the reflective sheeting before cutting them out.

D. Frames

All rectangular signs, over fifty-three inches (53”) measured along the horizontal axis, and all diamond shape signs sixty inches by sixty inches (60” x 60”) and larger shall be framed unless otherwise specified. The frames shall be constructed of aluminum as indicated on the Drawings. All framing dimensions shall have a one-eighth inch (1/8”) tolerance unless otherwise specified.

The frame shall be affixed to the sign with three-sixteenth inch (3/16”) diameter aluminum rivets. The maximum rivet spacing shall be twelve inches (12”) on centers. No rivets shall be placed closer than three-eighths inch (3/8”) from the edge of the aluminum face sheet.

All joints of the aluminum frame may be welded with an inert gas shielded - arc welding process using 4043 electrode filling wire in accordance with good shop practice. The width of the fillet shall be equal to the wall thickness of the smallest framing member being welded.

E. Test Procedures and Inspections

1. Adherence

The test panel, after a 72-hour curing time, shall be immersed in 95°F. ±3° water for a period of 24 hours. Immediately after removal from the bath, the reflective sheeting shall be sufficiently bonded so that it cannot be readily removed from the aluminum surface with a one inch (1") round nose spatula. If the sheeting can be peeled rather than chipped from the surface, the bond is considered unsatisfactory.

2. Solvent Resistance

Test shall be in accordance with Federal Specification L-S300B 4.3.6

3. Accelerated Weathering

Test shall be in accordance with Federal Specification L-S 300B 4.3.9.

4. Resistance to Heat, Cold, and Humidity

Test shall be in accordance with Federal Specification L-S-300B 4.3.10.

5. Tensile Strength and Elongation

Test shall be in accordance with Federal Specification L-S 300B 4.3.15.

F. Post Materials

Provide sign posts that conform to the following specifications for installing the post mounted signs specified in the Drawings.

Perforated Steel Posts.

1. For sign posts, install perforated steel tubes that conform to ASTM A-653. Provide tubes fabricated from 0.105 inch thick (12 U.S. Standard Gauge) sheet steel zinc coated on both sides to minimum coating thickness designation G-90. Furnish tubes formed with square cross sections and sheet steels rolled from structural grade steel with 50 ksi yield strength.

2. All tubes shall be perforated along the centerline of each side for their entire length with seven-sixteenth inch (7/16") diameter holes on one inch (1") centers. All perforations shall be free from burrs.

3. Furnish perforated tubes that are straight and feature a smooth, uniform finish without splices. Consecutive one-quarter inch (1/4") size tubes shall telescope freely for a minimum length of ten feet.

4. Furnish the tube sizes specified in the Drawings in lengths that will provide one-piece sign posts when the signs are installed according to the Standard Details that apply, regardless of ground cross section.

Article 11.3 Construction

All sign post foundations shall be cast in excavated holes. Depth of embedment shall be as shown on the Standard Details unless otherwise directed by the Engineer.

Surplus excavated material shall be disposed of Cut each perforated tube to provide the sign mounting-height specified in the Section 70 detail that applies. Adjust each tube length to account for the height of the signs, the difference in elevation between the mounting height reference and the top of the foundation, and the one foot length inserted into the foundation. Remove all burrs from the cut end.

Guide Marker reflectors shall be installed after the posts have been set in place.

Sign panels shall be attached to posts, electroliers, traffic signal standards, bridge rails, piers, and abutments with fastening hardware of the types and sizes shown on the Standard Details. All fastening hardware shall be furnished by the Contractor.

Existing signs and mile posts that are removed and relocated shall be placed on a new base and shall conform to the Drawings or as directed by the Engineer.

Contractor shall salvage and deliver signs, posts, and associated hardware designated on the Drawings for Salvage to the Municipal Traffic Sign Shop, 343-4384. Contractor shall remove sign from post before removal and delivery to the Municipal Traffic Sign Shop. Contractor shall remove the sign(s) and associated hardware without damaging the post or sign face. Contractor shall replace sign components damaged or destroyed due to Contractor's operations at no cost to the Municipality.

Inspection: All materials and finished signs are subject to inspection and acceptance in place. All surfaces exposed to weathering shall be free of any defects in the coating that may impair the serviceability or detract from the general appearance or color match. The finished signs shall be clean and free from all chatter marks, burrs, sharp edges, loose rivets, delaminated reflective sheeting, and aluminum marks. No repairs shall be made to the face sheet. All signs not conforming to these Specifications shall be rejected and shall be replaced by the Contractor at no additional expense to the Municipality.

Article 11.4 Measurement

The quantity of Standard Regulatory, Warning, and Guide Signs for permanent installation to be paid for shall be the total square footage of legend bearing sign and panel erected in place. No deductions in quantity for corner rounding shall be made. Nominal dimensions for sign sizes indicated on the Drawings shall be used for the purpose of calculating sign pay quantities.

Removal and relocation of existing signs shall be measured per each sign, completed and accepted in final position. Sign components damaged or destroyed due to the

Contractor's operation shall be replaced by the Contractor at no additional expense to the Owner. Object Markers and Guide Markers shall be measured per each, complete in place. One post equipped with two reflectors shall be considered a single marker. One signpost equipped with two or more signs is a single sign assembly. Salvage of existing signs and delivery to the Sign Shop shall be incidental to the Contract unless a specific bid item is provided in the Bid Proposal.

Article 11.5 Basis of Payment

Payment for this Work shall be in accordance with Division 10, Section 10.07 - Measurement and Payment, and shall include full payment for all Work described in this Section.

Payment will be made under the following units:

ITEM	UNIT
Standard Sign	Square Foot
Remove and Relocate Signs	Each
Remove and Relocate Mile Posts	Each
Remove and Reset Sign Assembly	Each
Salvage Sign	Each

THIS PAGE INTENTIONALLY LEFT BLANK

THIS PAGE INTENTIONALLY LEFT BLANK

SECTION 70.12 TRAFFIC MAINTENANCE

Article 12.1 General

The Work under this Section consists of performing all the necessary measures to protect and control traffic during the life of the individual project including, but not limited to, furnishing, erecting, maintaining, replacing, cleaning, moving and removing the traffic control devices, construction signs, portable concrete barriers, safety fences, and flagging required to safeguard the traveling public and all administrative responsibilities necessary to implement this Work.

The Contractor shall maintain all roadways, pedestrian, transit, and bicycle facilities within the project limits, and construct and maintain such approaches, crossings, intersections, and other features as may be necessary throughout the life of the Contract. The Contractor shall also have a powered broom (pick-up sweeper type) and water truck with high-pressure capabilities to clean the paved surfaces and along the haul routes.

A Traffic Control Plan (TCP) is required for this project. The Contractor shall provide a TCP approved by the Traffic Engineer, and when the project limits include State right-of-way, the Alaska Department of Transportation and Public Facilities (ADOT&PF) Regional Traffic Engineer prior to commencement of this project in accordance with the provisions of Division 10, Section 10.04, Article 4.13 - Traffic Control Plan. The Contractor may submit approved amendments to the TCP prior to commencement of the project. All approvals shall be obtained by the Contractor and shall be considered incidental to the Contract and no separate payment shall be made. When the project limits include state right-of-way, the Contractor shall notify ADOT&PF at least 48 hours before commencing construction.

The Contractor is required to have at least one International Municipal Signal Association (I.M.S.A.) or American Traffic Safety Services Association (A.T.S.S.A.) certified person on the job site during working hours for traffic control and implementation. The person designated will supply the Traffic Engineer with a 24-hour emergency telephone number.

All traffic channelization, detours, lane closures and/or street closures shall conform to the TCP and Division 10, Section 10.04, Article 4.13 - Traffic Control Plan.

Article 12.2 Traffic Control Plan

A TCP is a graphic/text plan that describes traffic control to be used for facilitation of road users (drivers, bicyclists, and pedestrians, which include people with disabilities) through a temporary traffic control zone or an incident area. The degree of detail in the TCP depends on the nature and complexity of the project. The TCP may include, but not be limited to, such items as signs, portable concrete barriers, barricades, traffic cones, special signs, warning lights, portable changeable message board signs, flaggers, pilot cars, work zone pavement markings, temporary roadways, and all other items required to direct traffic through or around the construction zone in accordance with these specifications, the Manual on Uniform Traffic Control Devices (MUTCD), published by the US Department of Transportation, the State of Alaska Traffic Manual (ATM), and the Alaska Sign Design

Specifications (ASDS). These TCPs shall also address placement of traffic control devices including location, size, mounting height, and type. The details shown for signs shall include the code designation, size, and legend in accordance with the ATM and the Alaska Sign Design Specifications (ASDS). The TCP shall also indicate the method of safely routing pedestrian and bicycle traffic through or around the construction zone.

The Contractor shall submit a TCP for the project prepared by a certified traffic control designer. The TCP shall be approved by the Traffic Engineer and, if the Traffic Engineer determines that a state route is affected by the TCP, approved by the State of Alaska, Department of Transportation and Public Facilities Regional Traffic Engineer. The Contractor shall respond and make field changes as the Traffic Engineer directs.

In cases of emergency road closures or excavations, the Contractor may commence work without an approved TCP. All traffic control for the emergency work shall be done in compliance with all applicable federal, state, and municipal rules and regulations. The Contractor shall secure a permit and approved traffic control plan on the next working day after implementation of emergency traffic control.

No Work shall occur within rights-of-way or easements for public streets, highways, or other public improvement projects until the Contractor has implemented an approved TCP for the Work proposed. The number of signs indicated on the TCP is a minimum. If unsafe conditions occur, the Traffic Engineer may require additional signs/devices at no additional cost to the Owner.

Article 12.3 Pedestrian Traffic

The Contractor shall provide pedestrian access in accordance with the requirements of Division 10, Section 10.04, Article 4.10 - Protection of Persons and Property, and Article 4.12 - Public Convenience and Access.

In addition, the Contractor shall provide and maintain a pedestrian traffic route through the Project for the duration of the Project or until a permanent pedestrian walkway has been completed. The route shall be signed and delineated such that it is obvious and recognizable to the pedestrian. The route shall be established in a location within the Project limits, at a distance which will help to eliminate interference between pedestrians and construction operations. The location of the route may change throughout the duration of the project, depending on locations of construction operations, and each location shall be approved by the Traffic Engineer. Safety fencing shall be required along the pedestrian route as necessary to separate work zone from the pedestrian route.

Article 12.4 Work Site Traffic Supervisor

The Contractor shall provide a Work Site Traffic Supervisor whom shall be responsible for the Contractor's maintenance of traffic operations on a 24-hour basis. The Work Site Traffic Supervisor shall meet the following minimum requirements:

1. Is currently certified as a Work Site Traffic Supervisor by the American Traffic Safety Services Association (A.T.S.S.A.); or

2. Is currently certified as a Work Zone Traffic Safety Specialist or a Work Zone Safety Specialist by the International Municipal Signal Association (I.M.S.A.); or

3. Is currently certified as a Work Site Traffic Technician by A.T.S.S.A.

If the individual is certified under Items 2 or 3 above, the Contractor shall submit, prior to Work requiring traffic control, documentation that the individual has also obtained:

1. A minimum of 12 months of supervisory level work in Work Site Traffic Control; or

2. One year of having been in responsible charge of such Work. The term "in responsible charge" shall be construed to mean having been in a position of accountability for the selection of devices and for their placement in the traffic control system, or for the continued operation of the system. Having persons that actually perform the labor under one's control would satisfy this requirement. Provide at least one reference, including current address and telephone number, for each project which "in responsible charge" experience is claimed.

The Work Site Traffic Supervisor's duties shall include the following:

1. Understand the requirements of the ATM, the Drawings, and the Specifications.

2. Prepare the TCPs and public notices and coordinate traffic maintenance operations with the Traffic Engineer.

3. Inspect the condition and position of all traffic control devices in use on the Project and ensure that all traffic control devices are in proper working order, clean, visible, and conform to the approved TCP in use. The inspection shall occur daily on smaller projects and more frequently on more complex projects. All devices shall be inspected during hours of darkness so that effectiveness of the device placement can be evaluated and adjustments made, if required, to afford maximum nighttime visibility and delineation. These inspections shall be documented in a bound field book. The field book shall be made available to the Engineer for review on a daily basis and shall become the property of the Engineer upon completion of the Work.

4. Supervise the repair or replacement of damaged or missing traffic control devices.

5. Review and anticipate appropriate traffic maintenance needs and ensure that the proper traffic control devices necessary for safe and efficient traffic movement are available.

6. Hold weekly traffic safety meetings with the superintendents and foremen of the Contractor and subcontractors prior to beginning construction. The

Contractor shall provide the Traffic Engineer the opportunity to attend these meetings.

Article 12.5 Materials

Materials for traffic control devices shall conform to the requirements set forth below:

1. Signs. Permanent Construction Signs, Construction Signs, and Special Construction Signs including sign supports shall conform to the requirements of Section 70.11 - Standard Signs, ADOT&PF Standard Specifications for Highway Construction; the ATM; and the Alaska Sign Design Specifications (ASDS).

2. Portable Sign Supports. Contractor shall provide portable sign supports that are wind resistant with no external ballasting and capable of supporting a forty-eight by forty-eight inch (48" x 48") traffic control sign such that the height of the sign above the adjacent roadway surface conforms to the ATM. The sign support shall support the traffic control sign vertically.

3. Barricades and Vertical Panels. Contractor shall provide barricades and vertical panels that are constructed of wood, metal, or plastic, and conform to the requirements of the ATM. Type III barricades shall have a minimum width of eight feet (8'). Contractor shall equip barricades with warning lights.

4. Warning Lights. Contractor shall provide Type A (low intensity flashing), Type B (high intensity flashing), or Type C (steady burn) warning lights conforming to the requirements of the ATM.

5. Drums. Contractor shall provide plastic drums conforming to the requirements of the ATM.

6. Traffic Cones. Contractor shall provide traffic cones and/or tubular markers conforming to the requirements of the ATM. The minimum height is twenty-eight inches (28"). All cones and tubular markers shall be reflectorized.

7. Portable Changeable Message Board Signs. Contractor shall provide portable, truck- or trailer-mounted, changeable message board signs with a self-contained power supply for the sign that has the following features:

    a. Message sign panel large enough to display three lines of nine inch (9") high characters.

    b. Eight-character display per message line.

    c. Message modules containing at least 36 different preprogrammed messages (three line displays) to be selected by the Traffic Engineer.

    d. The capacity to create, preview, and display new messages and message sequences.

e. A waterproof, lockable cover for the controller keyboard.

f. An operator's manual, a service manual, and wiring diagram.

g. Quick release attachments on display panel cover.

h. Variable flash and sequence rates.

i. Manual and automatic dimming capability on lamp bulb matrix models.

j. Variable mounting height of at least seven feet (7') from the pavement to the bottom of the message sign panel.

k. The capacity to operate with a battery pack for two hours under full load.

8. Portable Concrete Barriers. Portable concrete barriers shall conform to the requirements of ADOT&PF Standard Drawing G-45. Portable concrete barriers shall be equipped with warning lights.

9. Work Zone Pavement Markings. Work zone pavement markings shall be either painted with glass beads or preformed marking tape (removable or non-removable).

Article 12.6 Public Notice

The Work Site Traffic Supervisor shall give notices of changes, delays, or lane/road closures to the following local officials and transportation organizations including, but not necessarily limited to:

1. Anchorage Chamber of Commerce
2. Alaska Travel Industry Association
3. Alaska Trucking Association
4. Alaska State Troopers
5. Alaska Court System
6. Anchorage Police Department
7. Anchorage Fire Department
8. Local Emergency Medical Services
9. Anchorage Public Transportation
10. ASD Pupil Transportation
11. U.S. Postal Service
12. Local Schools and Universities
13. MOA Parks and Recreation
14. Volunteer Fire Departments (applicable if operating in the project area)
15. Local Solid Waste Utilities

The Contractor shall also provide the Alaska State Troopers, Anchorage Police Department, and Anchorage Fire Department with a list of radio frequencies and cellular telephone numbers used on the project, and the 24-hour telephone numbers of the Work Site Traffic Supervisor and the Project Superintendent. This contact information shall be for alerting the Contractor of emergencies which will require passage of emergency vehicles through the project. When so notified, the Contractor shall use all equipment and effort necessary to expedite rapid passage.

Advertisement and/or public notice requirements shall be based on roadway classification in the Official Streets and Highways Plan (OSHP) for the Municipality of Anchorage.

- On streets listed as minor arterials and higher, the Contractor shall provide a minimum advertised public notice of seven (7) days in advance of the closure and seventy-two (72) hours of "on site" notice. The notice shall contain the days, times, and locations of the closure. The Contractor shall advertise the closure though the Municipality of Anchorage's construction project and closure website (www.anchorageroads.org) and subscriber mailing list.

- On streets listed as collectors, Contractor shall provide a minimum of seventy-two (72) hours of "on site" notice prior to the closure.

- No published advertisement is required on other streets.

The published advertisement shall be displayed through the www.anchorageroads.org website and subscriber mailing list. The Contractor shall provide the Traffic Department with the Contractor's name, effective dates of the closure, and detailed traffic information. The Traffic Department will publish the information electronically on a weekly basis until the completion of the project. The "on site" advertisement shall consist of changeable message boards or similar approved notification to motorists and pedestrians. Contractor shall promptly cancel advertisements after the closure is completed or the traffic control is removed.

Article 12.7 Traffic Control Devices

Prior to the start of construction operations, the Contractor shall erect such permanent and temporary traffic control devices as may be required by the approved Traffic Control Plan (TCP). Traffic control devices shall be operated only when they are needed and only those devices that apply to conditions that exist shall be used. Advisory speeds, when necessary, shall be provided in the TCP and approved by the Traffic Engineer.

Following the completion of Work in a closure area, all traffic control devices relating to the closure shall be removed. Sign panels that are not removed shall be entirely covered with either metal or plywood sheeting.

The Traffic Engineer may require a different TCP specifically for winter shutdowns.

Contractor shall keep clean reflective sheeting on signs, drums, barricades, and other devices. Contractor shall promptly replace any devices with scratches, rips, or tears in the sheeting deemed unacceptable by the Engineer at no additional expense to the Owner.

Article 12.8 Authority of the Engineer

When, in the opinion of the Engineer, conditions are such that the safety and/or convenience of the traveling public are adversely affected, the Engineer will immediately notify the Contractor in writing. The notice will state the defects, the corrective actions required, and the time required to complete such actions. In no case shall this time exceed twenty-four (24) hours. In the event that the Contractor fails to take the corrective actions within the specified time, (a) the Engineer will immediately direct that the offending operations cease until the defects are corrected, and (b) the Engineer reserves the right to order the corrective actions be accomplished by outside forces. The Engineer will deduct the cost of Work by outside forces from any moneys due or that may become due under the terms of this Contract.

Article 12.9 Execution

The Contractor shall maintain traffic control in accordance with the approved Traffic Control Plan (TCP). The Contractor shall submit a new TCP each time traffic control is revised. Approval of each new TCP is required.

The Contractor shall furnish all traffic control devices necessary to fulfill the requirements of this specification, including construction signs, barricades, portable concrete barriers, safety fence, and flaggers. Said traffic control devices are considered incidental to this item. All such devices shall conform to the Alaska Traffic Manual (ATM). Paved road detours and gravel pedestrian detours are also incidental to this item.

The Contractor shall protect and adequately delineate open trenches, ditches, pavement edge drop-offs, and other excavations and hazardous areas with barricades as required by OSHA. Open trenches with drops of two feet (2') or greater adjacent to the roadway shall have portable concrete barriers installed with sloping end(s). All barricades and portable concrete barriers in place at night shall have warning lights installed in accordance with the ATM.

Unless otherwise provided hereinafter, the Contractor shall maintain all roadways open to traffic. Temporary closure of residential, commercial, or street approaches requires prior approval of the Engineer. The Contractor shall provide access through the project for emergency vehicles. Contractor shall properly sign and/or flag all locations requiring redirection or stopping of the traveling public.

The Contractor's equipment shall stop at all points of intersection with the traveling public unless satisfactory traffic control measures, approved in writing by the Engineer, are installed and maintained by the Contractor.

Where required on the Drawings, the Contractor shall bypass traffic over a paved detour route. When no longer required, the detour shall be removed and the approaches obliterated. Construction of the detour will be considered incidental to bid item "Traffic Maintenance."

The Contractor shall provide flagger(s) any time operations may affect safety, or as directed by the ATM or the Engineer. Flagger(s) are required at all times when one-lane

traffic is in effect. All flagging operations shall conform to the procedures outlined in the ATM.

Article 12.10 Measurement

All Work in this Section is measured by lump sum and shall consist of all labor, materials, and equipment required to provide the Work Site Traffic Supervisor, all TCPs and TCP revisions, public notices, paved traffic detours, pedestrian and bicycle detours, and all traffic control devices. Work and materials required to provide temporary asphalt surfacing and temporary painted traffic markings shall not be paid separately and shall be considered incidental to the Work described in this Section.

Article 12.11 Basis of Payment

Payment for this Work shall be in accordance with Division 10, Section 10.07 - Measurement and Payment, and shall include full payment for all Work described in this Section.

Payment shall be made under the following unit:

ITEM	UNIT
Traffic Maintenance	Lump Sum

THIS PAGE INTENTIONALLY LEFT BLANK

SECTION 70.13 BOLLARDS

Article 13.1 General

The Work under this Section consists of all labor, equipment, and materials necessary to complete the construction of wood, concrete pipe, and removable steel bollards as shown on the Drawings. Where existing bollards are removed prior to reuse, Contractor shall erect "hasty" fence or snow fence to deter vandalism by motorized vehicles.

The following Applicable Standards shall be used:

AMERICAN SOCIETY FOR TESTING AND MATERIALS (ASTM)

ASTM A 36M (1997a) Carbon Structural Steel

ASTM A 123 (1989a) Zinc (Hot-Dipped Galvanized) Coatings on Iron and Steel Products

ASTM A 500 (1996) Cold-Formed Welded and Seamless Carbon Steel Structural Tubing in Rounds and Shapes

ASTM A 501 Standard Specification for Hot-Formed Welded and Seamless Carbon Steel Structural Tubing

ASTM A 615/A 615M Standard Specification for Deformed and Plain Billet-Steel Bars for Concrete Reinforcement

ASTM C 150 Portland Cement

West Coast Lumber Inspection Bureau standard grading and dressing rules

Western Wood Products Association standard grading and dressing rules.

Article 13.2 Materials

A. Wood Bollards

1. Storage and Protection: Protect lumber from weather. Store inside whenever possible.

2. Grading Rules: Standard grading and dressing rules of the West Coast Lumber Inspection Bureau or the Western Wood Products Association. Each piece of yard and structural lumber shall bear official grade mark of the appropriate bureau or association. Provide Common No. 1 or better Hem/Fir wood, surfaced four (4) sides unless otherwise noted on the Drawings, and kiln dried. Moisture content shall not exceed nineteen percent (19%).

3. Preservative Pressure Treatment

   a. Pressure-treat all wood in direct contact with ground with chromate copper arsenate, Type II (AWPA P-5) with a retention of 0.45 lbs. per

cubic foot of wood. Contractor shall submit a certificate of treatment to the Engineer for approval prior to use on the Project.

b. After treatment, wood shall be clean, of natural color and finish, non-corrosive, water repellent, paintable, odorless, dry, and non-staining.

c. Cut Wood bollards to length necessary for construction before preservative pressure treatment is applied.

4. Paint: Stain Wood bollards with two coats Color Shield '4000' Alkyd Flat stain, or approved equal. Color to be Russet Brown, or similar. Apply stain to clean dry surface, free of dust or dirt, in accordance with the manufacturer's recommendations and specifications.

B. Concrete Pipe Bollards

Contractor shall use only new products in construction and installation of concrete pipe bollards. Standard products of a manufacturer regularly engaged in the manufacture of such products. The materials provided shall be of a type with proven satisfactory use for at least two years.

1. Concrete

Portland cement shall conform to ASTM C 150 Types I, II, or III.

2. Finish

Finish shall be galvanized. Exposed surfaces and edges shall be rounded, polished, or sanded. Finish shall be non-toxic, non-glare, and resistant to corrosion

3. Galvanizing

After fabrication, hot-dip galvanized components in zinc in accordance with ASTM A 123. Remove Tailings and sharp protrusions formed as a result of the hot-dip process and burnish exposed edges.

4. Tubing

Provide Schedule 40 steel tubing of the size specified in the Drawings.

5. Paint

Prime Tubing and cover with two coats minimum of dark green powder coat paint in accordance with the manufacturer’s instructions. Top coat with two coats Yellow Carboline 139, unless guard post cover or sleeve is to be installed.

C. Removable Steel Bollards

1. Furnish hardware as necessary and as detailed for the project. Items include bolts, nuts, anchor bolts, washers, nuts, and rods (ASTM A-307). Hot-dip galvanize all bolts, nuts, washers, and plates in accordance with ASTM A-123.

2. Provide steel that conforms with ASTM A-36 structural carbon steel, shop fabricated and galvanized.

3. Painting: Etch galvanized surface with “Galvaprep.”

D. Guard Post Cover/Sleeve

Provide guard post covers molded from a durable polyethylene with ultra-violet (UV) stabilizers to ensure product life and color fastness.

Secure the polyethylene guard post cover or sleeve in accordance with the manufacturer’s recommendations. Provide Carsonite SAV-T Sleeve, the guard post cover or sleeve, or approved equal.

Article 13.3 Construction

A. Acceptance of Existing Surfaces

The Contractor shall verify that finished grade and other operations affecting mounting surfaces have been completed prior to the installation of bollards. Install Bollards plumb and true in accordance with the approved manufacturer's instructions or recommendations.

B. Installation

For concrete pipe bollard, provide footing as shown on Drawings. Slope drainage from tubing at two percent (2%) grade. Place concrete inside steel pipe or tubing for full extent. Rod concrete to remove air voids. Dome top to provide clean transition from top surface to bollard sides. Do not leave exposed edge. Provide brushed finish to concrete dome.

Install bollards plumb, level and true to line. Top of a row of bollards shall be maintained at a consistent level above adjacent ground.

C. Removable Bollards

1. Install bollard base plate flush with top of paved trail. Install bollards plumb, level, and true to line. Use only three-sixteenth inch (3/16") fillet welds. Grind all edges smooth.

2. Fasteners: Padlocks for removable bollards shall be American Lock, WWE Series 3560 purchased from Action Locksmith. Cores shall be keyed to

Municipality Of Anchorage cores matched to a 645 key. Installation of the cores must be authorized by Facilities Management at 343-8270. Padlocks are incidental to this pay item.

D. Clean Up

Clean the site of all materials associated with the installation. Clean surfaces of dirt, stains, filings, and other blemishes occurring from shipment and installation. Provide cleaning methods and agents according to manufacturer's instructions or as indicated. Remove excess concrete.

Article 13.4 Method of Measurement

Measurement will be based on complete units in place for all bollards.

Measurement for concrete pipe bollard with sleeve shall be for a concrete pipe bollard with polyethylene guard post cover or sleeve installed in place.

Measurement for “Remove Bollard” shall be for each bollard removed and disposed of as directed on the Drawings. Footings, anchoring devices, and other items shown on the Drawings shall be considered incidental to the bid item “Removable Bollard” and no separate payment shall be made.

Any other items required for a complete and finished installation shown on the Drawings are measured separately for payment purposes.

Article 13.5 Basis of Payment

Payment for this Work shall be in accordance with Division 10, Section 10.07 - Measurement and Payment, and shall include full payment for all Work described in this Section.

Payment shall be made under the following unit:

ITEM	UNIT
Bollard (Type) (Color as appropriate)	Each
Remove Bollard	Each
Remove & Reset Bollard	Each

SECTION 70.14 REMOVE GUARDRAIL

Article 14.1 General

The Work under this Section consists of providing all operations and furnishing all equipment and materials pertaining to the removal and disposal of guardrail designated for removal on the Drawings or as directed by the Engineer.

Article 14.2 Construction

Contractor shall remove the guardrail, bolts, and supporting posts and deliver them to a location as directed by the Engineer. If guardrail and supporting posts are not salvaged, Contractor shall provide a disposal site for the removed guardrail, bolts, and supporting posts in accordance with the provisions of Division 10, Section 10.04, Article 4.9 - Disposal Sites.

Excavation and backfill required in the removal of the guardrail, bolts, and supporting posts is incidental to the bid item. Contractor shall backfill the excavation with native non organic material.

Article 14.3 Measurement

Removal and salvage or disposal of the guardrail, bolts, and supporting posts is measured per linear foot along the face of the guardrail. Delivery of guardrail and associated components to Engineer-designated location or disposal at Contractor furnished disposal site is incidental to the pay item and no additional payment will be made.

Article 14.4 Basis of Payment

Payment for this Work shall be in accordance with Division 10, Section 10.07 - Measurement and Payment, and will include full payment for all Work as described in this Section.

Payment is made under the following unit:

ITEM	UNIT
Remove Guardrail	Linear Foot

SECTION 70.15 GUARDRAIL

Article 15.1 General

The Work under this Section consists of providing all operations pertaining to the construction of guardrails.

Only one type of material shall be used on any one specific guardrail installation, unless otherwise approved by the Engineer.

Article 15.2 Material

A. Steel rail elements shall conform to the requirements of AASHTO M-180, Class B, unless a lighter weight rail is specifically called for on the Drawings or in the Specifications. Terminal sections shall not be less than twelve (12) gauge.

B. The bolts and nuts shall be galvanized steel and shall conform to the requirement of ASTM A-153, Class C and ASTM A-307.

C. Guardrail posts shall be of either wood or steel as specified.

1. Wood posts shall be grade posts and timbers, or better, as rated by the West Coast Lumber Inspection Bureau, and shall be fabricated from one of the following timber species, unless otherwise approved: a) Douglas Fir; b) Western Pine; c) Larch, or; d) Hemlock. The length and cross-section of the posts shall be as shown on the Standard Details unless otherwise noted. Timber posts shall be treated with one of the following preservative treatments: a) Creosote Oil; b) Creosote-coal tar solution; c) Creosote-petroleum solution; d) Pentachlorophenol. Preservative treatments for wood shall conform to the applicable requirements of AASHTO M-133.

2. Steel posts shall be of the section and length as specified or as shown on the Drawings. They shall be of copper bearing steel when so specified. Steel shall conform to the requirements of ASTM A 36 for the grade specified, or, for new railroad rail posts, of ASTM A 1 for the unit weight of rail specified.

   The posts shall be galvanized or shop painted as specified.

Article 15.3 Construction

The construction of guardrails shall be in conformance with the manufacturer's recommendations, the Standard Details, and as directed by the Engineer.

Article 15.4 Measurement

Guardrails will be measured per linear foot along the face of the rail, including end sections.

Article 15.5 Basis of Payment

Payment for this Work shall be in accordance with Division 10, Section 10.07 - Measurement and Payment, and shall include full payment for all Work described in this Section.

Payment shall be made under the following unit:

ITEM	UNIT
Guardrail (Gauge)	Linear Foot

SECTION 70.16 TEMPORARY GROUP MAILBOXES

Article 16.1 General

The Work under this Section consists of performing all operations pertaining to constructing and maintaining a temporary group of mailboxes for the duration of construction.

Article 16.2 Materials

Contractor shall furnish nails, staples, fastening wires, lumber, and all materials required for construction of the mailboxes.

Article 16.3 Construction

The temporary group mailboxes shall be provided by the Contractor prior to pavement removal. Temporary group mailboxes shall conform to current U.S. Postal Service standards.

Article 16.4 Measurement

Temporary group mailboxes shall be measured by lump sum.

Article 16.5 Basis of Payment

Payment for this Work shall be in accordance with Division 10, Section 10.07 - Measurement and Payment, and shall include full payment for all Work described in this Section.

Payment shall be made under the following unit:

ITEM	UNIT
Temporary Group Mailboxes	Lump Sum

SECTION 70.17 RELOCATE MAILBOX

Article 17.1 General

The Work covered under this Section consists of performing all operations pertaining to the removal and resetting of mailbox(es) affected by construction of this project, and shall include providing temporary mailbox(es). The Engineer will designate which mailbox(es) is/are affected.

Article 17.2 Materials

Contractor shall salvage, from the existing mailbox(es), all reusable materials. Contractor shall replace materials that cannot be salvaged or are damaged by Contractor's operations, at Contractor's expense, with new materials, which as nearly as possible duplicate the kind, quality, and capacity of the original installation.

Contractor shall furnish nails, staples, fastening wires or devices, and all materials required for the construction of such anchors, posts, or other portions of the mailbox, which can be replaced more efficiently than they can be moved.

If the property owner elects to replace any of the existing mailbox materials with other materials in better condition, he will be responsible for furnishing and delivering such materials to the site of the Work.

Article 17.3 Construction

Contractor shall provide temporary mailbox placement and access. Contractor shall set the mailbox(es) in reasonably close conformity to its original location with respect to access points or as the Engineer directs. Contractor shall set posts and anchors at the same depth as in the original mailbox(es) or as directed by the Engineer. Contractor shall replace by equivalent construction permanent anchors, posts, or other parts that cannot be economically moved. Contractor shall paint new materials requiring painting. Contractor shall paint the entire mailbox and support if the paint on the new items does not adequately match or does not meet the satisfaction of the Engineer. Contractor shall place the relocated mailbox(es) in at least as good condition as the existing mailbox(es) before it was moved, behind the curb and gutter in accordance with postal regulations, or as the Engineer directs. Contractor shall place the face of the mailbox(es) forty-four to forty-eight inches (44” to 48”) above the top back of the curb, behind the curb and gutter, or in an alternate location approved by the U.S. Post Office.

Article 17.4 Measurement

Relocating mailboxes shall be measured per unit permanently relocated and complete in place. Each unit shall consist of a stand having a single mailbox or a variable number of mailboxes. No payment shall be made for temporary mailbox placement or relocation.

Article 17.5 Basis of Payment

Payment for this Work shall be in accordance with Division 10, Section 10.07 - Measurement and Payment, and shall include full payment for all Work described in this Section.

Payment shall be made under the following unit:

ITEM	UNIT
Relocate Mailbox	Each

SECTION 70.18 CHAIN LINK FENCE

Article 18.1 General

The Work under this Section consists of providing all materials and operations pertaining to construction of chain link fencing.

Article 18.2 Materials

Material used in the construction of chain link fencing shall be in accordance with the Standard Details and the requirements of the "Chain Link Fence Manufacturers Institute," as described below.

A. General

Posts, gate frames, braces, rails, stretcher bars, and truss rods shall be of steel; reinforcing wires shall be of high carbon steel; and gate hinges, post caps, barbed-wire supporting arms, stretcher bar bands, and other parts shall be of steel, malleable iron or equal except that ties and clips may be of aluminum.

Contractor shall form parts accurately to dimensions. All steel and iron parts shall be zinc coated after fabrication, using zinc grade "E" in accordance with Federal Specifications QQ-Z-351.

The weight of the zinc coating per square foot of actual surface shall average not less than 1.2 ounces and no individual specimen shall weigh less than 1.0 ounce. Zinc-coated surfaces shall be free from imperfectly coated spots, bruised or scaled coating, drops of zinc, sharp projections, and sal ammoniac spots.

Posts, gate frames, rails, and braces shall conform to the dimensions and weights shown in the Dimensions and Weights Table in Article 18.3 – Tables.

B. Fabric

Fencing fabric shall be zinc coated by the hot-dip process after fabrication. The zinc coating shall be commercially uniform. It shall not have less than 1.2 ounces per square foot when tested. Fabric gauge shall be as shown in the Fencing Fabric Size Table in Article 18.3 - Tables.

C. Gates

Gates shall be swing or sliding, single or double, as specified, complete with latches, stops, keepers, hinges, or rollers and roller tracks, and, when so specified, with provisions for three (3) strands of barbed wire above the fabric.

Gate frames shall be constructed of tubular members, and shall be constructed in a manner such as to provide a rigid frame and ample strength and shall be free from sag and twist. Where a barbed wire top is specified, the end members of gate frames shall be extended approximately one foot (1') above the top member and

arranged for attaching three (3) uniformly spaced strands of barbed wire and furnished with bands or other suitable method for securely attaching the wire. Fabric shall be attached securely to the gate frame at intervals not to exceed fifteen inches (15”).

Hinges shall be of heavy pattern, of adequate strength for the gate, and with large bearing surfaces for clamping them in position. The hinges shall not twist or turn under the action of the gate. The gates shall be capable of being opened and closed easily by one person.

Latches, stops and keepers shall be provided for all gates. Latches shall have the plunger-bar arranged to engage the gate stop, except that for single gates with openings less than ten feet (10') wide, a forked latch may be provided. Latches shall be arranged for locking. Center stops shall consist of a device arranged to be set in concrete and to engage the plunger of the bar latch of double gates. No stop is required for single gates. Keepers shall consist of a mechanical device for securing the free end of the gate when in the full open position.

D. Posts

Posts shall be of the lengths specified and shall be tubular, except that line posts may be H-beam. Dimension and weight shall conform to the Dimensions and Weights Table in Article 18.3 – Tables, unless otherwise specified.

E. Post Braces

Post braces shall be provided for each gate, corner, pull, and end post for use with fabric five feet (5') or more in height, and shall consist of a round tubular brace extending to each adjacent post at midheight of the fabric, and a truss consisting of a rod not less than three-eighths inch (3/8") in nominal diameter from the adjacent post back to the gate, corner, pull, or end post, with a turnbuckle or other equivalent provision for adjustment.

F. Post Tops

Post tops shall consist of ornamental tops or combination tops and barbed-wire supporting arms, as specified. When so specified or when a top rail is to be provided, the top shall be provided with a hole suitable for the through passage of the top rail. The post tops shall fit over the outside of the posts and shall exclude moisture from the tubular posts.

G. Barbed-Wire Supporting Arms

Barbed-wire supporting arms, when specified to be furnished, shall be at an angle of approximately forty-five degrees (45°) and shall be fitted with clips or other means for attached three lines of barbed-wire. The top outside wire shall be approximately twelve inches (12”) horizontally from the fence line and the other wires spaced uniformly between the top of the fence fabric and the outside barbed wire.

H. Top Rails

Top rails shall be round (tubular), shall be in lengths not less than eighteen feet (18'), and shall be fitted with couplings for connecting the lengths into a continuous run. The coupling shall be not less than six inches (6") long, shall provide a substantial connection, and shall allow for expansion and contraction of the rail. Suitable ties or clips shall be provided in sufficient number for attaching the fabric securely to the top rail at intervals not exceeding two feet (2'). Means shall be provided for attaching the top rail to each gate, corner, pull, and end post.

I. Stretcher Bars

Stretcher bars shall not be less than three-sixteenth inch by three-quarter inch (3/16" x 3/4") and shall be of lengths one inch (1") less than the full height of the fabric with which they are to be used. The stretcher bars shall be arranged for attaching the fabric to all terminal posts by threading through the fabric, by bands, or by other positive mechanical means.

J. Ties or Clips

Ties or clips of adequate strength shall be provided for attaching the fabric to lineposts.

K. Fabric Bands

Fabric bands of adequate strength shall be provided for attaching the fabric and stretcher bars to all terminal posts.

L. Tension Wires

A bottom tension wire shall be provided unless otherwise specified. Top tension wire shall be provided, when so specified, in lieu of a top rail. The tension wires shall be of coiled spring wire not less than seven (7) gage plus or minus 0.005 inch in diameter. Ties or clips shall be provided for attaching each wire to the fabric at intervals not exceeding two feet (2').

M. Barbed Wire

Barbed wire shall consist of two (2) strands of twelve and one-half (12.5) gauge wire with fourteen (14) gauge four (4) point barbs spaced approximately five inches (5") apart. All wire shall be zinc coated with a minimum coating of 0.80 ounces per square foot of surface area on twelve and one-half (12.5) gauge wire.

N. Vinyl Clad Fencing

Those components specified to be vinyl-clad or coated shall have a vinyl covering ten to fourteen (10-14) mils in thickness. Fabric is to be nine (9) gauge wire.

Products are to be Colorbond II as manufactured by Colorguard Corporation, or approved equal.

Article 18.3 Tables

DIMENSIONS AND WEIGHTS

Use and Section		Nominal Outside Diameter/Dimensions (Inches)	Weight per Foot, Nominal (Pounds)
Tubular End, Corner, and Pull Posts for:			
fabric height: 6 feet and less	Round	2.375	3.65
fabric height: over 6 feet	Round	2.875	5.79
Rails and Post Braces	Round	1.66	2.27
Intermediate Posts for:			
fabric height: 6 feet and less			
Tubular	Round	1.90	2.72
C-Section		1.875 x 1.625	2.28
fabric height: over 6 feet			
Tubular	Round	2.375	3.65
C-Section		2.25 x 1.70	2.64
Gate Posts with Fabric Over 6 Feet for Gate Leaf Widths:			
leaf width: 6 feet and less	Round	2.875	4.64
leaf width: over 6 to 13 feet	Round	4.000	8.65
leaf width: over 13 to 18 feet	Round	6.625	18.02
leaf width: over 18 to 24 feet	Round	8.625	27.12
Gate Frame Members for:			
fabric height: Less than 6 feet	Round	1.66	1.83
fabric height: 6 feet and over	Round	1.90	2.28
Interior Bracing:	Round	1.66	1.83

FENCING FABRIC SIZE

Recommended Usage	Height of Fabric	Mesh Size	Gauge	Nominal Diameter Coated Wire (Inches)
Heavy Industrial	36” through 144”	2”	6	0.192
Industrial/Residential	36” through 144”	2”	9	0.148
Light Industrial/Residential	36” through 84”	2”	11	0.120
Tennis Court	120” through 144”	1-3/4”	11	0.120

Article 18.4 Construction

A. Grading

All trees, brush and other obstacles which would interfere with the construction of the fence shall be removed and disposed of at a Contractor-provided disposal area and shall be considered incidental to the Contract. The fence shall follow a smooth profile. Throughout the fence length the distance between the ground surface and the bottom tension wire shall not be greater than four inches (4"), nor less than two inches (2"). Where excavation is necessary to meet this requirement, the ground will be graded level not less than one foot (1') on either side of the fence and backslopes of one and one-half to one (1½:1) provided. Where backfill is necessary to meet this requirement, natural surface vegetation will be removed prior to placing fill material. The top of the fill shall be level for one foot (1') on either side of the fence line and the shoulder slopes shall be one-half foot to one foot gradient (½‘:1’). Grading for all specific conditions shall be such that water will not be allowed to pond in the immediate area of the fence. Where drainage is required across the fence line, the Engineer shall be consulted and channels provided in accordance with his decision.

B. Posts

All posts shall be set in Class B Portland Cement Concrete footings. The tops of the footings shall be level with the ground, shall be crowned to provide drainage and shall be troweled smooth. The dimensions of the footings shall be as shown on the Drawings. The footings shall be allowed to cure for a period of at least seven (7) days before attaching fabric.

The Contractor shall set the posts vertical and of uniform and equal height above the ground with a maximum horizontal spacing of ten feet (10') center. On straight runs, pull posts shall be provided at intervals not to exceed five hundred (500) lineal feet. Changes in line of thirty degrees (30°) or more shall be considered corner posts. Steep slopes and abrupt changes in topography may require changes in various elements of the fence. The chain link fabric shall be stretched taut and securely fastened to end, corner, or gate posts. The top edge of the fabric shall be

fastened to the top rail, and the lower edge of the fabric shall be fastened to the bottom tension wire.

C. Fabric

Place fabric on the side specified, stretched taut, and securely fastened to the posts. Fasten fabric to end, gate, corner and pull posts with stretcher bars and fabric bands spaced at intervals of fifteen inches (15") or less. Fastening to line posts shall be with ties or clips at fifteen inch (15") intervals.

Join rolls of wire fabric by weaving a single strand into the ends of the rolls to form a continuous mesh. Horizontal splices are not permitted.

D. Top Rail

Top rails shall pass through the ornamental tops of the line posts, forming a continuous brace from end to end of each stretch of fence. Join lengths of tubular top rail by sleeve couplings. Secure top rails fastened to terminal posts by pressed steel fittings or other appropriate means.

E. Tension Wire

Provide one continuous length of tension wire between pull posts. Apply sufficient tension to avoid excess sag between the posts. Tie or otherwise fasten tension wires to end, gate, corner, or pull posts by methods approved by the Engineer.

F. General Appearance

Runs of fence shall present the same general appearance and the product of one manufacturer only will be accepted, except for items which do not influence the appearance of the completed fence. No used, rerolled, or open-seam steel will be permitted in posts, gate frames, rails or braces.

Article 18.5 Measurement

Chain link fencing will be measured per linear foot, in place, from outside to outside of end or corner posts, except for the space occupied by gates.

Gates will be measured per each, complete in place for a particular size.

Article 18.6 Basis of Payment

Payment for this Work shall be in accordance with Division 10, Section 10.07 - Measurement and Payment, and shall include full payment for all Work described in this Section.

Unit cost payment shall be made on the following basis:

ITEM	UNIT
Chain Link Fence (Include Heights and Gage)	Linear Foot
Gate (Type and Size)	Each

SECTION 70.19 SILT FENCE

Article 19.1 General

The Work under this Section consists of providing all operations pertaining to construction of temporary silt fence as shown on the Drawings and specified in this Section.

Article 19.2 Materials

Materials for silt fence shall be specified on the Drawings. Silt fence filtration fabric material shall meet the minimum requirements of the Temporary Silt Fence Property Requirements found in Table 7 of AASHTO M288-06.

Article 19.3 Construction

Fence described in this Section shall be installed in accordance with the Drawings, or to the satisfaction of the Engineer. Silt fencing shall remain in place and in good working condition until Work is complete under the Contract. The continued maintenance of silt fence and replacement of damaged items shall be the ongoing responsibility of the Contractor. Additional metal "T" poles shall be installed in areas where additional structural support is required. All silt fences shall be removed upon final acceptance of the Project or as directed by the Engineer.

Article 19.4 Measurement

Silt fence described in this Section will be measured per linear foot, complete and in place.

Article 19.5 Basis of Payment

Payment for this Work shall be in accordance with Division 10, Section 10.07 - Measurement and Payment, and shall include full payment for all Work described in this Section.

Payment shall be made under the following units:

ITEM	UNIT
Silt Fence	Linear Foot

SECTION 70.20 SOIL STABILIZATION

Article 20.1 General

The Work under this Section consists of providing all operations pertaining to placing and maintaining Soil Stabilization Matting material according to the Drawings or specified herein.

Article 20.2 Material

A. Jute Mesh

Jute Mesh shall be cloth of a uniform, open, plain weave of undyed and unbleached single jute yarn. The yarn shall be of a loosely twisted construction and it shall not vary in thickness more than one-half its normal diameter. Jute mesh shall be furnished in rolled strips and shall meet the requirements as follows:

1. Width - forty-eight inches, plus or minus one inch (48" ±1").

2. Seventy-eight (78) warp-end per width of cloth (minimum).

3. Forty-one (41) weft-ends per yard (minimum).

4. Weight to average 1.22 pounds per linear yard with a tolerance of plus or minus five percent (±5%).

Staples shall be U-shaped and shall be approximately six inches (6") long and one inch (1") wide. Machine-made staples may be of No. 11 gauge or heavier steel wire. Hand-made staples shall be made from No. 9 gauge or heavier steel wire.

B. Glass Fiber

Glass Fiber material shall consist of glass processed from the molten state into fibrous form. A multitude of continuous glass fibers (approximately sixty [60] ends) shall be collected together and wound into a package of cylindrical shape. The glass fibers shall be lightly bound together in a ribbon without the use of clay, starch or like deleterious substances and not more than three-quarters of a percent (0.75%) of saponifiable acids. The fibers shall be of a consistency suitable for application by compressed air and shall contain no petroleum solvents or other agents known to be toxic to plant or animal life.

C. Nylon Matting

Nylon matting shall be made from Nylon 6, with a minimum content of five-tenths of a percent (0.5%) by weight of carbon black, monofilaments fused at their intersections to form a bulky mat of open construction. Nylon matting shall be furnished in rolled strips a minimum of thirty-eight inches (38") wide.

Staples shall be a minimum of ten inches (10”) in length and shall be T-staples, U-staples, or wood stakes. Metal staples shall be 8- to 11-gauge steel.

D. Excelsior Blankets

Excelsior blankets shall consist of a machine produced mat of curled wood excelsior of eighty percent (80%) six-inch (6”) or longer fiber length, with consistent thickness and the fiber evenly distributed over the entire area of the blanket. The top side of each blanket shall be covered with a photodegradable extruded plastic mesh. The blanket shall be made smolder resistant without the use of chemical additives. Excelsior blankets shall be furnished in rolled strips and shall meet the requirements as follows:

1. Width – forty-eight inches, plus or minus one inch (48” ±1”)

2. Length - one hundred and eighty feet (180’) average

3. Weight Per Roll – seventy-eight (78) pounds, plus or minus ten percent (±10%)

Staples shall be made of wire 0.091 inches in diameter or greater, "U" shaped. Size and gauge will vary with soil conditions.

E. Erosion Control Blankets

Erosion control blanket shall be a machine-produced mat consisting of seventy percent (70%) agricultural straw and thirty percent (30%) coconut fiber. The blanket shall be of consistent thickness with the straw and coconut fiber evenly distributed over the entire area of the mat. The blanket shall be covered on the top side with UV stabilized polypropylene netting having an approximate five-eighths by five-eighths inch (5/8" x 5/8”) mesh, and on the bottom with a polypropylene netting with an approximate one-half by one-half (1/2” x 1/2”) mesh. The blanket shall be sewn together one and one-half inches (1.5”) on centers with biodegradable thread. The straw/coconut fiber erosion control blanket shall be SC150 as manufactured by North American Green, or Owner-approved equivalent. The straw/coconut fiber erosion control blanket shall have the following properties:

	Material Content
Straw	70% (0.35 lb./yd.^{2})
Coconut Fiber	30% (0.15 lb./yd.^{2})
Netting	Top side heavyweight UV stabilized (3 lb./1,000 ft.^{2} approximate weight). Bottom side lightweight photodegradable (1.64 lb./1,000 ft.^{2} approximate weight).
Stitch	Degradable

Physical Specifications (Roll)

Width	6.5 feet
Length	83.5 feet
Weight	30 lbs. +/- 10%
Area	60 $yd.^2$
Stitch Spacing	1.5 inch

F. Coir Fiber Roll

Coir (coconut) fiber rolls shall consist of long rolls of the specified diameter of coconut fiber encased in coconut fiber netting.

Fiber shall be one hundred percent (100%) mattress grade coconut fiber, six pounds per cubic foot.

Netting shall be one hundred percent (100%) coconut (coir) two-inch (2") mesh. Yarn tensile strength shall be fifty-five (55) pounds dry, forty (40) pounds wet.

Coir fiber rolls shall be BonTerra BioLogs, or an approved equal, manufactured by:

BonTerra America
355 West Chestnut Street
Genesee, ID 83842
Phone: (800) 882-9489
E-mail: bonterra@moscow.com.

Article 20.3 Construction

This Work shall be accomplished within forty-eight (48) hours after finish grading of the subgrade or topsoil has been completed.

The rates of application shall be as shown on the Drawings.

Matting material shall not be applied on days when the wind or rain would cause undue erosion or displacement of the material. The soil shall not be disturbed more than necessary. Use of vehicles and tracked equipment will be permitted by the Engineer only if such use does not cause rutting and displacement of the subgrade or topsoil.

Article 20.4 Surface Requirements

The surface shall be smoothed and all gullies and potholes backfilled prior to applying the matting. Contractor shall remove all rocks or clods larger than two inches (2") in size and all sticks and other foreign material which will prevent contact of the matting and surface. If the surface of the subgrade or topsoil is extremely dry, watering may be required by the Engineer prior to placement of the matting. Such watering will be incidental to the Work.

In some instances it may be appropriate to track-walk the prepared surface prior to seeding and stabilization. Contractor shall provide track-walking only if directed by the Drawings or the Engineer.

Article 20.5 Application

Contractor shall install each product in accordance with the manufacturer's directions.

A. Jute Mesh

If seeding is specified, the jute matting shall be spread within twenty-four (24) hours after the seed has been placed.

Check slots shall be installed as detailed on the Drawings and shall consist of separate full-width four foot (4') strips of jute mesh placed at right angles to the direction of water flow immediately prior to placing the general covering of jute mesh. Check slots shall be made by burying a tight fold of jute mesh vertically in the soil and tamping and stapling in place.

Check slots shall be spaced so that one check slot, junction slot, or anchor slot of the jute mesh occurs every seventy-five feet (75') on gradients of less than four percent (4%) and every fifty feet (50') on gradients greater than or equal to four percent (4%). On slope drains, a check slot or an end slot shall occur every twenty-five feet (25').

Edges of matting shall be buried around the edges of catch basins and other structures as herein described. Matting must be spread evenly and smoothly and in contact with the soil at all points.

Jute matting shall be held in place by approved wire staples, pins, spikes, or wooden stakes driven vertically into the soil. Matting shall be fastened at intervals not more than three feet (3') apart in three (3) rows for each strip of matting with one (1) row along each edge and one (1) row alternately spaced in the middle. All ends of the matting and check slots shall be fastened at six inch (6") intervals across their width.

B. Glass Fiber Matting

Glass fiber matting shall be of such consistency that it can be applied by use of a blower. Other equipment capable of spreading the continuous glass fiber strands uniformly may be used if approved by the Engineer. Equipment which cuts or breaks the glass fibers shall not be permitted.

The matting shall be spread uniformly at the locations shown on the Drawings and shall be loose enough to allow sunlight to penetrate and air to circulate, but dense enough to shade the ground, reduce rate of water evaporation, and prevent or reduce water or wind erosion.

Glass fiber matting shall be held in place by the application of a CRS-1 asphalt emulsion applied at the rate shown on the Drawings. A hand-operated boom from a spreader may be used to spray the emulsion evenly over the mulch material.

All glass fibers shall be placed and tacked with emulsion in the specified areas within twenty-four (24) hours after seeding, or as directed by the Engineer.

CRS-1 Cathionic emulsion will not be measured or paid separately and is considered incidental to glass fiber matting.

C. Nylon Matting

Matting shall be installed peaked side down. Adjacent strips are to be overlapped two to three inches (2" to 3") and ground fastened at three to five foot (3' to 5') intervals. The entire perimeter of the matting shall be ground fastened in twelve inch (12") deep trenches at three to five foot (3' to 5') intervals and covered with soil.

If seeding is specified, the seeding shall be accomplished within twenty-four (24) hours after placing the nylon matting.

D. Excelsior Blankets

Excelsior blankets shall be unrolled with the netting on top and the fibers in contact with the soils over the entire area. In ditches, the blankets shall be applied in the direction of flow, butted at ends and sides. On slopes, the blankets shall be applied either horizontally or vertically to the slope; ends and sides shall be butted. Staples shall be spaced approximately two linear yards apart, on each side, and one row in the center alternately spaced between each side. Use a common row of staples on adjoining blankets.

If seeding is specified, the excelsior blankets shall be placed within twenty-four (24) hours after the seed has been placed.

E. Erosion Control Blankets

Erosion control blankets shall be spread uniformly at the locations described on the Drawings and shall be loose enough to allow sunlight to penetrate and air to circulate, but dense enough to shade the ground, reduce rate of water evaporation, and prevent or reduce water or wind erosion.

Erosion control blankets shall be unrolled with the netting on top and the fibers in contact with the soils over the entire area. On slopes, the blankets shall be applied vertical to the slope; ends and sides shall be butted. Staples shall be spaced approximately two linear yards apart, on each side, and one row in the center alternately spaced between each side. Use a common row of staples on adjoining blankets.

F. Coir Fiber Roll

The Contractor shall minimize Work site disturbance. The Contractor shall protect existing plants and avoid additional disturbance that can lead to erosion and sedimentation. The Contractor shall prepare the site for installation of the coir fiber roll by removing any large rocks, obstructions, or material that may prevent the coir from making direct and firm contact with the soil.

The Contractor shall install coir rolls level along a horizontal contour. Contractor shall place coir rolls approximately parallel to shoreline. The Contractor shall install coir roll such that approximately one-third (1/3) of its height extends above the mean water elevation.

The Contractor shall select and use wooden stakes made from strong, durable wood species that do not have knots or flaws. The stakes shall be pointed at one end, not wedge shaped. Stakes for coir rolls shall be approximately one and one half by one and one-half inches (1.5" x 1.5"), unless otherwise specified. Stake length shall be specified on the Drawings.

Place live willow stakes in the coir fiber roll by pulling the roll's fibers apart. If necessary, wedge a pilot bar back and forth to create a hole for the willow stake. Drive or place the willow stake to the base of the coir roll. If driven, Contractor shall ensure that willow stake is not damaged.

Article 20.6 Maintenance and Repair

The Contractor shall maintain the areas covered by matting until all Work on the Project has been completed and accepted. Prior to acceptance of the Work, the damaged areas shall be reshaped, reseeded, and the matting satisfactorily repaired or replaced as herein specified with no additional compensation.

Article 20.7 Measurement

The quantity of Soil Stabilization Matting to be paid for shall be the number of units of one thousand (1,000) square feet, measured to the nearest one-tenth (0.1) unit on the slope of the ground surface.

Method of measurement shall be by length per linear foot of Coil Fiber Roll of the specified diameter complete and accepted in its final position. The bid item shall include all furnishing and placing coir fiber roll, willow stakes, wood stakes, fiber netting, and all other materials necessary to complete the Work described in this Section

Article 20.8 Basis of Payment

Payment for this Work shall be in accordance with Division 10, Section 10.07 - Measurement and Payment, and shall include full payment for all Work described in this Section.

Unit cost payment shall be made on the following basis:

ITEM	UNIT
Soil Stabilization Matting (Type)	1,000 Square Feet
Coir Fiber Roll (Diameter) with Willow Stake	Linear Foot

SECTION 70.21 FLEXIBLE DELINEATORS

Article 21.1 General

The Work covered under this Section consists of providing all labor, materials, equipment, and transportation required for complete installation of Flexible Delineators.

Article 21.2 Submittals

Contractor shall submit three copies of manufacturer's product data for approval by the Engineer.

Article 21.3 Materials

The Flexible Delineators shall be made of composite material certified to withstand multiple vehicle impacts at high speeds, perform within the temperature extremes of the project location, be resistant to UV light and vandalism. The Delineator shall consist of a corrosion-resistant drivable ground anchor and replaceable tubular composite post, orange color, with reflective sheeting for nighttime visibility. Minimum outside diameter of the post shall be 2", minimum height 60".

The Delineator shall be a Carsonite Composites, Newberry, South Carolina, Model Utility Sentry CIP2 – round, or approved equal. To be considered equal, Delineators must be flexible, replaceable, and have the specified physical properties, dimensions, and color.

Article 21.4 Construction

Contractor shall install Delineators in accordance with the manufacturer's recommendations. Where anchors are embedded in concrete, the Contractor shall install the anchor so that the top of the anchor is flush with the concrete surface.

Article 21.5 Measurement

Delineators shall be measured as complete installations including the drivable ground anchor, replaceable composite post, and all labor required for the installation.

Article 21.6 Basis of Payment

Payment for this Work shall be in accordance with Division 10, Section 10.07 - Measurement and Payment, and shall include full payment for all Work described in this Section.

Payment shall be made under the following unit:

ITEM	UNIT
Furnish and Install Flexible Delineator	Each

MUNICIPALITY OF ANCHORAGE
STANDARD SPECIFICATIONS

DIVISION 70
MISCELLANEOUS
STANDARD DETAILS

STANDARD CONSTRUCTION SPECIFICATIONS
MISCELLANEOUS
DIVISION 70
INDEX OF STANDARD DETAILS

70-1	Standard Location for New Utilities
70-2	Locations for Existing Utilities (Approval Required for New Utilities)
70-3	Typical Water and Sewer Locations
70-4	Adjustment for Gas Valve Key Box (1/4” thru 4”)
70-5	Adjustment for Gas Valve Manhole
70-6	Standard Method for Shoring Phone/Conduit ACS Approved Method and Procedure #86-1
70-7	Striping Notes
70-8	Intersection Approach Striping
70-9	Left-Turn Pocket Approach Striping
70-10	Raised Median Approach and Two Lanes Drive to Right Striping
70-11	Left-Turn Pocket Approach from Two Way Center Left-Turn Lane Striping
70-12	Two Way Center Left Turn Lane Striping
70-13	Passing on Both Sides of an Obstruction
70-14	Layout Templates for Stencils
70-15	Approach to Railroad Crossing on Two Lane Two Way Highway
70-16	Typical Uncurbed Return with Pathway
70-17	Typical Uncurbed Return without Pathway
70-18	Typical Curb Return with Sidewalk
70-19	Typical Curb Return without Sidewalk
70-20	Post Mounted Sign with Shoulder
70-21	Post Mounted Sign with No Shoulder
70-22	Post Mounted Sign with Guardrail
70-23	Post Mounted Sign Curb without Sidewalk
70-24	Post Mounted Sign Curb with Parkway and Sidewalk
70-25	Post Mounted Sign Curb with Sidewalk without Parkway
70-26	Post Mounted Sign Raised Medians
70-27	Post Mounted Sign Secondary Panel Height and Sign Positioning
70-28	Street Name Signs
70-29	Sign on Round Post
70-30	Street Name on Round Post
70-31	Concrete Foundation for Sign Post

70-32	12” Plate Installation Detail with Supplemental 8” D3-D1 Signs
70-33	Signal Pole Mast Arm Sign Mounting
70-34	Wood Bollard
70-35	Removable Wood Bollard
70-36	Removable Steel Rectangular Bollard
70-37	Steel Bollard
70-38.1	Removable Circular Bollard (Sheet 1 of 2)
70-38.2	Removable Circular Bollard (Sheet 2 of 2)
70-39	Guard Rail Detail
70-40	Cluster Mailbox Location
70-41	Fence Details
70-42	Fence Details

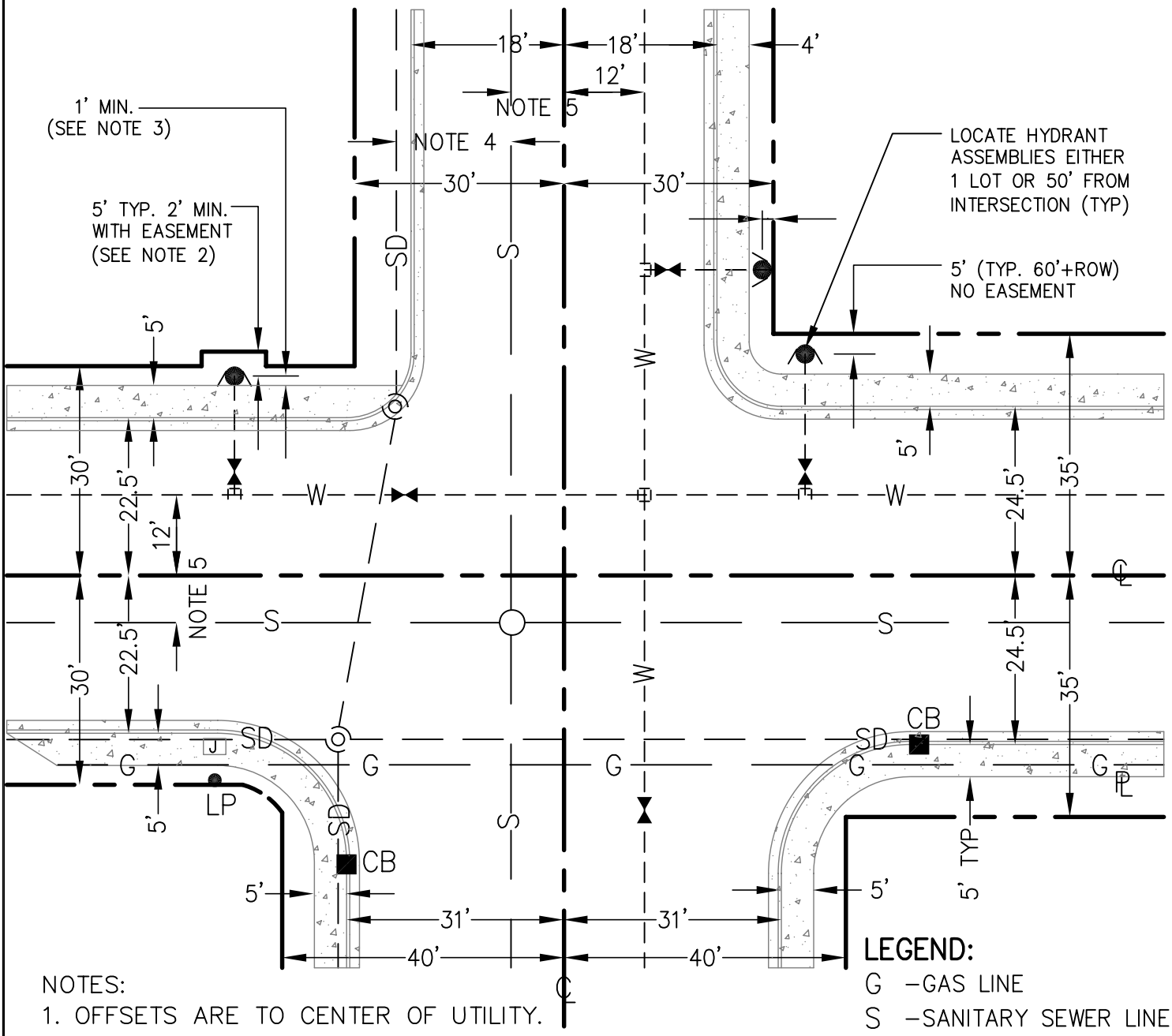

NOTES:

1. OFFSETS ARE TO CENTER OF UTILITY.
2. ADDITIONAL RIGHT-OF-WAY/EASEMENT MAY BE REQUIRED TO MEET MINIMUM SET-BACKS FOR HYDRANTS.
3. SET HYDRANT A MINIMUM OF 5' FROM BACK OF CURB OR 1' FROM EDGE OF SIDEWALK.
4. MAINTAIN SEPARATION DISTANCES AS IDENTIFIED IN THE AWWU DESIGN AND CONSTRUCTION PRACTICES MANUAL, ADEC 18 AAC 72, AND 18 AAC 80.
5. LOCATE SANITARY SEWER BETWEEN 5' AND 6' FROM CENTERLINE. MANHOLE LIDS SHALL BE LOCATED IN THE CENTER OF A TRAVEL LANE. IF THERE IS A TWO-WAY CENTER TURN LANE, THE MANHOLE LIDS SHALL BE PLACED APPROXIMATELY ON THE LINE BETWEEN LANES.
6. ADA REQUIREMENTS SHALL GOVERN WHEN PLACING STORM DRAIN MANHOLE LIDS AND CATCH BASINS IN PEDESTRIAN FACILITIES.

LEGEND:

G –GAS LINE
S –SANITARY SEWER LINE
SD –STORM DRAIN LINE
W –WATER LINE
℄ –R.O.W. CENTERLINE

MUNICIPALITY OF ANCHORAGE	SCALE: NTS APPROVED: REVISED: 8/08	**STANDARD LOCATION FOR NEW UTILITIES**	SECTION # DIV 50, 55, 60 & 70 DETAIL # 70-1

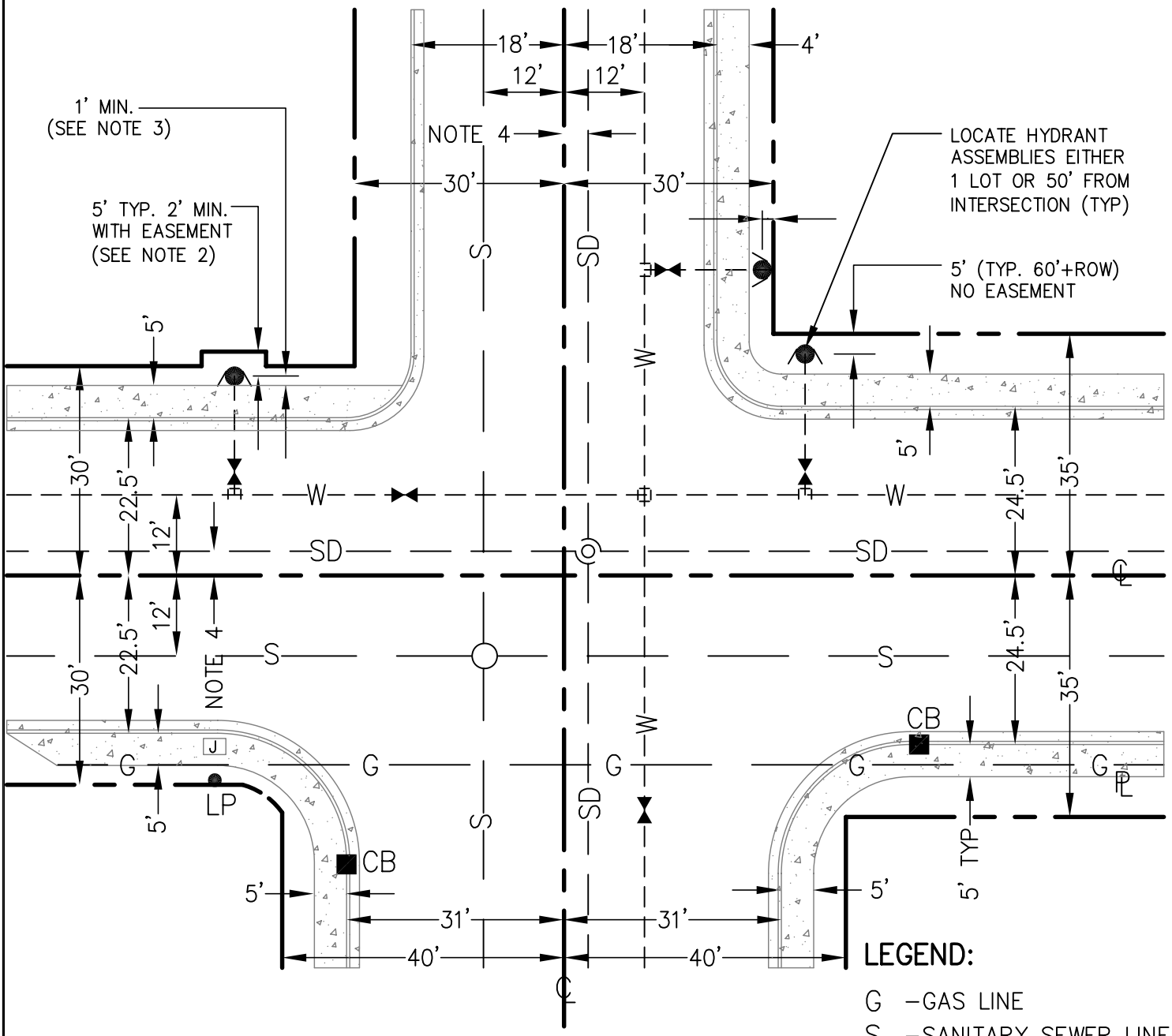

LEGEND:

G –GAS LINE
S –SANITARY SEWER LINE
SD –STORM DRAIN LINE
W –WATER LINE
℄ –R.O.W. CENTERLINE

NOTES:

1. OFFSETS ARE TO CENTER OF UTILITY.
2. ADDITIONAL RIGHT–OF–WAY MAY BE REQUIRED TO MEET MINIMUM SET–BACKS FOR HYDRANTS.
3. SET HYDRANT A MINIMUM OF 5' FROM BACK OF CURB OR 1' FROM EDGE OF SIDEWALK.
4. LOCATE UTILITIES TO MAINTAIN MINIMUM SEPARATIONS AS IDENTIFIED IN THE AWWU DESIGN AND CONSTRUCTION PRACTICES MANUAL, ADEC 18 AAC 72, AND 18 AAC 80.

MUNICIPALITY OF ANCHORAGE	SCALE: NTS APPROVED: REVISED: 8/08	**LOCATION FOR EXISTING UTILITIES (APPROVAL REQUIRED FOR NEW UTILITIES)**	SECTION # DIV 50, 55, 60 & 70 DETAIL # 70–2

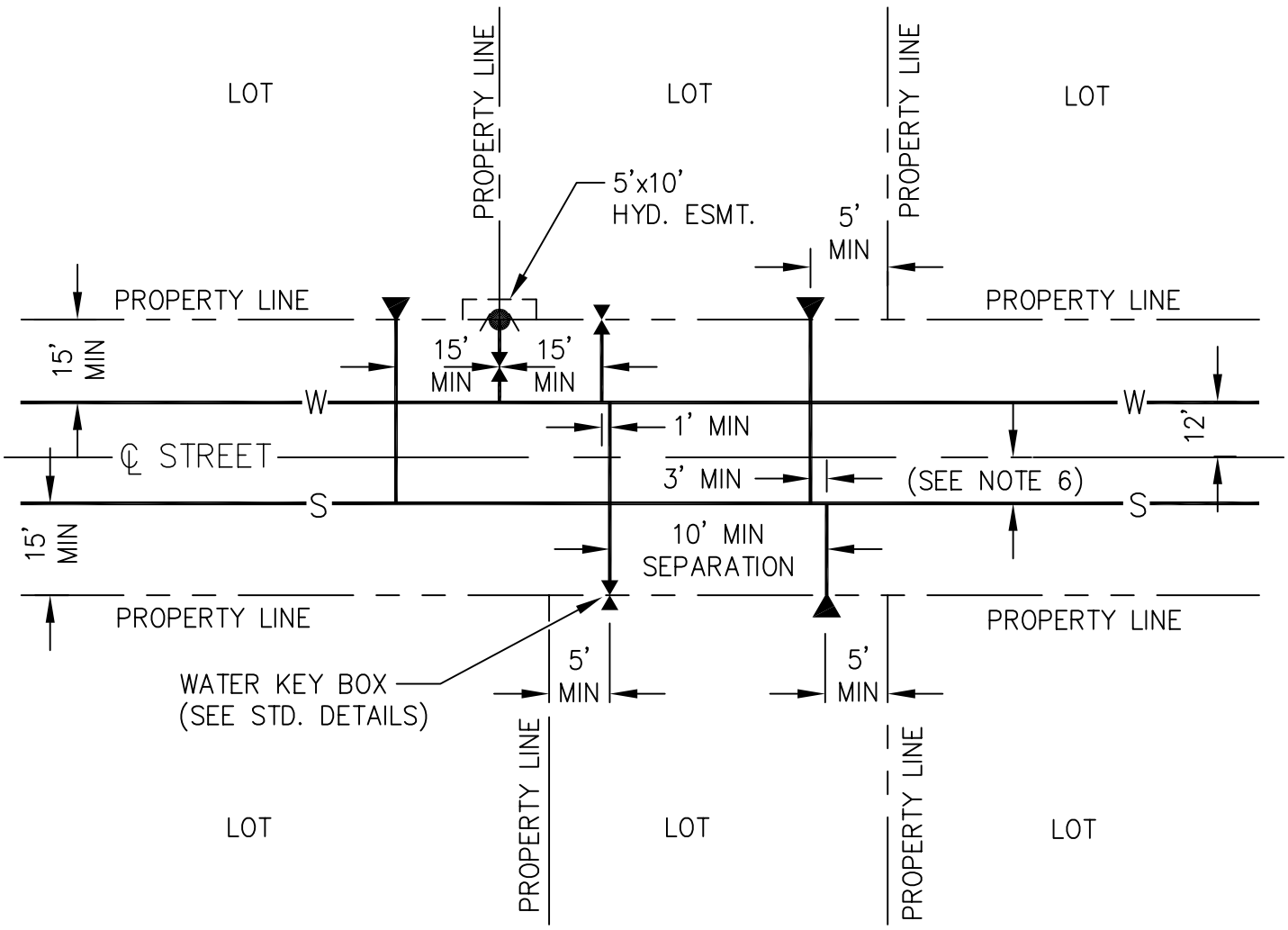

NOTES:

1. SANITARY SEWER SERVICE CONNECTIONS SHALL BE FIVE TO FIFTEEN FEET (5' TO 15') FROM PROPERTY CORNER, IN LOWER ONE–THIRD OF THE LOT TO BE SERVED.
2. WATER SERVICE CONNECTIONS SHALL BE A MINIMUM OF FIVE FEET (5') FROM PROPERTY CORNER OF THE LOT TO BE SERVED.
3. WATER AND SEWER SERVICES SHALL MAINTAIN A MINIMUM TEN FOOT (10') SEPARATION.
4. WATER AND SEWER SERVICES SHALL MAINTAIN A MINIMUM FIFTEEN FOOT (15') SEPARATION FROM FIRE HYDRANTS.
5. LOCATE WATER AND SANITARY SEWER SERVICE TO MAINTAIN A MINIMUM TEN FOOT (10') SEPARATION BETWEEN OUTSIDE OF PIPE AND STORM SEWER, CATCH BASINS, MANHOLES STREET LIGHTING, UTILITY POLES, UTILITY PEDESTALS, METER BASES AND TRANSFORMER PADS.
6. FOR STANDARD LOCATION AND SEPARATION FOR SANITARY SEWER, SEE NOTE 5 ON STANDARD DETAIL 70–1.

MUNICIPALITY OF ANCHORAGE	SCALE: NTS APPROVED: REVISED: 10/08	**TYPICAL WATER AND SEWER SERVICE LOCATIONS**	SECTION # DIV 50, 55, 60 & 70 DETAIL # 70–3

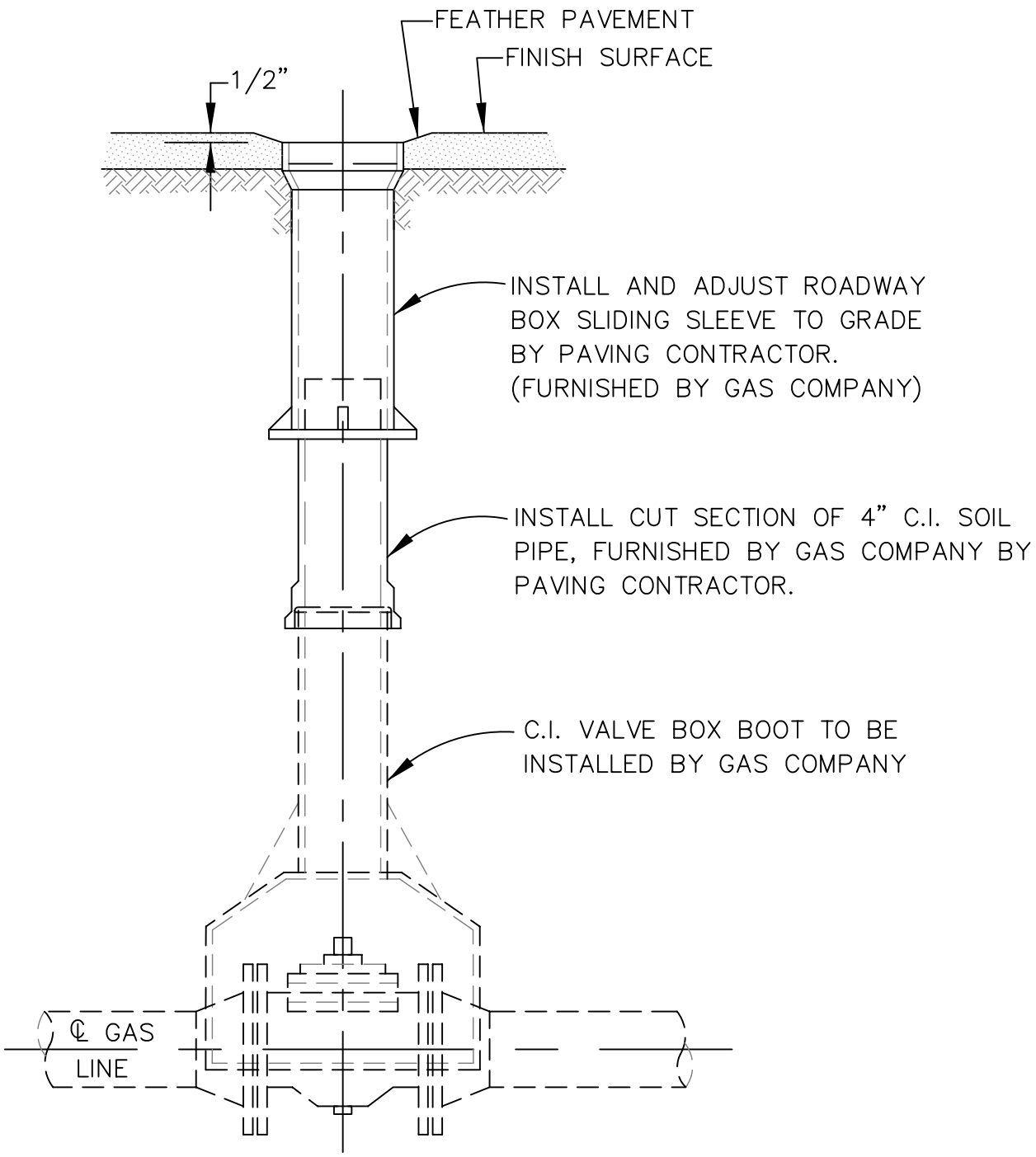

MUNICIPALITY OF ANCHORAGE	SCALE: NTS APPROVED: REVISED: 10/08	**ADJUSTMENT FOR GAS VALVE KEY BOX (1/4" thru 4")**	SECTION # 70.02 DETAIL # 70–4

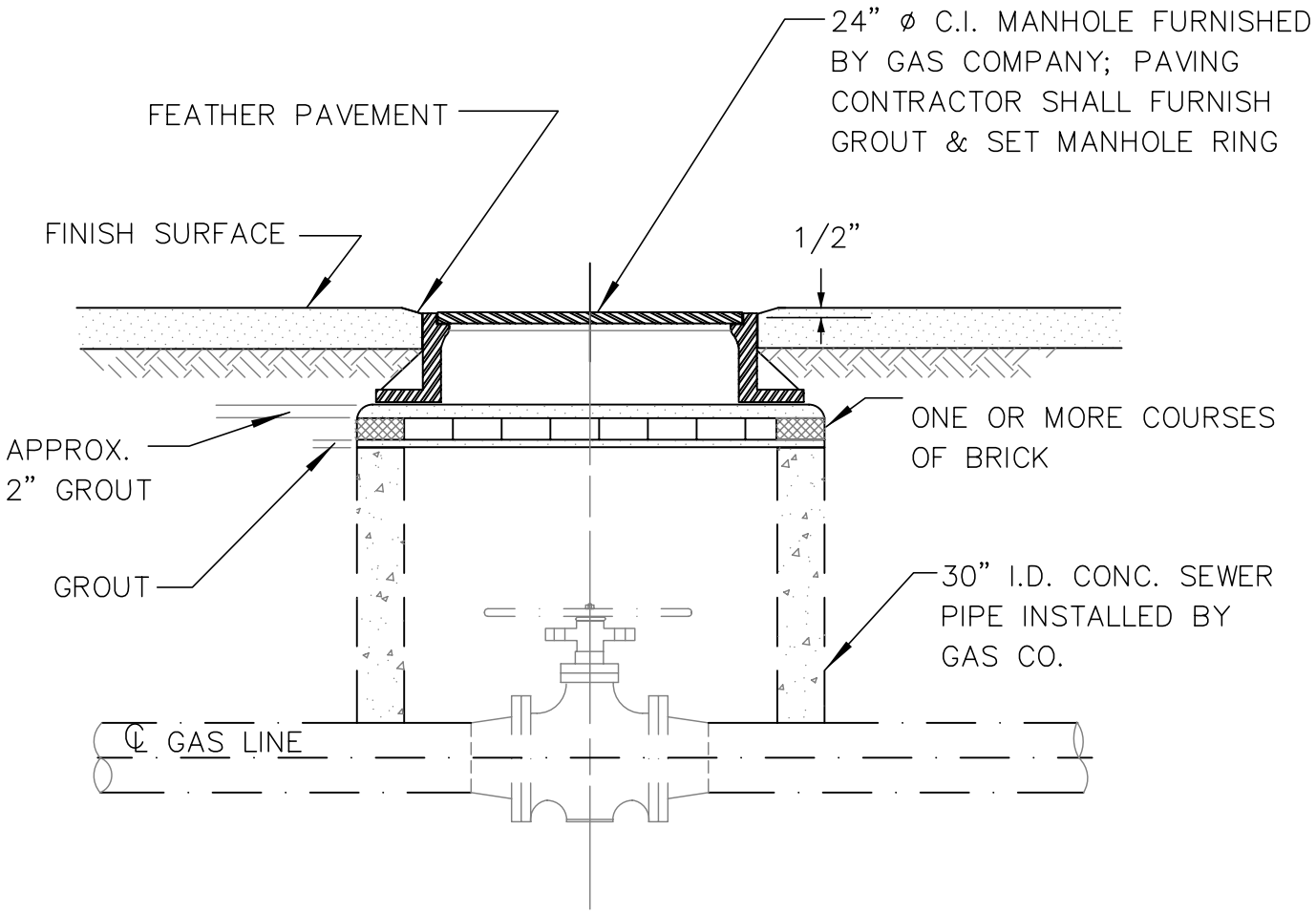

MUNICIPALITY OF ANCHORAGE	SCALE: NTS APPROVED: REVISED: 10/08	**ADJUSTMENT FOR GAS VALVE MANHOLE**	SECTION # 70.03 DETAIL # 70–5

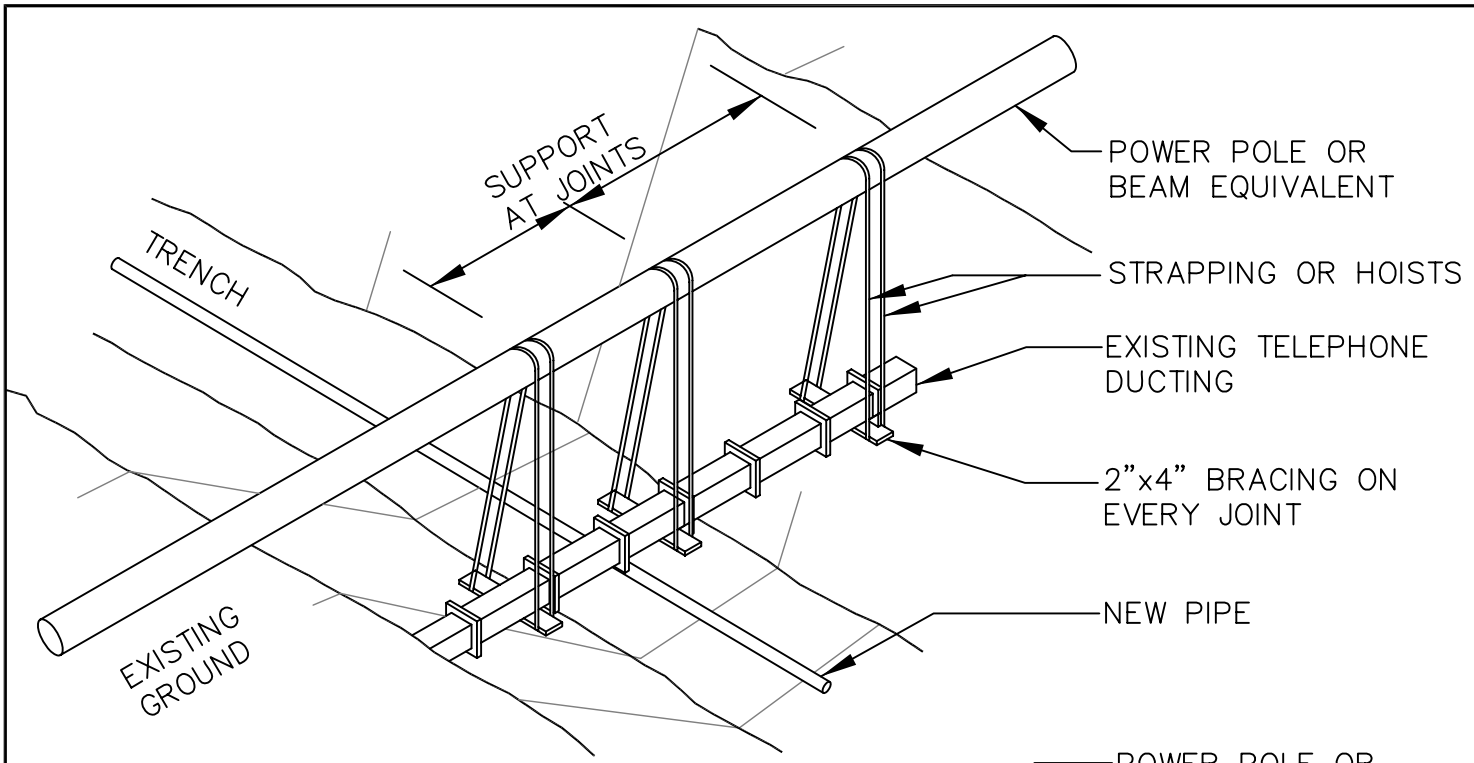

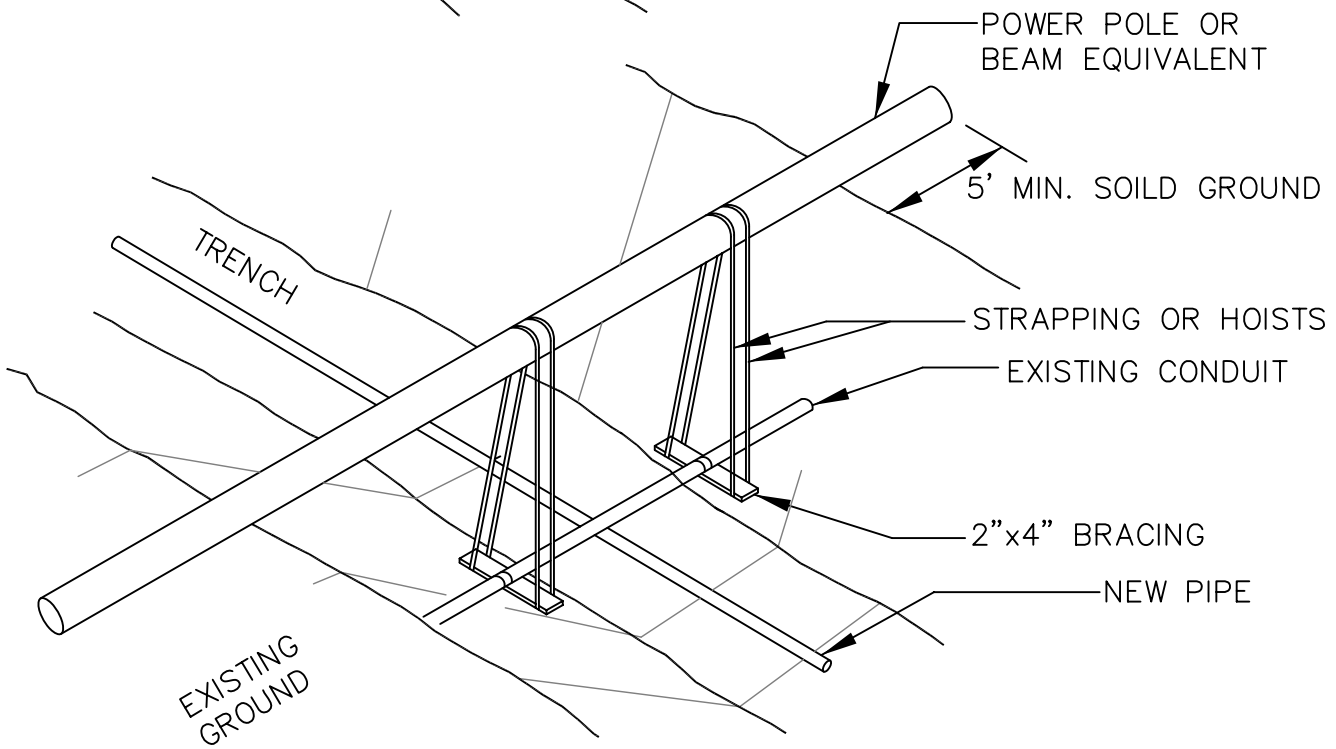

NOTES:

1. SUPPORT DUCTS WITH 2"x4" AND STRAPS AT JOINTS BEFORE EXCAVATING UNDER DUCTS.
2. PLACE AND COMPACT CLASSIFIED MATERIAL UNDER DUCT BANK UP TO WITHIN 18" OF DUCT. THE LAST 18" TO BE CONCRETE OR CONCRETE SLURRY.
3. DUCTS TO BE ENCASED IN 3" OF SAND (ON ALL SIDES).

MUNICIPALITY OF ANCHORAGE	SCALE: NTS APPROVED: REVISED: 10/08	**STANDARD METHOD FOR SHORING (SUPPORTING) PHONE/CONDUIT A.C.S APPROVED METHOD AND PROCEDURES #86-1**	SECTION # 70.04 DETAIL # 70–6

GENERAL NOTES:

1. ALL ONLYS, ARROWS, CROSSWALKS, STOP BARS AND OTHER MARKINGS SHALL BE AS INDICATED IN THE DRAWINGS AND SPECIFICATIONS.
2. DUAL–TURN LANE, TURN POCKET REVERSAL AND CENTERLINE DOUBLE LINES SHALL BE TWO 4" YELLOW LINES SEPARATED BY A 4" SPACE.
3. REGULAR LANE LINES SHALL BE A WHITE 4" WIDE LINE. SKIP LINE SPACING SHALL BE A 10' LINE AND A 30' SPACE.
4. MEDIAN NOSE AND THE TOP AND FACE OF CURB OF ALL MEDIAN ISLAND NOSING SHALL BE YELLOW A MINIMUM OF 5' BACK FROM THE FLOWLINE.
5. "W" IS THE WIDTH OF THE LANE MEASURED FROM CENTER LANE LINE TO CENTER LANE LINE OR FROM CENTER LANE LINE TO EDGE OF PAVEMENT.
6. "L" IS TAPER LENGTH. "L" IS DETERMINED BY TAKING THE SPEED LIMIT (M.P.H.) TIMES THE OFFSET WIDTH IN FEET OR AS INDICATED ON DRAWINGS. MINIMUM "L" IS 100'.
7. "D" IS THE LANE REVERSAL DISTANCE. A RATIO OF 8:1 FOR THE ENTRANCE TAPER IS DESIRABLE WITH A MINIMUM RATIO OF 3:1.
8. "S" IS THE SHY DISTANCE MEASURED FROM THE FACE OF CURB TO THE CENTER OF THE OUTSIDE YELLOW LINE. "S" IS 18" OR AS SHOWN ON THE DRAWINGS.
9. THESE NOTES APPLY TO STANDARD DETAILS 70–8 THROUGH 70–15.

MUNICIPALITY OF ANCHORAGE	SCALE: NTS APPROVED: REVISED: 10/08	**STRIPING NOTES**	SECTION # 70.10 DETAIL # 70–7

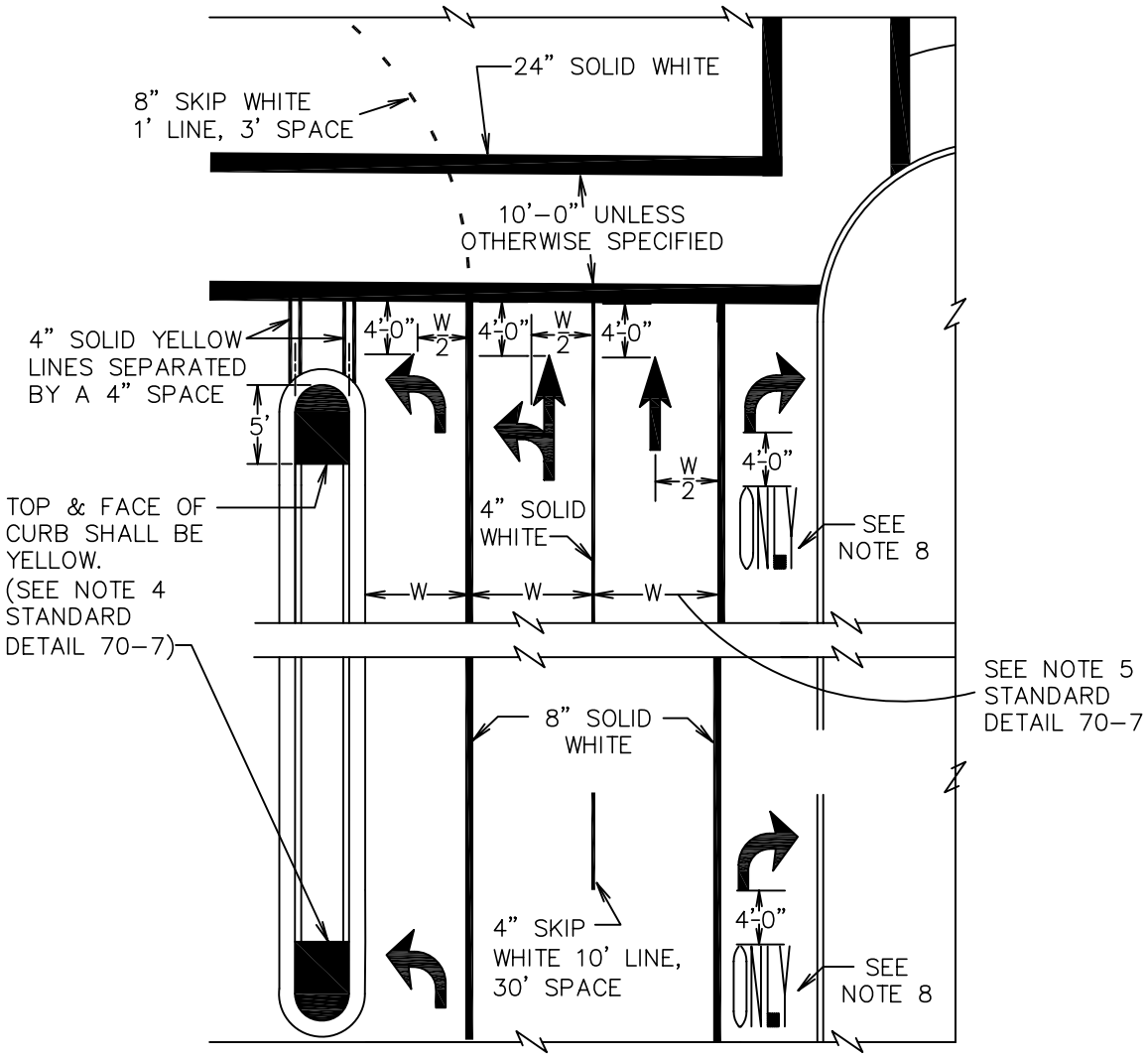

APPROACH TO INTERSECTION

1. ARROW MARKINGS SHALL BE PLACED AT THE START OF AND AT THE INTERSECTION OF AUXILIARY TURN LANES. ADDITIONAL ARROW MARKINGS SHALL BE PLACED AND SPACED PROPORTIONATELY WHEN AUXILIARY TURN LANES EXCEED 150'.
2. REGULAR LANE LINES SHALL BE A SOLID WHITE 4" LINE.
3. LEFT AND RIGHT TURN DELINEATOR LINES SHALL BE A SOLID WHITE 8" LINE.
4. 4" SOLID WHITE LINES APPROACHING INTERSECTIONS ARE 100' IN LENGTH MINIMUM.
5. 4" SOLID WHITE LINES DEPARTING INTERSECTIONS ARE 50' IN LENGTH PLUS THE PARTIAL SKIP CYCLE LENGTH.
6. DOTTED GUIDELINES USED FOR DUAL TURN LANES SHALL BE 8" WHITE SKIP WITH A 1' LINE AND A 3' SPACE.
7. STRAIGHT AHEAD AND COMBINATION ARROWS SHALL BE USED ONLY WHEN INDICATED ON DRAWINGS.
8. "ONLY" WORD MARKINGS ARE USED ONLY WHEN A THROUGH LANE TERMINATES AS A TURN.

MUNICIPALITY OF ANCHORAGE	SCALE: NTS APPROVED: REVISED: 10/08	INTERSECTION APPROACH STRIPING	SECTION # 70.10 DETAIL # 70-8

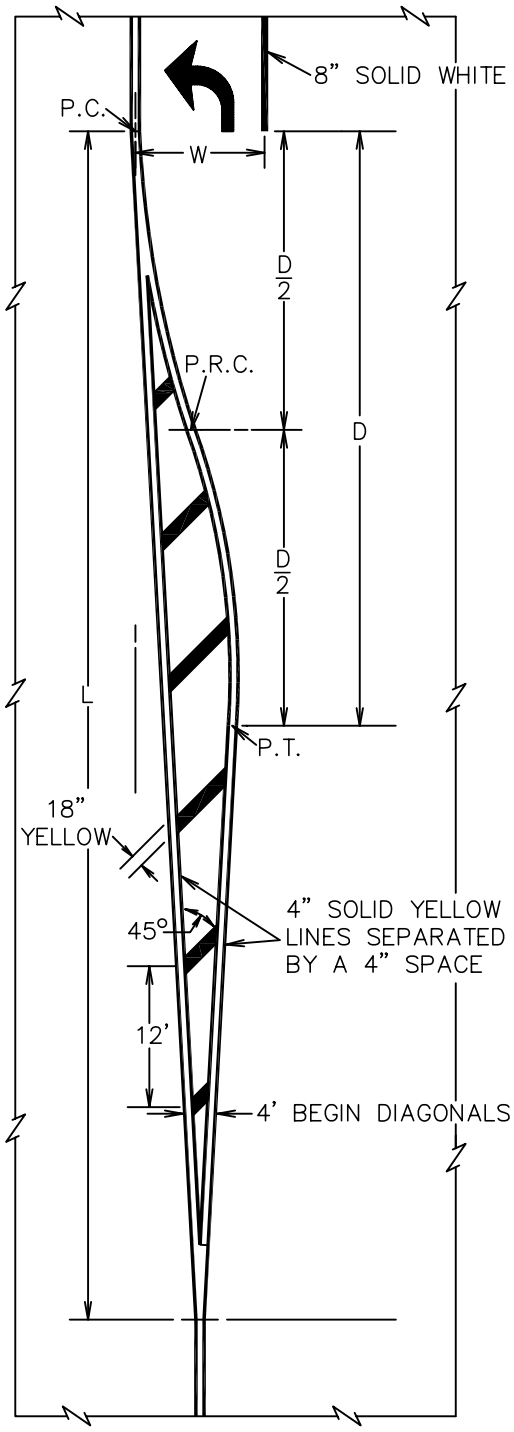

LEFT-TURN POCKET APPROACH

SEE STANDARD DETAIL 70–7 FOR GENERAL STRIPING NOTES

MUNICIPALITY OF ANCHORAGE	SCALE: NTS APPROVED: REVISED: 10/08	LEFT-TURN POCKET APPROACH STRIPING	SECTION # 70.11 DETAIL # 70–9

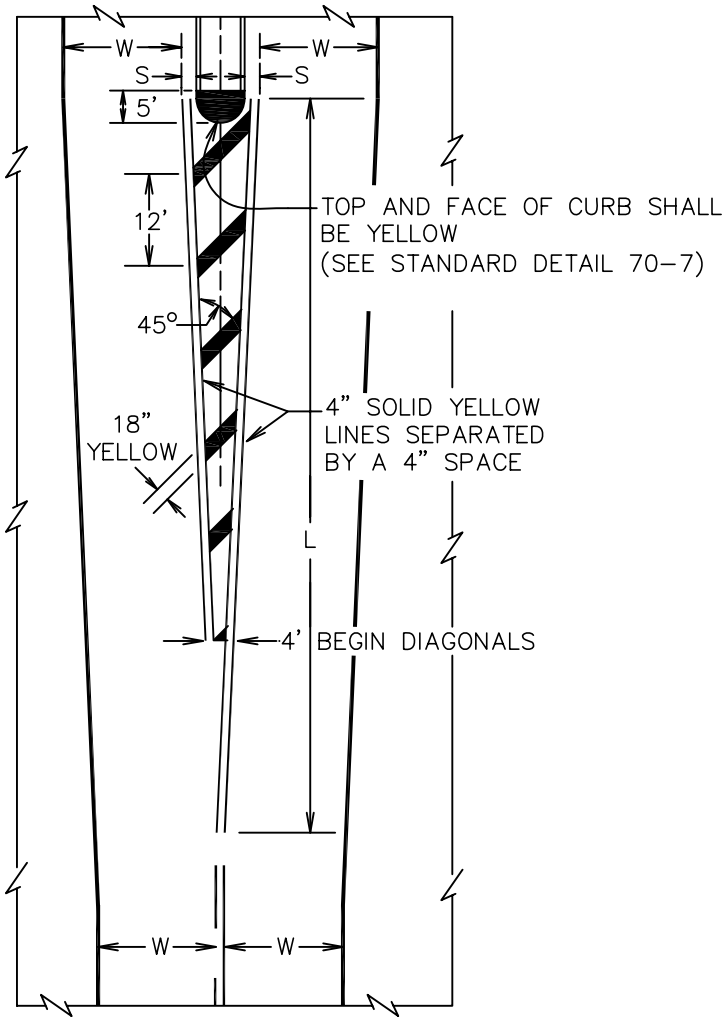

RAISED MEDIAN APPROACH

SEE STANDARD DETAIL 70-7 FOR GENERAL STRIPING NOTES

MUNICIPALITY OF ANCHORAGE	SCALE: NTS APPROVED: REVISED: 10/08	**RAISED MEDIAN APPROACH AND TWO LANES DRIVE TO RIGHT STRIPING**	SECTION # 70.10 DETAIL # 70-10

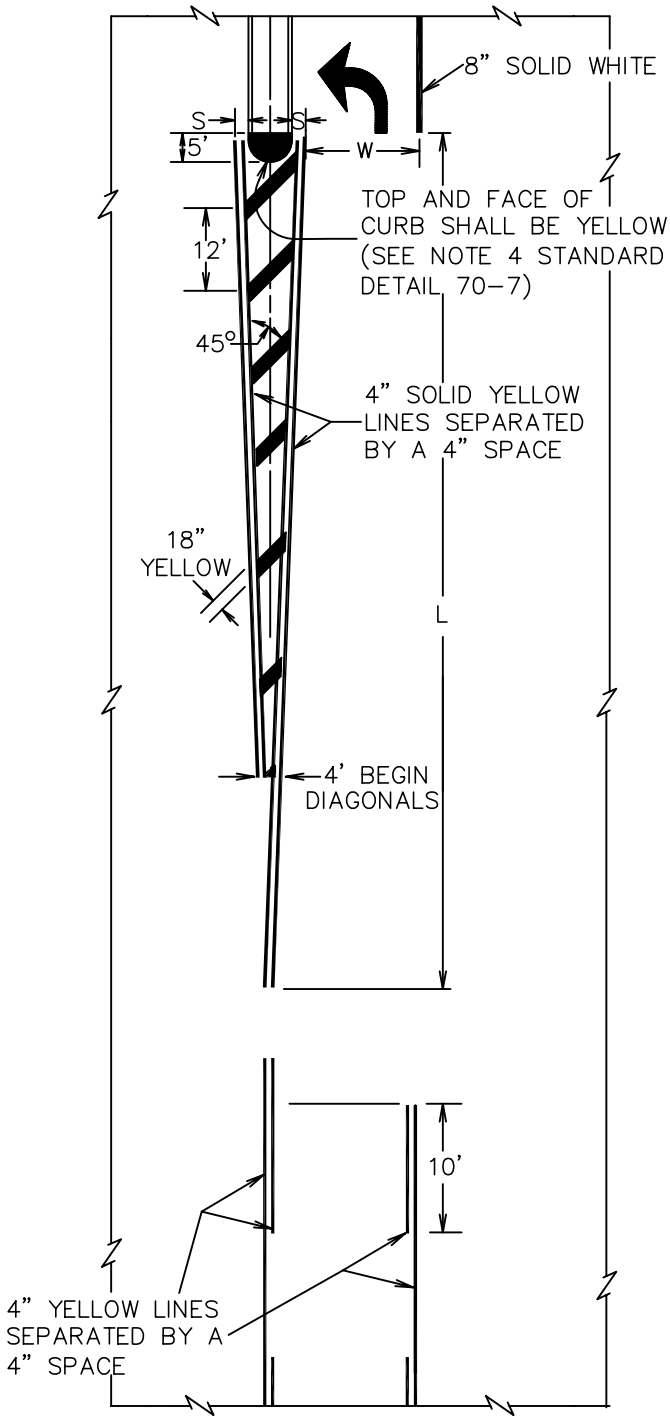

LEFT-TURN POCKET APPROACH FROM TWO WAY CENER LEFT-TURN LANE

SEE STANDARD DETAIL 70-7 FOR GENERAL STRIPING NOTES

MUNICIPALITY OF ANCHORAGE	SCALE: NTS APPROVED: REVISED: 10/08	LEFT-TURN POCKET APPROACH FROM TWO WAY CENTER LEFT-TURN LANE STRIPING	SECTION # 70.10 DETAIL # 70-11

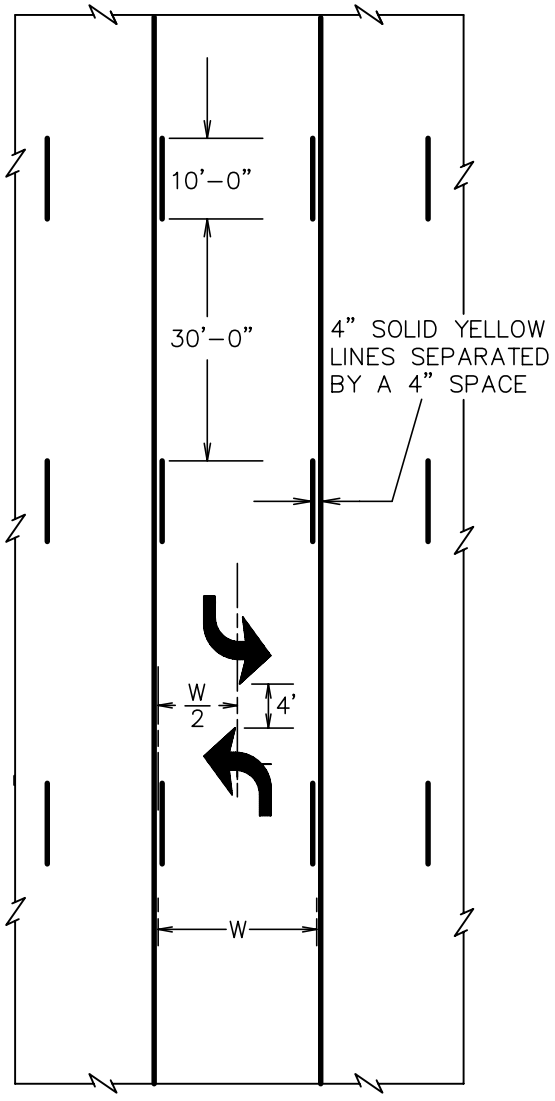

TWO WAY CENTER LEFT TURN LANE

1. INSTALL DUAL TURN LANE ARROWS EVERY 200', UNLESS OTHERWISE SPECIFIED.

MUNICIPALITY OF ANCHORAGE	SCALE: NTS APPROVED: REVISED: 10/08	**TWO WAY CENTER LEFT TURN LANE STRIPING**	SECTION # 70.10 DETAIL # 70–12

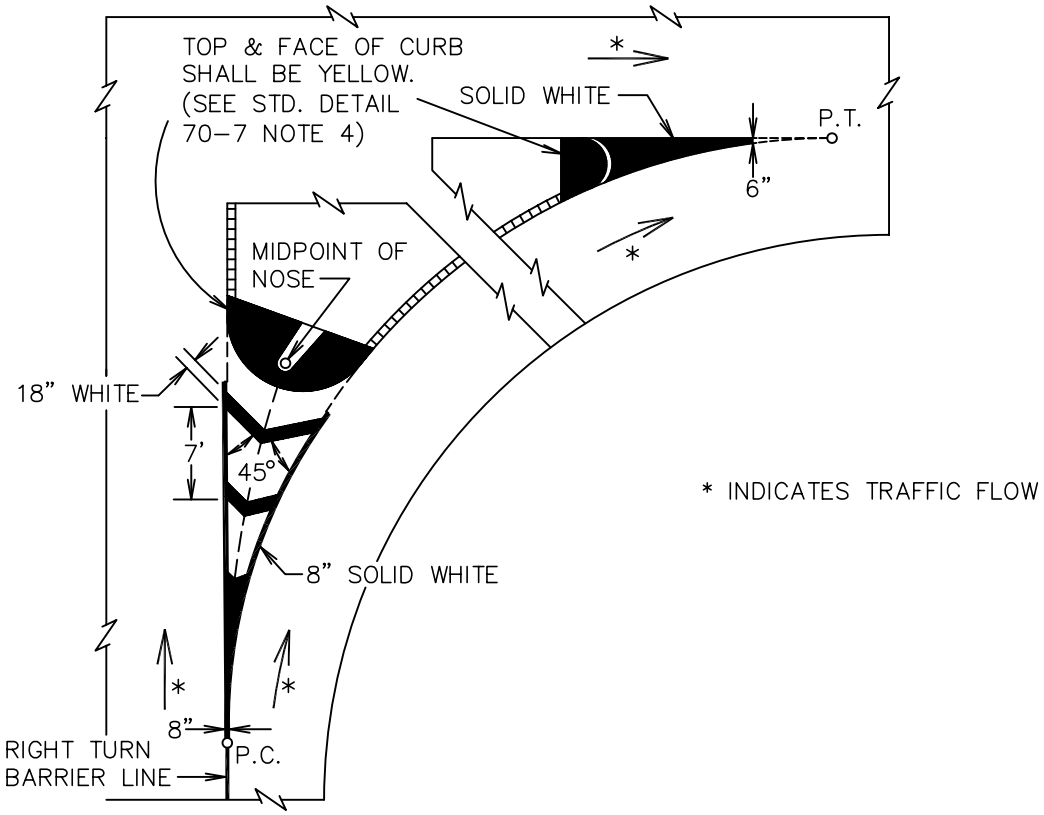

PASSING ON BOTH SIDES OF AN OBSTRUCTION

MUNICIPALITY OF ANCHORAGE	SCALE: NTS APPROVED: REVISED: 10/08	PASSING ON BOTH SIDES OF AN OBSTRUCTION	SECTION # 70.10 DETAIL # 70-13

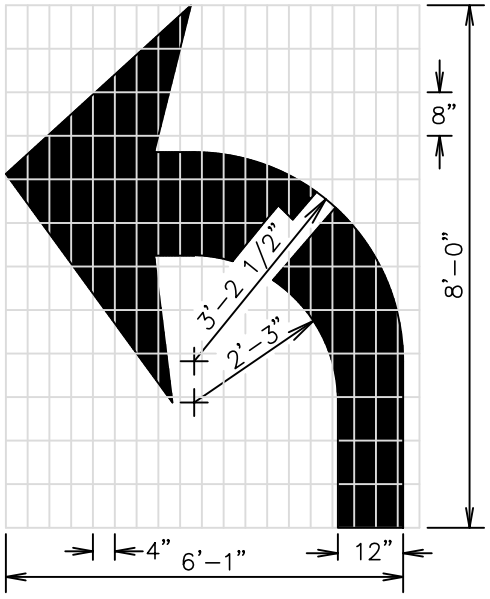

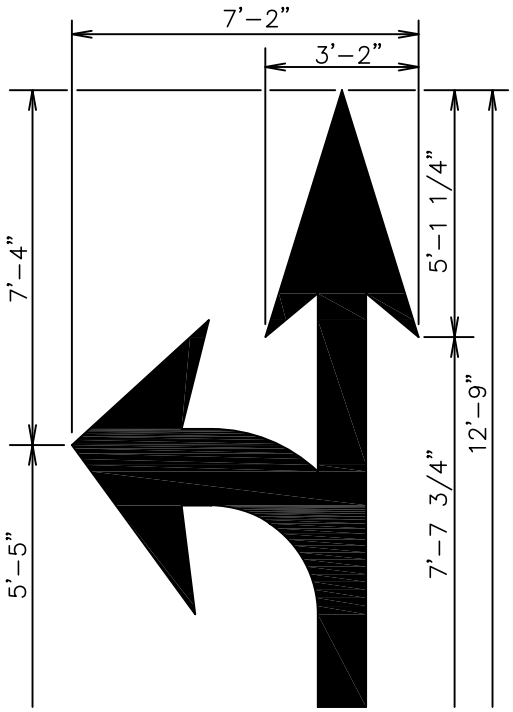

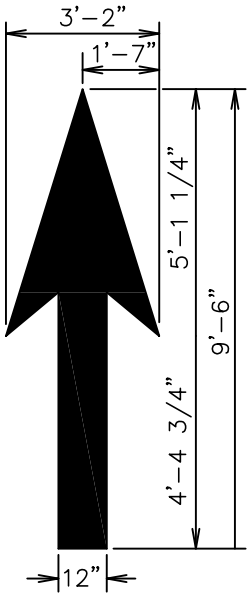

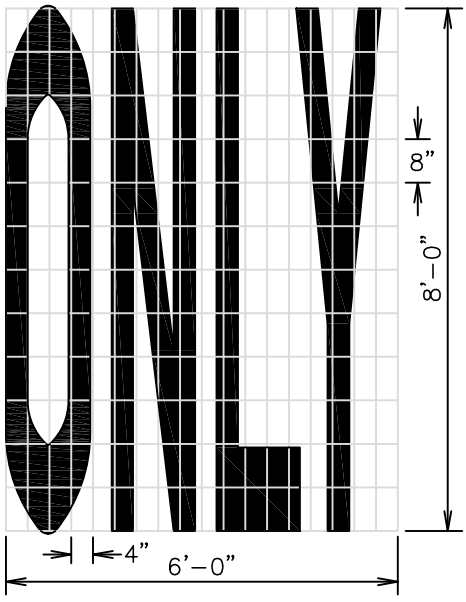

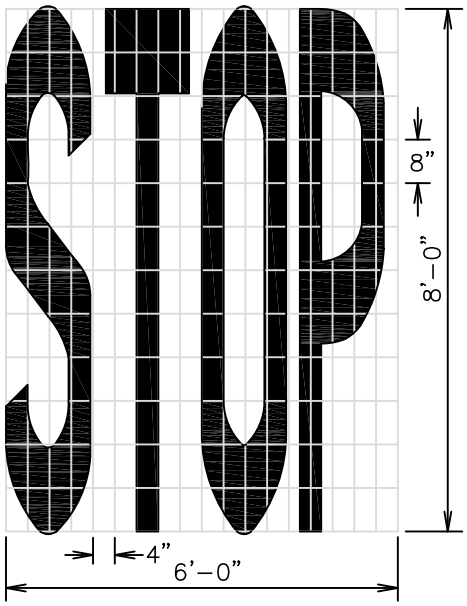

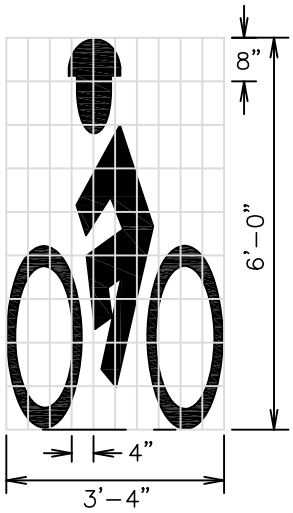

LAYOUT TEMPLATES FOR STENCILS

1. ALL SYMBOLS SHOWN SHALL BE WHITE AND REFLECTORIZED.
2. RIGHT AND LEFT TURN AUXILIARY LANE MARKINGS ARE IDENTICAL BUT REVERSED.

REVISION: 2/10 ADDED BIKE LANE PAVEMENT MARKING

MUNICIPALITY OF ANCHORAGE	SCALE: NTS APPROVED: REVISED: 2/10	LAYOUT TEMPLATES FOR STENCILS	SECTION # 70.10 DETAIL # 70–14

MUNICIPALITY OF ANCHORAGE

SCALE: NTS

APPROVED:

REVISED: 10/08

APPROACH TO RAILROAD CROSSING ON 2 LANE 2 WAY HIGHWAY

SECTION # 70.10

DETAIL # 70–15

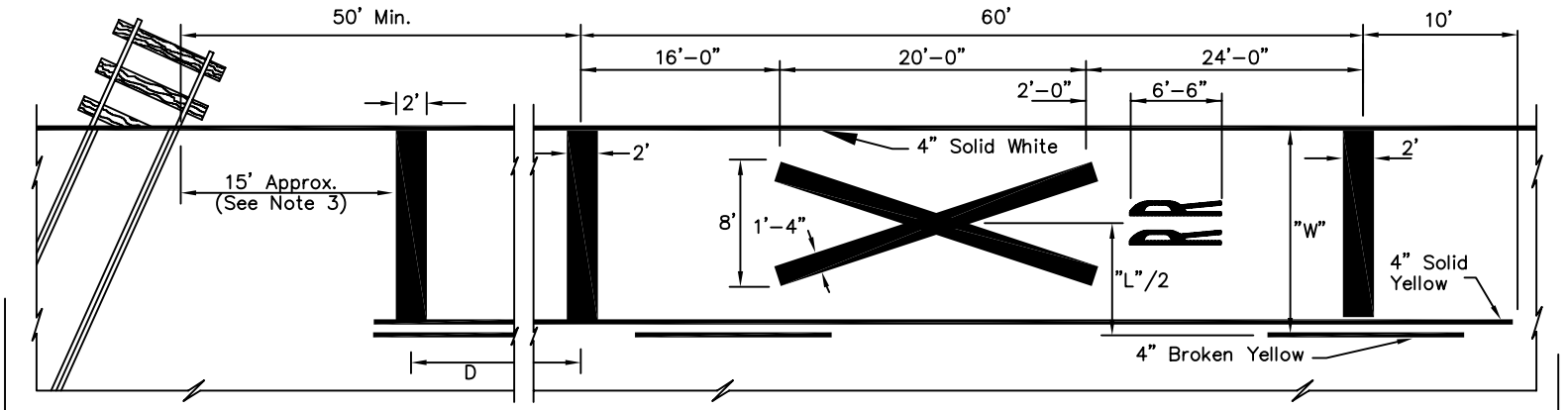

APPROACH TO RAILROAD CROSSING ON 2 LANE 2 WAY HIGHWAY

NOTES:

1. ALL MARKINGS SOLID WHITE UNLESS INDICATED OTHERWISE.

2. ON 4–LANE ROADWAYS THE RAILROAD CROSSING APPROACH MARKING SHALL BE PLACED IN EACH LANE OF THE APPROACH.

3. LOCATE STOP BAR 15' FROM RAILROAD TRACK OR 8' FROM GATE, IF PRESENT.

4. EDGE LINES AND LANE LINES ON A UNI–DIRECTIONAL APPROACH SHALL BE PLACED IN A NORMAL MANNER EXCEPT THAT THE LANE LINE(S) SHALL BE SOLID 4" WHITE IN LIEU OF BROKEN FOR A DISTANCE = (D+60') IN ADVANCE OF THE STOP BANDS.

POSTED LIMIT	D
30 M.P.H.	225'
40	350'
50	475'
60	625'

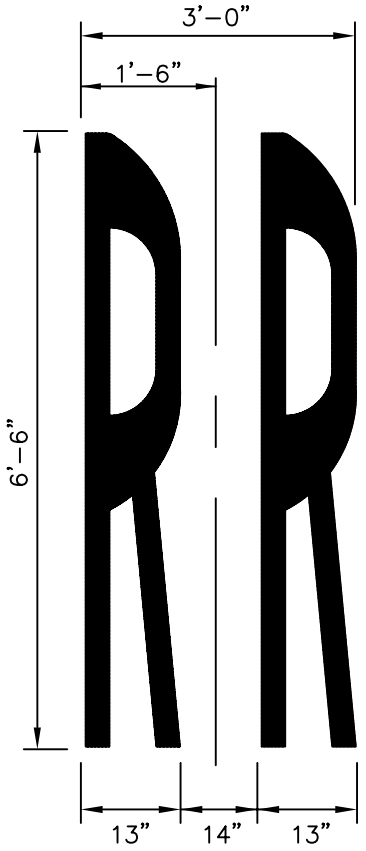

RAILROAD SYMBOL

MUNICIPALITY OF ANCHORAGE

SCALE: NTS

APPROVED:

REVISED: 10/08

TYPICAL UNCURBED RETURN WITH PATHWAY

SECTION # 70.10

DETAIL # 70–16

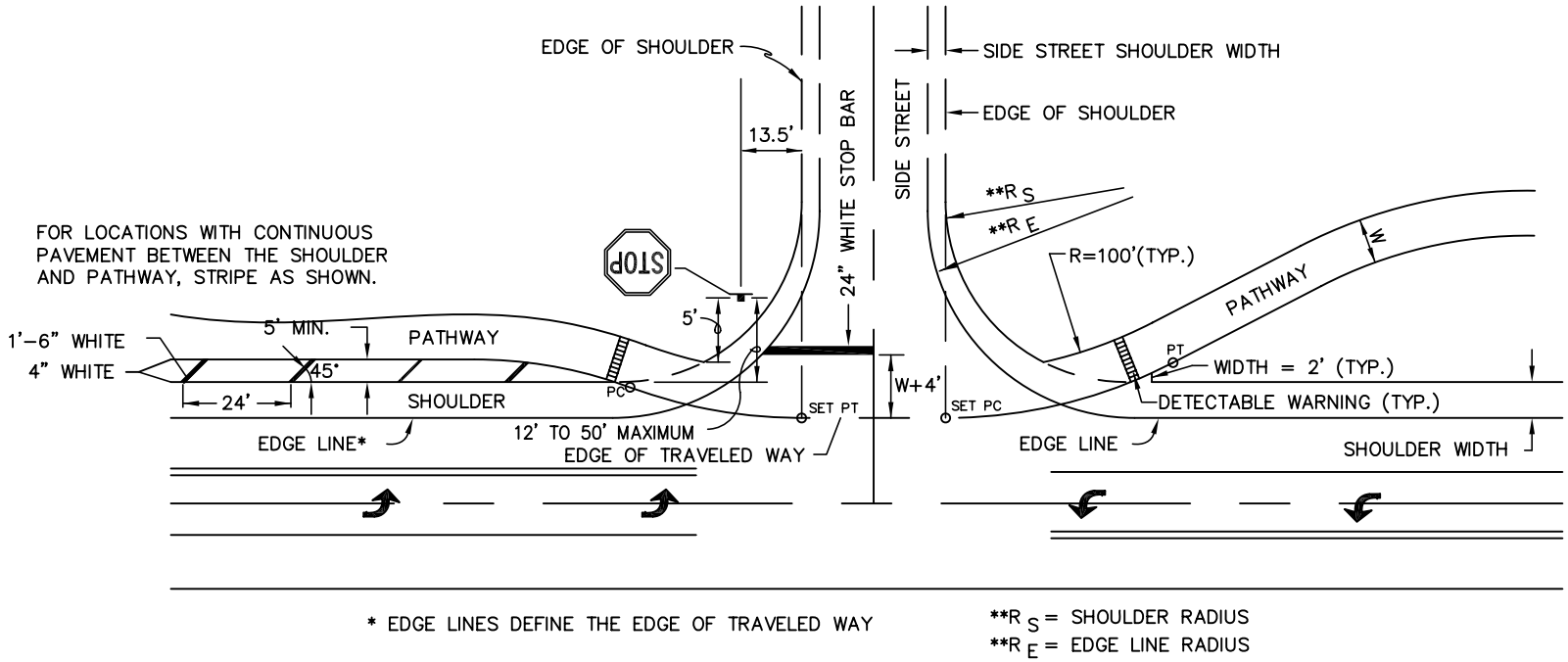

TYPICAL UNCURBED RETURN WITH PATHWAY

1. WHEN THE SIDE STREET LACKS EDGE LINES, BEGIN AND END THE MAIN STREET EDGE LINES AT THE MAIN STREET PAVEMENT RETURNS AND EXTEND THE STOP BAR TO THE EDGE OF PAVEMENT AS SHOWN IN THE *UNCURBED RETURN WITHOUT PATHWAY* DETAIL.
2. INSTALL DETECTABLE WARNING TILES IN PATHWAYS AT THE LOCATIONS SHOWN. INSTALL ACCORDING TO THE MANUFACTURER'S WRITTEN INSTALLATION INSTRUCTIONS.
3. BREAK THE MAIN STREET CENTERLINE MARKINGS AT SIDE STREET INTERSECTIONS ONLY WHEN LEFT TURN LANES ARE PROVIDED. OTHERWISE, INSTALL THEM CONTINUOUSLY THROUGH THE INTERSECTION.
4. LOCATE STOP SIGNS SO THEY ARE:
   A. VISIBLE TO APPROACHING TRAFFIC AND
   B. AS NEAR TO THE STOP BAR AS PRACTICABLE.
5. WHEN THE SIDE STREET LACKS THE RIGHT OF WAY TO INSTALL THE STOP SIGN AT THE 13.5' OFFSET, REDUCE THE OFFSET TO FIT THE SIGN WITHIN THE RIGHT OF WAY. IF SIGHT OBSTRUCTIONS OBSCURE THE SIGN, RELOCATE THE SIGN SO IT IS VISIBLE.

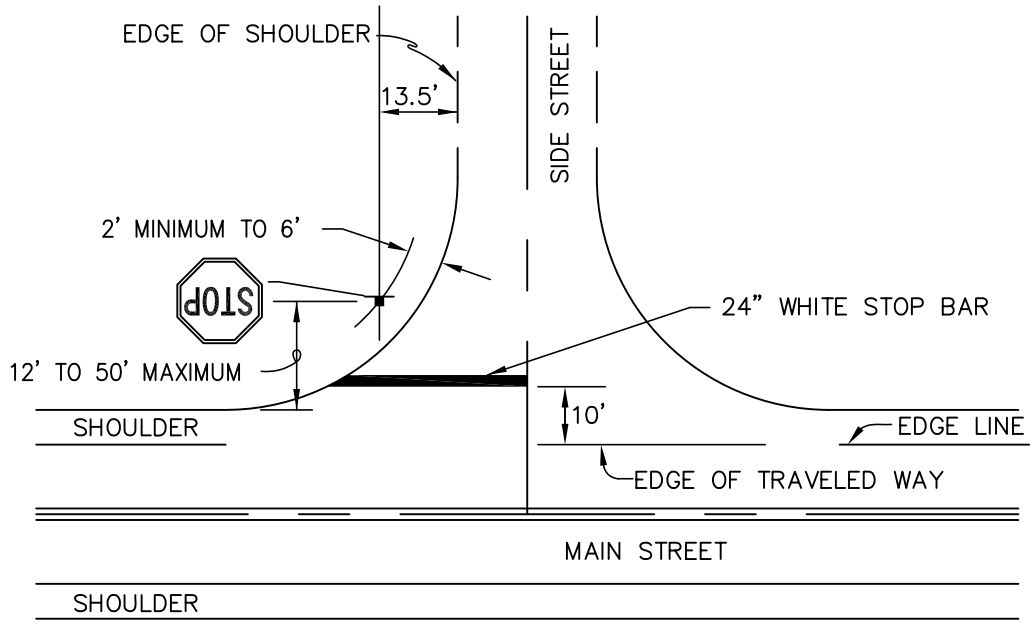

TYPICAL UNCURBED RETURN WITHOUT PATHWAY

NOTES:

1. BREAK THE MAIN STREET CENTERLINE MARKINGS AT SIDE STREET INTERSECTIONS ONLY WHEN LEFT TURN LANES ARE PROVIDED. OTHERWISE, INSTALL THEM CONTINUOUSLY THROUGH THE INTERSECTION.
2. LOCATE STOP SIGNS SO THEY ARE:
   A. VISIBLE TO APPROACHING TRAFFIC AND
   B. AS NEAR TO THE STOP BAR AS PRACTICABLE.
3. WHEN THE SIDE STREET LACKS THE RIGHT OF WAY TO INSTALL THE STOP SIGN AT THE 13.5' OFFSET, REDUCE THE OFFSET TO FIT THE SIGN WITHIN THE RIGHT OF WAY. IF SIGHT OBSTRUCTIONS OBSCURE THE SIGN, RELOCATE THE SIGN SO IT IS VISIBLE.

MUNICIPALITY OF ANCHORAGE	SCALE: NTS APPROVED: REVISED: 10/08	TYPICAL UNCURBED RETURN WITHOUT PATHWAY	SECTION # 70.10 DETAIL # 70–17

MUNICIPALITY OF ANCHORAGE

SCALE: NTS

APPROVED:

REVISED: 10/08

TYPICAL CURB RETURN WITH SIDEWALK

SECTION # 70.10

DETAIL # 70–18

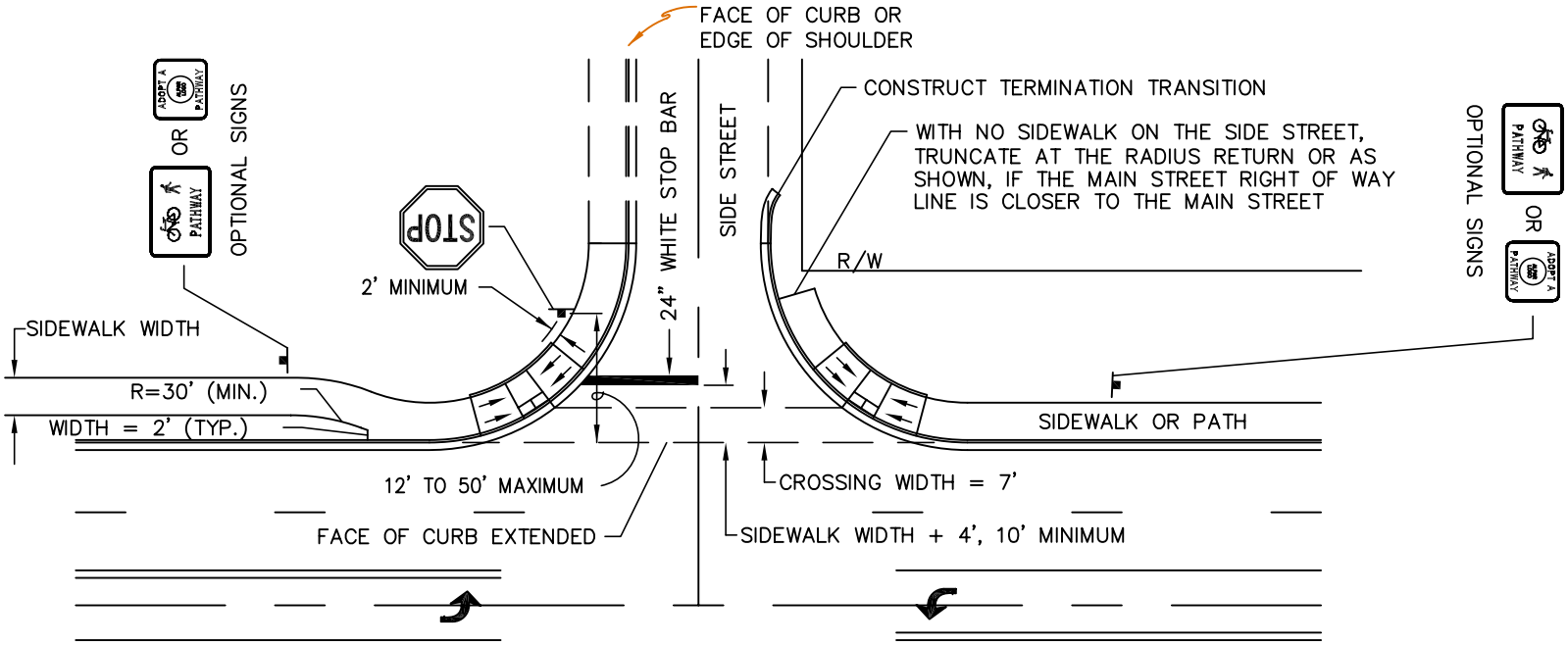

TYPICAL CURBED RETURN WITH SIDEWALK

NOTES:

1. WHEN SIDEWALKS ARE SEPARATED FROM THE BACK OF CURB, JOIN THE TWO AS SHOWN USING A REVERSE CURVE WITH A MINIMUM RADIUS OF 30'.
2. BREAK THE MAIN STREET CENTERLINE MARKINGS AT SIDE STREET INTERSECTIONS ONLY WHEN LEFT TURN LANES ARE PROVIDED. OTHERWISE, INSTALL THEM CONTINUOUSLY THROUGH THE INTERSECTION.
3. LOCATE STOP SIGNS SO THEY ARE
   - A. VISIBLE TO APPROACHING TRAFFIC AND
   - B. AS NEAR TO THE STOP BAR AS PRACTICABLE.

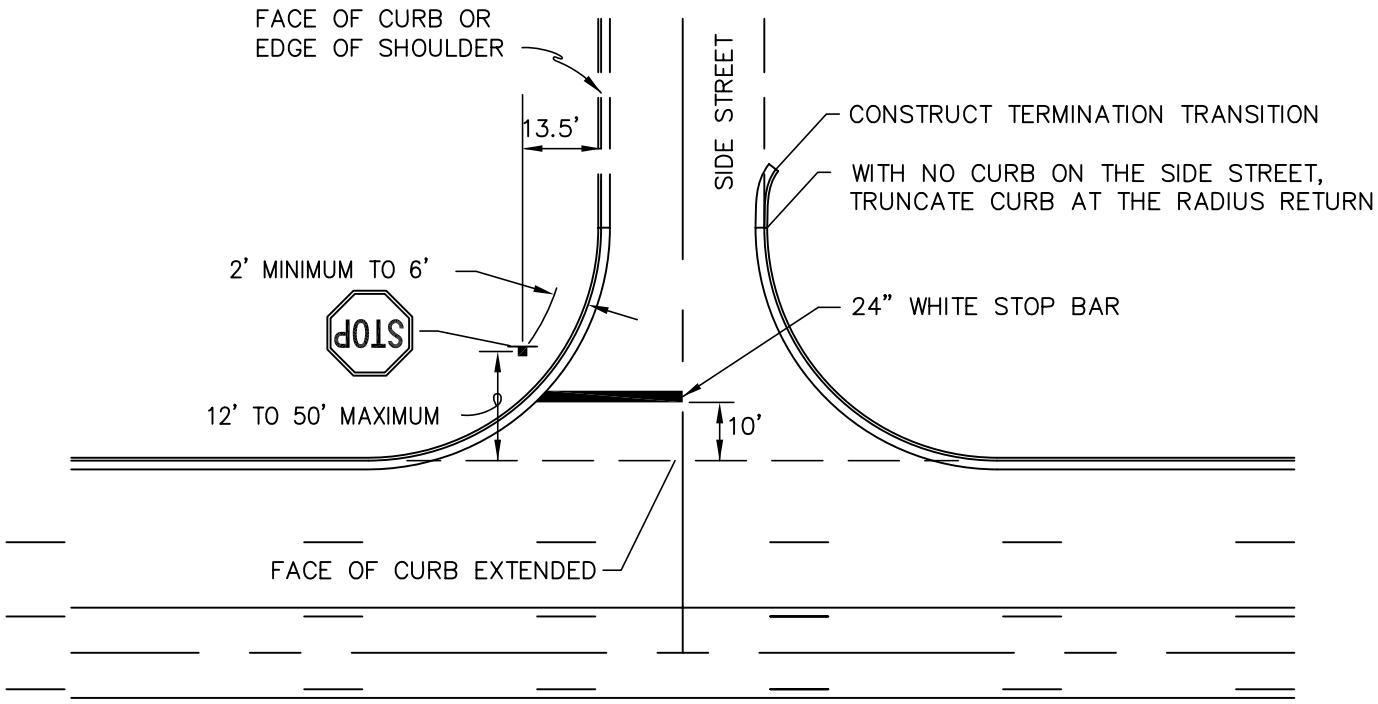

TYPICAL CURBED RETURN WITHOUT SIDEWALK

NOTES:

1. BREAK THE MAIN STREET CENTERLINE MARKINGS AT SIDE STREET INTERSECTIONS ONLY WHEN LEFT TURN LANES ARE PROVIDED. OTHERWISE, INSTALL THEM CONTINUOUSLY THROUGH THE INTERSECTION.
2. LOCATE STOP SIGNS SO THEY ARE:
   A. VISIBLE TO APPROACHING TRAFFIC
   B. AS NEAR TO THE STOP BAR AS PRACTICABLE.
3. WHEN THE SIDE STREET LACKS THE RIGHT OF WAY TO INSTALL THE STOP SIGN AT THE 13.5' OFFSET, REDUCE THE OFFSET TO FIT THE SIGN WITHIN THE RIGHT OF WAY. IF SIGHT OBSTRUCTIONS OBSCURE THE STOP SIGN, RELOCATE THE SIGN SO IT IS VISIBLE.

MUNICIPALITY OF ANCHORAGE	SCALE: NTS APPROVED: REVISED: 10/08	**TYPICAL CURB RETURN WITHOUT SIDEWALK**	SECTION # 70.10 DETAIL # 70–19

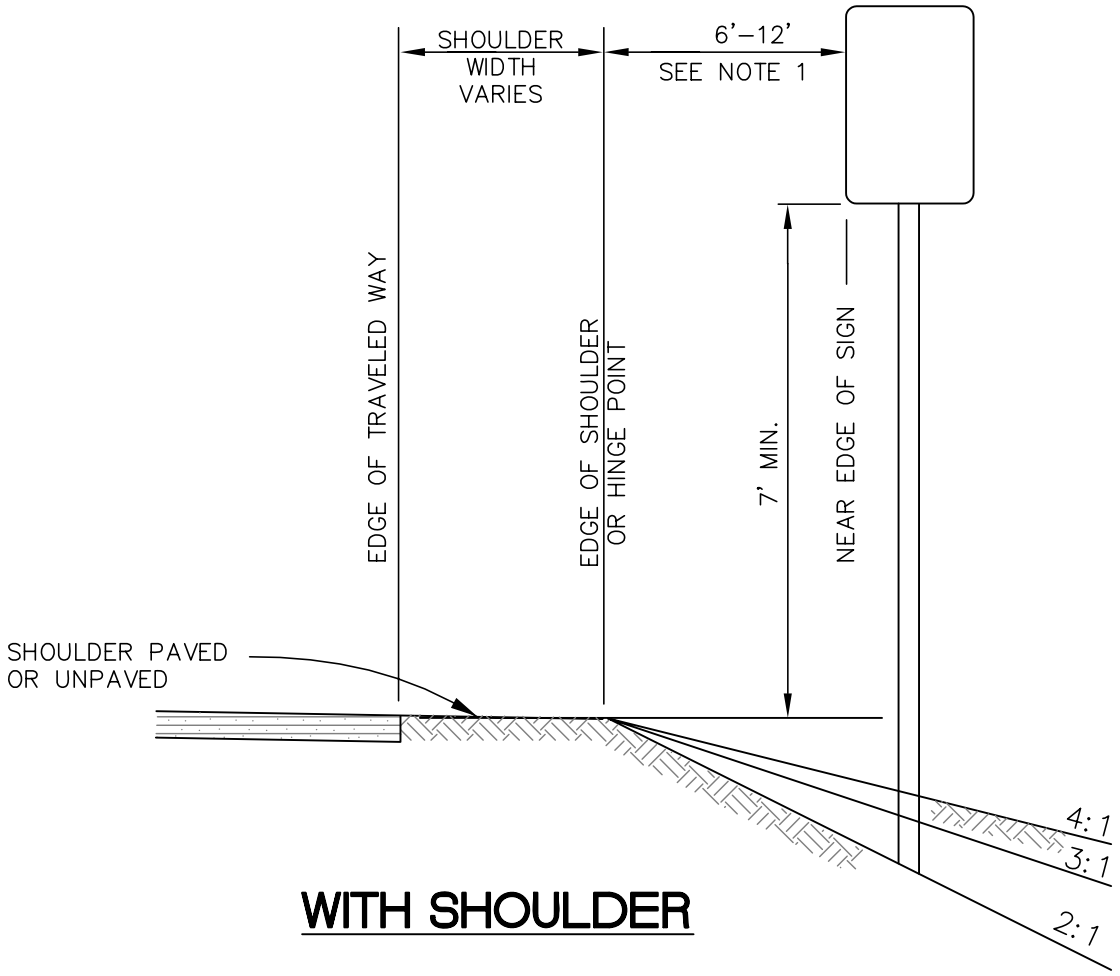

WITH SHOULDER

NOTES:

1. UNLESS SHOWN OTHERWISE ON THE DRAWINGS, THE STANDARD SIGN OFFSET IS 12'. THE MINIMUM IS 6'.
2. IF SIGNS EXTEND OVER SIDEWALKS, THE MINIMUM VERTICAL CLEARANCE IS 7'–0".
3. ADD 6" TO MOUNTING HEIGHT ON UNPAVED ROADS.
4. IF SIGNS EXTEND OVER BIKE PATHS, THE MINIMUM VERTICAL CLEARANCE IS 8'–0".
5. PAINT ALL SIGN MOUNTING FASTENERS ON SIGN FACE A COLOR MATCHING THE SIGN FACE.
6. ATTACH ALL SIGNS ZEES AND BRACES MOUNTED TO THE POSTS WITH 5/16" BOLTS WITH SELF–LOCKING NUTS.

MUNICIPALITY OF ANCHORAGE	SCALE: NTS APPROVED: REVISED: 10/08	POST MOUNTED SIGN WITH SHOULDER	SECTION # 70.11 DETAIL # 70–20

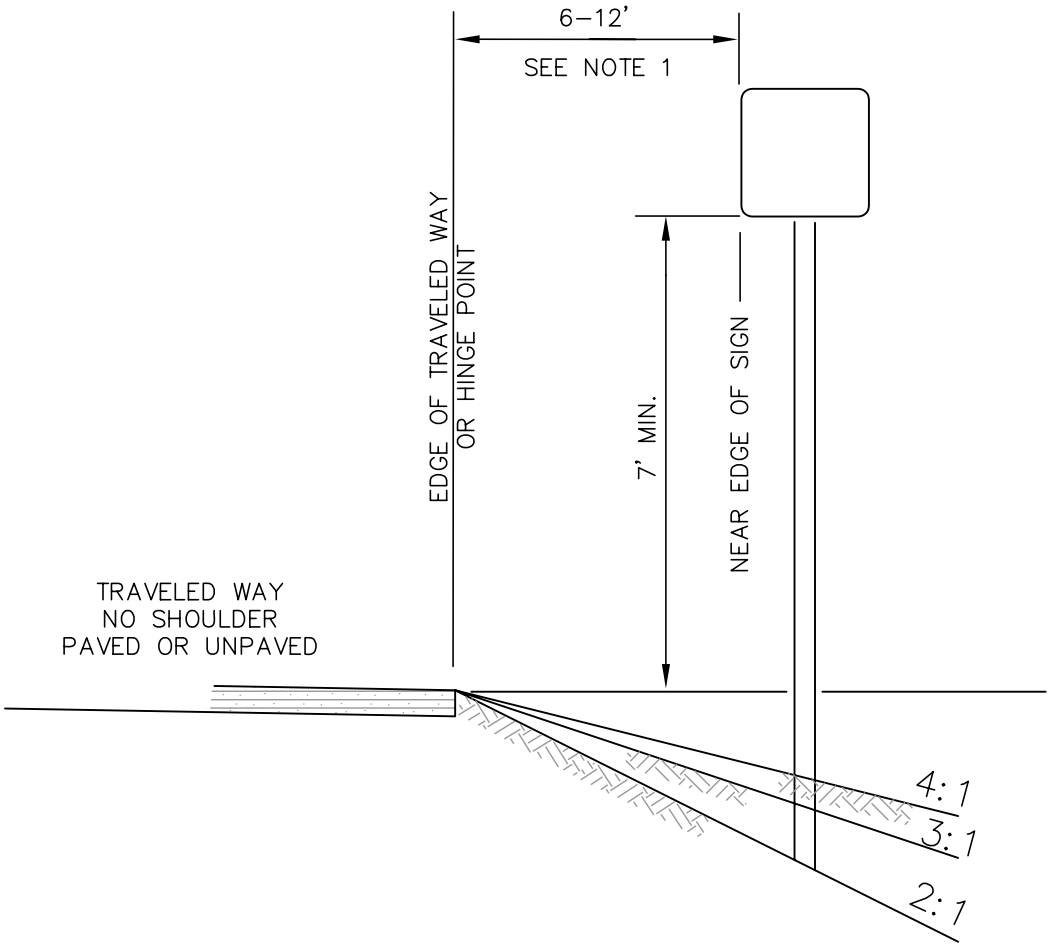

NO SHOULDER

NOTES:

1. UNLESS SHOWN OTHERWISE ON THE DRAWINGS, THE STANDARD SIGN OFFSET IS 12'. THE MINIMUM IS 6'.
2. IF SIGNS EXTEND OVER SIDEWALKS, THE MINIMUM VERTICAL CLEARANCE IS 7'–0".
3. ADD 6" TO MOUNTING HEIGHT ON UNPAVED ROADS.
4. IF SIGNS EXTEND OVER BIKE PATHS, THE MINIMUM VERTICAL CLEARANCE IS 8'–0".
5. PAINT ALL SIGN MOUNTING FASTENERS ON SIGN FACE A COLOR MATCHING THE SIGN FACE.
6. ATTACH ALL SIGNS ZEES AND BRACES MOUNTED TO THE POSTS WITH 5/16" BOLTS WITH SELF–LOCKING NUTS.

MUNICIPALITY OF ANCHORAGE	SCALE: NTS APPROVED: REVISED: 2/10	**POST MOUNTED SIGN WITH NO SHOULDER**	SECTION # 70.11 DETAIL # 70–21

REVISION: 2/10 FIXED TYPO FOR SETBACK DISTANCE

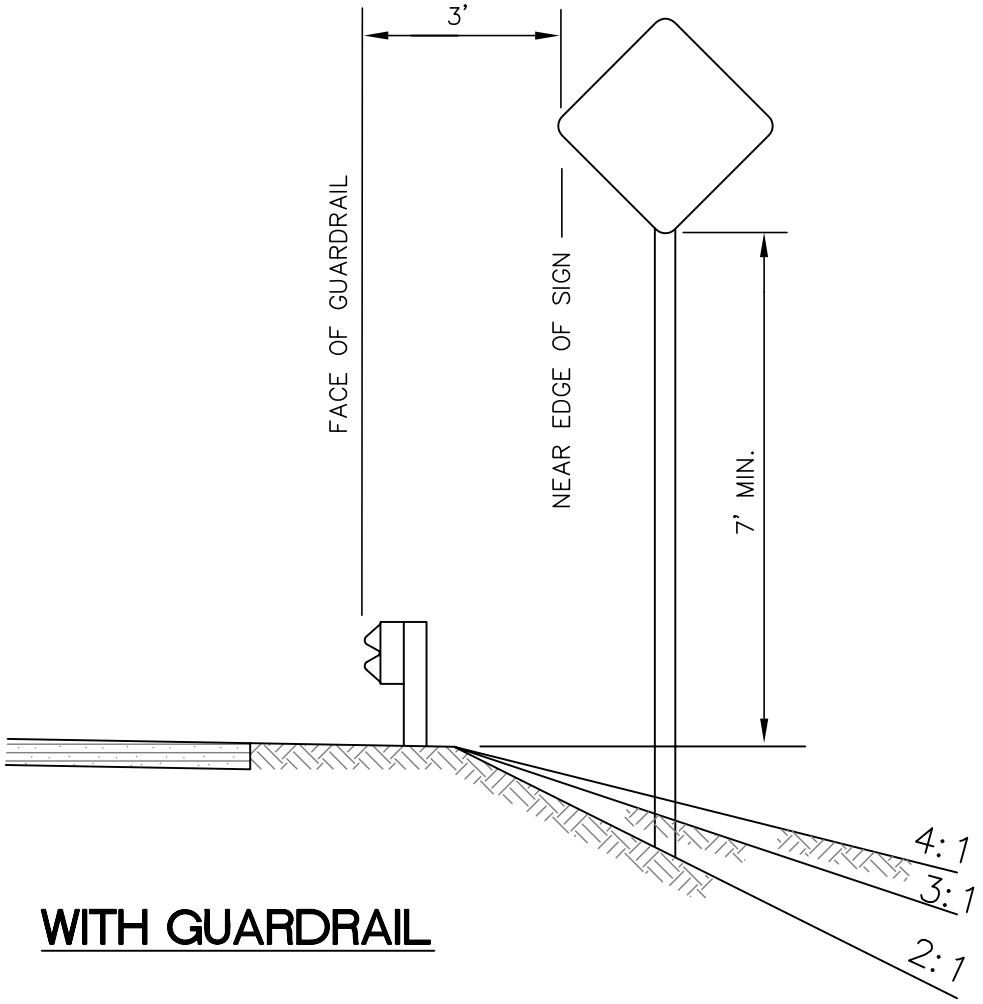

WITH GUARDRAIL

NOTES:

1. IF SIGNS EXTEND OVER SIDEWALKS, THE MINIMUM VERTICAL CLEARANCE IS 7'–0".
2. ADD 6" TO MOUNTING HEIGHT ON UNPAVED ROADS.
3. IF SIGNS EXTEND OVER BIKE PATHS, THE MINIMUM VERTICAL CLEARANCE IS 8'–0".
4. PAINT ALL SIGN MOUNTING FASTENERS ON SIGN FACE A COLOR MATCHING THE SIGN FACE.
5. ATTACH ALL SIGNS ZEES AND BRACES MOUNTED TO THE POSTS WITH 5/16" BOLTS WITH SELF–LOCKING NUTS.

MUNICIPALITY OF ANCHORAGE	SCALE: NTS APPROVED: REVISED: 10/08	POST MOUNTED SIGN WITH GUARDRAIL	SECTION # 70.11 DETAIL # 70–22

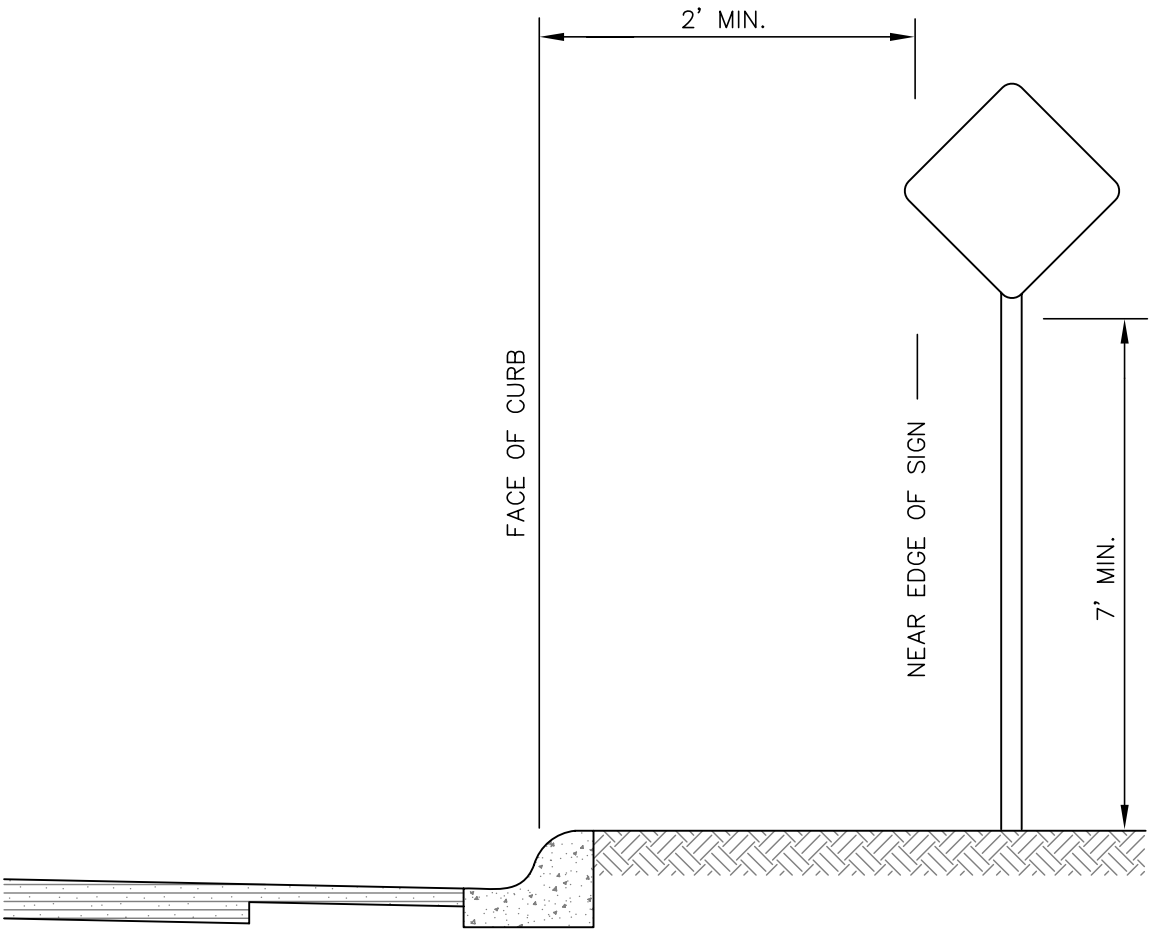

CURB WITHOUT SIDEWALK

NOTES:

1. PAINT ALL SIGN MOUNTING FASTENERS ON SIGN FACE A COLOR MATCHING THE SIGN FACE.
2. ATTACH ALL SIGNS ZEES AND BRACES MOUNTED TO THE POSTS WITH 5/16" BOLTS WITH SELF-LOCKING NUTS.

MUNICIPALITY OF ANCHORAGE	SCALE: NTS APPROVED: REVISED: 10/08	**POST MOUNTED SIGN CURB WITHOUT SIDEWALK**	SECTION # 70.11 DETAIL # 70-23

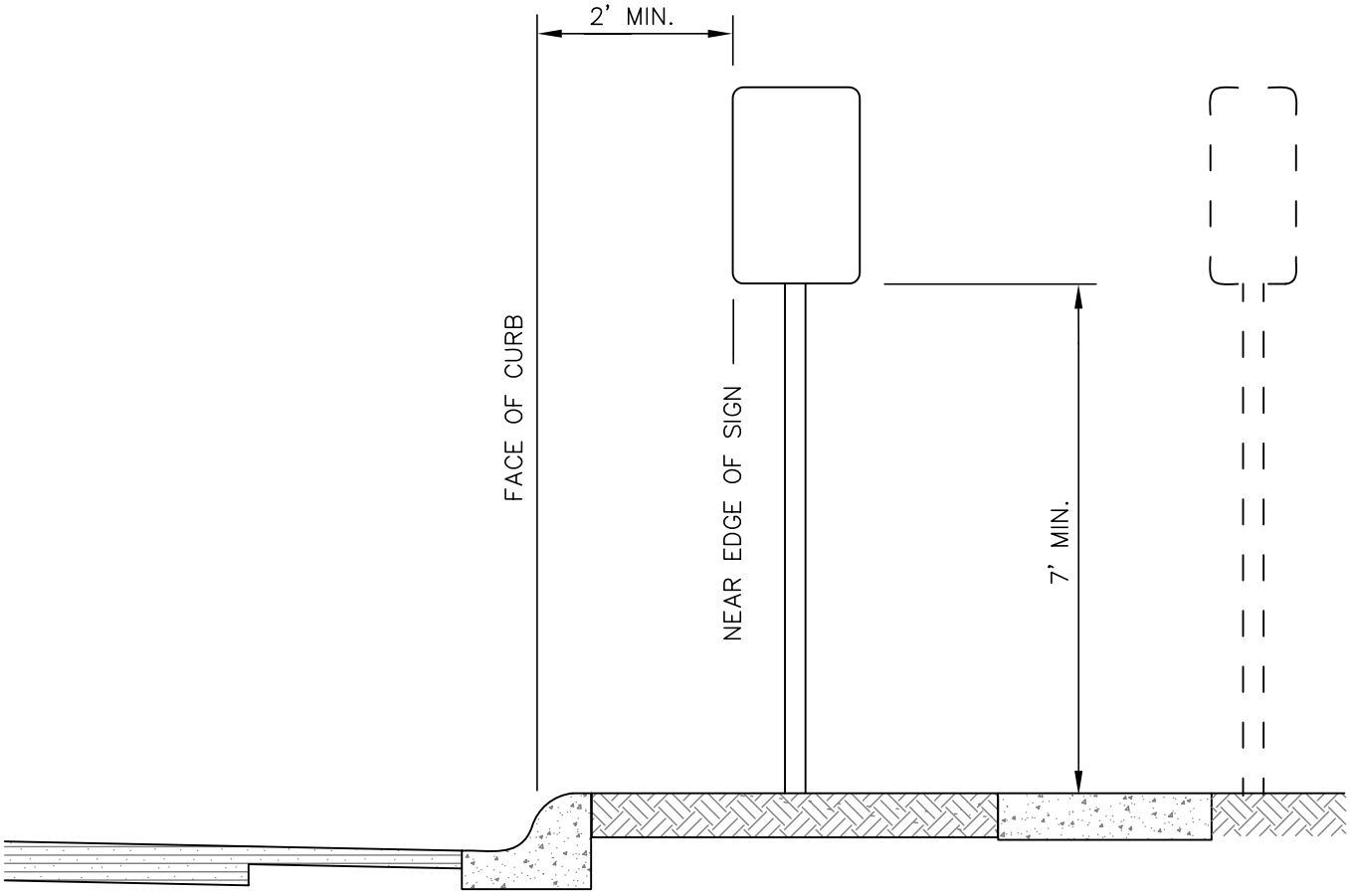

CURB WITH PARKWAY AND SIDEWALK

NOTES:

1. IF PARKWAY IS LESS THAN 5', SIGNS SHOULD BE PLACED BEHIND SIDEWALK.
2. IF SIGNS EXTEND OVER SIDEWALKS, THE MINIMUM VERTICAL CLEARANCE IS 7'–0".
3. IF SIGNS EXTEND OVER BIKE PATHS, THE MINIMUM VERTICAL CLEARANCE IS 8'–0".
4. PAINT ALL SIGN MOUNTING FASTENERS ON SIGN FACE A COLOR MATCHING THE SIGN FACE.
5. ATTACH ALL SIGNS ZEES AND BRACES MOUNTED TO THE POSTS WITH 5/16" BOLTS WITH SELF–LOCKING NUTS.

MUNICIPALITY OF ANCHORAGE	SCALE: NTS APPROVED: REVISED: 10/08	**POST MOUNTED SIGN CURB WITH PARKWAY AND SIDEWALK**	SECTION # 70.11 DETAIL # 70–24

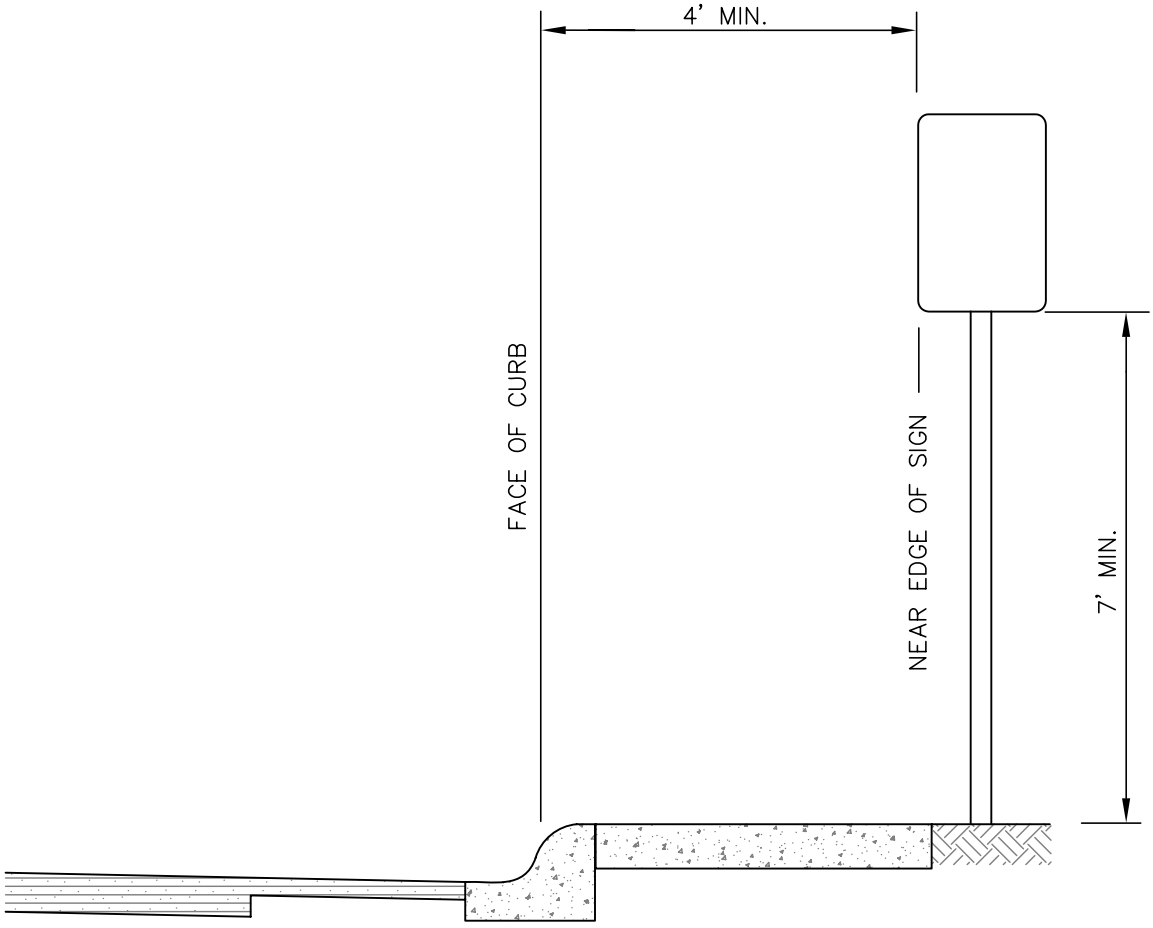

CURB WITH ATTACHED SIDEWALK

NOTE:

1. SIGN FACE SHALL BE PLACED OUTSIDE SIDEWALK EXCEPT WHEN ROW LIMITATIONS EXIST; FOR EXAMPLE IN THE CENTRAL BUSINESS DISTRICT OR OTHER SIMILAR DISTRICTS.

MUNICIPALITY OF ANCHORAGE	SCALE: NTS APPROVED: REVISED: 10/08	**POST MOUNTED SIGN CURB WITH SIDEWALK WITHOUT PARKWAY**	SECTION # 70.11 DETAIL # 70–25

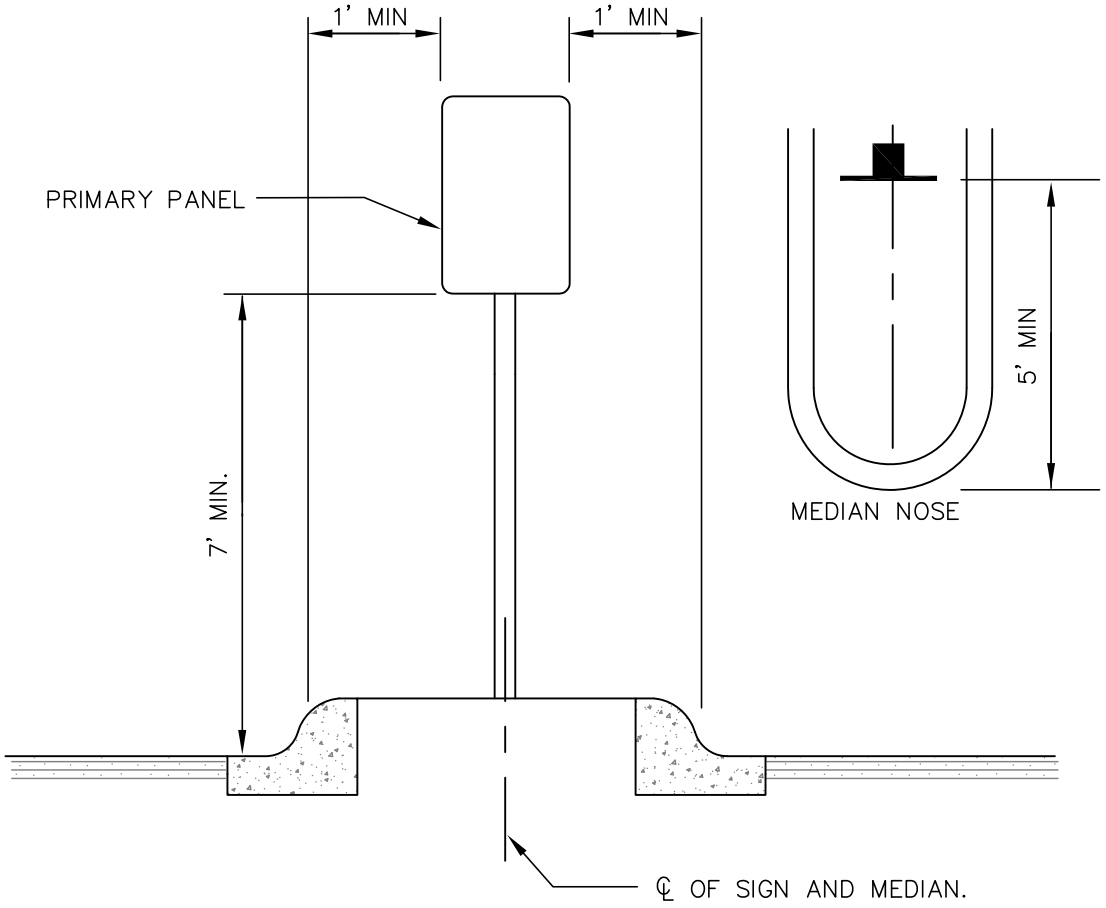

RAISED MEDIAN

NOTE:

IF AN OBJECT MARKER IS REQUIRED BY THE TRAFFIC ENGINEER, THE SIGN SHALL HAVE A MINIMUM FOUR FOOT (4') CLEARANCE FROM THE TOP OF MEDIAN TO THE BOTTOM OF SIGN.

MUNICIPALITY OF ANCHORAGE	SCALE: NTS APPROVED: REVISED: 3/13	**POST MOUNTED SIGN RAISED MEDIANS**	SECTION # 70.11 DETAIL # 70–26

REVISION: 3/13 DELETED OBJECT MARKER GRAPHIC AND ADDED NOTE

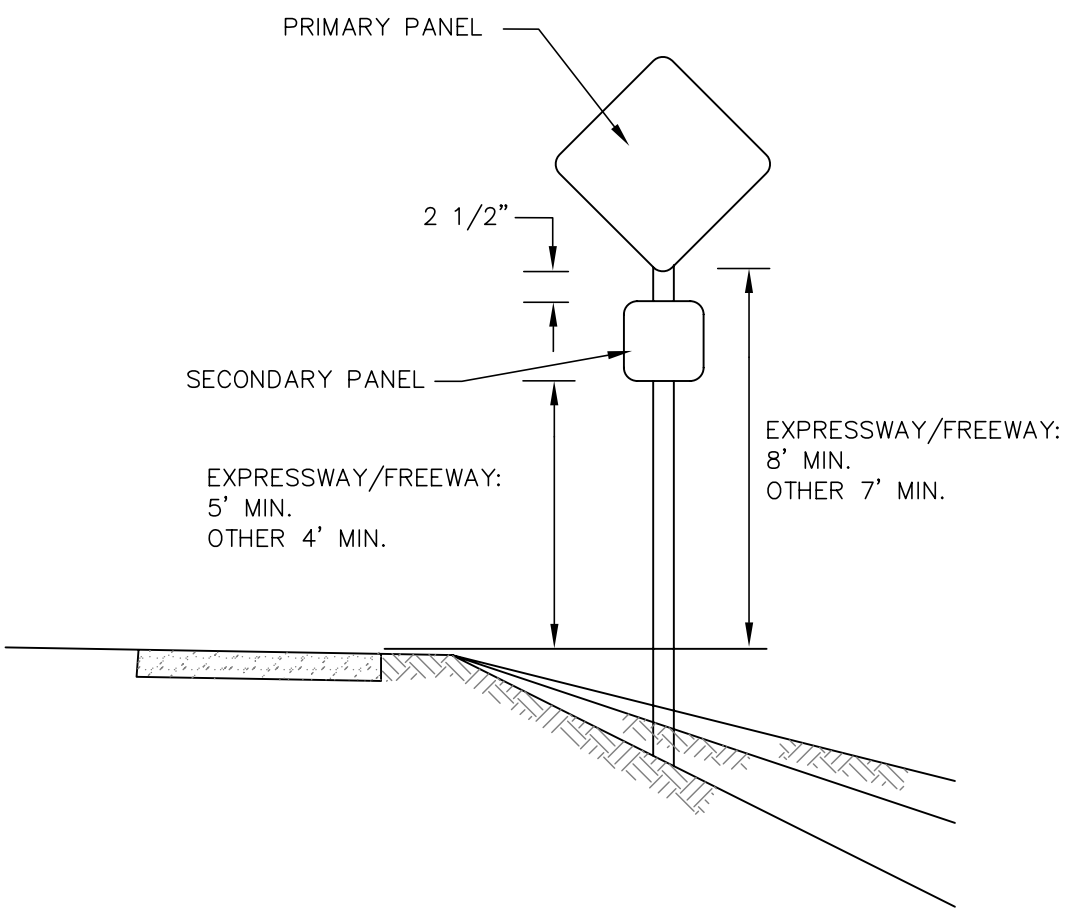

SECONDARY PANEL HEIGHT
ALL TWO PANEL MOUNTING

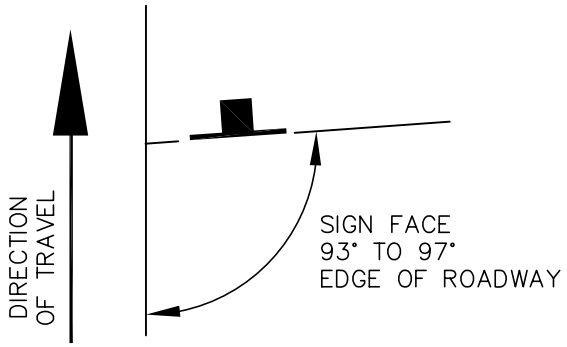

SIGN POSITIONING

MUNICIPALITY OF ANCHORAGE	SCALE: NTS APPROVED: REVISED: 10/08	**POST MOUNTED SIGN SECONDARY PANEL HEIGHT AND SIGN POSITIONING**	SECTION # 70.11 DETAIL # 70–27

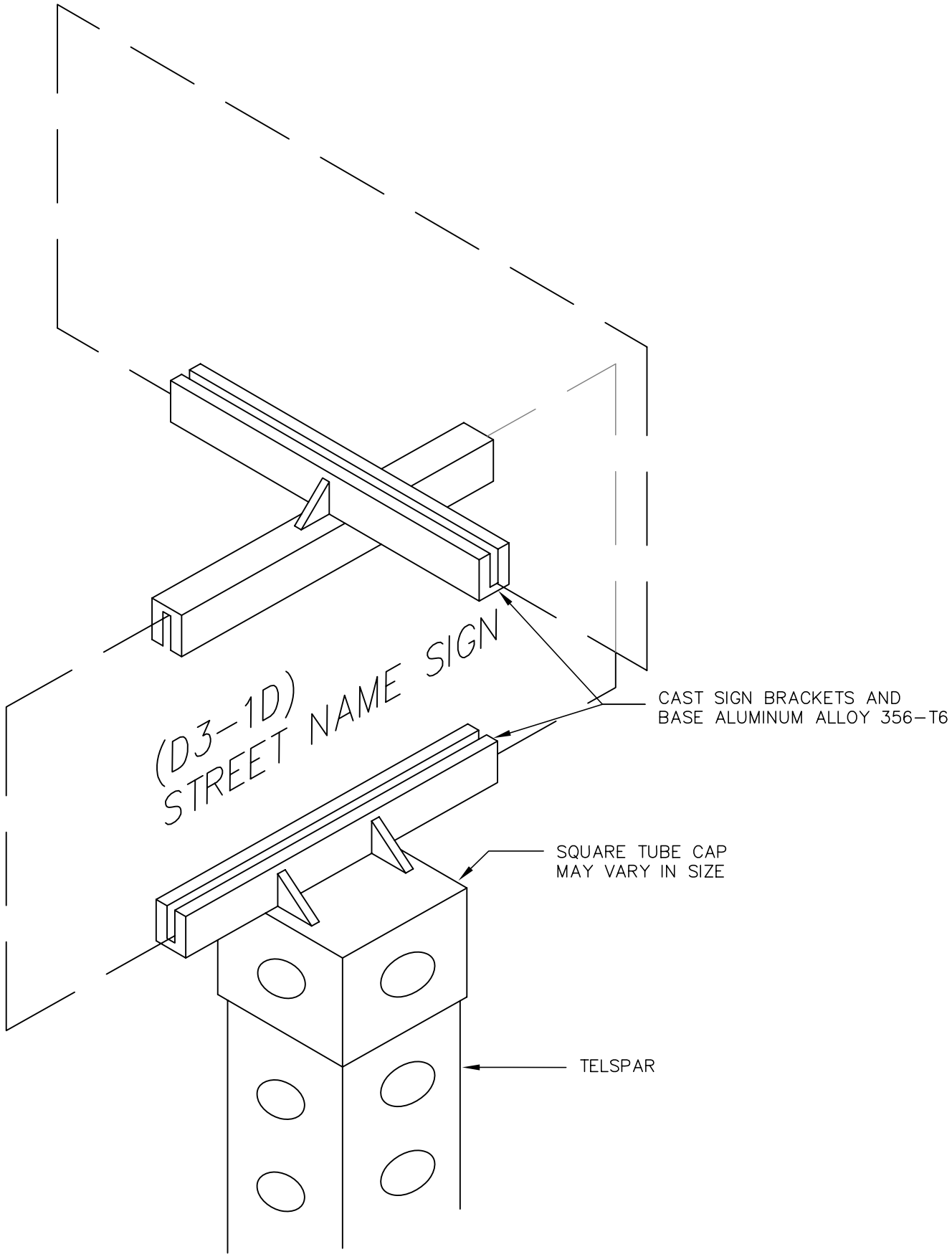

MUNICIPALITY OF ANCHORAGE	SCALE: NTS APPROVED: REVISED: 10/08	**STREET NAME SIGNS**	SECTION # 70.11 DETAIL # 70-28

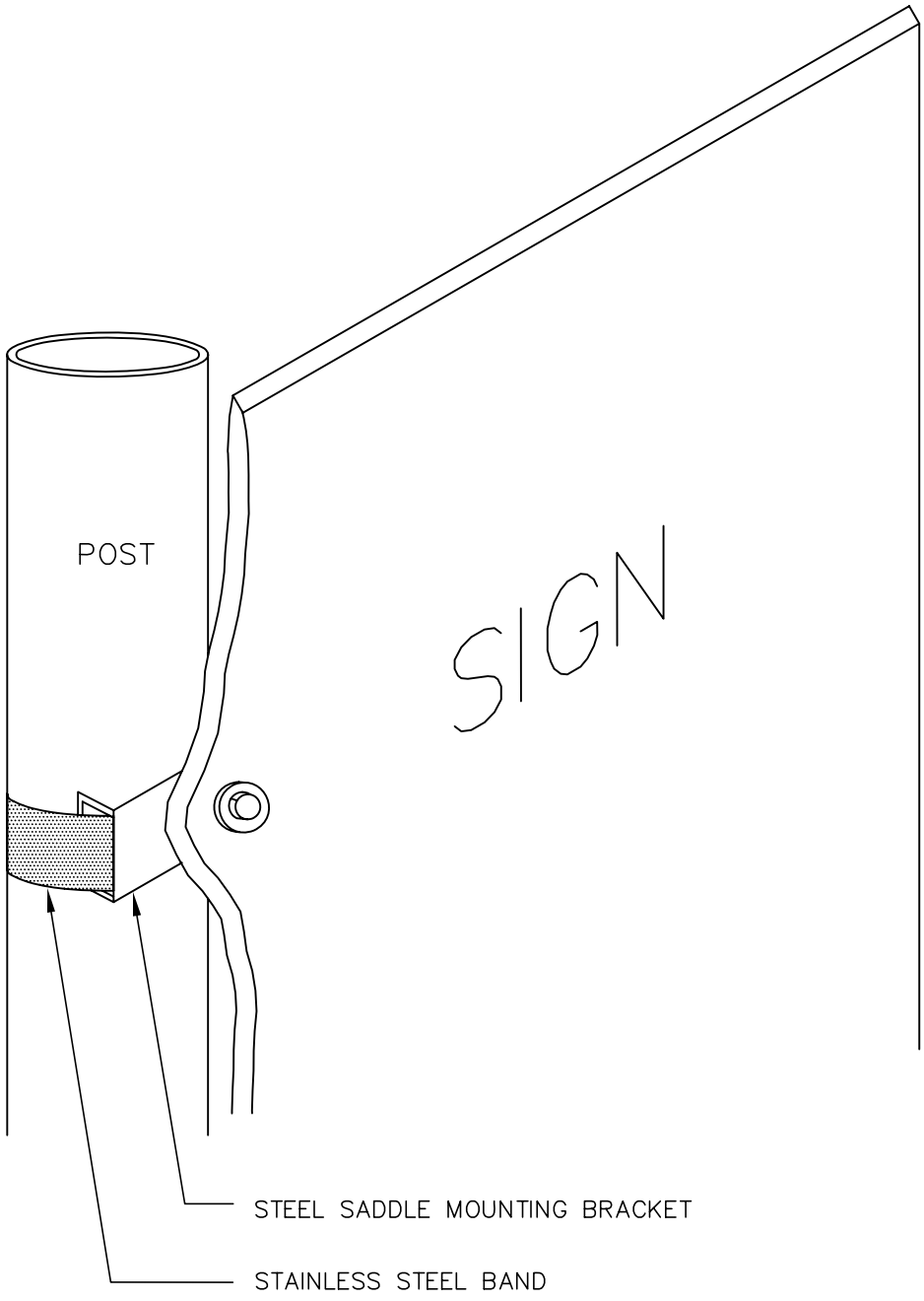

MUNICIPALITY OF ANCHORAGE	SCALE: NTS APPROVED: REVISED: 10/08	**SIGN ON ROUND POST**	SECTION # 70.11 DETAIL # 70–29

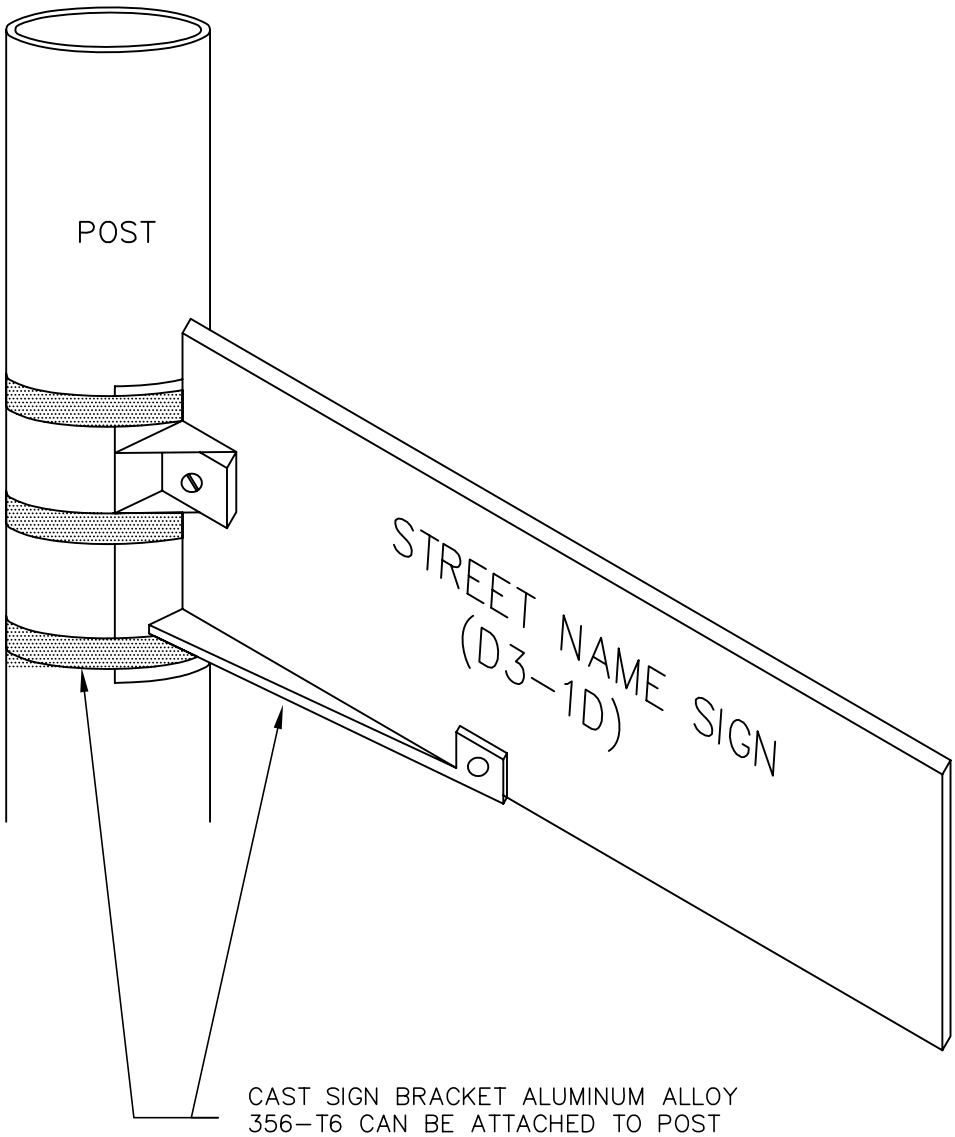

MUNICIPALITY OF ANCHORAGE	SCALE: NTS APPROVED: REVISED: 10/08	**STREET NAME ON ROUND POST**	SECTION # 70.11 DETAIL # 70-30

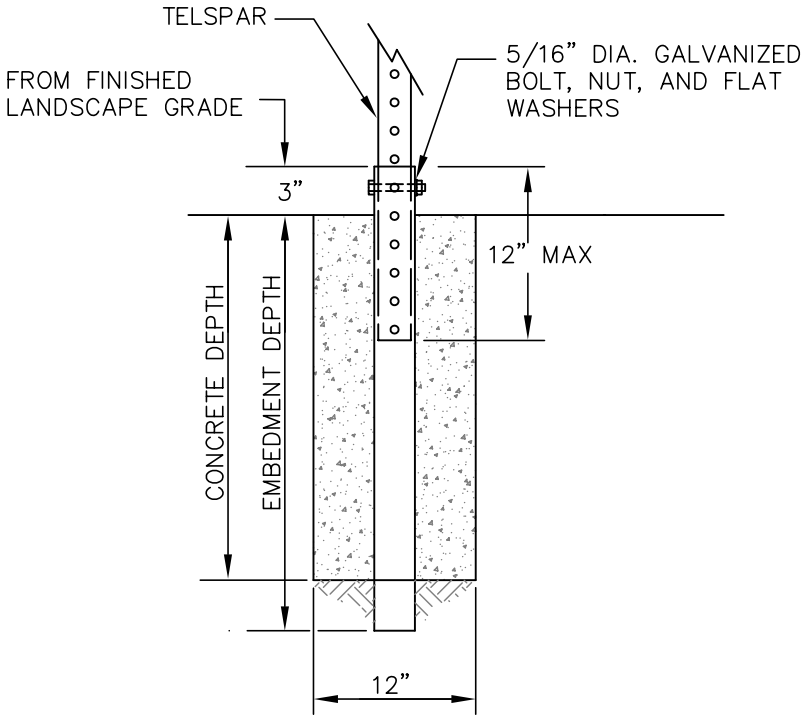

CONCRETE FOUNDATION FOR SIGN POST CURB INLET FRAME

PERFORATED STEEL TUBES (P.S.T.) (12ga. – .105" Wall Thickness)			
SIGN SURFACE AREA SQ. FT.	POST SIZE	EMBEDMENT DEPTH	CONCRETE DEPTH
7' OR LESS	2" X 2"	27"	24"
GREATER THAN 7'	2 ½" X 2 ½ "	33"	30"

MUNICIPALITY OF ANCHORAGE	SCALE: NTS APPROVED: REVISED: 10/08	CONCRETE FOUNDATION FOR SIGN POST	SECTION # 70.11 DETAIL # 70–31

RIVET DETAIL ELEVATION VIEW

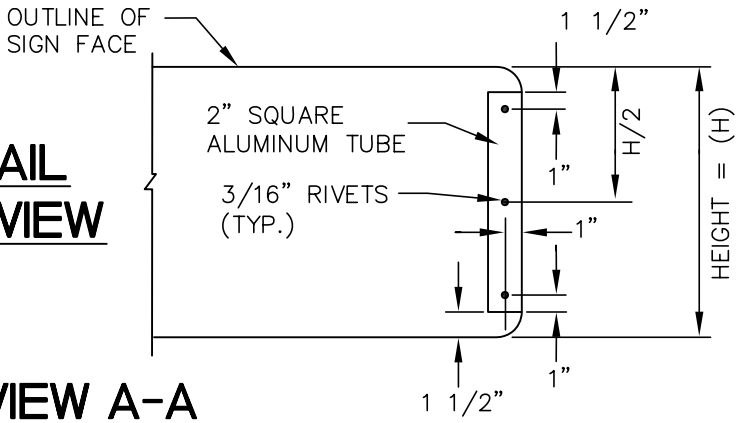

VIEW A-A

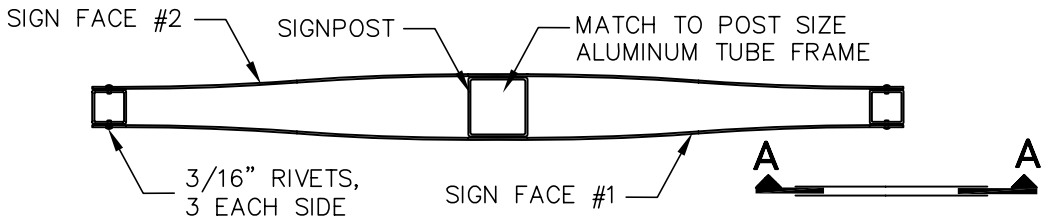

PLAN VIEW

12" SIGNS/PLATES 36" OR GREATER IN LENGTH BRACING DETAIL

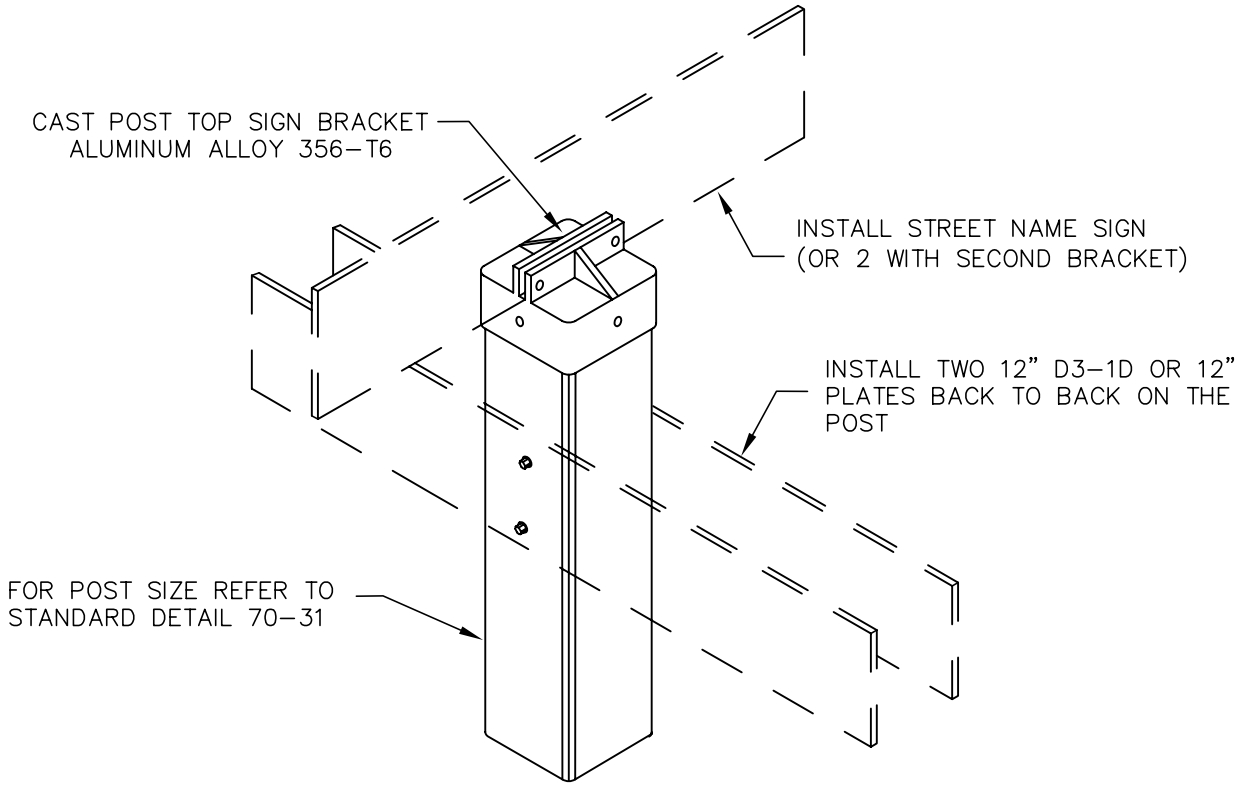

MUNICIPALITY OF ANCHORAGE	SCALE: NTS APPROVED: REVISED: 10/08	**12" PLATE INSTALLATION DETAIL WITH SUPPLEMENTAL 8" D3-1D SIGNS**	SECTION # 70.11 DETAIL # 70-32

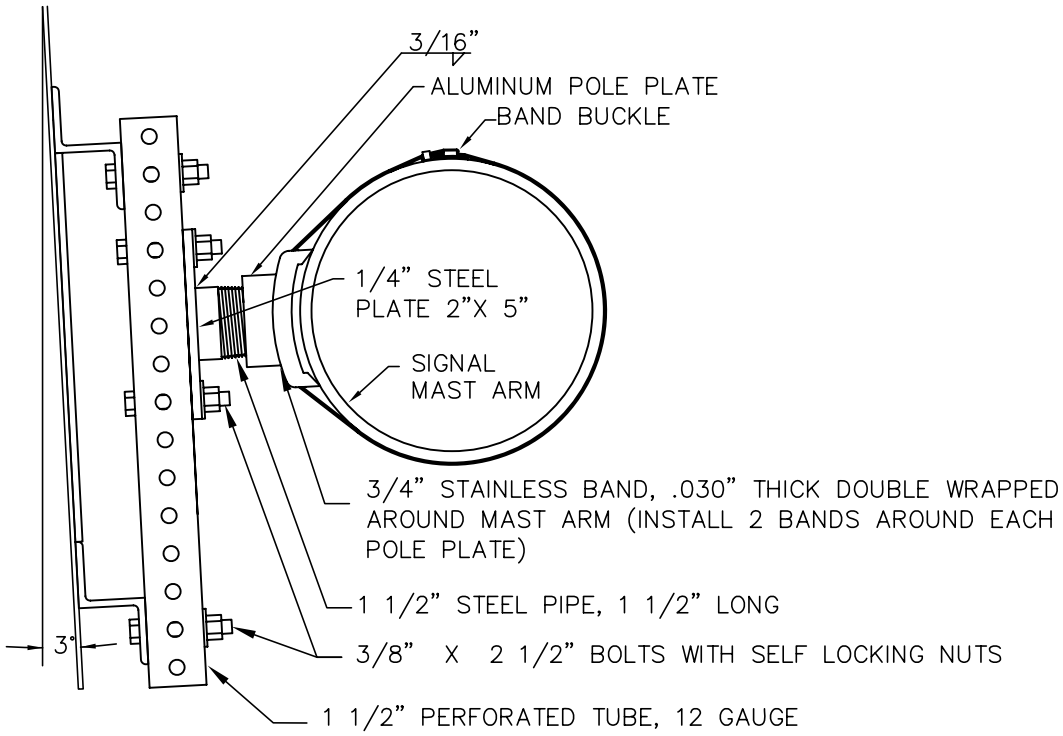

MUNICIPALITY OF ANCHORAGE	SCALE: NTS APPROVED: REVISED: 10/08	**SIGNAL POLE MAST ARM SIGN MOUNTING**	SECTION # 70.11 DETAIL # 70–33

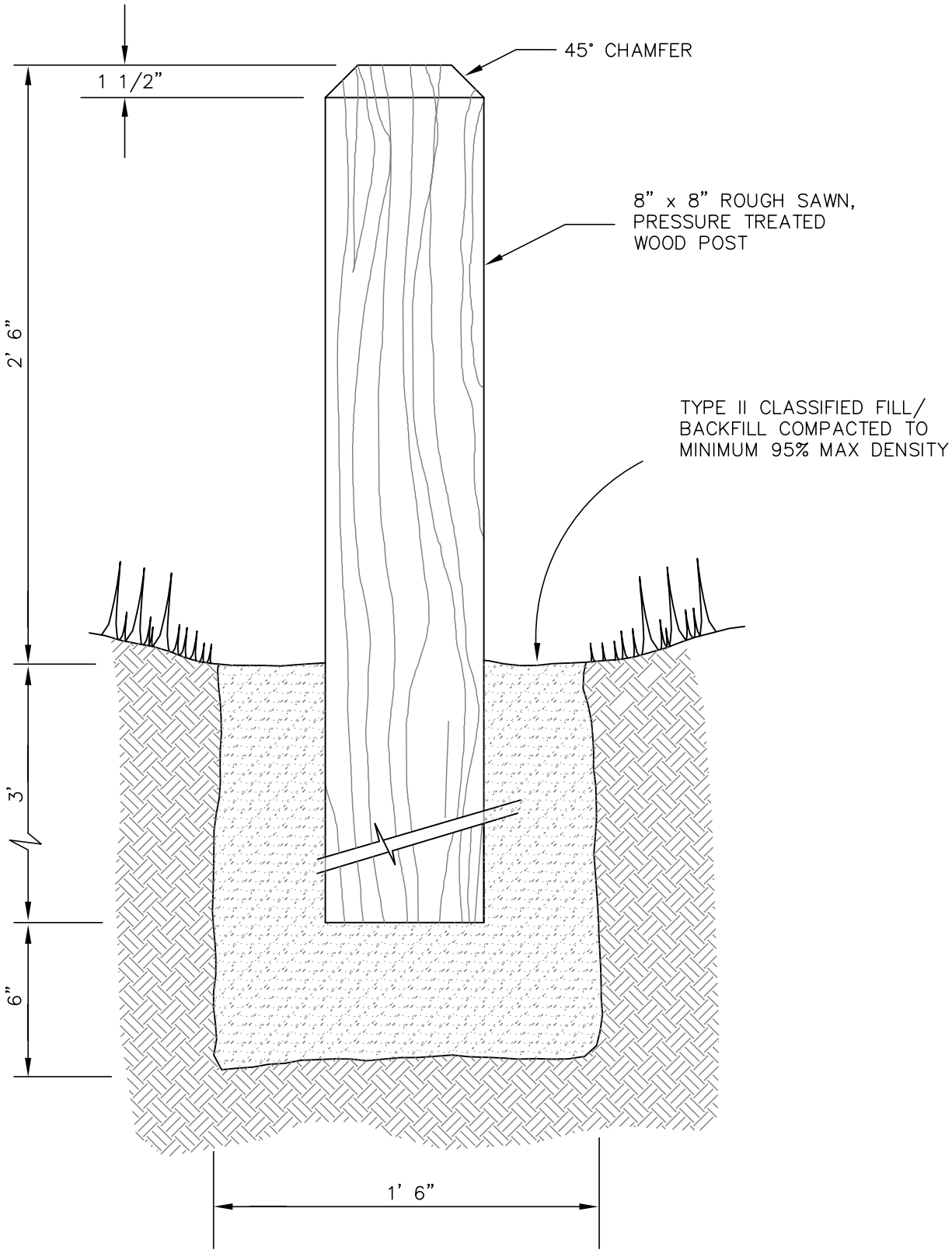

MUNICIPALITY OF ANCHORAGE	SCALE: NTS APPROVED: REVISED: 10/08	# WOOD BOLLARD	SECTION # 70.13 DETAIL # 70–34

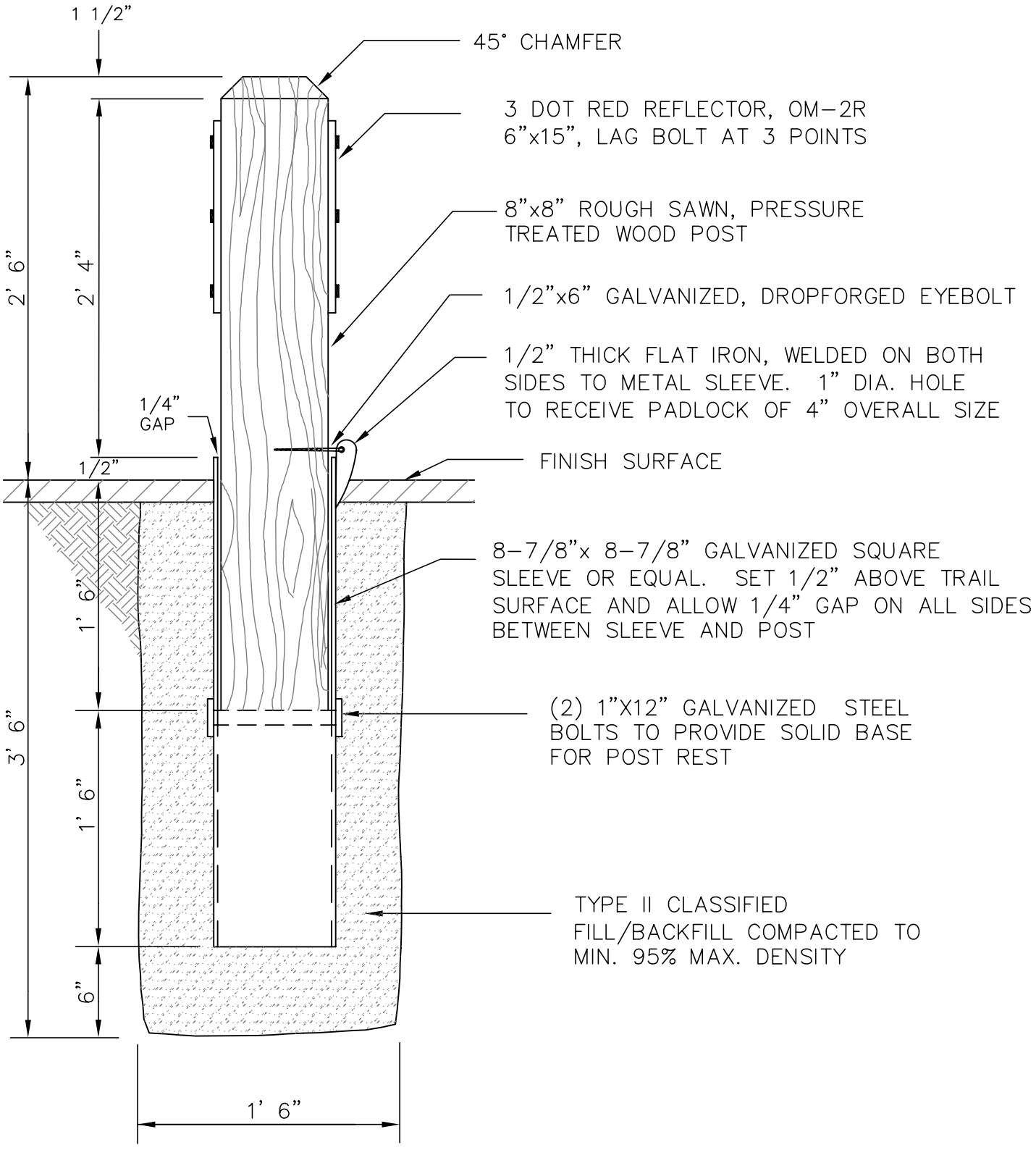

NOTES
1. LOCATE PADLOCK AWAY FROM TRAFFIC FLOW.

MUNICIPALITY OF ANCHORAGE	SCALE: NTS APPROVED: REVISED: 10/08	**REMOVABLE WOOD BOLLARD**	SECTION # 70.13 DETAIL # 70-35

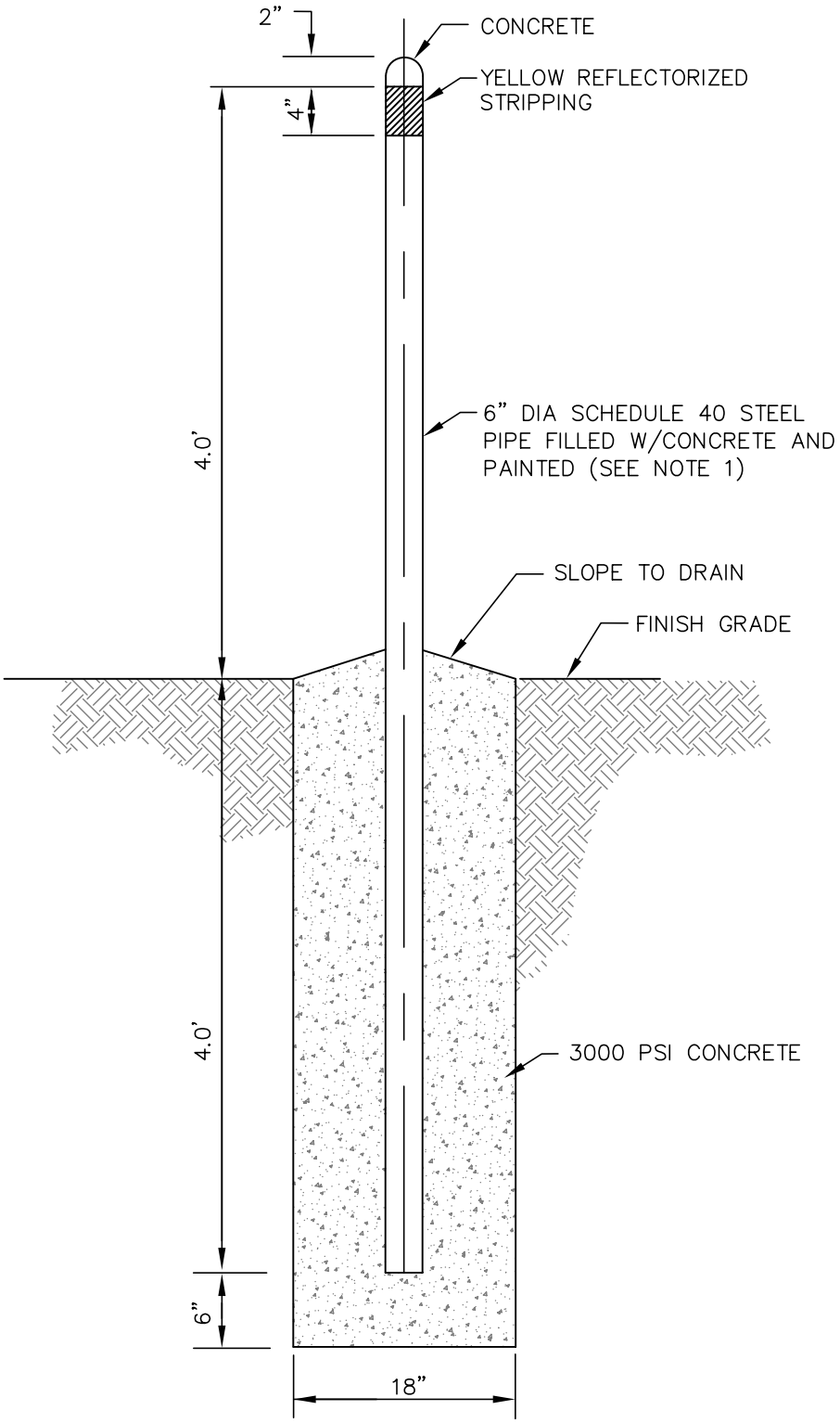

NOTES:

1. POSTS SHALL BE PRIMED AND RECEIVE TWO COATS MINIMUM OF DARK GREEN POWDER COAT PAINT I.A.W. MANUFACTURER'S RECOMMENDATIONS. TOPCOAT WITH TWO COATS YELLOW CARBOLINE 139 UNLESS GUARD POST COVER OR SLEEVE IS INSTALLED.

MUNICIPALITY OF ANCHORAGE	SCALE: NTS APPROVED: REVISED: 10/08	STEEL BOLLARD	SECTION # 70.13 DETAIL # 70–36

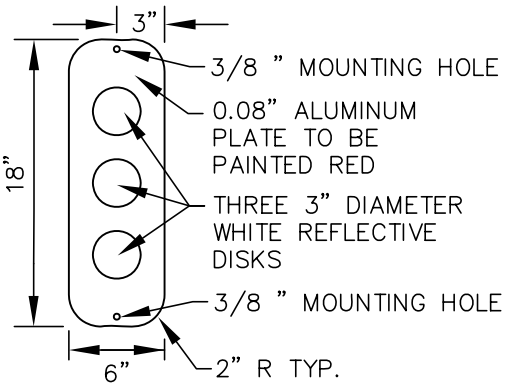

REFLECTOR PLATE

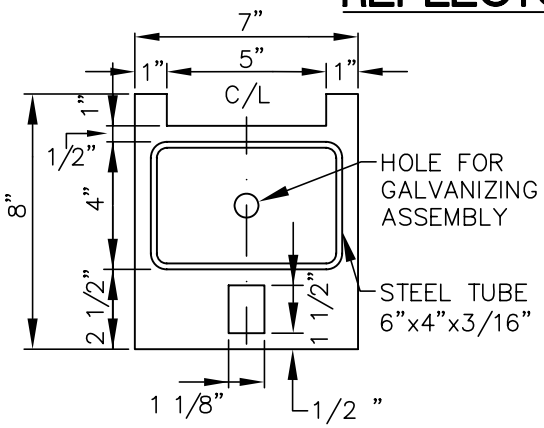

POST BASE PLATE

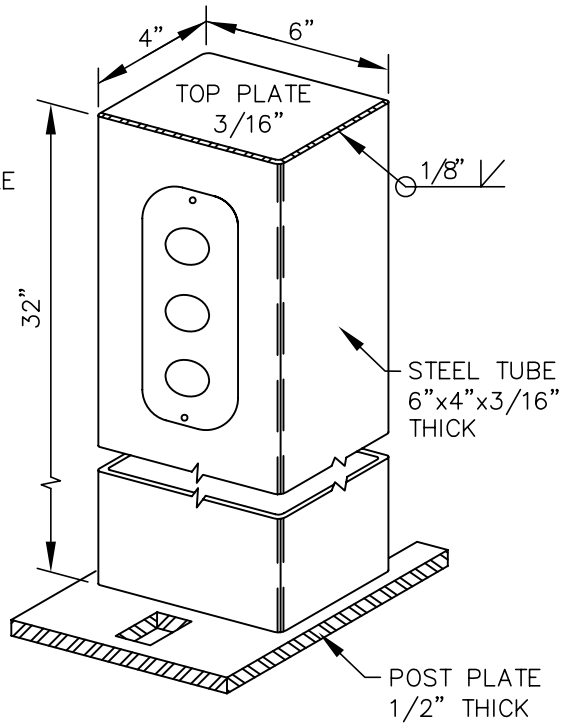

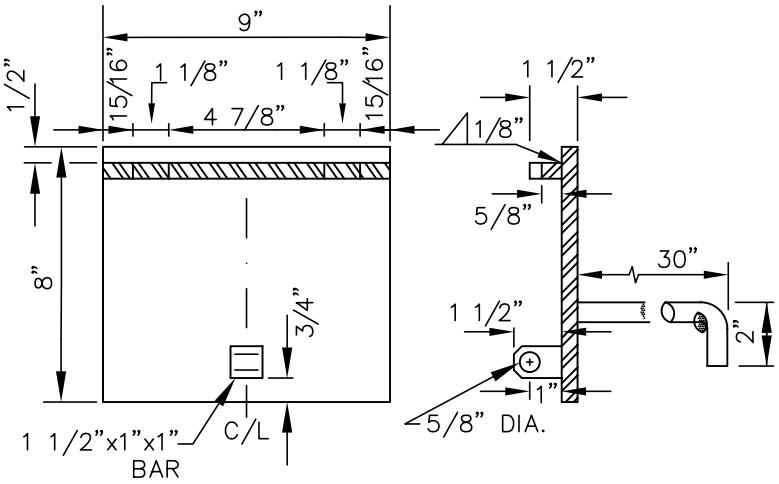

GROUND BASE PLATE

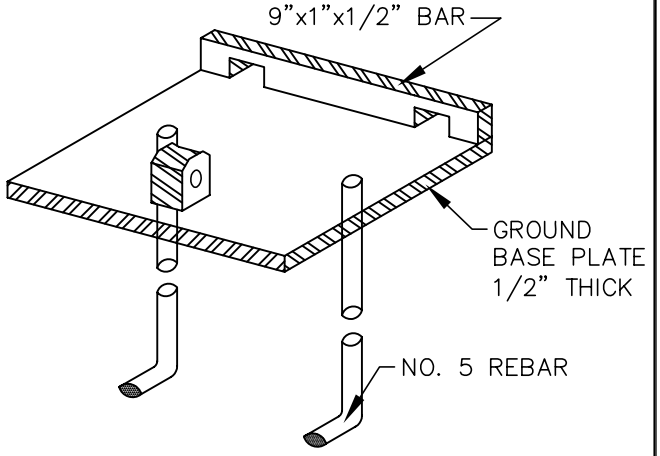

ISOMETRIC VIEW

NOTES:

1. ALL WELDS, UNLESS OTHERWISE SHOWN, SHALL BE THREE–SIXTEENTH INCH (3/16") FILLET – ALL AROUND.
2. CAST IN PLACE WITH CLASS 'A' CONCRETE IN A TWELVE INCH DIAMETER BY THIRTY SIX INCH (12" X 36") FOUNDATION TUBE.
3. REMOVABLE BOLLARDS ARE TO HAVE ADHESIVE REFLECTORS ON BOTH FRONT AND BACK OF POST.
4. ALL EXTERIOR CORNERS AND EDGES SHALL BE ROUNDED TO PROVIDE A PROJECTION FREE SURFACE.

MUNICIPALITY OF ANCHORAGE	SCALE: NTS APPROVED: REVISED: 10/08	REMOVABLE BOLLARD (RECTANGULAR)	SECTION # 70.13 DETAIL # 70–37

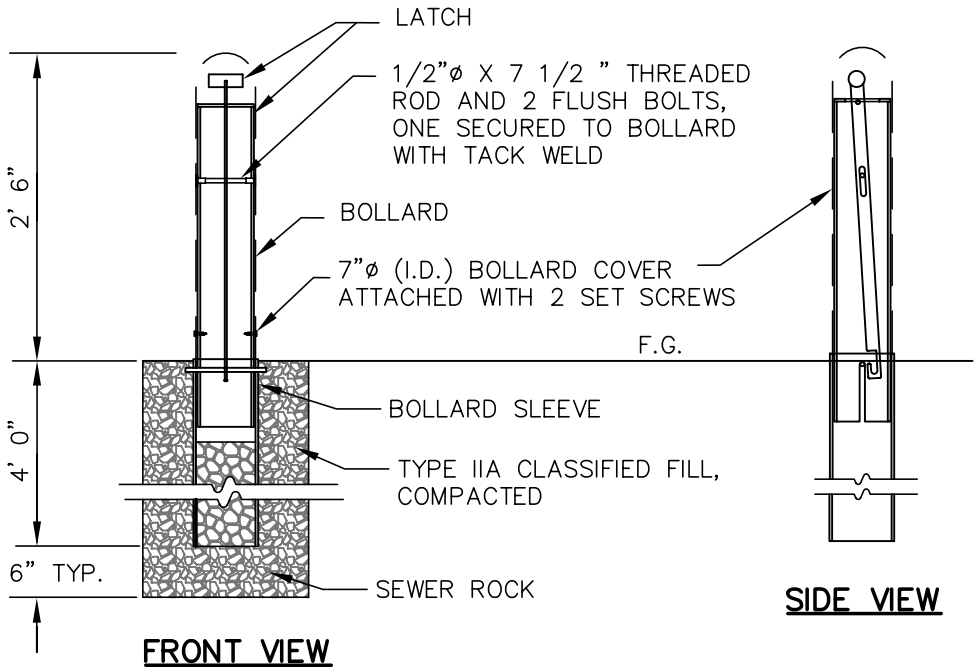

NOTE: ALL FINAL FABRICATIONS TO BE GALVANIZED PRIOR TO ASSEMBLY

REMOVABLE BOLLARD ASSEMBLY

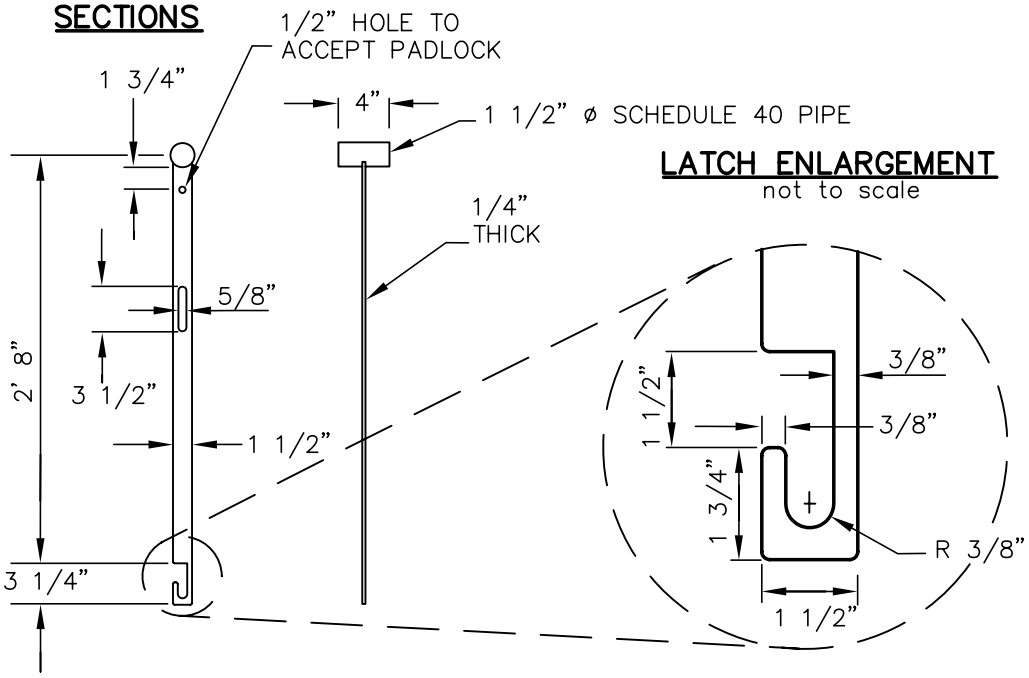

LATCH

MUNICIPALITY OF ANCHORAGE	SCALE: NTS APPROVED: REVISED: 10/08	**REMOVABLE BOLLARD (ROUND)** SHEET 1 OF 2	SECTION # 70.10 DETAIL # 70–38.1

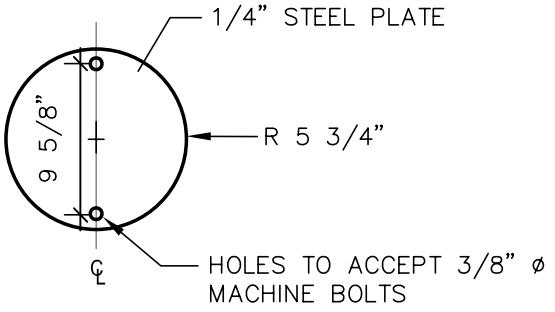

NOTE: PROVIDE 1 TEMPORARY CAP PER REMOVABLE BOLLARD TO OWNER.

REMOVABLE BOLLARD TEMPORARY CAP

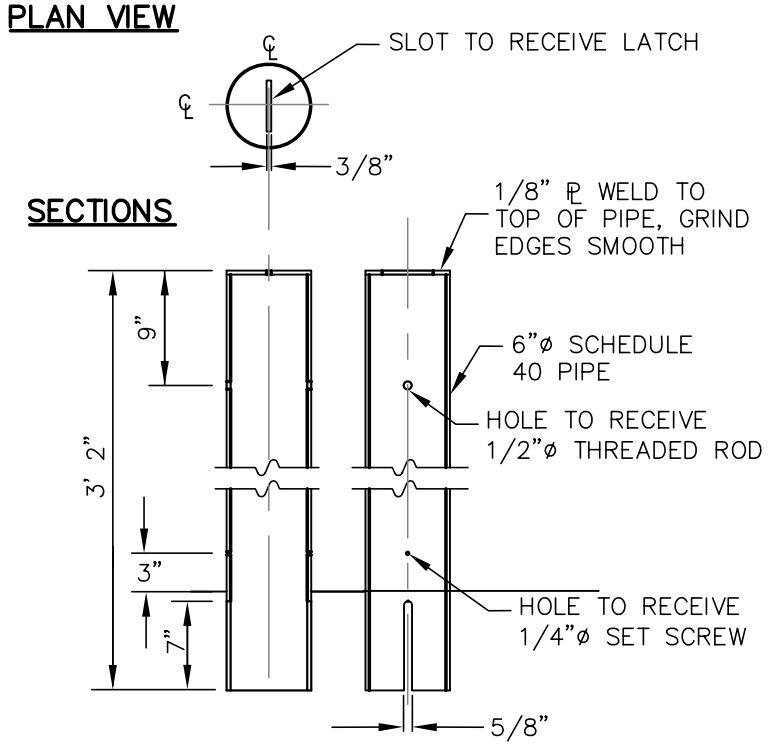

BOLLARD

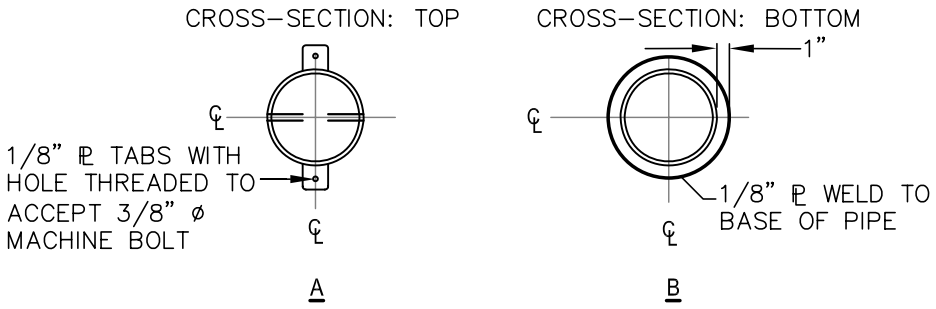

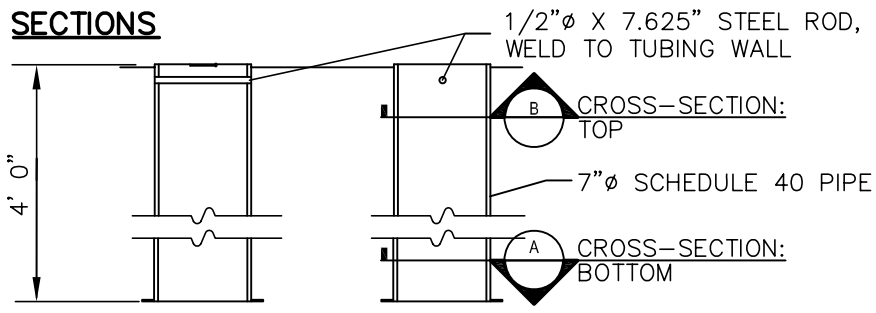

NOTE: SET SLEEVE 1/8"ABOVE ADJACENT SURFACE

BOLLARD SLEEVE

MUNICIPALITY OF ANCHORAGE	SCALE: NTS APPROVED: REVISED: 10/08	**REMOVABLE BOLLARD (ROUND)** SHEET 2 OF 2	SECTION # 70.10 DETAIL # 70-38.2

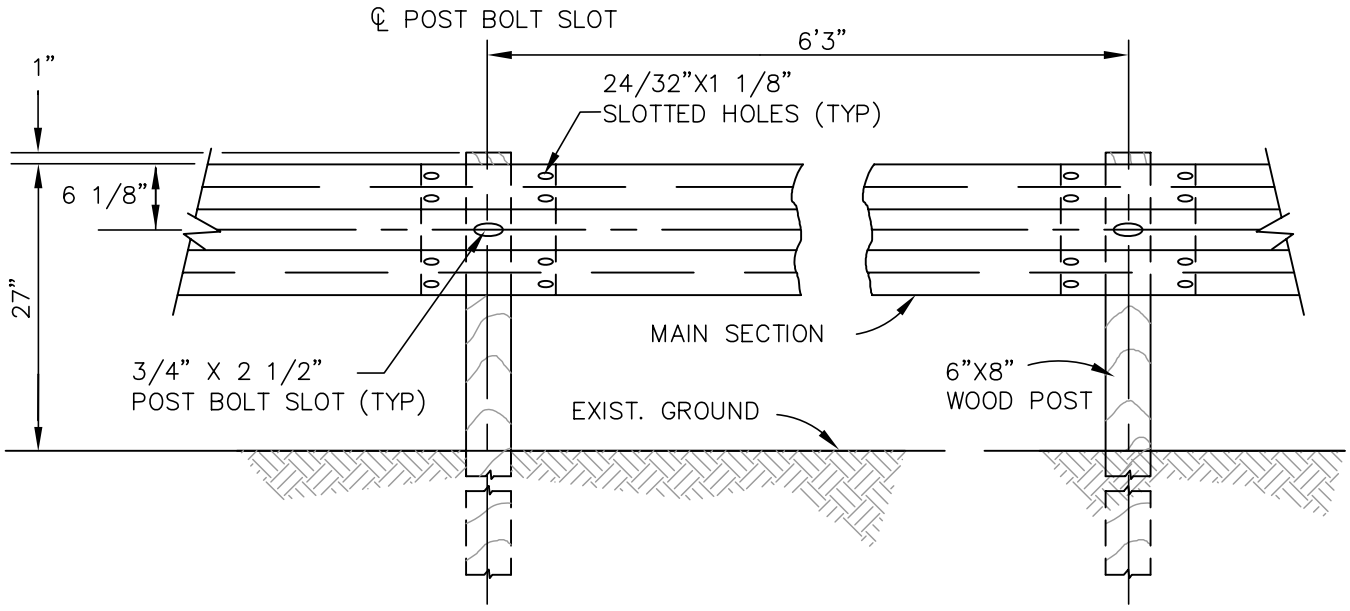

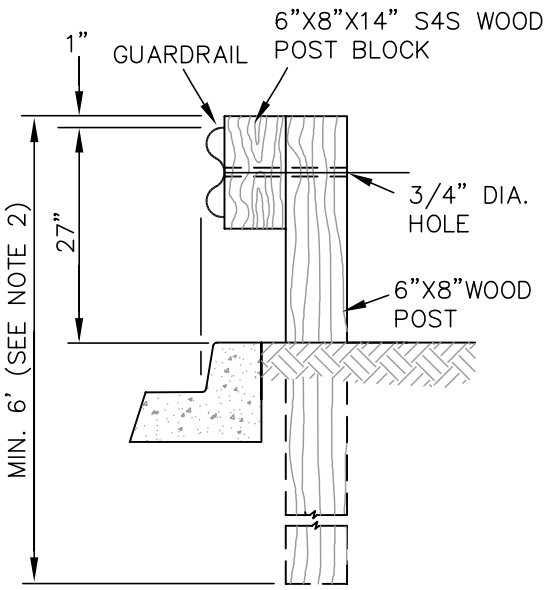

WOOD POST

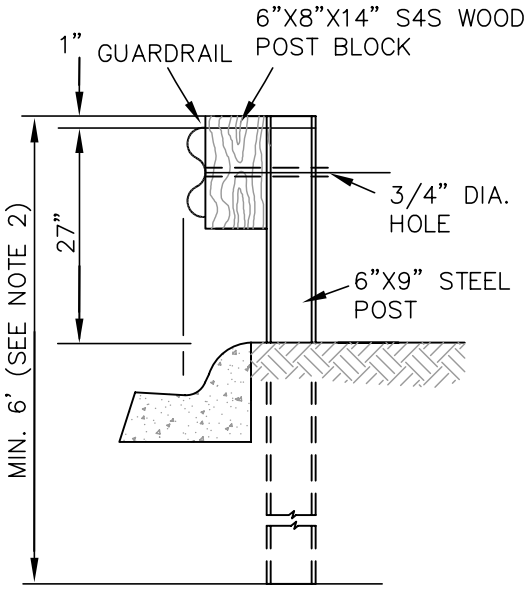

STEEL POST

NOTES:

1. PROVIDE GUARD RAIL OF TYPE AND GAUGE SPECIFIED IN THE CONTRACT DOCUMENTS.
2. WHEN INFORMATION IS NOT INCLUDED IN THE CONTRACT DOCUMENTS, SEE ADOT&PF STANDARD DRAWING G–10 FOR GUARDRAIL POST LENGTHS CORRESPONDING TO COMBINATIONS OF SLOPE AND BEHIND–POST EMBANKMENT WIDTHS.
3. END TREATMENTS SHALL BE CONSTRUCTED AS SHOWN ON DRAWINGS.

REVISION: 2/10 WOOD BLOCK INSTEAD OF STEEL ON STEEL POST TO MEET TL–3; MOVED FACE OF GUARDRAIL TO FACE OF CURB; REMOVED END TREATMENT LANGUAGE

MUNICIPALITY OF ANCHORAGE	SCALE: NTS APPROVED: REVISED: 2/10	GUARD RAIL DETAIL	SECTION # 70.15 DETAIL # 70–39

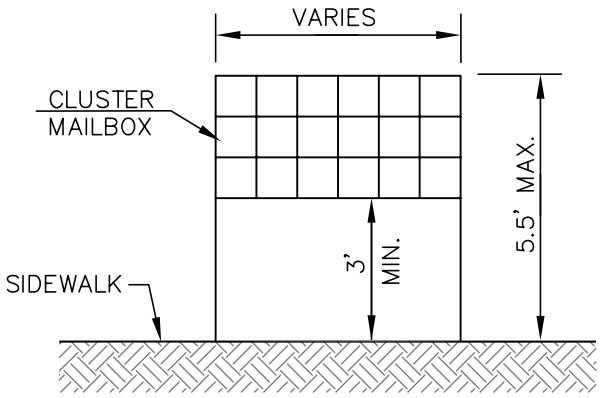

FRONT VIEW

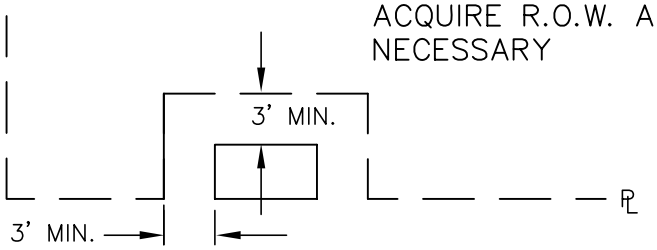

REQUIRED R.O.W.

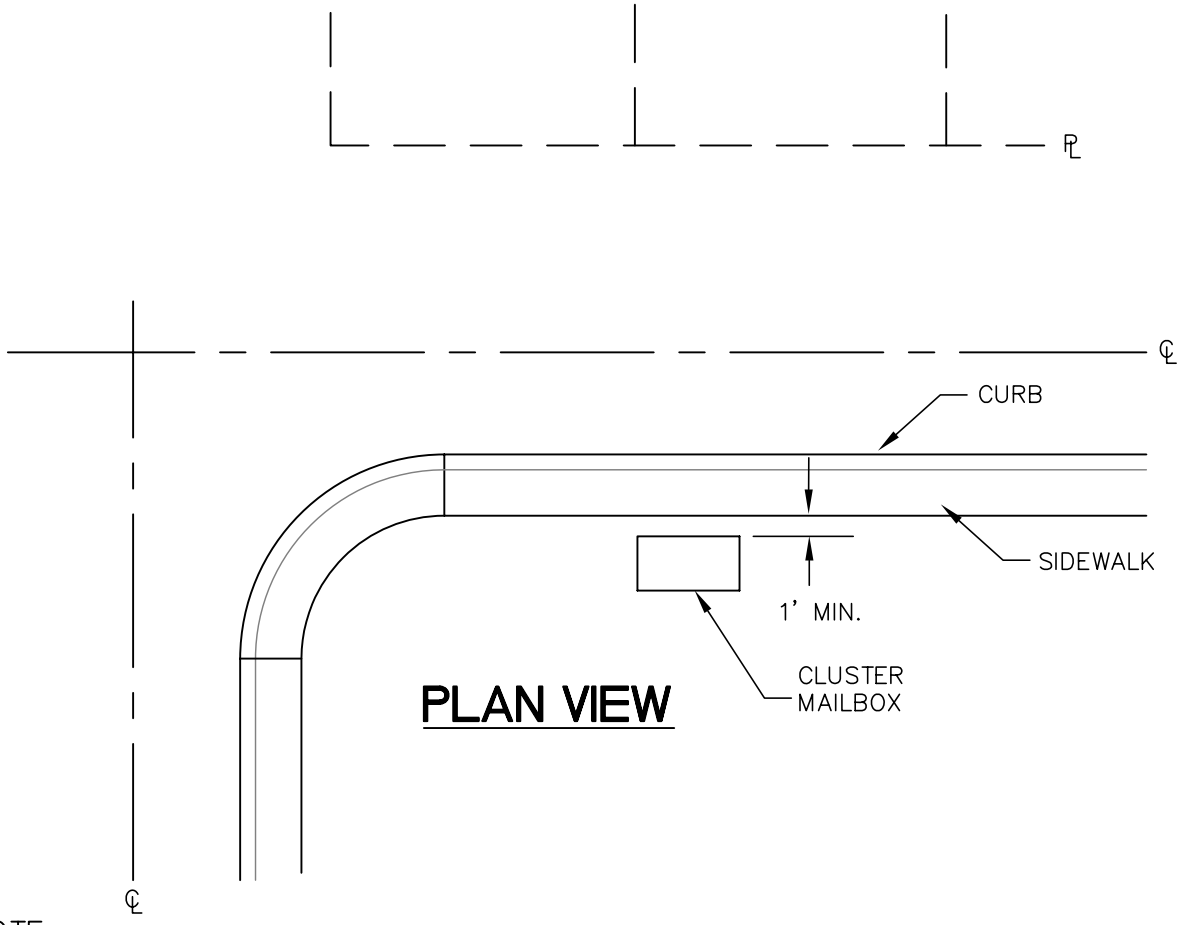

PLAN VIEW

NOTE:

1. COORDINATE WITH LOCAL POSTAL AUTHORITIES TO DETERMINE LOCATIONS OF CLUSTER MAILBOXES. IF CLUSTERING OR SPECIAL LOCATIONS ARE SPECIFIED, PROVISIONS SHALL BE INCLUDED IN THE CONTRACT DOCUMENTS.

MUNICIPALITY OF ANCHORAGE	SCALE: NTS APPROVED: REVISED: 10/08	CLUSTER MAILBOX LOCATION	SECTION # 70.16, 17 DETAIL # 70–40

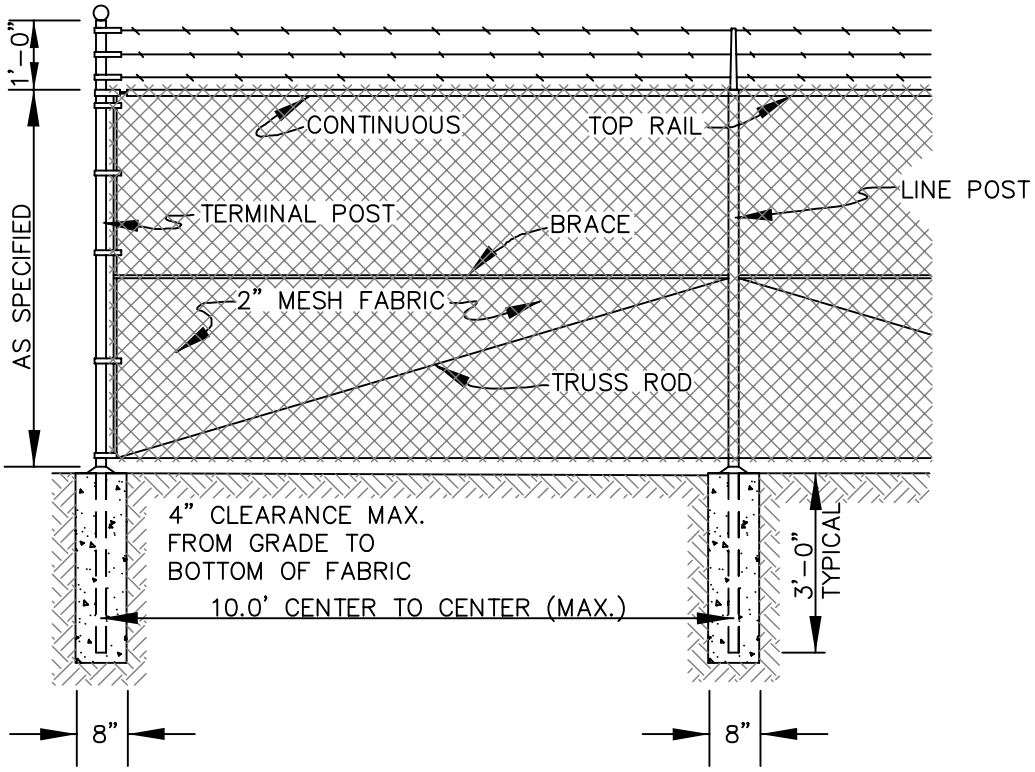

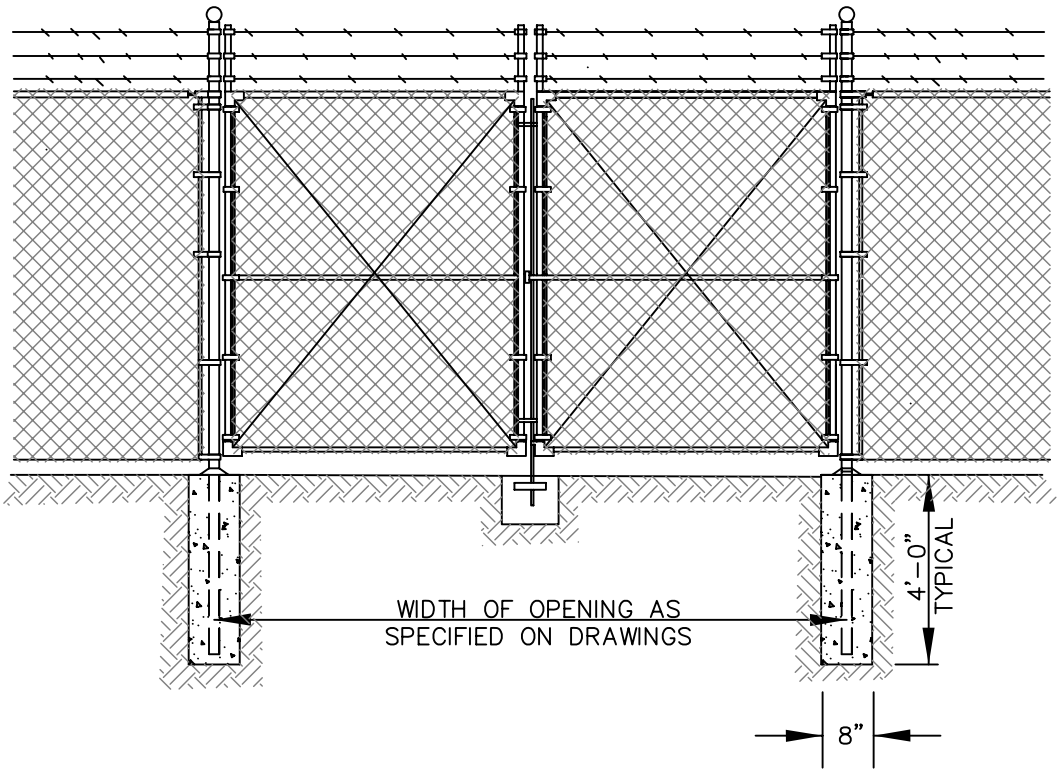

NOTES:

1. GAUGE OF FABRIC AS SPECIFIED ON DRAWINGS.
2. SIZE OF TUBULAR STEEL FOR GATE FRAMES IS SPECIFIED IN SECTION 70.18 – CHAIN LINK FENCES.

MUNICIPALITY OF ANCHORAGE	SCALE: NTS APPROVED: REVISED: 10/08	**FENCE DETAILS**	SECTION # 70.18 DETAIL # 70–41

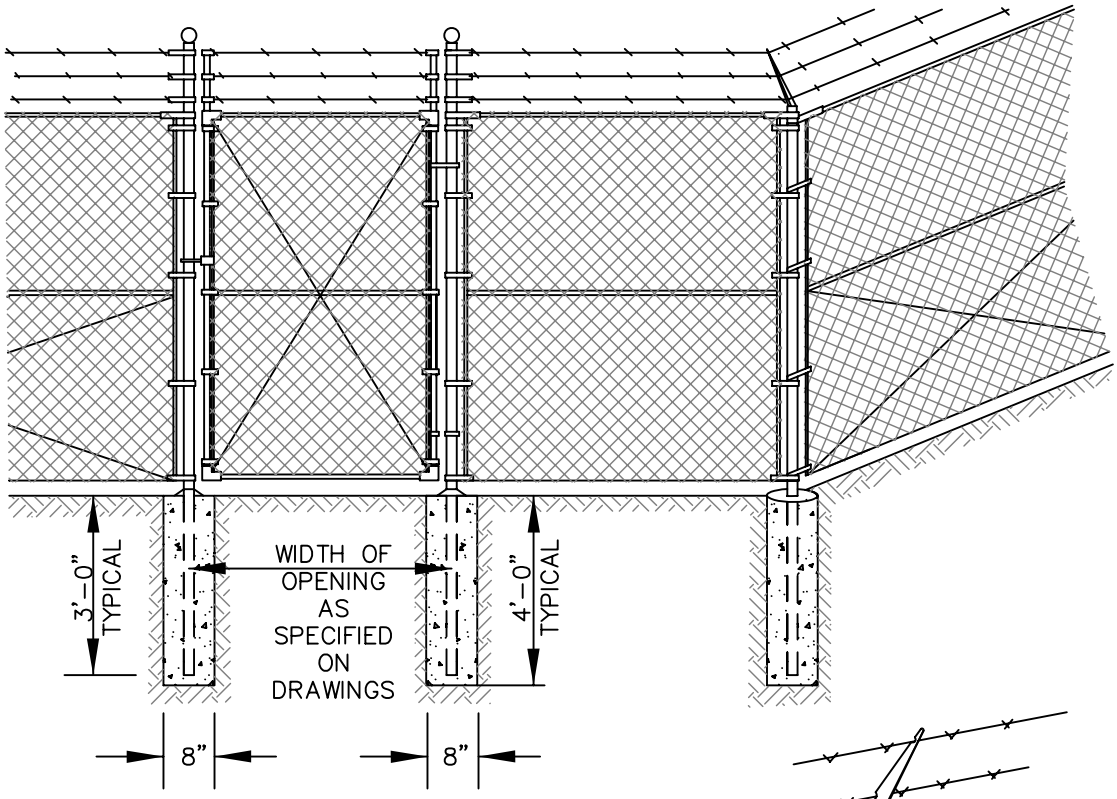

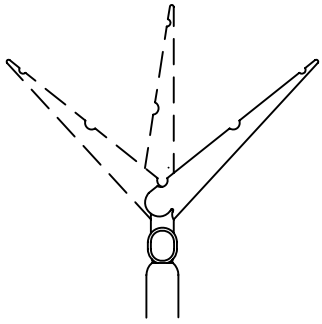

H-H EYETOP LINETOP FITTING

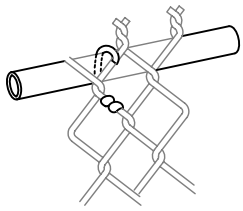

METHOD OF TYING FABRIC TO TOP RAIL

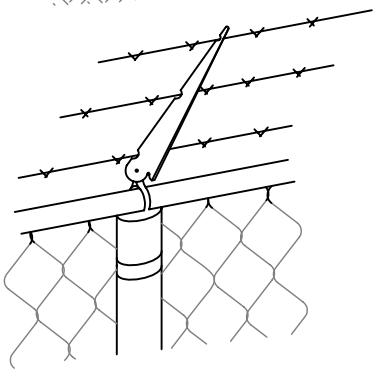

TOP FINISH OF STEEL GUARD POST

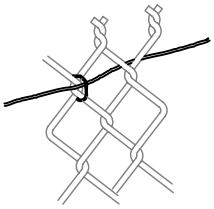

METHOD OF TYING FABRIC TO COIL SPRING TENSION WIRE

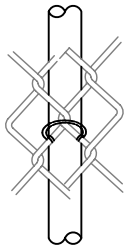

METHOD OF TYING FABRIC TO TUBULAR POST

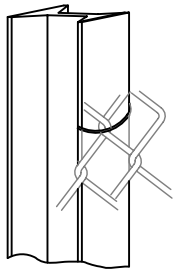

METHOD OF TYING FABRIC TO H-POST

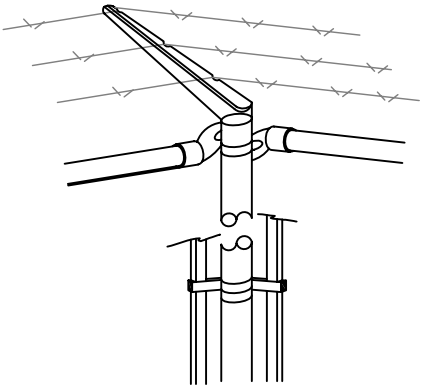

CORNER POST CONNECTION

NOTE:

1. SIZE OF TUBULAR STEEL FOR GATES IS SPECIFIED IN SECTION 70.18 – CHAIN LINK FENCES.

MUNICIPALITY OF ANCHORAGE	SCALE: NTS APPROVED: REVISED: 10/08	FENCE DETAILS	SECTION # 70.18 DETAIL # 70-42

MUNICIPALITY OF ANCHORAGE
STANDARD SPECIFICATIONS

DIVISION 75
LANDSCAPING IMPROVEMENTS

STANDARD CONSTRUCTION SPECIFICATIONS
LANDSCAPING IMPROVEMENTS
DIVISION 75
INDEX

SECTION 75.01	GENERAL	1
Article 1.1	Scope of Work	1
Article 1.2	Glossary of Terms	1
Article 1.3	Payment - General	1
SECTION 75.02	LANDSCAPING	2
Article 2.1	General	2
Article 2.2	Materials	3
Article 2.3	Construction	8
Article 2.4	Maintenance	13
Article 2.5	Final Acceptance	16
Article 2.6	Measurement	17
Article 2.7	Basis of Payment	17
SECTION 75.03	TOPSOIL	18
Article 3.1	General	18
Article 3.2	Materials	18
Article 3.3	Placing	19
Article 3.4	Measurement	20
Article 3.5	Basis of Payment	20
SECTION 75.04	SEEDING	21
Article 4.1	General	21
Article 4.2	Materials	21
Article 4.3	Application	24
Article 4.4	Maintenance	26
Article 4.5	Measurement	26
Article 4.6	Basis of Payment	27
SECTION 75.05	SOD	28
Article 5.1	General	28
Article 5.2	Materials	28
Article 5.3	Construction	28
Article 5.4	Maintenance	30
Article 5.5	Measurement	30
Article 5.6	Basis of Payment	31

SECTION 75.06 LANDSCAPE EDGING 32
Article 6.1 General 32
Article 6.2 Materials 32
Article 6.3 Construction 32
Article 6.4 Measurement 32
Article 6.5 Basis of Payment 32

SECTION 75.07 LANDSCAPE FABRIC 33
Article 7.1 General 33
Article 7.2 Materials 33
Article 7.3 Construction 33
Article 7.4 Measurement 33
Article 7.5 Basis of Payment 33

SECTION 75.08 WILLOW STAKING 34
Article 8.1 General 34
Article 8.2 Materials 34
Article 8.3 Construction 34
Article 8.4 Maintenance 36
Article 8.5 Final Maintenance Acceptance 37
Article 8.6 Measurement 37
Article 8.7 Basis of Payment 38

SECTION 75.09 SITE FURNISHINGS 39
Article 9.1 General 39
Article 9.2 Materials 39
Article 9.3 Construction 39
Article 9.4 Method of Measurement 40
Article 9.5 Basis of Payment 40

Section 75.10 MODULAR CONCRETE BLOCK WALL 41
Article 10.1 Description 41
Article 10.2 Materials 41
Article 10.3 Manufacturer and Local Representative 41
Article 10.4 Construction 41
Article 10.5 Method of Measurement 42
Article 10.6 Basis of Payment 42

SECTION 75.11 BOULDERS 43
Article 11.1 General 43
Article 11.2 Materials 43
Article 11.3 Construction 43
Article 11.4 Method of Measurement 43
Article 11.5 Basis of Payment 43

STANDARD CONSTRUCTION SPECIFICATIONS FOR LANDSCAPING IMPROVEMENTS DIVISION 75

SECTION 75.01 GENERAL

Article 1.1 Scope of Work

The Work covered by these Specifications consists of providing all plants, labor, equipment, supplies, material, transportation, handling and storage, and performing all operations in connection with the construction of the landscaping improvements as provided for in this Division.

Article 1.2 Glossary of Terms

Reference the following for terminology

Appendix A. - *American National Standards for Nursery Stock*, *ANSI Z60.1*, latest edition. American Nursery and Landscape Association, 1250 I Street N.W., Suite 500, Washington, D.C., 20005.

Plant Establishment Period – From Acceptance of Initial Planting Operations the Contractor shall be responsible for maintaining the accepted plantings for one year. During the Plant Establishment Period, the Contractor shall also, upon receipt of written notification by the Engineer, repair or replace damaged trees, shrubs, and perennials. If trees or shrubs are replaced within the last 60 days of the Plant Establishment Period, the Plant Establishment Period shall be extended an additional 60 days.

Propagule – A structure with the capacity to give rise to a new plant, for example a seed, a spore, or a part of the vegetative body capable of independent growth if detached from the parent.

Article 1.3 Payment - General

Payment for all Work (including the Plant Establishment Period) included in this Division shall be paid for in accordance with the Division 10, Section 10.07 - Measurement and Payment, and shall include full payment for all Work described.

SECTION 75.02 LANDSCAPING

Article 2.1 General

A. Scope of Work

The work under this Section consists of providing all operations pertaining to the planting and maintenance of trees, shrubs, ground cover, perennials and annuals. The Work shall also include all operations pertaining to removing and replacing trees and protecting existing trees in place.

B. Agency Standards: Nomenclature

All operations shall meet industry consensus on the planting and care operations and all plant materials used shall be true to name and size in conformity with the following standards:

1. *American Standard for Nursery Stock*, ANSI Z60.1 American Nursery and Landscape Association, Washington, D.C., latest edition.

2. *Sunset New Western Garden Book*, Lane Publishing Company, Menlo Park, California, latest edition.

3. *Landscape Plants for Alaska*, University of Alaska Fairbanks Cooperative Extension Publication, latest edition.

4. *ANSI Standard A300 – American National Standards for Tree Care Operations – Tree, Shrub, and other Woody Plant Maintenance – Standard Practices*. American National Standards Institute, New York, New York, latest edition.

5. *ANSI Standard Z133 – Safety Requirements for Arboriculture American National Standard for Tree Care Operations*. American National Standards Institute, New York, New York.

6. *Manual of Woody Landscape Plants*, Michael A. Dirr, Stipes Publishing, LLC, 5th Edition, Champaign, Illinois.

C. Definition

The term "planting areas" as used in this Specification, shall mean all areas to be planted with trees, shrubs, ground cover, annuals, perennials, bulbs, native plant materials and/or seeded areas.

Article 2.2 Materials

A. Plant Materials

1. Plant Schedule

A complete schedule of plants, including names, quantities, sizes, and other requirements, is shown on the Landscape Drawings. The Contractor shall furnish a report listing the proposed sources of the plants and location grown. In the event of plant count discrepancy between the Plant Schedule and the plants counted on the Drawings, the Drawings shall prevail. Discrepancies between the quantity shown on the Plant Schedule and those required by the Drawing shall not entitle the Contractor to claim any additional compensation, nor relieve him of the obligation to complete the Work shown on the Drawings.

No substitutes shall be accepted, except with the written permission of the Engineer. The Contractor shall submit all substitution requests, noting the source of plants, location, size, and condition, within thirty (30) days of receiving the Notice to Proceed. Substitutes shall be inspected by the Engineer prior to installation.

Each plant shall have a durable legible label with plant size and name (genus, species, variety, cultivar) securely attached when delivered and in place until after acceptance. Labels shall not girdle or damage plants. Contractor shall remove label from plant material at time of acceptance.

2. Plant Quality

a. Species and Culture

All plants shall be true to species and variety specified and in accordance with the American Standard for Nursery Stock and good horticultural practices.

Plants shall be so trained in development and appearance as to be compact and symmetrical. They shall be sound, healthy, vigorous, well-branched, and densely foliated when in leaf. Plants shall be free of disease and insect adults, eggs, pupa, or larvae. They shall have healthy, well developed root systems and shall be free from physical damage or other conditions that would prevent growth.

All plant material shall be free of contamination by any plant not specified, including non-native invasive plants, seeds, and plant parts.

b. Tree Trunk Specifications

Tree trunks shall be straight and well-tapered. Trees with multiple leaders, unless specified, will be rejected. Damaged, cut, or crooked leaders; included bark, bark abrasions, sunscald, disfiguring knots, mold, and prematurely opened buds, or cut limbs over three-quarter inch (3/4") diameter that are not completely callused are cause for rejection.

Trunk diameter and taper shall be sufficient so that tree remains vertical without support.

c. Crown Configuration Specification

Crown ratio (distance from bottom of canopy to tree top/tree height) should be at least sixty-six percent (66%) of total tree height.

One-half (1/2) or more of the foliage should be on branches originating on the lower two-thirds (2/3) of the trunk, and one-half (1/2) or less should originate on the upper one third (1/3).

Where formal arrangements of consecutive order of trees are shown, select stock for uniform height, structure, and spread.

d. Branch Specifications

All branches shall be less than two thirds (2/3) the diameter of the trunk measured one inch (1") above the branch.

The attachment of branches shall contain no bark inclusions.

There shall be one dominant leader straight to the top of the tree. Larger branches shall be spaced at least six inches (6") apart and arranged radially and vertically along the stem.

There shall be live buds or foliage to the ends of all twigs.

All pruning cuts shall comply with ANSI A300 Standards and shall be made outside the branch collar and branch bark ridge. Branches shall not be pruned immediately prior to delivery. Needled evergreens shall not have been sheared.

e. Root Flare and Root Ball Specifications

No root in the root ball larger than one-quarter inch (1/4") diameter shall circle more than one-third around the root ball. There shall be no roots in the root ball that make an abrupt turn of ninety degrees (90°) or more. There shall be no roots in the root ball that are 'J' roots, kinked, stem girdling, or potentially stem girdling. For all plants, including bare root, roots shall exhibit healthy, well-branched root systems characteristic of the species with adequate spread.

Roots in ball-in-burlap root balls or in containers shall be well-rooted and uniform throughout soil mix or growth media. Roots shall not be pot bound.

Major roots shall be less than two inches (2") from the top of root flare. The root flare (trunk flare, root collar) shall be at the surface of the root ball (container media). As defined by ANSI Z60.1, root ball depth measurement is from the top of the ball, which in all cases shall begin at the root flare. Soil above the root flare shall not be included in ball depth measurement and should be removed.

Root ball size shall meet *ANSI Z60.1*.

Nursery Stock root balls shall be of sufficient depth to include absorbing roots. Balls shall be securely wrapped in burlap and tightly bound with rope or twine. Trees may be wire baskets lined with burlap and tightly bound with rope or twine. Balled-in-burlap plants with manufactured balls or container plants that are dry, cracked, or broken before the plant operation will be rejected.

The Engineer reserves the right to inspect root system of trees and shrubs and to reject any material found to be non-compliant.

3. Size and Grading Standards

Plants shall have a standard balance between height, crown spread, diameter and root ball size according to the ANSI Z60.1. All plants shall be typical of their species or variety.

Plants shall conform to the measurements specified except that plants larger than those specified may be used, if approved by the Engineer. If larger plants are approved, the root ball, root spread, or container shall be increased in proportion of the size of the plant.

Caliper measurements shall be taken six inches (6") above the trunk flare for trees up to four inches (4") in caliper, and 12 inches (12") above the trunk flare for trees over four inches (4") in caliper. Plants shall be measured when

branches are in their normal position. If a range of size is given, no plant shall be less than the minimum size, and no less than fifty percent (50%) of the plants shall be as large as the maximum size specified. Plants that meet measurements but do not possess a normal balance between height and spread shall be rejected.

Plants shall not be altered by pruning or other means to meet specifications.

4. Plant Certification

All plants shall comply with State and Federal laws governing the shipping, selling and handling of plant stock and inspection for plant diseases and pest infestations. Plants shall be certified free from disease and infestation and invasive weeds. Any inspection certificates required by law shall accompany each shipment invoiced or order of stock, and on arrival, the certificate shall be filed with the Engineer before acceptance.

5. Delivery, Storage, and Handling

All plants shall be packed, transported, and handled with utmost care to ensure adequate protection against injury or damage to the root ball, and desiccation. Plants must be protected from excessive vibrations. Plants shall not be thrown or bounced off a truck or loader to the ground. Plants shall not be dragged, lifted, or pulled by the trunk or branches in a manner that will damage the branches or loosen the roots in the ball.

Plants material transported in vehicles shall be protected from wind whipping either by use of covered vehicle or secure tarps. Failure to protect plant material during transport to the site will result in rejection of plant material.

6. Inspection

The Engineer shall make periodic inspections prior to and during the installation and maintenance periods of the Work. All plants shall be inspected upon delivery to the job site whereupon the Engineer has the right to reject unacceptable plant material. Should plant materials, installation procedures, or other conditions be observed not in keeping with the Drawings, details, and these Specifications, the Engineer will direct the Contractor to correct by repair, and/or replacement as appropriate. The Engineer shall be the sole judge of the conditions of quality and acceptability and will direct all corrections in writing to the Contractor. All rejected materials shall be immediately removed from the site and replaced with specified materials at no additional cost to the Owner.

B. Mulch

Mulch shall consist of shredded bark mulch, wood chips or rock mulch as specified on the Drawings. Material shall be uniform in size, color, quality and overall appearance. Mulch shall be free of material injurious to plant growth. Sources of mulch should be free of weeds and invasive plant parts or seeds. Sawdust, dirt, garbage, or other debris mixed in the mulch is not acceptable. Contractor shall submit two pounds of proposed mulch for inspection by Engineer.

1. Wood Chips

Wood chips shall consist of wood products having a size of two and one-half inch (2-1/2") minus with a thickness not greater than three-eighths inch (3/8"). Wood chips shall be uniform in overall appearance, color, quality, and size and are subject to approval by the Engineer. Wood chips are to be free of sawdust, dirt, twigs, excessive bark, or any other debris.

2. Shredded Bark Mulch

Shredded bark mulch shall consist of shredded bark and wood. Maximum length of any individual component shall be two inches (2") and a minimum of seventy-five percent (75%) of the mulch shall pass through a one inch (1") screen. Mulch shall be free of invasive weeds, seeds, or propagules. The bark mulch shall have the characteristics of retaining moisture, forming a mat not susceptible to spreading by wind or rain, and providing a good growth medium for plants. Shredded bark much may contain up to fifty percent (50%) shredded wood material. Wood chips are not acceptable. Bark mulch containing shredded wood shall be aged a minimum of one year prior to installation. Bark mulch shall be free of soil, rocks, and weeds.

3. Rock Mulch

Rock mulch shall be three to four inch (3" to 4") washed river rock, uniform in size. All fines shall be screened from the aggregate within a one-quarter inch (1/4") tolerance. Rock mulch shall be composed of round rocks that may be varied in color. The material shall be free of organic and inorganic debris and trash.

C. Anti-desiccants

Anti-desiccants shall consist of "Wilt-Pruf" or approved equal.

D. Topsoil

Refer to Section 75.03, Article 3.2 - Materials.

E. Fertilizer/Lime

Refer to Section 75.05, Article 5.2, SubArticles B - Fertilizer and C - Limestone.

F. Water

Water used for the planting, establishment, and all operations of maintenance shall be potable. The water shall be suitable for irrigation, free from substances harmful to plants. The Contractor shall supply a water source unless waived by written authorization from the Engineer.

G. Wood Stakes and Ties

Deciduous Trees: Contractor shall provide two (2) stakes that are six feet (6') in length and are two by two inches (2" x 2") around. Stakes shall be pointed at one end.

Evergreen Trees: Contractor shall provide three (3) stakes that are twenty-four inches (24") in length and are two by two inches (2" x 2") around. Stakes shall be pointed at one end.

Ties: Ties shall be of three-quarter inch (3/4") or wider bands of polypropylene, elasticized or webbed strapping, or horticultural tape. Ties shall have a smooth surface and be flexible to allow some movement of the trunk without damaging the bark.

Article 2.3 Construction

A. Notification

Contractor shall notify Engineer at least 5 (five) working days prior to delivery of plant material to the site. Engineer shall inspect plant material prior to off-loading.

B. Planting Season

Planting shall be done when temperatures are above freezing, the ground is frost free, and the soil is in a workable condition. Unless otherwise specified in writing by the Engineer, planting of trees shall be done between May 1 and October 1.

C. Layout and Coordination

The Contractor shall mark all planting areas with stakes or paint. The Engineer shall approve the layout before planting begins. Contractor shall not stage planting operations on trails or sidewalks.

The Contractor shall obtain a utility locate and ensure that utility marking is complete before any excavation begins. The Contractor shall locate any subsurface improvements such as sprinkling system or conduits. The Contractor shall be

responsible for all damage resulting from neglect or failure to comply with this requirement.

Shrubs and small trees with mature height less than fifteen feet (15') shall be planted at least ten feet (10') from overhead power lines. Trees with a mature height greater than fifteen feet (15') but less than twenty-five (25') shall be planted at least fifteen feet (15') from overhead power lines. Trees with a mature height greater than twenty-five feet (25') shall be planted at least twenty feet (20') from overhead power lines.

The Contractor shall be responsible for moving trees if planted closer than the specified distance. The Engineer reserves the right to relocate plant materials based on utility locations.

D. Protection of Existing Trees

Contractor shall protect existing trees that are not designated for removal on the Drawings. Contractor shall identify a Tree Protection Zone (TPZ) in which activities are restricted around each existing tree that is not designated for removal on the Drawings. The TPZ shall be submitted and approved by the Engineer. The TPZ shall measure as one foot of root area per one inch Diameter Breast Height (DBH). The TPZ shall be defined with fencing materials that prohibit disturbance, excavation, trenching material storage, including soil or grade changes. The tree shall be protected to the drip line. The Contractor shall not stage or store materials within the TPZ. Contractor shall ensure that all land disturbance, excavation, trenching and grade changes, directional boring, routing of utilities and irrigation systems, sidewalks, driveways, construction access roads, changes to street lighting, fire hydrants and utility boxes takes place outside of the TPZ.

Contractor shall thoroughly water exposed root systems and cover them with a waterproof sheet until backfilled. Contractor shall ensure bark, branches, roots, and balls of plants are adequately protected at all times from damage including sun, drying winds and frost.

Contractor shall ensure tree branches, trunk, and roots of existing trees are protected during construction. Measures for protection may include effective barrier fencing, branch and/or root pruning, protective mulch, supplementary water, soil aeration and information signage.

Contractor shall replace trees damaged beyond repair with trees of equivalent value based on the Guide for Plant Appraisal (latest edition) as appraised by a qualified International Society of Arboriculture Certified Arborist, at no additional cost to the Owner. Contactor shall remove and dispose of damaged trees, and install replacement trees in accordance with this Section. Payment for this Work is incidental to the Contract.

E. Existing Plant Relocation:

Existing trees and shrubs designated for relocation as shown on the Drawings shall be dug according to the applicable standards for the plant type. Plants shall be dug, balled and burlapped, containerized, or dug bare root, moved and planted in accordance with specified tree planting requirements.

Trees designated for relocation may be stored in a designated plant storage area for heeling-in of materials until final planting areas are prepared. Contractor shall maintain plants in storage areas by bracing plants in vertical position and setting balls in an enclosed berm of topsoil or bark. Contractor shall water as required to maintain adequate root moisture. Contractor shall re-burlap plants balls if required before final transplanting operations.

F. Setting and Planting

Contractor shall set balled and burlapped plants, which are not planted immediately upon delivery, on the ground and protect them with soil, moist shredded bark, mulch or other acceptable material. Contractor shall protect plants, if possible, from direct sun until they are planted. Contractor shall keep the soil in the containers and root balls in a moist condition.

Planting pit will be a minimum radius of three (3) times the root ball diameter. The sides of the hole will be sloped at forty-five degrees (45°) and scarified. The depth of the planting pit will vary but shall match root ball depth.

Plants shall be gently removed from containers before planting.

Each plant shall be planted straight and plumb per standard planting details. Trees shall be planted so that the root flare is at the soil surface of the ultimate finished grade. Plants planted lower than the surrounding grade will be replanted to specified grade before final inspection/approval is granted.

Plants shall be set on firm soil (undisturbed or compacted) so that plant will be at the same depth one year after planting. Any repositioning of trees shall be done by supporting and moving the root ball, not lifting by the trunk. Plants shall be set with the top of the root flare at or slightly above finished grade. Any soil above the root flare must be carefully removed. The root flare shall be at the soil surface. At least two roots must emerge from the trunk within one to three inches (1” to 3”) of the soil surface, measured four inches from the trunk.

Roots that are circling the bottom, sides or surface of the root ball shall be gently separated and directed away from the trunk. Roots of bare root plants shall be spread into a natural position, over a pedestal of firm soil if necessary, free of bunching, kinking or circling. Soil shall be worked firmly into and around the roots so that there are no air pockets. All broken or damaged roots shall be cut back to the point where they are clean and free of rot. No other root pruning shall be done.

After the plant has been set, all ropes, wire, stakes, burlap, plant labels and wrapping around the trunk or branches shall be removed.

Contractor shall remove wire baskets and burlap from the planting area. If a pulp nursery pot is used, it shall be removed from the planting area.

Staking is not recommended as a routine practice. Exceptions include very windy sites, areas where vandalism is expected, or when planting large bare root trees in light soil. Roots must remain stationary but the trunk shall be able to sway in the wind to develop trunk taper and strength. The Contractor shall remove staking and guying material no later than one (1) year after installation.

G. Backfilling Planting Pits and Planting Beds

Backfill shall be from existing soil excavated from planting pits or approved topsoil per Section 75.04 - Topsoil. When holes are approximately two-thirds (2/3) full, soil shall be thoroughly watered to eliminate air pockets. Planting pits and beds shall be backfilled carefully as specified to fill all voids and to avoid breaking root ball or bruising roots. If settling of the backfill occurs after watering, add more backfill to bring to finish grade.

H. Trees

A continuous six inch (6") soil saucer shall be formed around the extent of the planting pit of each tree planted on lower side of the slope to act as a watering basin, except where noted on the Drawings and/or details. This saucer shall be repaired as necessary to continue functioning throughout the maintenance period.

I. Shrubs

A continuous four inch (4") soil saucer shall be formed around the extent of the planting pit of each shrub on the downhill side of a slope to form a watering basin; except where noted on the Drawings and/or details. This saucer shall be repaired as necessary to continue functioning throughout the maintenance period.

J. Ground Cover

Excavate a hole sufficient to receive the root spread and backfill around plants with topsoil and tamp soil to hold plant in place. The ground cover shall be planted in alternate rows, unless otherwise specified.

K. Watering

Thoroughly water each plant immediately following planting. Under no condition shall plants not be watered in the same day as planting. The Contractor shall water per maintenance specifications, Article 2.4, SubArticle B – Watering. The Contractor shall assume full responsibility for plant failure as a direct result of

insufficient watering. Upon directive from the Engineer, the Contractor shall remove the affected plants and replace them immediately. Replacement of plants is considered incidental to the Contract and no separate payment shall be made.

L. Mulching

After planting has been approved by the Engineer, mulch materials as specified shall be placed and spread where and to the depth indicated on the Drawings. The boundaries of this mulch shall include planting-saucers around the trees and shrubs unless otherwise indicated. Mulch shall be pulled back four to six inches (4" to 6") from the tree trunk.

M. Pruning and Repair

The only pruning allowed at planting shall be removal of dead, damaged, or broken branches and roots. Pruning shall conform to the American National Standard for Tree Care Operation, ANSI A300. No pruning paint or other wound dressing shall be used.

N. Staking

The Contractor shall stake only if necessary. Ties made of approved material shall be attached directly to the stakes or attached to the stakes by wire. In no case shall the wire extend around the tree trunk, even if covered by a hose.

Ties shall be attached loosely enough to allow the trunk to sway in the wind without allowing movement to the roots. Ties shall be secured at the lowest point on the trunk at which the root ball remains stationary, approximately one-third up the tree. Stakes shall be driven outside the root ball and eighteen inches (18") into solid ground. Tops of stakes shall be cut off above ties so they do not damage the branches.

For trees larger than three inches (3") in caliper, ties shall be attached to three guy wires and ground anchors or stakes as detailed in the Drawings. Anchors or stakes shall be driven at a forty-five degree (45°) angle to the ground and placed at one hundred and twenty degree (120°) intervals around the trunk. Staking and guying shall conform to the Drawings.

The Contractor shall remove all stakes, ties, and guy wires one year after installation. The stakes, ties and wires are the property of the Contractor.

O. Clean-up

The Contractor shall keep the project site and all roads and trails utilized during the project, clean and free of trash, excess equipment, materials, and rubbish, including sweeping and washing of trails and pedestrian facilities. Cleanup will be one of the conditions to be met prior to all phases of planting acceptance.

P. Winter Shut-down

Winter shut-down of all installation work shall occur between October 1 and May 1 of the following spring. During winter shutdown periods or work suspensions, the Contractor shall comply with Division 10 – Standard General Provisions regarding responsibilities and protection of all Work under the Contract.

Q. Plant Replacement

A tree is considered dead when the main leader has died back or when twenty-five (25%) of the crown is dead. Contractor shall provide plant material replacements of the same size and type as specified on the plant schedule. The Contractor shall repair to the satisfaction of the Engineer, or replace dead or damaged plant materials at no additional cost to the Owner within five (5) working days after receiving written notice to do so by the Engineer. If Work is not completed to the Engineer's approval within the time limitation, the Engineer may exercise the option to have a contractor of the Owner's choosing to perform the Work. If this option is exercised, the cost of that Work will be the responsibility of the Contractor and the Owner shall withhold payment to the Contractor in sufficient amount to recover those costs.

R. Acceptance of Initial Planting Operations

Upon completion of all initial planting operations (planting and seeding), the Contractor shall, per Division 10, Section 10.05, Article 5.26 – Final Inspection, submit a written request for an inspection of plant material.

Initial planting operation ends when:

1. All plants are installed, mulched and watered as specified;
2. Stakes and guys are in place;
3. All construction material and excess excavated material is removed and clean-up is completed;
4. Planting area is free of weeds or any unspecified plants; and
5. Plant material is healthy and vigorous.

Upon written acceptance of all Work by the Engineer, the one year Plant Establishment Period shall begin.

Article 2.4 Maintenance

A. General

The Contractor shall furnish all labor, materials, supplies and equipment required to establish, maintain, and protect the planted and seeded areas, for a one year Plant

Establishment Period from date of acceptance of the initial planting operations. However, maintenance activities shall commence immediately after each item is planted or when areas have been seeded.

The Contractor shall supply a maintenance schedule to the Engineer, thirty (30) days prior to the landscape inspection. The Contractor shall also be responsible for protection of his work during the maintenance period, and shall repair and replace all materials and seeded areas damaged or destroyed within the scope of the Work, regardless of cause.

The Contractor's staff shall include supervisory personnel experienced in landscape maintenance. The Work Force is to be experienced and familiar with maintaining plant material in subarctic conditions.

Contractor shall replace any tree or shrub damaged by vandalism, a lawnmower, weed whip or other equipment at no additional cost to the Owner.

B. Watering

A proposed watering schedule shall be submitted to the Engineer thirty (30) days prior to installation of plant materials. The Contractor shall deep water all trees and shrubs, providing water penetration throughout the root zone to the full depth of the planting pits.

The Contractor shall deep water all trees and shrubs twice each week during the maintenance period. Watering shall cease at first hard frost in the fall and shall resume upon ground thaw in the spring.

If at any time during the maintenance period weather conditions (such as extended period with no rain or continuous drying winds) cause the plant root zone to dry out, the Engineer may direct the Contractor to deep water all trees and shrubs. Contractor shall provide supplemental watering immediately and at no additional cost to the Municipality.

Water application shall be applied at a rate that will provide moisture penetration throughout the entire root zone with a minimum of water run-off. Should soil conditions be encountered that are not conducive to water absorption, the Contractor shall take whatever corrective actions that may be required to correct this condition, without additional cost to the Owner.

Turf, seeded, bulb areas, and annual flower beds shall be watered at such frequency as weather conditions require to maintain soil moisture within the root zone. When establishing turf and seeded areas, the soil shall be watered often enough to maintain a moist seedbed to promote healthy seed germination resulting in an even and uniform coverage. If the Contractor does not provide adequate watering as required by the Engineer, the Engineer will hire others to perform this task and deduct costs from final payment to the Contractor.

C. Pruning

Pruning shall only be conducted for repair or as specified by the Engineer. Pruning shall conform to ANSI 300 Standards and shall be done under the supervision of a certified arborist. Dead, broken, or damaged branches may be pruned at any time. Pruning for form shall begin no sooner than two years after installation. No tree shall be topped. Any tree damaged by improper pruning shall be replaced by the Contractor.

D. Staking and Guying

Stakes and guys, where used, are to be inspected and adjusted as necessary throughout the maintenance period to prevent girdling of trunks or branches, and to prevent rubbing that causes bark wounds. Damaged or missing tree stakes shall be immediately replaced by the Contractor at no additional cost to the Owner. Contractor shall remove staking after the first year, unless the Engineer requests them to be left on longer. Unless otherwise specified, stakes shall be removed at the end of warranty.

E. Plant Repair and Replacement

The Contractor shall repair/replace damaged plant materials, regardless of cause, immediately upon notification by the Engineer. Repair shall include pruning, guying, staking, etc., as necessary. Should repair of plant materials reduce their acceptance to less than minimum specified conditions, the Contractor shall replace plants with specified plant replacements at no additional cost to the Owner.

F. Fertilization

If the construction or maintenance period extends into a second growing season, representative soil tests from the project site shall be taken by the Contractor and submitted to an approved testing lab no later than May 5 for fertility testing. The results of these tests and recommendations for fertilization and limestone application shall be provided to the Engineer and will be the basis for establishing required application rates. All necessary applications shall be completed prior to June 15 or before the end of the maintenance period, whichever occurs first.

Formulations will vary according to soil tests.

G. Diseases and Pests

The Contractor shall coordinate with the Engineer in the event that disease, invasive plant infestation, or pest problems are observed on plants within a Project area. The Contractor and the Engineer shall formulate an Integrated Pest Management program to control the disease, invasive plants, or pests. The IPM program can use biological, physical, cultural, mechanical, behavioral, and chemical methods to resolve the issue. Chemical pesticides are to be used only when other options are

not feasible or effective. If pesticides are used, the least toxic pesticide to accomplish the task shall be used.

The Contractor shall apply all materials in complete compliance with all State, Federal, and local regulations, and shall supply the Engineer written proof of their safety and acceptability by State, Federal and Local jurisdictions.

In the event a "restricted use" pesticide is to be applied, the Contractor shall obtain appropriate permits and certifications (according to current 18 AAC 90 Pesticide Control) from the State of Alaska, Department of Environmental Conservation. Proof of certification shall be transmitted to the Engineer prior to application of the chemicals.

H. Weeding - The Contractor shall maintain all areas in a weed-free condition. Weed removal shall be a routine maintenance activity. Chemical application must be in compliance with State of Alaska rules and regulations and Anchorage Municipal Code 15.75.

I. Cleanup - The Contractor shall keep the project site clean and free of all trash and excess equipment, materials, rubbish, including plant tags, wire, burlap, ribbon, and all debris found within the Project limits, including all roads and trails utilized during Construction. Cleanup will be one of the conditions to be met prior to acceptance of landscape installation and Final Acceptance.

J. Other Tree and Shrub Maintenance - To protect coniferous trees during the winter from excessive desiccation, apply an anti-desiccant such as "Wilt-Pruf" (or approved equal) prior to the winter shut-down period. Complete coverage of all foliage is required.

K. Inspection - The Engineer shall make periodic maintenance inspections of the work. All deficiencies noted shall be corrected within five (5) calendar days from written notice, at no additional cost to the Owner. All delays beyond the five-day period shall result in an equal number of days added to the one year Plant Establishment Period.

L. The final mowing of the grass in the fall should be left at a height of two inches (2”).

Article 2.5 Landscaping Acceptance

A Landscaping Acceptance Inspection of the project will occur after completion of the Plant Establishment Period. Engineer shall verify that Contractor performed maintenance functions as identified in Article 2.4 – Maintenance of this Section. Additional conditions governing Landscaping Acceptance of the planted and seeded areas are that, in the opinion of the Engineer, all plants are in a live, uniform, and sound and healthy and flourishing condition; free of disease, insect infestation and physical damage, and free of weeds, rubbish and construction debris. If the Engineer does not accept the plantings, the Contractor shall correct all deficiencies. All costs associated with correcting the deficiencies and extending the Plant Establishment Period shall be paid by the Contractor without additional cost to the Owner.

Should required corrections not be made within thirty (30) days after the initial Landscaping Acceptance Inspection, the Contractor shall be assessed liquidated damages per Division 10, Section 10.05, Article 5.27 – Liquidated Damages, until all Work is complete and accepted by the Engineer.

Article 2.6 Measurement

Seventy percent (70%) of each bid item shall be measured as quantity of plants by individual plant count, or by area as specified.

The remaining thirty percent (30%) of each bid item shall be measured as maintenance Work performed during the Plant Establishment Period and the acceptance of the landscaping improvements in the condition identified in Article 2.5 of this Section. Payment process and exceptions are identified in Article 2.7 below and in Division 10, Section 7.7 – Final Payments.

Article 2.7 Basis of Payment

Payment for this Work shall be in accordance with Division 10, Section 10.07 - Measurement and Payment, and shall include full payment for all Work described in this Section.

Payment for all trees, shrubs, and perennials includes payment for the Plant Establishment Period. Owner will pay the accepted quantity of trees, shrubs and perennials after the Acceptance of Initial Planting Operations, based on seventy percent (70%) of the Contract unit price for the respective pay items.

The remaining thirty percent (30%) for the maintenance during the Plant Establishment Period shall be paid upon Landscaping Acceptance except as noted below.

- If Contractor did not perform maintenance in accordance with Article 2.4 – Maintenance, the remaining 30% shall not be paid.
- If damaged trees, shrubs, and perennials are not repaired or replaced as required within fourteen (14) days of written notice, the Engineer may replace or have replaced the damaged items and deduct the cost of said repair or replacement work from the remaining payments. The cost of said repair or replacement work is based on receipts for replacement plants, shrubs, or trees plus ten percent (10%) administrative markup. Replacement by the Owner of any plantings within the last sixty (60) days of the Plant Establishment Period shall trigger a sixty (60) day extension of the Plant Establishment Period.

Payment shall be made on the following basis:

ITEM	UNIT
Trees (by species and size as indicated on Drawings)	Each
Shrubs (by species and size as indicated on Drawings)	Each
Ground Cover (by species and size)	Each
Perennials (by species and size)	Each

SECTION 75.03 TOPSOIL

Article 3.1 General

The Work under this Section consists of providing all operations pertaining to furnishing, transporting, and spreading of topsoil.

Article 3.2 Materials

Topsoil furnished by the Contractor shall consist of a natural friable surface soil without admixtures of undesirable subsoil, refuse, or foreign materials. It shall be shredded and free from roots, hard clay, rocks larger than one inch (1") in any dimension, noxious weeds, seeds or plant propagules, tall grass, brush, sticks, stubble, or other litter, and shall have indicated by a healthy growth of crops, grasses, trees, or other vegetation that it is free-draining and non-toxic. Topsoil shall contain not more than ten percent (10%) gravel by dry weight of total sample. For the purposes of this specification gravel is defined per ASTM D422 modified to include only material passing one inch (1") and retained on the No. 4 sieve.

Topsoil shall conform to the following requirements, as tested using the procedures included in ASTM D422, ASTM D2974 and AASHTO T267. The topsoil shall be inspected and tested by the Engineer before approval will be granted for its use.

	Topsoil Mix	Athletic / Sports Field	Sports Field / Infield Loam
Organic Material *	15-25% by dry weight of total sample	Not less than 15% nor more than 25% by volume	0.0%
Silt	25% to 45% by dry weight:	Not less than 20% nor more than 35% by volume	75% to 85% by volume
Sand	35% to 55% by dry weight:	Not less than 50% nor more than 55% by volume	15% to 25% by volume
		Required depth of the field is six inches (6") after settling.	

* Organic matter is to be determined by loss-on-ignition of oven-dried material in accordance with ASTM D2974.)

Limestone and Fertilizer: Fertilizer shall be of standard commercial types supplied separately or in mixtures, and furnished in moisture-proof containers. Each container shall be marked with the weight and the manufacturer's guaranteed analysis of the contents showing the percentage for each ingredient contained therein.

The proportion of chemical ingredients furnished shall be a mixture that provides the total available nitrogen, phosphoric, and potassium as required by the soil analysis or as specified in the Special Provisions.

Tolerances of the chemical ingredient shall be plus or minus two percent (±2%).

No cyanamid compounds or hydrated lime will be permitted in mixed fertilizers.

Limestone shall contain not less than eighty-five percent (85%) of calcium and magnesium carbonates. Agricultural ground limestone suitable for application by a fertilizer spreader shall conform to the following gradation:

Sieve Designation	Minimum Percent Passing, by Weight
# 10	100
# 20	90
# 100	50

Pelletized limestone may be used subject to approval by the Engineer.

Sufficient fertilizer and limestone shall be applied to the topsoil such that the total natural and applied chemical constituents are within the following ranges:

Nitrogen	30-50 PPM
Phosphoric Acid	60-110 PPM
Potassium	76-150 PPM
Limestone	Sufficient to attain a pH of 6.0 to 7.0

The Contractor shall furnish soil analysis test reports to the Engineer ten (10) days prior to final placement for Engineer comment or acceptance. Fertilizer and limestone shall be applied at the rates indicated by the soil tests and worked into the topsoil to a uniform depth of two inches (2”).

Organic material for incorporation into topsoil, shall be partially decomposed peat moss. Organic material shall be from a source above the water table. Peat moss may require chopping or shredding to insure thorough mixing with the topsoil.

Article 3.3 Placing

The topsoil shall be evenly spread on the designated areas to a depth of four inches (4”) after settlement unless otherwise specified on the Drawings. Contractor shall not place or

spread topsoil when the ground or topsoil is frozen, excessively wet, or otherwise in a condition detrimental to the Work.

Settlement for seeded areas shall be achieved by rolling the topsoil with a water-filled drum approved by the Engineer. The Engineer may direct that topsoil placed on slopes be track-walked perpendicular to the slope with a small track dozer. Track walking shall be incidental to this bid item and no separate payment shall be made.

Topsoil in planting beds shall be at the depth shown on the Drawings, but no less than twelve inches (12").

Contractor shall keep roadway surfaces within the project and on haul routes clean during hauling and spreading operations.

Article 3.4 Measurement

Measurement shall be the number of 1,000 square foot units measured to the nearest 0.1 unit on the ground surface. Stockpiling and rehandling of topsoil during stripping operations, or during placement, shall not be measured for payment. Topsoil placed in planting beds is incidental to Work described in Section 75.02 and no payment shall be made under this Section.

Article 3.5 Basis of Payment

Payment for this Work shall be in accordance with Division 10, Section 10.07 - Measurement and Payment, and shall include full payment for all Work described in this Section.

Unit cost payment shall be made on the following basis:

ITEM	UNIT
Topsoil (Depth)	1,000 Square Feet (MSF)

SECTION 75.04 SEEDING

Article 4.1 General

The Work under this Section shall consist of providing all labor, equipment, and materials for the preparation of ground surfaces for the application and maintenance of seeded areas, fertilization, lime application (if necessary), watering, and mulching at locations shown on the Drawings or established by the Engineer.

All seeding shall be performed between May 1 and September 1. Seeding any other time will only be allowed upon written approval from the Engineer. Seeding shall not be done during windy conditions or when climatic or ground conditions would hinder placement or proper germination of seed mixes.

Article 4.2 Materials

A. Seed

The Contractor shall submit to the Engineer a certification tag for the seed mixes provided listing species, proportion by weight, percent purity, and percent germination. The certification tag shall come from the specified seed mixes and be removed from the unopened bags in the presence of the Engineer. Contractor shall deliver seed to the site in its original unopened container, which shall bear the vendor's guarantee of analysis.

Seed shall conform to one of the following seed mix types and application rates:

Schedule A: Mowable Seed Mix
Application Rate: 5 lbs./1,000 s.f.

Name	Proportion By Weight	Purity	Germination
Annual Ryegrass *(Lolium multiflorum)*	5%	90%	85%
Kentucky Bluegrass			
Alpine *(Poa pratensis)*	30%	90%	85%
Alene *(Poa pratensis)*	25%	90%	85%
Boreal Fescue *(Festuca rubra 'Boreal')*	40%	90%	85%

Schedule B: Wildflower Seed Mix
Application Rate: 3 lbs./1,000 s.f.

Name	Proportion By Weight	Purity	Germination
Arctared Fescue *(Festuca rubra)*	30%	80%	98%
Gruening Alpine Blue *(Poa alpina)*	30%	85%	90%
Nootka Lupine *(Lupinus nootkatensis)*	20%	85%	95%
White Yarrow *(Achillea millefolium var millefolium)*	10%	70%	85%
Dwarf Columbine *(Aquilegia vulgaris)*	5%	85%	90%
Rocket Larkspur *(Delphinium ajacis)*	5%	85%	85%

Schedule C: Wetland Seed Mix
Application Rate: 3 lbs./1,000 s.f.

Name	Proportion By Weight	Purity	Germination
Red Fescue (Arctared) *(Festuca rubra 'Arctared')*	30%	90%	85%
Bering Hairgrass *(Deschampsia beringensis)*	30%	90%	85%
Polargrass *(Arctagrostis latifolia)*	10%	90%	85%
Egan American Sloughgrass *(Beckmannia syzigachne 'Egan')*	30%	90%	85%

Schedule D: Revegetation/No-Mow Seed Mix
Application Rate: 5 lbs./1,000 s.f.

Name	Proportion By Weight	Purity	Germination
Nortran Tufted Hairgrass *(Deschampsia caespitosa)*	50%	90%	85%
Red Fescue (Arctared) *(Festuca rubra 'Arctared')*	40%	90%	85%
Annual Rye *(Lolium multiflorum)*	10%	90%	85%

Schedule E: Athletic Field Seed Mix
Application Rate: 4 lbs./1,000 s.f.

Name	Proportion By Weight	Purity	Germination
Fescue (Arctared) *(Festuca rubra 'Arctared')*	60%	90%	85%
Kentucky Bluegrass (Alpine) *(Poa pratensis)*	25%	30%	90%
Rye Grass (Pinstripe Perennial) *(Lolium perenne)*	15%	90%	85%

B. Fertilizer

Fertilizer shall be of standard commercial types supplied separately or in mixtures, and furnished in moisture-proof containers. Each container shall be marked with the weight and the manufacturer's guaranteed analysis of the contents showing the percentage for each ingredient contained therein. The proportion of chemical ingredients furnished shall be a mixture such as to provide the total available nitrogen, phosphoric, and potassium as required by the soil analysis or as specified in the Special Provisions.

Tolerances of the chemical ingredients shall be plus or minus two percent (±2%).

No cyanamid compounds or hydrated lime will be permitted in mixed fertilizers.

C. Limestone

Limestone shall contain not less that eighty-five percent (85%) of calcium and magnesium carbonates. Agricultural ground limestone suitable for application by a fertilizer spreader shall conform to the following gradation:

Sieve Designation	Minimum Percent Passing, by Weight
# 10	100
# 20	90
# 100	50

Fertilizer and limestone for use in a hydraulic sprayer shall be soluble or ground to a fineness that will permit complete suspension of insoluble particles in water.

D. Mulch

Shall be dried shredded peat moss; or cellulose wood or paper fiber such as "Astromulch," "Silvafibre," "Conwed," or approved equal.

E. Water

Water used in all operations shall be of potable quality.

Article 4.3 Application

A. Soil Preparation

After grading of areas has been completed in conformity with the lines and grades shown on the Drawings, and before beginning seeding operations, the areas to be seeded shall be cultivated to provide a reasonably firm but friable seedbed. Cultivation shall be carried to a depth of two inches (2"). On slopes steeper than 3:1, depth of cultivation may be reduced as directed by the Engineer. All cultivated areas shall be raked or cleared of stones (one inch [1"] in diameter and larger), weeds, plant growth, sticks, stumps, and other debris or irregularities which might interfere with the seeding operation, germination of seed, or subsequent maintenance of the seed-covered areas. Contractor may be required to track-walk slopes 2:1 or over as directed in the Drawings or by the Engineer.

B. Fertilizer

Fertilizer shall be applied at a rate to provide two (2) pounds actual Nitrogen per thousand (1,000) square feet of area. In the absence of soil tests and direction from the Engineer, the Contractor shall apply 16-16-16 at the rate of twelve and

one-half (12.5) pounds per thousand (1,000) square feet. Fertilizer shall be in accordance with Section 75.04 - Topsoil.

C. Limestone

Limestone, whether in liquid or dry form, shall be applied at a sufficient rate to attain a soil pH between 6.0 and 7.0.

D. Application Methods

All machinery shall be free of invasive weeds, seeds, or plant propagules. Apply seed mixtures as specified under Article 5.2, SubArticle A - Seed at rates as specified and/or as directed by the Engineer. Seed, fertilizer, limestone, mulch, and water may be applied by the following methods:

1. Hydraulic Method

Seeding by hydraulic methods shall consist of furnishing and placing a slurry made of seed, fertilizer, dried peat moss or cellulose wood fiber and water.

The dried peat moss or cellulose wood fiber shall be added to the water slurry in the hydraulic seeder after the proportionate amounts of seed and fertilizer have been added. The slurry mixture shall then be combined and applied in such a manner that the rate of application will result in an even distribution of all materials.

Hydraulic seeding equipment shall be capable of maintaining a continuous agitation so that a homogeneous mixture can be applied through a spray nozzle. The pump shall be capable of producing sufficient pressure to maintain a continuous, non-fluctuating spray capable of reaching the extremities of the seeding area with the pump unit located on the roadbed. Sufficient hose shall be provided to reach areas not practical to seed from the nozzle unit situated on the roadbed.

2. Dry Method

Mechanical spreader, seed drills, landscape seeder, cultipacker seeder, fertilizer spreader, or other approved mechanical spreading equipment may be used when seed and fertilizer are to be applied in dry form.

Fertilizer shall be spread separately at the specified rates, and then incorporated in one operation to a minimum depth of two inches (2"). Seeded areas shall be compacted within twenty-four (24) hours from the time the seeding is completed, weather and soil conditions permitting, by cultipacker, roller or other equipment satisfactory to the Engineer. Compacting equipment shall be operated at right angles to the slope. Compaction shall not be performed when the soil is in such condition that it

will be picked up by the equipment, nor shall heavy soils be compacted unless directed by the Engineer.

3. Hand Method

Hand broadcasting by means of portable, hand operated mechanical spreaders or "by hand" may be substituted for the preceding two (2) methods provided that the application rate is twice that of the dry method, and that the application is applied in a minimum of two (2) passes over the areas to be seeded (at ninety degrees [90°] to one another in order to assure uniform and even coverage to all seeded surfaces).

Article 4.4 Maintenance

All maintenance shall be in accordance with Section 75.02, Article 2.4 – Maintenance.

The Contractor shall protect seeded areas from damage from all traffic, whether people, animals, on or off road vehicles, or any other causes which may damage newly seeded and maintained surfaces. Contractor shall maintain a minimum coverage of 90%. Surfaces damaged shall be repaired by regrading, reseeding (including all specified amendments), as directed by the Engineer, at no additional cost to the Owner. The Contractor shall otherwise maintain seeded areas in a satisfactory condition until Final Acceptance of the Work.

On the fortieth (40th) day of the maintenance period, the Contractor shall apply one application of fertilizer (16-16-16) at the rate of seven (7) pounds per thousand (1,000) square feet.

Article 4.5 Measurement

The quantity of seeding to be paid for shall be the number of thousand (1,000) square foot units, measured to the nearest 0.1 unit on the ground surface. The quantity of seeding specified shall include all cultivating, seed, limestone, if required, fertilizer and mulch material of the type specified, complete and accepted.

Article 4.6 Basis of Payment

Payment for this Work shall be in accordance with Division 10, Section 10.07 - Measurement and Payment, and shall include full payment for all Work described in this Section.

Payment for all seeding includes payment for the forty-five day establishment period. Owner will pay the accepted quantity of seeding after it is acceptably planted and established.

If damaged seeded areas or areas with insufficient coverage are not repaired or replaced as required within fourteen (14) days of written notice, the Engineer may replace or have replaced the damaged items and deduct the cost of said repair or replacement work from the remaining payments. The cost of said repair or replacement work is based on receipts for replacement seeding, excavation or earthwork as required, and ten percent (10%) administrative markup.

Payment shall be made on the following basis:

ITEM	UNIT
Seeding (Type)	1,000 Square Feet

When more than one type of seeding is specified for any pay item, letter suffixes shall be included in order to differentiate between different types.

SECTION 75.05 SOD

Article 5.1 General

A. The Work under this Section consists of performing all operations pertaining to furnishing, installing, and maintaining sod.

B. Agency Standards: Nomenclature

All plant materials used shall be true to name and size conforming to the *Guideline Specifications to Turfgrass Sodding*, American Sod Producers Association.

C. Submittals

Sod: Provide sales slip or certificate describing original seed blend.

Article 5.2 Materials

A. Sod shall be:

Name	Proportion by Weight
Kentucky Bluegrass:	
Nugget	50-100%
Merion	0-50%

B. Sod shall be deep green in color, free of chloritic conditions or signs of disease, weeds, or infestation. Sod shall be grown in an area of well-drained, loamy soils.

C. Sod shall be #1 Quality/Premium as described in "Guideline Specifications to Turfgrass Sodding." It shall be grown on cultivated agricultural lands and grown specifically for sod purposes.

Article 5.3 Construction

A. Sod Bed Preparation

After grading of areas has been completed in conformity with the lines and grades shown on the Drawings or as directed by the Engineer, scarify and till to a depth of two inches (2") all areas designated to receive topsoil. All cultivated areas shall be raked or cleared of stones one inch (1") in diameter and larger; all debris or irregularities that might interfere with the placement of sod, or subsequent maintenance shall be removed from the site. The Work shall be approved by the Engineer prior to placement of topsoil.

B. Placement of Topsoil in Sod Areas

Following the grading and cultivation of all areas to receive sod, place a uniform layer of topsoil. Topsoil shall be evenly spread on all designated areas to a finish depth of four inches, plus or minus one-half inch (4" ±1/2") after being lightly rolled with a water-filled roller. Spreading shall not be done when the ground is frozen, excessively wet, or otherwise in a condition detrimental to the Work. The Work shall be accepted by the Engineer prior to continuing other Work.

C. Soil Amendments for Sod Areas

Topsoil shall incorporate fertilizer and lime as necessary to meet topsoil chemical constituents. Contractor shall provide a soil test to verify nutrient deficiencies and soil pH.

D. Sod Placement

1. General

a. Sod shall be cut no more than twenty-four (24) hours before placement. It shall be stored in a manner that protects sod from moisture loss and from extremes in temperature. Soil shall be kept moist.

b. Sod shall be cut with sharp blades by mechanized equipment designed for the cutting of sod.

2. Harvest

a. Within twenty-four (24) hours of harvest, sod shall be mowed to a height of one to one and one-half inches (1" to 1-1/2").

b. Sod shall be cut so as to leave a full intact root mass. It shall be machine cut with a uniform soil thickness of five-eighths inch, plus or minus one-quarter inch (5/8" ±1/4") at the time of cutting. Sod that is dry or without soil firmly attached to roots shall be removed from the project site.

c. Sod shall be cut in straight lines. Cuts shall be of a width between twelve and twenty-four inches (12" and 24"), with all cuts to be the same width, plus or minus one-half inch (±1/2"), regardless of the width chosen. Each roll of sod shall be no shorter than four feet (4').

3. Placement

a. The ground surface shall be wet before placement of sod, to the extent that soil is damp to a six inch (6") depth.

b. Existing sod areas adjacent to areas to be installed shall have a clean, straight edge and shall be cut with clean, sharp tools. Existing sod edge shall be cut exactly perpendicular to soil surface.

c. Sod shall be laid perpendicular to the slope of the ground and anchored as appropriate. Where curves are necessary, the sod shall be cut to provide edges in full contact with adjacent sod. There shall be no gaps between adjacent pieces of sod. No sod pieces shall be less than three feet (3') in length, or as approved by the Engineer.

d. The first row of sod shall be laid in an even line commencing on lowest portion of slopes with subsequent rows placed parallel to and tightly against each other. Lateral joints shall be staggered to promote more uniform growth and strength. Care shall be exercised to ensure that the pieces are not stretched or overlapped and that all joints are butted tightly.

4. Finishing

Water the sod immediately after transplanting to prevent drying. As sodding is completed in any one section, the area shall be lightly rolled. The new sod shall then be thoroughly watered to a depth sufficient that the underside of the new sod pad and soil immediately below the pad are thoroughly wet. Contractor is responsible for having adequate water available at the site prior to and during installation.

Article 5.4 Maintenance

Maintenance of sod shall conform to Section 75.02, Article 2.4 - Maintenance.

Article 5.5 Measurement

Sod shall be measured per 1,000 square feet and shall be placed in all areas disturbed by construction, or as directed by the Engineer. The measurement of sod shall include all cultivating, materials, limestone, if required, and fertilizer.

Article 5.6 Basis of Payment

Payment of this Work shall be in accordance with Division 10, Section 10.07 - Measurement and Payment, and shall include full payment for all Work described in this Section.

Payment shall be made under the following unit:

ITEM	UNIT
Sod	1,000 S.F.

SECTION 75.06 LANDSCAPE EDGING

Article 6.1 General

The Work under this Section consists of all labor, equipment, and materials necessary to place landscape edging. All Work shall be in accordance with these Specifications and shall be placed at the locations shown on the Drawings.

Article 6.2 Materials

Landscape edging shall be “Permaloc Aluminum Edging,” black, aluminum, one-eighth inch (1/8”) thickness by four inch (4") depth with twelve inch (12”) standard aluminum stakes. Comparable products by other manufacturers will be considered provided complete supporting data from the manufacturer is submitted to the Engineer. Comparable products must be architecturally similar in size, type, and grading of materials, dimensions, finishes, and textures.

Permaloc Corporation

13505 Barry Street

Holland, Michigan 49424

Article 6.3 Construction

Landscape edging shall be installed per manufacturer’s specifications, in all locations shown on Drawings.

Article 6.4 Measurement

Landscape edging shall be measured per linear foot, delivered and accepted in place.

Article 6.5 Basis of Payment

Payment for this Work shall be in accordance with Division 10, Section 10.07 - Measurement and Payment, and shall include full payment for all Work described in this Section.

Payment shall be made under the following unit:

ITEM	UNIT
Furnish and Install Landscape Edging	Linear Foot

SECTION 75.07 LANDSCAPE FABRIC

Article 7.1 General

The Work under this Section consists of all labor, equipment, and materials necessary to place landscape fabric. All Work shall be in accordance with these Specifications and shall be placed at the locations shown on the Drawings.

Article 7.2 Materials

Landscape fabric shall be UV resistant, black polypropylene polyester blend with a permeability minimum of 12 gals/s.f./min. Landscape fabric shall be DeWitt Pro 5 Weed Barrier (1-800-325-0950) or approved equal.

Article 7.3 Construction

Landscape fabric shall be installed per manufacturer's specifications as called out on Drawings. Landscape fabric shall not be visible under bark mulch and all loose ends shall be cut off, tucked under, or otherwise covered with three inches (3") of wood chips by the Contractor. Landscape fabric shall be in direct contact with soil.

Article 7.4 Measurement

Landscape fabric shall be measured per square yard, delivered and accepted in place.

Article 7.5 Basis of Payment

Payment for this Work shall be in accordance with Division 10, Section 10.07 - Measurement and Payment, and shall include full payment for all Work described in this Section.

Payment shall be made under the following unit:

ITEM	UNIT
Landscape Fabric	Square Yard

SECTION 75.08 WILLOW STAKING

Article 8.1 General

The Work under this Section consists of providing all operations pertaining to the gathering, planting and establishing willow vegetation using willow stakes.

For additional reference, see the document “Stream Bank Revegetation and Protection – A Guide for Alaska” published by the Alaska Department of Fish & Game.

Article 8.2 Materials

Feltleaf willow cuttings shall be used and no substitutions shall be accepted without the written permission of the Engineer. Contractor shall be responsible for obtaining dormant cuttings and necessary permits for the collection of willow stakes.

The technique for using dormant cuttings relies on cuttings of stems taken from plants in the wild during late winter and requires proper storage and care of the cuttings between the time of collection and the time of planting.

Dormant cuttings are live stakes taken in the late winter or early spring before buds have opened. Live stakes should be ten to eighteen inches (10” to 18”) long and one-half to one and one-half inches (1/2” to 1.5”) in diameter, with visible buds. Place cuttings in plastic and keep frozen or refrigerated until the site is ready to plant. Stakes must not be allowed to dry out, nor should they be kept too moist. If cold storage facilities are not available, cuttings can be stored in a snowbank along the north side of a building or some other location that will remain cold until planting. Cuttings may be taken directly from storage to the site for planting. Plant in early spring, after the ground has thawed, and no later than July 1.

Article 8.3 Construction

A. Planting

To plant the cuttings, stick a shovel or three-quarter inch (3/4”) or less rebar into the ground as far vertically as possible, push the shovel forward and place the cutting right side up in the ground behind the shovel so that at least three-fourths (3/4) of the length will be buried. Leave a maximum of two leaf buds exposed above ground. Remove the planting implement and step lightly around the cutting to firm the soil. Create a small depression around the planting to collect water.

Willow stakes shall be planted as vertically as possible.

B. Spacing

Dormant cuttings shall be planted one to three feet (1' to 3') on center unless otherwise shown on the Drawings..

C. Watering

Thoroughly water each plant immediately following planting to remove air pockets and increase contact between the soil and the stake. Under no condition shall plants not be watered in the same day as planting. The Contractor shall maintain moist soil conditions for four to six (4 to 6) weeks to establish plants. Water shall be supplied by the Contractor unless otherwise specified. The Contractor shall assume full responsibility for plant failure as a direct result of insufficient watering.

D. Inspection

The Engineer shall make periodic inspections during the installation and maintenance periods of the Work. Should plant materials, installation procedures, or other conditions be observed not in keeping with the Drawings, details, and these Specifications, the Engineer will direct the Contractor to correct by repair, and/or replacement, as appropriate. The Engineer shall be the sole judge of the conditions of quality and acceptability and will direct all corrections in writing to the Contractor. All rejected materials shall be immediately removed from the site and replaced with specified materials at no additional cost to the Owner.

E. Time of Planting

Spring planting and maintenance shall not begin before May 1, and planting operations may commence as soon as the ground is frost free. Planting and maintenance shall not occur later than July 1, unless otherwise specified or approved in writing by the Engineer.

F. Winter Shut-down

Winter shut-down of all installation work shall occur between October 1 and May 1 of the following spring. During winter shut-down periods or work suspensions, the Contractor shall comply with Division 10 – Standard General Provisions regarding responsibilities and protection of all Work under the Contract.

G. Landscape Inspection

Upon completion of all planting operations, the Contractor shall, per Division 10, Section 10.05, Article 5.26 – Final Inspection, submit a written request for an inspection of planted areas. Upon written acceptance of all Work by the Project Engineer, the sixty (60) day maintenance period shall begin.

Article 8.4 Maintenance

A. General

The Contractor shall furnish all labor, materials, supplies and equipment required to establish, maintain, and protect the planted areas, for the Plant Establishment Period from date of acceptance of the initial planting operations. However, maintenance activities shall commence immediately after each item is planted.

The maintenance period shall consist of the time from initial planting through acceptance after the Plant Establishment Period.

The Contractor shall supply a maintenance schedule to the Engineer, thirty (30) days prior to the landscape inspection. The Contractor shall also be responsible for protection of his work during the maintenance period, and shall repair and replace all materials and seeded areas damaged or destroyed within the scope of the Work, regardless of cause.

The Contractor's staff shall include supervisory personnel experienced in landscape maintenance. The Work Force is to be experienced and familiar with maintaining plant materials in subarctic conditions.

Contractor shall replace any willow stake damaged during maintenance at no additional cost to the Owner.

B. Watering

A proposed watering schedule shall be submitted to the Engineer thirty (30) days prior to installation of plant materials. The Contractor shall deep water all planted areas, providing water penetration throughout the root zone.

The Contractor shall maintain soil around willow stakes in a moist condition during the maintenance period. Watering shall cease at first hard frost in the fall and shall resume upon ground thaw in the spring.

If at any time during the maintenance period, weather conditions (such as extended period with no rain or continuous drying winds) cause the plant root zone to dry out, the Engineer may direct the Contractor to deep water all plantings. Any supplemental watering is to be done immediately and at no additional cost to the Owner.

Water application shall be applied at a rate that will provide moisture penetration throughout the entire root zone with a minimum of water run-off. Should soil conditions be encountered not conducive to water absorption, the Contractor shall take whatever corrective actions that may be required to correct this condition, without additional cost to the Owner. If the Contractor does not provide adequate

watering as required by the Engineer, the Engineer will hire others to perform this task and deduct costs from final payment to the Contractor.

C. Plant Repair and Replacement

The Contractor shall repair/replace damaged plant materials, regardless of cause, upon notification by the Engineer. Should repair of plant materials reduce their acceptance to less than minimum specified conditions, the Contractor shall replace plants with specified plant replacements at no additional cost to the Owner.

D. Inspection

The Engineer shall make periodic maintenance inspections of the Work. All deficiencies noted shall be corrected within five (5) calendar days from written notice to do so, at no additional cost to the Owner.

Article 8.5 Landscaping Acceptance

A Landscaping Acceptance Inspection of the project will occur after completion of the Plant Establishment Period. Engineer shall verify that Contractor performed maintenance functions as identified in Article 8.4 – Maintenance of this Section. Additional conditions governing final acceptance of the planted areas are that, in the opinion of the Engineer, all willow stake areas are in a live, uniform, and sound and healthy and flourishing condition; free of disease, insect infestation and physical damage, and free of weeds, rubbish and construction debris. If the Engineer does not accept the improvements, the Contractor shall correct all deficiencies. All costs associated with correcting the deficiencies and extending the Plant Establishment Period shall be paid by the Contractor without additional cost to the Owner.

Should required corrections not be made within thirty (30) days after the initial Final Maintenance Acceptance Inspection, the Contractor shall be assessed liquidated damages per Division 10, Section 10.05, Article 5.27 – Liquidated Damages, until all Work is complete and accepted by the Engineer.

Article 8.6 Measurement

Seventy percent (70%) of each bid item shall be measured as quantity of plants by square yard as specified.

The remaining thirty percent (30%) of each bid item shall be measured as maintenance Work performed during the Plant Establishment Period and the acceptance of the improvements in the condition identified in Article 8.5 of this Section. Payment process and exceptions are identified in Article 8.7 below and in Division 10, Section 7.7 – Final Payments.

Article 8.7 Basis of Payment

Payment for this Work shall be in accordance with Division 10, Section 10.07 - Measurement and Payment, and shall include full payment for all Work described in this Section.

Payment for all willow plantings includes payment for the Plant Establishment Period. Owner will pay the accepted quantity of willow stakes after they are acceptably planted, based on seventy percent (70%) of the Contract unit price for the respective pay items.

The remaining thirty percent (30%) for the maintenance during the Plant Establishment Period shall be paid upon Landscaping Acceptance except as noted below.

- If Contractor did not perform maintenance in accordance with Article 8.4 – Maintenance, the remaining 30% shall not be paid.

- If damaged willows are not repaired or replaced as required within fourteen (14) days of written notice, the Engineer may replace or have replaced the damaged items and deduct the cost of said repair or replacement work from the remaining payments. The cost of said repair or replacement work is based on receipts for replacement cuttings plus ten percent (10%) administrative markup. Replacement by the Owner of any plantings within the last sixty (60) days of the Plant Establishment Period shall trigger a sixty (60) day extension of the Plant Establishment Period.

Payment shall be made on the following basis.

ITEM	UNIT
Willow Staking	Square Yard

SECTION 75.09 SITE FURNISHINGS

Article 9.1 General

Work under this Section consists of providing all operations pertaining to the removal, disposal, relocation, pickup, delivery, assembly, and installation of Owner-supplied Transit or Park site furnishings, including the labor, equipment, and materials. Work may include relocation of bus stop signs, removal and/or installation of bus shelters, trash receptacles, bear-proof trash cans, benches, poop stations, playground equipment, picnic tables, and other transit, park, or urban street furnishings.

Article 9.2 Materials

Contractor shall provide anchor bolts and other mounting hardware required for the complete installation of the site furnishings. Cost for these anchor bolts and mounting hardware is incidental to this pay item.

The Contractor is solely responsible for loading, transporting, unpacking, and assembly of site furnishings.

A. Transit Materials

Transit related materials for benches, trash receptacles, and bus shelters shall be furnished by the Owner and shall be the type shown on the Drawings. The Contractor shall contact Anchorage Transit System to pickup materials. The Contractor shall notify Transit Staff within forty-eight (48) hours in the event parts are missing.

B. Park Furnishings

Owner supplied park furnishings shall be the type shown on the Drawings. The Contractor shall contact Anchorage Parks and Recreation to pickup materials.

Park furnishings not Owner supplied must by consistent with current park standards. Contractor shall contact Anchorage Parks and Recreation for specific standards per location.

Article 9.3 Construction

Contractor shall load and transport the owner-supplied site furnishings to the site. Contractor shall assemble and install materials in accordance with the Drawings and the manufacturer's specifications.

Contractor shall repair paint finishes that are damaged during transportation to the site.

Method of measurement for the installation of the Owner-supplied furnishings is for each unit complete in place.

Method of measurement for the removal and relocation of the bus stop sign is for unit relocated and complete in place.

Article 9.5 Basis of Payment

Payment for this Work shall be in accordance with Division 10, Section 10.07 - Measurement and Payment, and shall include full payment for all Work described in this Section.

Payment shall be made under the following unit:

ITEM	UNIT
Install Owner-supplied Furnishing (Type)	Each
Remove and Relocate Bus Sign	Each
Remove Furnishing (Type)	Each

SECTION 75.10 MODULAR CONCRETE BLOCK WALL

Article 10.1 Description

Work under this Section consists of furnishing all labor, equipment, and materials to complete the construction of a modular concrete block wall and steps. Accomplish all work as shown on the Drawings and as described herein.

Article 10.2 Materials

Wall units shall be eight inch (8") Allan Block Retaining Wall System or an approved equal. Capstones and corner blocks are required.

Color: Grey

Size: 8"H x 12"D x 18L

Style: AB Classic

All materials required for proper installation of the retaining wall system, including specified backfill, are incidental to this Section.

Article 10.3 Manufacturer and Local Representative

Manufacturer:	Local Representative:
Allan Block Corporation	Anchorage Sand and Gravel Co., Inc.
7400 Metro Boulevard, Suite 185	1040 O'Malley Road
Edina, MN 55439	Anchorage, AK 99515
800-899-5309	907-267-5163
952-835-0013 (fax)	907-344-2844 (fax)

Article 10.4 Construction

Contractor shall install wall in accordance with manufacturer's specifications and as shown on Drawings. Contractor shall install wall to match the geometric layout shown on Drawings, including corners. Any changes in the layout require Engineer's approval. Contractor shall ensure the tops of wall elevations are continuous.

Contractor shall secure capstone with Type P1 Premium Water Proof Construction adhesive per the manufacturer's specifications.

Article 10.5 Method of Measurement

Measurement is the area in square feet based on the above-grade vertical face of complete units in place. Blocks, specified backfill or other items shown on the Drawings, are not measured separately for payment and are incidental to this bid item.

Article 10.6 Basis of Payment

Payment for this Work shall be in accordance with Division 10, Section 10.07 – Measurement and Payment, and shall include full payment for all Work described in this Section.

Payment shall be made under the following unit:

ITEM	UNIT
Modular Concrete Block Wall	Square Foot

SECTION 75.11 BOULDERS

Article 11.1 General

Work under this Section includes furnishing the labor, equipment, and materials necessary for the furnishing and placing of Contractor-supplied boulders.

Article 11.2 Materials

Contractor shall furnish boulders similar in appearance, color, type, and approximate size as shown on Drawings or specified in the Contract Documents. No evidence of drilling, scrapes, large flakes, or cracks shall be visible after the boulder is set in place.

Article 11.3 Construction

The Contractor shall coordinate with the Engineer prior to setting boulders to ensure desired face and orientation is achieved. Boulders shall be placed on site as directed by the Engineer.

The Contractor shall form a pocket for boulder installation, ensuring that the boulder is even and true to line, buried one-third to one-half (1/3 to 1/2) of the boulder depth, and in accordance with the Standard Detail, or as shown on the Drawings.

Article 11.4 Method of Measurement

Boulders will be measured as units of the specified size complete in place.

Article 11.5 Basis of Payment

Payment for this Work shall be in accordance with Division10, Section 10.07 – Measurement and Payment, and shall include full payment for all Work described in this Section.

Payment shall be made under the following unit:

ITEM	UNIT
Boulder (Size)	Each

MUNICIPALITY OF ANCHORAGE
STANDARD SPECIFICATIONS

DIVISION 75
LANDSCAPING IMPROVEMENTS
STANDARD DETAILS

STANDARD CONSTRUCTION SPECIFICATIONS
MISCELLANEOUS
DIVISION 75
INDEX OF STANDARD DETAILS

75-1	Shrub Planting Detail
75-2	Conifer Planting Detail
75-3	Deciduous Tree Planting Detail
75-4	Boulder

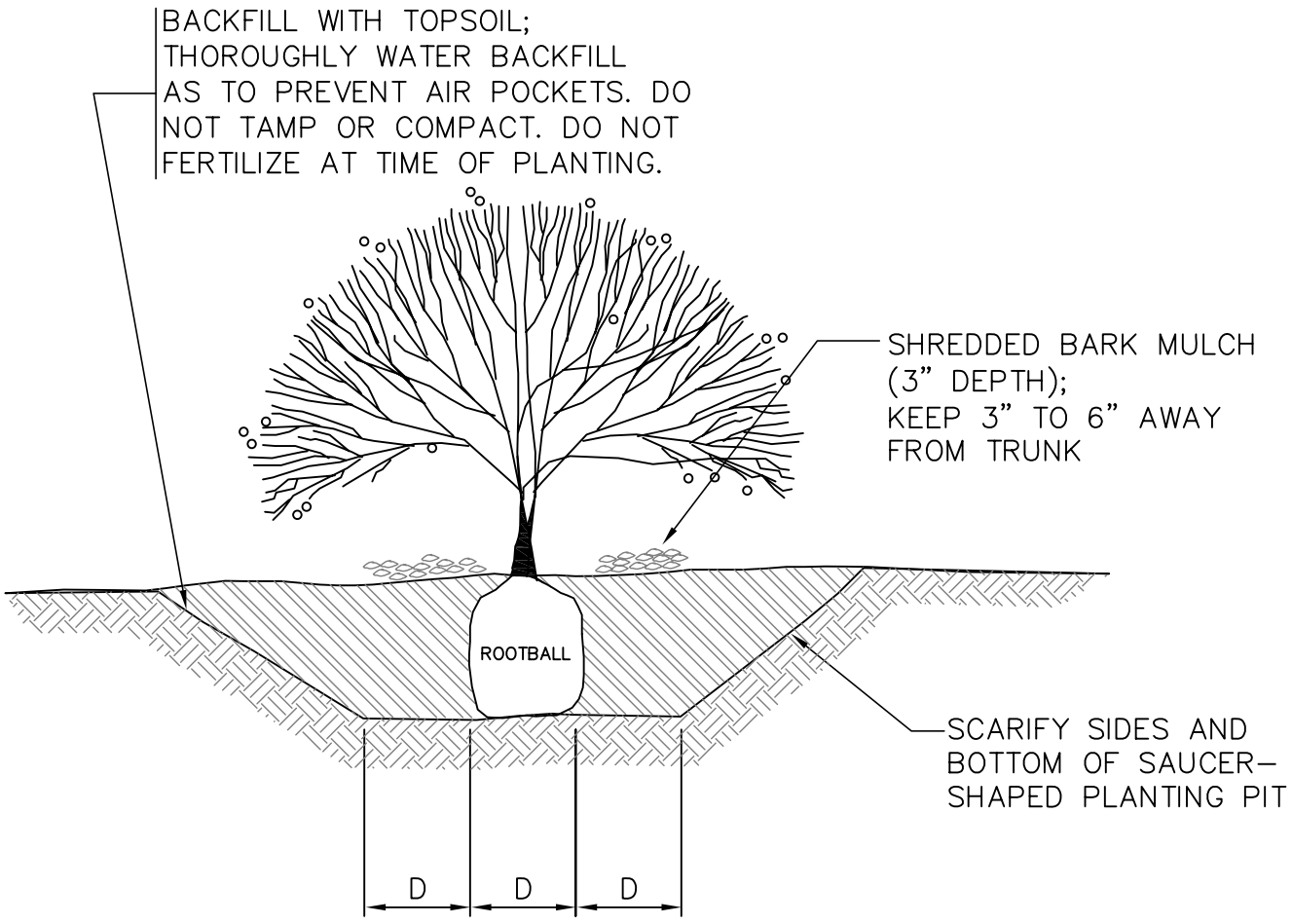

D = DIAMETER OF ROOTBALL

NOTES:

1. DEPTH VARIES DEPENDING ON ROOTBALL THICKNESS.
2. SOIL SHALL BE LOOSENED AND SUITABLE FOR ROOT GROWTH. TOP WIDTH OF PLANT PIT SHALL BE 4–5 TIMES ROOTBALL DIAMETER.

MUNICIPALITY OF ANCHORAGE	SCALE: NTS APPROVED: REVISED: 10/08	SHRUB PLANTING DETAIL	SECTION # 75.02 DETAIL # 75–1

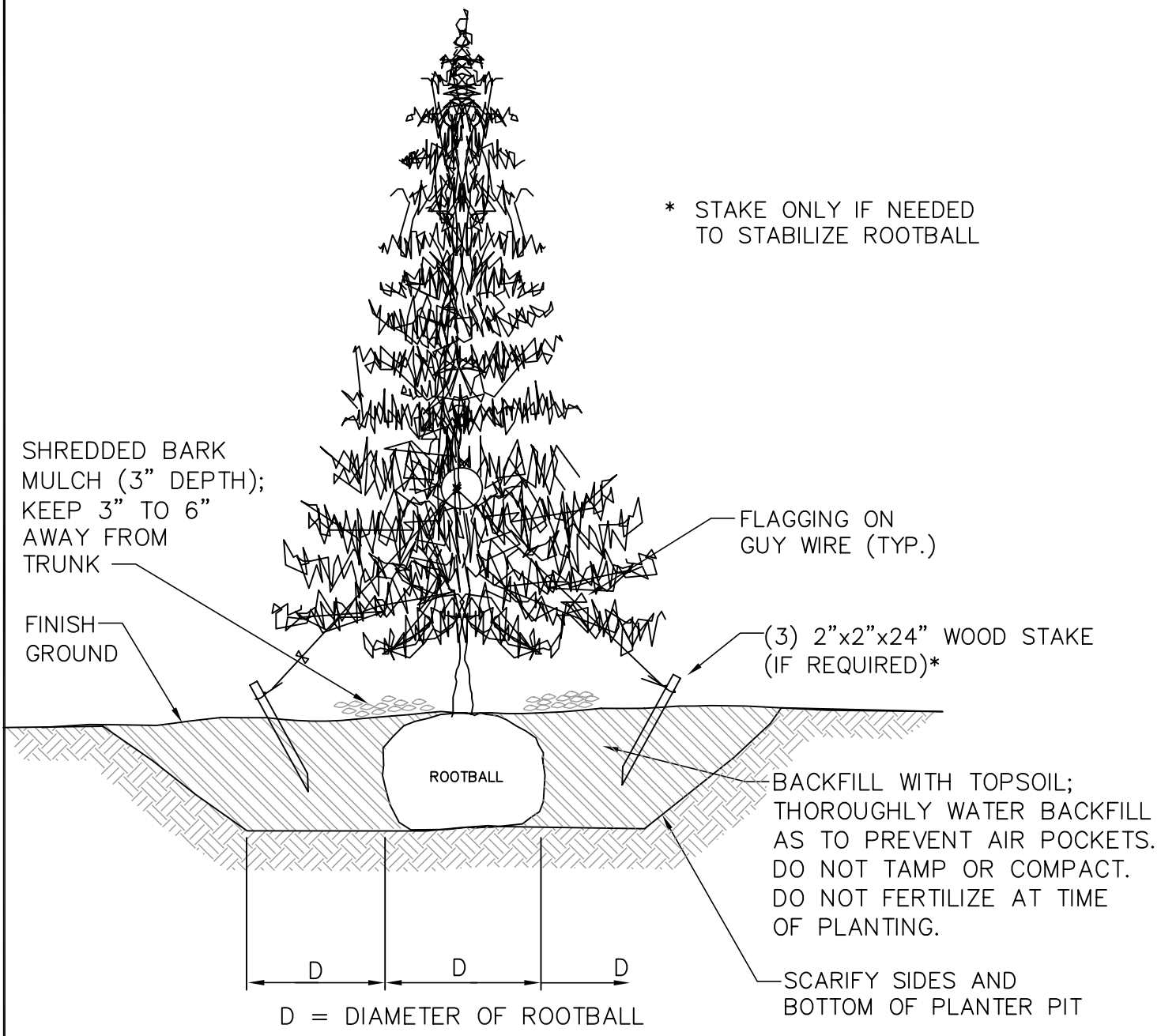

NOTES:

1. CONTRACTOR SHALL CUT BURLAP AND REMOVE A MINIMUM OF 1/2 FROM PLANTING PIT. CONTRACTOR SHALL COMPLETELY REMOVE WIRE BASKETS.
2. DEPTH OF PLANT PIT VARIES DEPENDING ON ROOTBALL THICKNESS. SOIL SHALL BE LOOSENED AND SUITABLE FOR ROOT GROWTH. TOP WIDTH OF PLANT PIT SHALL BE 4–5 TIMES ROOTBALL DIAMETER. SET ROOTBALL ON SOLID GROUND TO PREVENT SETTLING. PLANT TREE TRUNK WITH TRUNK FLARE AT OR UP TO 1" ABOVE FINISHED GROUND.
3. USE THREE 2"x2"x24" WOOD STAKES WHEN SPECIFIED ON DRAWINGS OR REQUIRED BY THE ENGINEER. EMBED AT ANGLE. DO NOT PENETRATE ROOTBALL. USE SOFT, FLEXIBLE MATERIAL FOR TIES. GUY AT APPROXIMATELY 1/3 TREE HEIGHT. REMOVE GUY AFTER ONE YEAR. DO NOT STAKE TREE RIGID, IT MUST MOVE IN THE WIND.

MUNICIPALITY OF ANCHORAGE	SCALE: NTS APPROVED: REVISED: 2/10	**CONIFER PLANTING DETAIL**	SECTION # 75.02 DETAIL # 75–2

REVISION: 2/10 EDITED ROOTBALL SIZE, MODIFIED NOTE 1, ADDED *

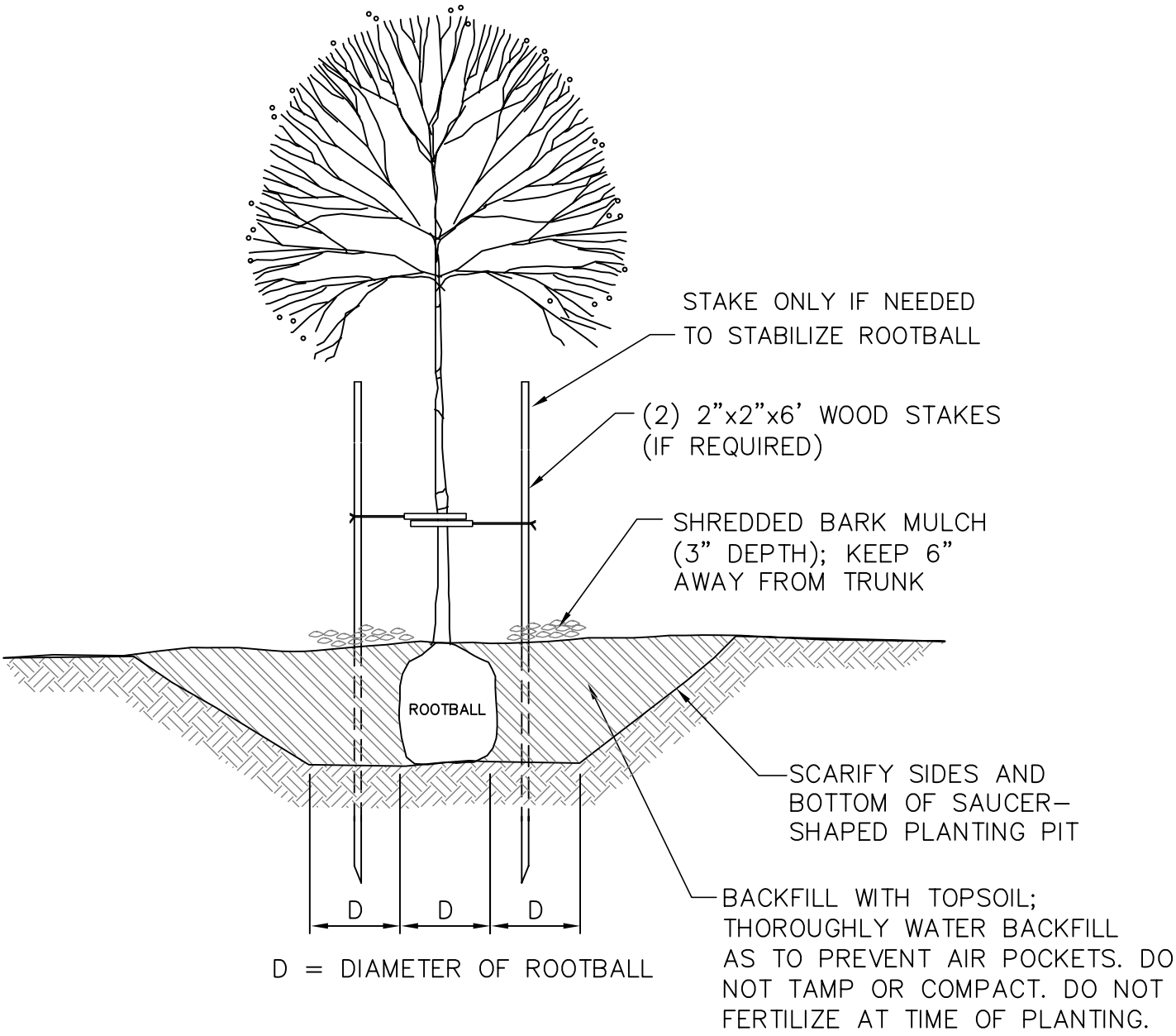

NOTES:

1. CUT BURLAP AND WIRE BASKET, PEEL DOWN, REMOVE OR LAY FLAT IN BOTTOM OF PLANT PIT. REMOVE CONTAINERS.
2. DEPTH OF PLANT PIT VARIES DEPENDING ON ROOTBALL THICKNESS. SOIL SHALL BE LOOSENED AND SUITABLE FOR ROOT GROWTH. TOP WIDTH OF PLANT PIT SHALL BE 4–5 TIMES ROOTBALL DIAMETER. SET ROOTBALL ON SOLID GROUND TO PREVENT SETTLING. PLANT TREE TRUNK WITH TRUNK FLARE AT OR UP TO 1" ABOVE FINISHED GROUND.
3. USE TWO 2"x2"x6' WOOD STAKES WHEN SPECIFIED ON DRAWINGS OR REQUIRED BY THE ENGINEER. EMBED 24" DO NOT PENETRATE ROOTBALL. USE SOFT, FLEXIBLE MATERIAL FOR TIES. GUY AT APPROXIMATELY 1/3 TREE HEIGHT. REMOVE GUY AFTER ONE YEAR. DO NOT STAKE TREE RIGID, IT MUST MOVE IN THE WIND.

MUNICIPALITY OF ANCHORAGE	SCALE: NTS APPROVED: REVISED: 10/08	**DECIDUOUS TREE PLANTING DETAIL**	SECTION # 75.02 DETAIL # 75–3

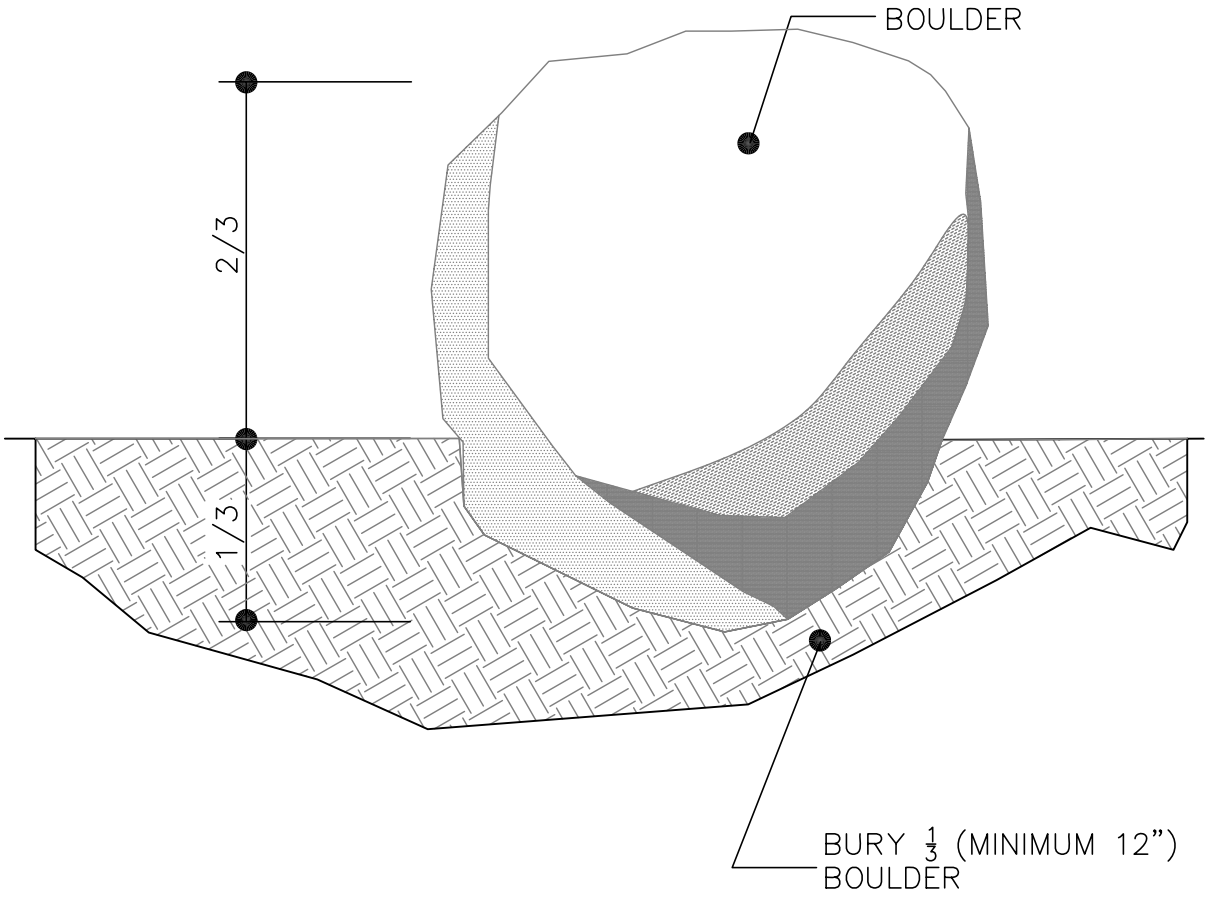

BOULDER

NOTES:

1. ORIENTATION OF BOULDERS DETERMINED ON-SITE BY THE ENGINEER.

MUNICIPALITY OF ANCHORAGE	SCALE: NTS APPROVED: REVISED: 10/08	BOULDER	SECTION # 75.11 DETAIL # 75-4

MUNICIPALITY OF ANCHORAGE
STANDARD SPECIFICATIONS

DIVISION 80
TRAFFIC SIGNALS AND ILLUMINATION

STANDARD CONSTRUCTION SPECIFICATIONS
FOR TRAFFIC SIGNALS AND ILLUMINATION
DIVISION 80
INDEX

SECTION 80.01	GENERAL	1
Article 1.1	Scope of Work	1
Article 1.2	Regulations and Codes	1
Article 1.3	Equipment List(s) and Drawings	2
Article 1.4	Warranties, Guarantees and Instruction Sheets	3
Article 1.5	Maintaining Existing and Temporary Electrical Systems	3
Article 1.6	Scheduling of Work	7
Article 1.7	Safety Precautions	7
Article 1.8	Definitions	7
Article 1.9	Signs	8
Article 1.10	Measurement	8
Article 1.11	Basis of Payment	8
SECTION 80.02	EXCAVATING AND BACKFILLING	9
Article 2.1	General	9
Article 2.2	Construction	9
Article 2.3	Sawcut Trench	9
Article 2.4	Measurement	10
Article 2.5	Basis of Payment	11
SECTION 80.03	REMOVING AND REPLACING IMPROVEMENTS	12
Article 3.1	General	12
Article 3.2	Measurement	12
Article 3.3	Basis of Payment	12
SECTION 80.04	FOUNDATIONS	13
Article 4.1	General	13
Article 4.2	Cast-In-Place Concrete Foundations	13
Article 4.3	Load Center Foundation	15
Article 4.4	Controller Cabinet Foundation	16
Article 4.5	Driven Pile Foundation	16
Article 4.6	Measurement	16
Article 4.7	Basis of Payment	17
SECTION 80.05	POLES, STEEL PEDESTALS AND POSTS	18
Article 5.1	General	18
Article 5.2	Plumbing	21
Article 5.3	Grouting for Slip-Base Poles	21
Article 5.4	Galvanizing	22
Article 5.5	Measurement	22
Article 5.6	Basis of Payment	23

SECTION 80.06 MAST ARMS 24
Article 6.1 General 24
Article 6.2 Measurement 25
Article 6.3 Basis of Payment 26

SECTION 80.07 CONDUIT 27
Article 7.1 General 27
Article 7.2 Measurement 29
Article 7.3 Basis of Payment 30

SECTION 80.08 JUNCTION BOXES 31
Article 8.1 General 31
Article 8.2 Materials 31
Article 8.3 Construction 31
Article 8.2 Measurement 32
Article 8.3 Basis of Payment 33

SECTION 80.09 EXPANSION FITTINGS 34
Article 9.1 General 34
Article 9.2 Measurement 34
Article 9.3 Basis of Payment 34

SECTION 80.10 CONDUCTORS 35
Article 10.1 General 35
Article 10.2 Control Cables 36
Article 10.3 Power Conductors and Cables 36
Article 10.4 Detector Loops and Lead-In Cables 37
Article 10.5 Telemetry Cable 38
Article 10.6 Measurement 38
Article 10.7 Basis of Payment 39

SECTION 80.11 WIRING 40
Article 11.1 General 40
Article 11.2 Measurement 42
Article 11.3 Basis of Payment 42

SECTION 80.12 FUSED SPLICE CONNECTORS 43
Article 12.1 General 43
Article 12.2 Measurement 43
Article 12.3 Basis of Payment 43

SECTION 80.13 BONDING AND GROUNDING 44
Article 13.1 General 44
Article 13.2 Measurement 45
Article 13.3 Basis of Payment 45

SECTION 80.14 LOAD CENTERS 46
Article 14.1 General 46
Article 14.2 Illumination Control 48
Article 14.3 Step Up/Step Down Transformer 50
Article 14.4 Pad-Mounted Load Center 50
Article 14.5 Post-Mounted Load Center, Type 2 - Underground Service 51
Article 14.6 Post-Mounted Load Center, Type 3 - Overhead Service 51
Article 14.7 Single-Meter Pad-Mount Load Center, Type 1 & 1A 51
Article 14.8 Measurement 51
Article 14.9 Basis of Payment 52

SECTION 80.15 WOOD POLES 53
Article 15.1 General 53
Article 15.2 Measurement 53
Article 15.3 Basis of Payment 54

SECTION 80.16 MISCELLANEOUS 55
Article 16.1 Sign Switches 55
Article 16.2 Field Tests 55
Article 16.3 Galvanizing 56
Article 16.4 Painting for Steel Structures 57
Article 16.5 Measurement 59
Article 16.6 Basis of Payment 59

SECTION 80.17 CONTROLLER ASSEMBLIES 60
Article 17.1 General 60
Article 17.2 Controller Unit 60
Article 17.3 Standard Auxiliary Equipment 96
Article 17.4 Special Auxiliary Equipment 98
Article 17.5 Controller Cabinet 110
Article 17.6 Operation 118
Article 17.7 Shop Tests 119
Article 17.8 Installation 120
Article 17.9 Measurement 121
Article 17.10 Basis of Payment 121

SECTION 80.18 VEHICLE DETECTORS 122
Article 18.1 Loop Detectors 122
Article 18.2 Optical Detectors - Preemption 125
Article 18.3 Radar Detectors 126
Article 18.4 Ultrasonic Detectors - Ultrasonic Presence Sensors 127
Article 18.5 Video Detectors 128
Article 18.6 Measurement 128
Article 18.7 Basis of Payment 129

SECTION 80.19 VEHICLE SIGNAL HEADS 130
Article 19.1 General 130
Article 19.2 Installation 131
Article 19.3 Signal Head Mounting 133
Article 19.4 Light Emitting Diode (LED) Optical Units 134
Article 19.5 Incandescent Optical Units 138
Article 19.6 Backplates 138
Article 19.7 Signal Head Mounting Hardware 139
Article 19.8 Programmed Visibility Traffic Signal Heads 140
Article 19.9 Measurement 141
Article 19.10 Basis of Payment 141

SECTION 80.20 PEDESTRIAN SIGNALS 142
Article 20.1 General 142
Article 20.2 Installation 142
Article 20.3 Mounting 143
Article 20.4 Housing 143
Article 20.5 Light Emitting Diode (LED) Pedestrian Signal Modules 144
Article 20.6 Measurement 147
Article 20.7 Basis of Payment 148

SECTION 80.21 PEDESTRIAN PUSHBUTTONS 149
Article 21.1 General 149
Article 21.2 Measurement 149
Article 21.3 Basis of Payment 149

SECTION 80.22 FLASHING BEACONS 150
Article 22.1 General 150
Article 22.2 Measurement 152
Article 22.3 Basis of Payment 152

SECTION 80.23 LUMINAIRES 153
Article 23.1 General 153
Article 23.2 Light Distribution 153
Article 23.3 Measurement 154
Article 23.4 Basis of Payment 154

SECTION 80.24 BALLASTS 155
Article 24.1 General 155
Article 24.2 Measurement 155
Article 24.3 Basis of Payment 155

SECTION 80.25 FALSEWORK LIGHTING 156
Article 25.1 General 156
Article 25.2 Measurement 157
Article 25.3 Basis of Payment 157

SECTION 80.26 INTERCONNECT CABINET 158
Article 26.1 General 158
Article 26.2 Measurement 158
Article 26.3 Basis of Payment 158

SECTION 80.27 PROTECTIVE POST ASSEMBLY 159
Article 27.1 General 159
Article 27.2 Measurement 159
Article 27.3 Basis of Payment 159

SECTION 80.28 SALVAGING ELECTRICAL EQUIPMENT 160
Article 28.1 General 160
Article 28.2 Measurement 161
Article 28.3 Basis of Payment 161

STANDARD CONSTRUCTION SPECIFICATIONS
FOR INSTALLATION AND REMOVAL OF
TRAFFIC SIGNALS AND ILLUMINATION
DIVISION 80

SECTION 80.01 GENERAL

Article 1.1 Scope of Work

Work shall consist of furnishing and installing, modifying, removing or salvaging one or more traffic signal systems, flashing beacon systems, illumination systems, sign illumination systems, traffic count stations, electrical equipment on structures, falsework lighting, partial installations for future systems, or combinations thereof, all as required by the Drawings, and as specified. All necessary labor and equipment to provide fully functioning traffic signals, intersection lighting, or roadway illumination is included.

Prior to installation of foundations, junction boxes, and conduits; Contractor shall locate and protect all new and existing underground utilities; including, but not limited to, pipelines, signal systems, thaw wires, lighting systems, storm drain, sanitary sewers, water systems, and telephone, cable television, and electrical cables. Not all of the existing utilities may be present or shown on the Drawings. Contractor shall adjust foundation, junction box, or conduit location if conflict exists with either existing utilities or proposed improvements. No additional monies is paid or owed to Contractor for the adjustment.

Materials furnished shall be new, except such used materials as may be specifically provided for on the Drawings or in the Special Provisions. Where an existing system is to be modified, the existing material shall be reused on the project, or disposed of as shown in the Drawings, or specified in the Special Provisions.

All systems shall be complete and in operation with all materials in conformance with Drawings, Specifications and the manufacturer's specifications and recommendations, at the time of final acceptance.

Article 1.2 Regulations and Codes

All material, and workmanship where applicable, shall conform to the standards of the Underwriters Laboratories, Inc., the National Electrical Code, and the National Electrical Safety Code together with local amendments. Within this Division, the term "Code" shall mean the National Electrical Code, and the National Electrical Safety Code together with local amendments.

Where applicable, all electrical equipment shall conform to the standards of the National Electrical Manufacturers Association.

The 1994 Edition of the “Standard Specifications for Structural Supports for Highway Signs, Luminaires and Traffic Signals” published by the American Association of State

Highway and Transportation Officials (AASHTO) shall be referred to in this Division as the 1994 AASHTO design criteria.

Article 1.3 Equipment List(s) and Drawings

A. The Contractor shall submit for review and approval, within thirty (30) days following award of the Contract, eight (8) collated copies of a portfolio of equipment and materials which he proposes to install. The portfolio(s) shall consist of a table of contents which includes each item's intended use(s) and the following:

1. For materials on the Approved Products List: a description that includes product name, manufacturer, model or part number, and the conditions listed for approval.

2. For materials not on the Approved Products List: catalog cuts that include the manufacturer's name, type of product, size, model number, conformance specifications, and supplemented by other data as may be required, including manufacturer's maintenance and operations manuals, or sample articles.

3. A wind stress certificate from the manufacturer of poles, signal mast arms, and luminaire arms. Contractor shall submit to the Engineer for approval the Wind Stress Certificate that includes the signed stamp of a professional engineer registered in the State of Alaska; and a statement that indicates that the poles and mast arms meet the wind and mast arm loading requirements specified in Section 80.05, Article 5.1 - General.

4. Contractor shall submit to the Engineer for approval the Materials Certifications for all lighting poles, signal poles, mast arms, connector bolts and anchor bolts, indicating that the steel and galvanizing conform to the requirements in this Division.

The Municipality will not be liable for any material purchased, labor performed, equipment used, or delay to the Work before all equipment and materials have been reviewed and approved.

B. Three (3) paper copies and two (2) electronic copies, in Adobe pdf format and AutoCAD v2006 or later format of traffic controller cabinet schematic wiring diagrams shall be submitted at the time the controllers are delivered for testing, or if ordered by the Engineer, prior to purchase. This diagram shall list all equipment installed in each cabinet and show in detail all circuits, parts, and schematic wiring. Contractor shall also provide at this time, one (1) reproducible and one (1) electronic set in Adobe pdf format of Operation and Maintenance manuals and wiring diagrams of any cabinet equipment utilized. These manuals shall show in detail all circuits and parts. Such parts shown thereon shall be identified by name or number and in such a manner as to be readily interpreted.

C. The Contractor shall prepare five (5) complete sets of red lined as-built plans which shall be kept current with the construction. These as-built plans shall detail all construction changes made to the Drawings and also include the following information on each appropriate drawing:

1. Location and depth of conduit runs.
2. Station and offset of all junction boxes.
3. Heights of signal faces and overhead signs.

Copies of such as-built plans shall be furnished at least twice a month during construction so that they may be reviewed for accuracy and completeness. The Contractor shall furnish any additional information required to clarify the as-built plans and shall correct all discrepancies. Progress payment for the signal and illumination Work completed shall not be made until accurate as-built plans reflecting the construction progress have been reviewed and deficiencies corrected.

D. Prior to final inspection of the Work, Contractor shall submit five (5) complete sets of Record Drawings to the Engineer. The Engineer will deliver one (1) copy each to Project Management & Engineering; Traffic Department, Signals Section; Traffic Signal Electronics Shop; Maintenance & Operations, Street Light Maintenance Supervisor; and attach the appropriate sheets of the fifth set in clear envelopes to the inside of each load center.

Article 1.4 Warranties, Guarantees and Instruction Sheets

Manufacturers' warranties, guaranties, instruction sheets and parts furnished with materials used in the Work shall be delivered to the Engineer.

For equipment brands and models not currently in use within the Municipality of Anchorage, a manufacturer's representative shall be present to supervise the turn on and adjustment of the signal system. In addition, the representative shall provide one workday of continuous instruction and familiarization in the operation and maintenance of the signal system.

Article 1.5 Maintaining Existing and Temporary Electrical Systems

The Contractor shall maintain the traffic signal and highway lighting systems from the time of the Notice to Proceed until the time of final acceptance except during any authorized stoppages when the Municipality of Anchorage shall assume maintenance. Temporary replacement equipment furnished by the Contractor shall be compatible with existing equipment used in the M.O.A. and approved by the Engineer. Representatives of the Contractor and the Owner shall inspect the project prior to the winter shutdown and prior to spring start-up to ascertain those items that need repair and determine responsibility for the repairs. If the project includes traffic signal Work, Traffic Signal personnel shall be included in the inspection.

The existing Traffic Signal installation may not be shutdown between 7:00 and 8:30 a.m. or 3:00 and 6:00 p.m. weekdays.

The local traffic enforcement agencies and Traffic Department, Signals Section shall be notified prior to any operational shutdown of a traffic signal system.

The Contractor and the Traffic Signal personnel shall do a walk-through inspection of the existing traffic signal system prior to commencing Work.

The Contractor shall provide temporary signalization. At no time shall a signalized intersection operate in an unsignalized mode, except for shutdown due to change over from the existing system to a temporary system, and from the temporary system to a permanent system. Temporary signal system shutdowns shall be limited to periods during normal working hours as specified in this Section, during which flag control shall be used.

The temporary signal system plan shall be submitted to and approved by the Municipal Traffic Engineer or assigned designee prior to implementation. The temporary signal plan shall equal or exceed the system being replaced or modified. That is, the plan shall not downgrade the number of signal heads, signal phases, pedestrian push buttons, etc. The temporary signal system plan shall also include the layout of the temporary intersection. The complete plan shall include intersection geometrics, lane widths, and auxiliary lane pocket lengths.

No vehicle detection will be required in a temporary system, unless called for in the Drawings and Specifications or specified by the Traffic Department. The Contractor shall coordinate all Signal Work with the Traffic Signal Section or the assigned designee at 343-8355.

The Contractor shall be responsible for maintaining any span wire temporary signal installed. The Traffic Department will not assume maintenance responsibility for span wire systems.

The Contractor shall obtain Traffic Department approval prior to turning any maintenance responsibilities over to the Traffic Department, including any maintenance required during Winter Shutdown.

The Contractor shall furnish and install all materials and miscellaneous hardware required to provide a functional traffic signal system. All materials shall conform to the requirements of the Drawings and Specifications. Temporary equipment shall be compatible with existing equipment used in Anchorage.

The temporary signal system may consist of any combination of the following:

1. The existing systems,
2. Relocation of component parts,
3. Guyed wood poles, or

4. Any portion of the permanent signal system.

Traffic signals may be suspended from messenger cables provided that they are mounted by standard span wire hangers and secured with a second cable (tether wire) to prevent misalignment in the wind. Messenger cables shall be at least three-eighths inch (3/8") O.D. "High Tensile" grade cable. Tether wire shall be one-eighth inch (1/8") O.D. steel cable installed with a minimum ground clearance of nineteen feet (19'). All signal faces shall be equipped with backplates and visors. The signal faces of each phase with two or more faces shall be energized using two (2) circuits, with each circuit wired with IMSA 20-1 signal cable. Splices shall be made only at the terminal blocks in the signal faces. Sufficient signal cable slack shall be left at each pole to provide for drip loops and to allow realignment of each signal head.

Whenever a pole of the permanent signal system is included in a span wire signal system, the Contractor shall guy the pole and provide protective collars to prevent chafe damage. Poles with breakaway bases shall not be included in a span wire supported signal system.

The Contractor shall provide illumination at all locations with preexisting lighting and at all intersections where temporary traffic signalization is specified to be provided.

The temporary facilities shall be provided during the life of the Contract on all roadways open to traffic within project limits. The temporary lighting systems shall be operational by sunset on the same day the replaced system is retired, or the roadway is opened to traffic.

A plan for each temporary lighting system shall be submitted to and approved by the Engineer prior to implementation. The temporary lighting plan shall equal or exceed the system(s) being replaced or modified. At intersections, the temporary system shall include a luminaire located on the far right for each through street approach and installed adjacent to the through street radius returns. The through street is the street with the vehicular right of way; both streets shall be considered through at signalized intersections and four-way stops.

The Contractor shall furnish and install all materials and miscellaneous hardware required to provide a functional lighting system including electrical load centers. All materials shall conform to the requirements of the Drawings and Specifications, except that the branch conductors may be triplex aluminum with messenger cable if they are installed overhead. Illumination conductors shall be sized so that the voltage at the most remote luminaire is not less than the minimum required for the ballast as recommended by the manufacturer. The Contractor shall install intermediate conductor and supports to energize luminaires at locations without electrical service.

Luminaires used in the system may be the existing fixtures or new fixtures with a light distribution compatible with the proposed lighting configuration.

The temporary lighting systems may consist of any of the following lighting pole types, or combinations thereof, provided the luminaires have a minimum of thirty feet (30') mounting height. Mounting height is the difference in elevation between the luminaire retractor and

the edge of traveled way at the same station. The existing poles may be reused if they are not utility owned. Any pole of the permanent lighting and temporary signal systems and any Contractor-supplied poles may be wood and shall meet 1994 AASHTO design criteria for one-hundred-mile-per-hour (100 mph) winds with gusts to one hundred thirty miles per hour (130 mph). All poles, except traffic signal poles, installed within the clear zone shall be provided with FHWA approved slip bases, transformer bases, or frangible couplings.

The load centers to power the temporary lighting and signal systems may be the permanent installations, the existing installations, or temporary installations. The existing load centers may be used only if they are scheduled to remain intact until completion of the project, and reused only if they are approved. The Contractor shall provide approved temporary load centers with photoelectrically-controlled lighting circuits whenever a load center is unavailable for use, or when an existing load center that is not approved is retired due to conflict with the Work. An approved load center is any load center UL labeled as Service Equipment, or UL labeled as Industrial Control Equipment and marked ”suitable for use as service equipment.” The Contractor shall provide all Work to modify these load centers as required to provide functional temporary lighting and signal systems, and to install them completing all Work in accordance with the NEC.

Once the Contractor commences Work on the project, he shall provide all maintenance for the existing electrical facilities. The Municipality will pay for the electrical power for the above-mentioned electrical systems. The above maintenance does not include any prior damage such as burned out lamps, non-operative detection or other malfunctioning equipment. The Contractor shall present written documentation of all non-functioning and malfunctioning electrical equipment before commencing Work on the project. This malfunctioning equipment shall be inspected jointly by personnel from the Engineer’s staff and the Contractor. In the event the Engineer does not receive notice in writing and the Contractor begins Work on the project, this will suffice as evidence that all equipment is functional and operational.

The Contractor shall furnish the Engineer with the name and phone number of the person responsible for maintaining existing and temporary electrical facilities. Repair work shall commence within one hour of notification for traffic signal systems.

The exact location of existing conduit runs, direct burial cable, pull boxes, and all underground utilities shall be ascertained by the Contractor before using equipment that may damage such facilities or interfere with any system.

Where roadways are to remain open to traffic and existing lighting systems are to be modified, the lighting systems shall remain in operation and the final connection to the modified circuit shall be made so that the modified circuit will be in operation by nightfall of the same day the final connection is made.

Temporary electrical installations shall be kept in effective operation until no longer required. Removal of temporary installations shall conform to the provisions in Section 80.28 – Salvaging Electrical Equipment.

These provisions will not relieve the Contractor in any manner of his responsibilities as provided in Division 10, Section 10.06 - Legal Relations and Responsibilities.

Article 1.6 Scheduling of Work

Work shall be so scheduled that each new traffic signal system, highway lighting system, and sign illumination system shall be completed and ready for operation prior to opening to traffic of the corresponding section of new alignment.

Traffic signal systems shall not be placed in operation without energizing the street lighting at the intersection to be controlled if street lighting exists or is being installed with the traffic signals.

Contractor shall not place traffic signal systems into operation. Traffic Signal personnel are the only persons authorized to turn on a traffic signal.

Conductors shall not be pulled into conduit until pull boxes are set to grade, crushed rock sumps installed, grout placed around the conduit, and metallic conduit bonded.

In vehicular undercrossings, soffit lights shall be placed in operation as soon as practicable after falsework has been removed from the structure. Lighting for pedestrian structures shall be placed in operation prior to opening the structure to pedestrian traffic.

If the Engineer orders soffit lights or lighting for pedestrian structures placed in operation before permanent power service is available, the cost of installing and removing temporary power service will be paid for as extra Work as provided in Division 10, Sections 10.05 – Control of Work and 10.07 – Measurement and Payment.

Article 1.7 Safety Precautions

Before starting Work on existing series street lighting circuits, the Contractor shall obtain daily, a safety circuit clearance from the serving utility. By-pass switch plugs must be pulled and suitable signs posted at switch boxes before electrical Work begins.

Suitable signs shall be posted at Load Centers when a contractor is working on any of the circuits from that Load Center.

Article 1.8 Definitions

The Definitions in NEMA TS-2, Traffic Controller Assemblies with NTCIP Requirements Version 02.06, shall be used along with the following:

1. Electrolier: The complete assembly of pole, mast arm, luminaire, ballast, and lamp.
2. Luminaire: The assembly which houses the light source and controls the light emitted from the light source. Luminaires consist of hood (including socket), reflector, and glass globe or refractor.

3. Lighting Standard: The pole and mast arm which must support the luminaire.

4. Vehicle: Any motor vehicle licensed for highway use by the State of Alaska.

5. Controller Unit: The solid-state device as described in Section 80.17, Article 17.2 – Controller Unit.

6. Controller Cabinet: A cabinet constructed, wired and equipped as described in Section 80.17, Article 17.5 - Controller Cabinet.

7. Controller Assembly. The controller cabinet, controller unit and the equipment described in Section 80.17. The controller assembly shall also be functioning in accordance with Section 80.17, Articles 17.1- General and 17.6 - Operation.

8. Anchor bolts apply to Luminaire poles and anchor rods apply to Signal poles. They are used interchangeably in this Division.

Article 1.9 Signs

Reference Division 70, Section 70.11 – Standard Signs.

Article 1.10 Measurement

All Work in this Section shall be measured by lump sum and shall consist of all labor, materials, and equipment necessary to provide temporary signalization and temporary illumination.

Article 1.11 Basis of Payment

Payment for this Work shall be in accordance with Division 10, Section 10.07 - Measurement and Payment, and shall include full payment for all Work described in this Section.

Payment shall be made under the following units:

ITEM	UNIT
Temporary Signalization	Lump Sum
Temporary Illumination	Lump Sum

SECTION 80.02 EXCAVATING AND BACKFILLING

Article 2.1 General

The excavations required for the installation of conductors, conduits, foundations and other appurtenances shall be performed in such a manner as to avoid any unnecessary damage to the streets, sidewalks, landscaping, and other improvements. The trenches shall not be excavated wider than necessary for the proper installation of the electrical appurtenances and foundations. Excavation shall not be performed until immediately before installation of conduit and other appurtenances. The material from the excavation shall be placed in a position that will not cause damage or obstruction to vehicular and pedestrian traffic nor interfere with surface drainage.

Trench, backfill, and disposal of surplus material shall be performed in accordance with Division 20 – Earthwork .

Excavations after backfilling shall be kept well-filled and maintained in a smooth and well-drained condition until permanent repairs are made.

All excavations shall be filled, and sidewalks, pavement, and landscaping restored at each intersection prior to excavating at any other intersection. Excavations in the street or highway shall be performed in such a manner that not more than one traffic lane is restricted in either direction at any time, unless otherwise provided in the Special Provisions.

Article 2.2 Construction

The Contractor shall excavate the trench to the proper depth as described herein and as shown on the Drawings.

The excavations shall be backfilled with material suitable to the Engineer. All backfill placed in the roadway area shall be Type II-A classified backfill as specified in Division 20,. Section 20.21, Article 21.2 - Material. All backfill material shall be placed in uniform layers of not more than six inches (6”) in depth and compacted to a density of not less than ninety-five percent (95%) of the maximum density as directed by the Engineer.

The Contractor shall be responsible for the restoration of all surfacing, turf, and native material to the original condition and appearance.

Article 2.3 Sawcut Trench

Where shown on the Drawings, or as directed by the Engineer, the Contractor shall construct a sawcut trench as detailed in the Drawings. A sawcut trench will be used to cross existing traveled lanes, existing curb and gutter, in median islands, along edges of paved roadways, and in sidewalk areas where a neat cut of the surfacing is required.

The Contractor shall cut the surfacing material full-depth and remove the surfacing material to expose the subgrade materials. The Contractor shall then excavate a trench, dispose of excess and waste materials, and install conduit as described herein.

In sawcuts of asphalt pavement located within the roadway pavement, Contractor shall remove a minimum distance of one foot (1') back from the edge of the trench, on each side of the trench. Contractor shall remove pavement such that cuts parallel to the direction of travel are not located within the wheel paths.

The entire trench shall be backfilled as specified herein, except non-frost-susceptible sand bedding material shall be used.

The existing surface shall then be restored with like pavement in accordance with Section 40.07 - Remove and Replace Existing Asphalt Surfacing; Section 40.06 - Tack Coat; Section 30.03 - Portland Cement Concrete Sidewalks; or Section 30.02 Portland Cement Concrete Curb and Gutter, and Valley Gutter, as applicable.

Where applicable, asphalt tack coat shall be applied to all edges of the existing pavement prior to placing new asphalt. Asphalt pavement less than three inches (3") in thickness shall be placed in one lift, and asphalt pavement three inches (3") and greater in thickness shall be placed in a minimum of two equal lifts.

In median islands, the Contractor may elect to remove and replace the entire surface of the island along the length of the conduit run. If the Contractor elects to remove the entire surface of the island, the Work shall still be considered as sawcut trenching. The layer of pavement under the median islands, if encountered (normally at the street pavement grade), may be broken out.

The Contractor shall be responsible for the restoration of all surfacing, turf, and native material to original condition and appearance.

Article 2.4 Measurement

Measurement for trench and backfill and for sawcut trench shall be per linear foot of horizontal distance of the various widths and depths as set forth in the Bid Schedule. Measurement will be from station to station or from center of device to center of device as staked in the field and as shown on the Drawings.

Article 2.5 Basis of Payment

Payment for this Work shall be in accordance with Division 10, Section 10.07 - Measurement and Payment, and shall include full payment for all Work described in this Section.

Work not specifically identified for payment under a separate pay item, but required for normal completion of trench and backfill, will be considered incidental and shall be included in the linear foot cost of the trench. Sawcut trench includes removing existing pavement, trench and backfill, and replacing pavement.

Payment shall be made under the following units:

ITEM	UNIT
Trench and Backfill (Width) (Depth)	Linear Foot
Sawcut Trench (Width) (Depth)	Linear Foot

SECTION 80.03 REMOVING AND REPLACING IMPROVEMENTS

Article 3.1 General

Improvements such as sidewalks, curbs, gutters, Portland cement concrete and asphalt concrete pavement, base material, lawns and plants and other improvements removed, broken or damaged by the Contractor's operations, shall be replaced or reconstructed with the same kind of material as found on the Work or with materials of equal or better quality. The new Work shall be left in a satisfactory serviceable condition.

Whenever a part of a square or slab of existing sidewalk, curb and gutter, or driveway is broken or damaged, the entire square, section or slab shall be removed and the concrete reconstructed as above specified.

The outline of all areas to be removed in concrete sidewalks and driveways and in pavements shall be cut to a minimum depth of one and one-half inches (1 1/2") with an abrasive type saw prior to removing the sidewalk, driveways, and pavement material. The cut for the remainder of the required depth may be made by a method satisfactory to the Engineer. Cuts shall be neat and true with no shatter outside the removal area.

When a foundation is to be abandoned in place, the top of foundation, anchor bolts, and conduit shall be removed to a depth of not less than one foot (1') below surface of sidewalk or unimproved ground. The resulting hole shall be backfilled with material equivalent to and compacted to the density of the surrounding material.

Article 3.2 Measurement

All Work under this section is incidental to other Work and will not be measured or paid for directly.

Article 3.3 Basis of Payment

No separate payment will be made for this item.

SECTION 80.04 FOUNDATIONS

Article 4.1 General

All foundations for poles, posts and pedestals shall be cast-in-place Portland Cement Concrete or driven pile.

Unless otherwise shown on the Drawings, all items to be relocated shall be provided with new foundations and anchor bolts of the proper type and size.

The Contractor shall be responsible for contour grading around all post, pole, and pedestal foundations. Final or finished grading shall be such that the earth shall be two inches (2") below the top of the base and drain away from the base.

Foundations for poles shall be designed for one-hundred-mile-per-hour (100-mph) winds with gusts to one hundred thirty miles per hour (130 mph) in conformance with the requirements of the 1994 AASHTO design criteria.

Cabinet foundations shall be precast.

The entire controller foundation and the top twelve inches (12") of pole or post foundations shall be formed and the top given a smooth steel trowel finish. Conduits shall be located in the center of the pole-post foundations with clearance allowed for bushings.

The tops of all pole foundations shall be set so that the bottom center of the base plates are between four (4") and six inches (6") above finished grade at the pole's offset. The top of any foundation located on a slope shall be constructed such that the finished slope passes through the top center of the uphill edge of the foundation. The area two feet (2') up and down slope of the edge of the foundation shall be graded so that no portion of the foundation projects above the surrounding slope and so that water will drain away from the foundation.

The Contractor shall field-verify pole foundation stationing and elevations prior to pouring the foundations, to insure that the final locations of the signal heads and mast arms meet the requirements of the Drawings and Specifications. The field-verification includes checking to insure that the heads will be the proper distance above the roadway surface, and mast arms will be of adequate length to place heads and signs in the right locations. Any discrepancies shall be reported to the Traffic Engineer prior to pouring the foundation.

Article 4.2 Cast-In-Place Concrete Foundations

The Contractor shall use a minimum 16 gauge corrugated steel pipe (CSP) form to cast concrete foundations in place. The Contractor shall over excavate the area around the form enough to allow for proper compaction. The backfill operation shall conform to the requirements of Division 20, Section 20.19 – Furnish Foundation Backfill. Contractor shall obtain approval from the Traffic Engineer prior to use of any material that is not specifically identified in Furnish Foundation Backfill. Substitution requests for alternate material, including any flowable fill, shall be designed to produce a comparable

compressive strength to the surrounding soil after hardening. The use of water for drilling operations or for any other purpose where it may enter the hole is not permitted.

Concrete shall be Class AA-3 Portland Cement conforming to Division 30 – Portland Cement Concrete.

Reinforcing steel and wire fabric shall conform to the requirements of Division 30, Section 30.01, Article 1.3 - Materials and Section 80.05 – Poles, Steel Pedestals and Posts. Reinforcement shall be placed and fastened in conformance with Division 30, Section 30.05, Article 5.2 - Construction, except that bars to be spliced shall be lapped at least fifty (50) bar diameters. Where bar spacing is less than one (1) foot in each direction, the Contractor may tie alternate intersections.

Drilled holes or forms shall be vertical, and true to the locations shown in the Drawings. Upon completion of excavation for a foundation, and prior to the placement of concrete, all loose material shall be removed in order that the foundation rests on firm, undisturbed ground.

Forms, if indicated or required, shall be true to line and grade, with the top of the foundation at the established elevation.

Conduit shall be included in all concrete foundations for wire and cable entry as shown on the Drawings as required to complete the Work. The conduit in pole or post foundations shall extend four inches (4") above the foundation (but not above the slip base adapter) and shall be sloped towards the hand-hole opening. These conduits shall exit the foundations in the top center of the foundation surface.

The reinforcing steel cage, if required, shall be placed and secured symmetrically about the vertical axis and shall be securely blocked to clear the sides of the foundation. Anchor bolt assemblies and conduit ends and reinforcing bar assemblies shall be securely supported by templates. Each anchor bolt shall have two (2) nuts and two (2) washers.

Anchor bolts, nuts and washers shall conform to ASTM ,F1554 with grade as specified by manufacturer, and shall be hot-dip galvanized after fabrication in accordance with ASTM A153. Anchor bolts for signal mast arm foundations shall conform to ASTM F1554. The grade of steel shall be as specified by the pole manufacturer, for the loading specified in Section 80.05, Article 5.1 - General. The exposed end of all anchor bolts used for signal mast arm poles shall be clearly stamped with the appropriate markings so that the type of bolts used in the foundation can be clearly determined after construction, per ASTM F1554 supplementary requirements S2 and S3. Signal mast arm foundation anchor bolts shall conform to Charpy Impact Requirements at -20°F, per supplementary requirement S5.Anchor bolts may not be field cut or bent. Damage to galvanized surfaces as a result of damage during shipping or construction activities shall be repaired in accordance with Section 80.16, Article 16.3 - Galvanizing.

Material certifications for all anchor bolts shall be submitted to the Traffic Engineer or designated representative prior to acceptance of the foundations for payment.

Reinforcing bars shall be formed into cages and all intersections tied with #14 AWG steel wire. The cages shall be accurately held in position during placing and setting of

the concrete. All reinforcing bars shall be bent cold in as smooth a curve as possible and shall conform to standard practice of the WCRSI. Reinforcing steel shall not be welded except as shown in the construction detail Drawings.

All reinforcing steel shall have a minimum of one inch (1") of concrete cover for controller cabinet and load center foundations, and three inches (3") of cover for signal pole and luminaire foundations.

Surface water shall not be permitted to enter the hole and all water which may have infiltrated in the hole shall be removed before placing concrete. Both forms and ground shall be thoroughly moistened before placing concrete. Each foundation shall be poured in one continuous pour.

Posts, poles and pedestals shall not be erected or placed on the foundation until ten (10) days after placement of the concrete. If the Engineer approves Type III Portland High-Early-Strength Cement Concrete, then posts, poles and pedestals may be placed on foundations four (4) days after placement of the concrete. Plumbing shall be accomplished by adjusting the nuts on the anchor bolts. Shims or other similar devices for plumbing or raking are not permitted.

After each slip-base post, pole or pedestal is in position, grout conforming to Section 80.05, Article 5.3 – Grouting for Slip-Base Poles, shall be placed under the base plate as shown on the Drawings, and shaped to present a neat appearance. Contractor shall install metal skirting on all non-slip-base posts, poles, or pedestals.

Attach a #4 AWG, bare, copper wire as a grounding electrode conductor to the #4 spiral bar in the reinforcing steel cage. Use two irreversible compression connectors to make the attachment. Protect the attachment during concrete placement. In foundations that lack reinforcing steel cages, install 21 feet of coiled #4 AWG, bare, copper wire as the grounding electrode. Route the conductor to protrude near the top, center of the foundations. Slide a minimum six inch (6”) long, PVC or HDPE, protective sleeve over the conductor. Allow one inch (1”) of the sleeve and twenty-four inches (24”) of conductor to protrude from the foundations.

Install anchor bolds and rods plumb. Anchor bolts and rods greater than 1:40 out of plumb will result in rejection of foundation. Contractor shall reconstruct rejected foundations at no additional expense to Owner.

Article 4.3 Load Center Foundation

Excavate sixty inches (60") for base and install eighteen inches (18") of coarse aggregate for drain. Backfill above gravel in six inch (6") lifts with non-frost-susceptible material, compacting to ninety-five percent (95%) in accordance with Division 20 – Earthwork.

Install base so that cast-iron cover is flush with pavement, sidewalk, or finished grade. Slope grade away from base with minimum slope of three percent (3%). Use a pre-molded bituminous joint between base and concrete sidewalk or paving.

Install a three-quarter inch by ten foot (3/4"x10') copper clad ground rod inside the base, readily accessible through the removable steel cover. Install an additional external

three-quarter inch by ten foot (3/4"x10') copper clad ground rod eight feet (8') from the load center, and additional ground rods as required by Code or the electrical utility.

Connect cast-iron cover of load center base to the ground rod with six feet (6') of copper braid with eyelets every six inches (6") and approved connectors.

Access opening shall be finished with a twenty-four inch (24") square iron frame and cover, approximately 280 pounds total weight, as provided by Olympic Foundry, Part No. SM70 or approved equivalent.

Install four (4) each, three-quarter inch (3/4") ferrule loop inserts for lifting, two (2) on each long side.

Provide one inch (1") chamfer on all exposed concrete edges.

For two-piece units, seal joint with pre-molded plastic bituminous type joint sealer.

Article 4.4 Controller Cabinet Foundation

Contractor shall install controller cabinet foundation in conformance with Standard Details 80-5, 80-6, 80-7, and 80-8. The top surface of controller cabinet foundations shall be eighteen inches (18") above finished grade and provided with a one inch (1") diameter drain hole connected to the cabinet interior and emptying above the ground line. All conduits shall be placed in the front half (door side) of the foundation to provide adequate wiring terminal block clearances.

Controller cabinet anchor bolts shall be as recommended by cabinet manufacturer and set with a template. Install a three-quarter inch by ten foot (3/4"x10') copper clad ground rod inside the base, readily accessible through the removable steel cover.

Controller cabinet foundations shall be installed in accordance with Section 80.04, Article 4.3, SubArticles 1, 2, 6, 7 and 8.

Article 4.5 Driven Pile Foundation

Contractor shall supply drive pile foundations shall be of the size and length indicated. Contractor shall ensure that the top surface of the anchor plate is three inches (3") above finished grade at luminaire pole locations and five inches (5") above finished grade for signal poles, or as indicated in the Drawings.

After welding on the pile cap adapter and anchor plate to the driven steel pile, Contractor shall cold galvanize the pile cap, the pile cap adapted, anchor plate, and the top three feet (3') of the steel pile including pile cap and anchor plate. Contractor shall furnish galvanization that complies with Federal Specification DOD-P-210354A (Galvanizing Repair Spec) and is U.L. listed. Contractor shall prepare steel surfaces and apply the cold galvanizing compound in accordance with the manufacturers' recommendations. Five days prior to applying the cold galvanizing compound, Contractor shall provide the Engineer a copy of the manufacturers' instructions.

Article 4.6 Measurement

Foundations will be measured as units, complete and in place.

Article 4.7 Basis of Payment

Payment for this Work shall be in accordance with Division 10, Section 10.07 - Measurement and Payment, and shall include full payment for all Work described in this Section.

Payment will be made under the following units:

ITEM	UNIT
Cast-In-Place Luminaire Pole Foundations	Each
Driven Pile Luminaire Pole Foundations	Each
Controller Cabinet Foundation (Type)	Each
Signal Mast Arm Pole Foundation	Each
Signal Pedestal Pole Foundation	Each
Pedestrian Pushbutton Pole Foundation	Each
Load Center Foundation (Type)	Each
Driven Pile Signal Pole Foundation	Each

SECTION 80.05 POLES, STEEL PEDESTALS AND POSTS

Article 5.1 General

All traffic signal and street lighting poles and arms shall be designed in accordance with the requirements of the 1994 AASHTO design criteria. Minimum Design wind velocity shall be the greater of one-hundred miles per hour (100 mph) or the AASHTO recommendation based upon a fifty (50) year mean recurrence interval dependent upon project location. A factor of 1.3 shall be used in design calculations to account for wind gusts. The minimum design loading for signal mast arm poles shall be as follows:

Load #	Description	Weight (Lbs)	Projected Area (Ft^2)	Centerline Distance From End of Arm (Ft)
1	Sign	65	7.5	0.5
2	Signal	80	14.7	3.5
3	Signal	60	8.7	14
4	Sign	80	26	25 (See note 1)
5	Signal	60	8.7	35 (See note 2)
6	Signal	125	7.6	See note 3
7	Street Name Sign		2.0	See note 4
8	Street Name Sign		2.0	See note 4

Notes:

1. Mast arms shorter than twenty-six feet (26') in length may disregard load #4.
2. Mast arms shorter than thirty-six feet (36') in length may disregard load #5.
3. Load #6 shall be shaft mounted fourteen feet (14') from the base of the pole.
4. Load #s 7 and 8 are shaft mounted twelve feet (12') from the base of the pole.

Should project plan loading develop shear or moments greater than those related to the above loading, special design poles are required. These "Special Design" poles should be designed per the Drawings. All "Special Design" or Type SD poles will require calculation submittal to the Engineer prior to approval for use on the project.

The design for luminaire poles shall include a traffic sign with an area of twelve (12) square feet, located with its centroid nine feet (9') above the base of the pole.

Manufacturer's design calculations and wind stress certification letter shall be submitted to the Traffic Engineer or designated representative prior to approval of all signal poles and mast arms. Such certification shall include the stamp of a registered professional engineer. It shall list the pole numbers and the name of the project, and state that all poles

and mast arms meet or exceed the ability to support the minimum loads specified in Section 80.05, Article 5.1 - General.

Pre-approval of designs is available for poles meeting minimum design loading conditions. Pre-approval is not available for Special Design Poles. Pre-approval of submitted designs shall be at the sole discretion of the Traffic Engineer. Withdrawal of pre-approval may occur at anytime at the sole discretion of the Traffic Engineer. All design calculation submittals shall include the stamp of a Professional Engineer registered in the State of Alaska.

Use of non-compact sections shall not be allowed for any signal mast arm pole or arm. No exceptions shall be made.

All steel and iron products which are incorporated into poles, including connection and anchor bolts, shall be manufactured in the United States. All manufacturing processes starting with initial mixing and melting through the final shaping, welding and coating processes must be undertaken in the United States. Manufacturing includes smelting, rolling, extruding, machining, bending, grinding, drilling, painting and galvanizing. This does not apply to raw materials such as iron ore, pig iron, and processed, pelletized and reduced iron ore.

Material certifications for all poles, mast arms, bolts, steel plates and sheet steel shall be submitted to the Traffic Engineer or designated representative prior to acceptance of the poles and mast arms for payment. All mast arm connection bolts shall meet ASTM A325 and be galvanized in accordance with ASTM A153.

The Contractor shall verify the shaft lengths and mast arm connector plate locations of all poles to insure the Drawing mounting heights of luminaires and traffic heads are met. Traffic Signal personnel shall be allowed to perform an inspection of the poles in conjunction with review of submittals.

Poles less than fifteen feet (15') in length shall be round or multisided (greater than sixteen [16] sides), and constructed of No. 11 or heavier U.S. standard gauge steel or four inch (4") standard (Schedule 40) pipe or conduit, with the top designed for a post-top slip-fitter. Standard pipe shall conform to the specifications of ASTM A53. The tops of tapered poles shall have a four and one-half inch (4 1/2") outer diameter. Pedestrian pushbutton posts shall be constructed of two and one-half inch (2 1/2") standard (Schedule 40) pipe and meet the requirements of ASTM A53. Multi-sided poles shall not be used without prior approval of the Traffic Engineer.

Poles fifteen feet (15') or longer shall be round or multisided and fabricated from sheet steel of weldable grade.

Poles may be fabricated of full-length sheets or shorter sections. When two pieces are used, the longitudinal welded seams shall be directly opposite one another. When the sections are butt-welded together, the welded seams on adjacent sections shall be placed to form continuous straight seams from base to top of pole.

Poles, prior to installation, shall be straight, with a permissive variation in sweep not to exceed one-quarter inch (1/4”) per ten feet (10’) of pole length.

A backing plate consisting of a metal sleeve shall be provided at all butt-welded, transverse joints. The sleeve shall be No. 12 U.S. standard gauge steel minimum, and made from steel having the same chemical composition as the steel in the pole.

The metal sleeve shall have a minimum length of three inches (3”). The sleeve shall be centered at the joint and have the same taper as the pole outside the sleeve in full contact with the inside of the standard throughout the sleeve length and circumference. The weld metal at the transverse joint shall extend to the sleeve, making the sleeve an integral part of the joint. In round poles, standard steel pipe or tubing may be substituted for the tapered backing sleeve, at the discretion of the Engineer.

All welds shall be continuous. All welding practices shall conform to current AWS Code, AWS D1.1, latest edition.

All exposed welds, except fillet welds shall be ground flush with the base metal.

All exposed edges of the plates which make up the base assembly shall be finished smooth, and all exposed corners of such plates shall be neatly rounded to one and one-half inch (1 1/2”) radius, unless otherwise shown on the Drawings. Anchor holes in the base plate shall be round. Slotted holes shall not be used. Slotted shafts shall be provided with slip-fitter shaft caps of either galvanized steel or cast aluminum.

Non-Destructive Testing (NDT) may be required by the Traffic Engineer on all newly manufactured poles for this project, prior to galvanization. A licensed technician shall perform all testing. NDT shall take the form or Magnetic Particle or Ultrasonic testing, and be performed as described in the current AASHTO standard. If required all NDT reports shall be submitted prior to acceptance for payment.

No exception to the practices mandated by AASHTO shall be allowed.

Poles shall not be relocated or re-used unless Contractor obtains written approval of the Traffic Engineer or designated representative. Damage to the galvanized or painted surface of existing poles to be relocated or reused in place shall be repainted in accordance with Section 80.16, Article 16.3 – Galvanizing or Article 16.4 – Painting for Steel Structures, as appropriate. Holes greater than five-eighths inches (5/8”) in diameter in the shafts of existing poles, due to removal of equipment, shall be repaired. Holes shall be repaired by tapping the hole, coating all exposed edges with zinc rich paint, and plugging the hole with a screw-in type steel plug of the correct size. The plug shall be galvanized, or shall be completely covered with zinc rich paint. Holes less than five-eighths inch (5/8") diameter shall be ground smooth so there are no notches or cracks, and coated with zinc rich paint. Plugging holes and repainting damaged galvanized or painted surfaces shall be incidental to other Work.

Extent of additional repairs or replacements will be determined by the Traffic Engineer or designee, and said repairs or replacements ordered will be paid for as extra Work as provided in Division 10, Sections 10.05 – Control of Work and 10.07 – Measurement and Payment.

New steel posts, poles, and mast arms shall be hot-dip galvanized after fabrication in conformance with the ASTM A123. Any damage to the galvanized surfaces that occurs during shipping, or during the construction process, shall be repainted in accordance with Section 80.16, Article 16.3 - Galvanizing or Article 16.4 – Painting for Steel Structures, as appropriate, prior to final acceptance of the poles and mast arms.

All poles and arms shall have permanent identification tags, readily visible, that identify each pole and arm. One tag shall be mounted at the base of the pole shaft and one tag shall be mounted at the base of the mast arm. The tag shall list the following information:

Pole Number

Shaft Length

Mast Arm Length

Pole Type (SD if applicable)

Date of Manufacture

Manufacturer Name.

Luminaire Arm Length

Manufacturer Order Number

Article 5.2 Plumbing

Plumbing shall be accomplished by adjusting the nuts on the anchor bolts prior to grouting. A slight raking of the pole will be provided by plumbing the side away from the road. Shims or other similar devices for plumbing or raking will not be permitted.

Article 5.3 Grouting for Slip-Base Poles

The Contractor shall use a premixed grout having a minimum twenty-eight (28) day compressive strength of four thousand pounds per square inch (4000 psi). Proprietary grout mixtures shall be utilized in accordance with the recommendations of the manufacturer.

Concrete areas to be in contact with the grout shall be cleaned of all loose and foreign matter that would in any way prevent bond between the mortar and the concrete surfaces.

Contractor shall not grout unless ambient temperature will remain a minimum temperature of forty-five degrees Fahrenheit (45°F) for three days after grouting. All improperly cured or otherwise defective grout shall be removed and replaced at the Contractor's expense. No load shall be placed on the grout until it has set for at least ninety-six (96) hours.

For concrete bases, after each post, pole or pedestal is in position, grouting conforming to this Article shall be placed under the base plate as shown on the Drawings, and shaped to present a neat appearance.

Article 5.4 Galvanizing

All signal poles, mast arms, and pedestal poles shall be hot dipped galvanized in accordance with Section 80.16, Article 16.3 – Galvanizing.

Article 5.5 Measurement

Fixed-base luminaire poles shall be measured as units complete and in place, including all hardware, all wiring within the poles, and grouting of the base.

Direct-bedded luminaire poles shall be measured as units complete and in place, including all hardware and all wiring within the poles.

Slip base luminaire poles shall be measured as units complete and in place, including slip base adapter, all hardware, and all wiring within the pole.

Signal mast arm poles and signal pedestal poles shall be measured as complete and installed with all hardware, all wiring within the pole, and either grouting of the base or base plate skirt as appropriate.

Combination signal-luminaire poles shall be measured as complete and installed with all hardware, luminaire brackets, all wiring within the pole, and base plate skirt.

Pedestrian push button poles shall be measured as complete and installed with all hardware, all wiring within the pole, and grouting of the base.

All luminaires, luminaire arms, signal heads, pedestrian signal heads, pedestrian pushbutton assemblies, signal mast arms, signs and optical preemption detectors shall be installed and accepted when poles are measured for payment, but shall not be included in payment for poles. These items shall be considered separate pay items, and measured under the appropriate Sections of these Specifications. All other hardware, including wiring within the pole and grouting of the base, shall be considered incidental to the pay items for poles, and shall not be measured for payment.

Article 5.6 Basis of Payment

Payment for this Work shall be in accordance with Division 10, Section 10.07 - Measurement and Payment, and shall include full payment for all Work described in this Section.

Payment shall be made under the following units:

ITEM	UNIT
Ft. Slip Base Luminaire Pole	Each
Ft. Fixed Base Luminaire Pole	Each
Ft. Direct-Bedded Luminaire Pole	Each
Signal Mast Arm Pole	Each
Combination Signal/Luminaire Pole (MTG Height)	Each
Signal Pedestal Pole	Each
Pedestrian Pushbutton Pole	Each

SECTION 80.06 MAST ARMS

Article 6.1 General

Design of signal and luminaire mast arms shall be in accordance with the requirements of the 1994 Edition of the "Standard Specifications for Structural Supports for Highway Signs, Luminaires and Traffic Signals," as published by AASHTO. Minimum design wind velocity shall be the greater of one hundred miles per hour (100 mph) or the AASHTO recommendation based upon a fifty (50) year mean recurrence interval dependent upon project location. A factor of 1.3 shall be used in design calculations to account for wind gusts.

Arms less than fifteen feet (15') in length shall be round or multisided, and constructed of No. 11 or heavier U.S. standard gauge steel, or four inch (4") standard (Schedule 40) pipe or conduit. Standard pipe shall conform to the specifications of ASTM A53.

Arms fifteen feet (15') or longer, shall be round or multisided, and fabricated from sheet steel of weldable grade.

Arms may be fabricated of full-length sheets or shorter sections. Each section shall be fabricated from not more than two (2) pieces of sheet steel for lengths up to forty feet (40'). Where two (2) pieces are used, the longitudinal welded seams shall be directly opposite one another. When the sections are butt-welded together, the welded seams on adjacent sections shall be placed to form continuous straight seams from base end of arm.

A backing plate consisting of a metal sleeve shall be provided at all butt-welded, transverse joints. The sleeve shall be No. 12 U.S. standard gauge steel minimum and made from steel having the same chemical composition as the steel in the pole. The metal sleeve shall have a minimum length of three inches (3"). The sleeve shall be in full contact with the inside of the standard throughout the sleeve length and circumference. The weld metal at the transverse joint shall extend to the sleeve, making the sleeve an integral part of the joint.

Pole plate to pole shaft connection shall be of the "closed box" type with top and bottom plates of the box forming a continuous stiffening ring around the pole. Gusset assemblies for this connection shall be butt-welded together. Vent holes, necessary for galvanizing, shall be used.

All welds shall be continuous. All welding practices shall conform to current AWS Code, AWS D1.1, latest edition.

Non-Destructive Testing (NDT) may be required by the Traffic Engineer on all newly manufactured poles for this project, prior to galvanization. A licensed technician shall perform all testing. NDT shall take the form or Magnetic Particle or Ultrasonic testing, and be performed as described in the current AASHTO standard. If required all NDT reports shall be submitted prior to acceptance for payment.

No exception to the practices mandated by AASHTO shall be allowed.

All exposed welds, except fillet welds and welds on top of mast arms shall be ground flush with the base metal.

All exposed edges of the plates which make up the base of the arm shall be finished smooth and all exposed corners of such plates shall be neatly rounded to one-eighth inch (1/8") radius, unless otherwise shown on the Drawings. Bolt holes in the mast arm base plate shall be round. Slotted holes shall not be allowed. Mast arm ends shall be provided with slip-fitter shaft caps of either galvanized steel or cast aluminum.

Damage to the galvanized or painted surface of existing arms to be relocated or reused in place shall be repainted in accordance with Section 80.16, Article 16.3 – Galvanizing or Article 16.4 – Painting for Steel Structures, as appropriate. Holes greater than three-eighths inch (5/8") in diameter in the shafts of existing arms, due to removal of equipment, shall be repaired. Holes shall be repaired by tapping the hole, coating all exposed edges with zinc rich paint, and plugging the hole with a screw-in type steel plug of the correct size. The plug shall be galvanized, or shall be completely covered with zinc rich paint. Plugging holes and repainting damaged galvanized or painted surfaces shall be incidental to other Work.

Extent of additional repairs or replacements will be determined by the Traffic Engineer or designee, and said repairs or replacements ordered will be paid for as extra Work as provided in Division 10, Sections 10.05 – Control of Work and 10.07 – Measurement and Payment.

Article 6.2 Measurement

Signal and luminaire arms will be measured as units complete and in place, including labor, equipment, and material necessary to make a complete and functioning unit.

All luminaires, signal heads, signs and optical preemption detectors shall be installed and accepted when mast arms are measured for payment, but shall not be included in payment for mast arms. These items shall be considered separate pay items, and measured under the appropriate sections of these Specifications. All other hardware, including wiring within the arms, shall be considered incidental to the pay items for signal mast arms or luminaire arms, and shall not be measured for payment.

Article 6.3 Basis of Payment

Payment for this Work shall be in accordance with Division 10, Section 10.07 - Measurement and Payment, and shall include full payment for all Work described in this Section.

Payment will be made under the following units:

ITEM	UNIT
Signal Mast Arm Ft. Length	Each
Luminaire Arm Ft. Length	Each

SECTION 80.07 CONDUIT

Article 7.1 General

Contractor shall run electrical conductors in conduit, except for overhead wiring, wiring inside poles and when otherwise called for in the Drawings. All conduit and fittings shall be galvanized, rigid type manufactured of mild steel or wrought iron conforming to U.L. Underwriters Laboratory Standard UL-6 and hot dip galvanized in accordance with American National Standards Institute specification ANSI C-80.1. If called for in the Drawings, rigid non-metallic type conduit shall conform to the UL Standard UL-651. Only one type of conduit shall be used in any one run from one junction box to another. Where non-metallic conduit is to be installed, the conduit runs between a load center and the nearest junction box shall be of the rigid metal type.

Conduit and fittings to be installed on the surfaces of poles or in structures and foundations shall be rigid metal type as specified above for underground installations.

Couplings for new rigid metal conduit shall be threaded. Where existing conduit is intercepted and extended, twist-on compression type couplings will be allowed. Set-screw couplings are not allowed on the project.

Conduit in foundations for ground rods shall be one inch (1”) diameter.

Contractor shall join conduits together with standard threaded couplings using a pipe wrench to ensure tight joints. Provide NPT threads on the ends of all shop and field cut conduits. Slip joints and straight threads shall not be used. Cut conduits with a rolling pipe cutter to ensure a square end and proper threading. Before threading, ream the cut ends to remove the sharp edge and all burrs. Thread the ends to within one thread of the factory threaded length and then paint the cut end and threads with a zinc rich paint overlapping the original galvanized finish. Galvanized coatings that have been cut or damaged shall be repaired in conformance with Section 80.16.3 - Galvanizing.

Until wiring is started, all conduit ends shall be capped with standard pipe caps or approved plug and coupling combinations. When caps are removed, the threaded ends shall be provided with approved conduit grounding bushings.

Contractor shall lay conduit to a minimum depth of thirty inches (30”) below finished grade. See Division 20, Section 20.13 - Trench Excavation and Backfill for backfill requirements.

Clean all debris and moisture out of conduits before installing conductors or cables.

If the conduit is for thaw wire only, then:

> Fittings for use in below-grade storm drains shall be suitably rated as NEMA 7, complete with gaskets for watertight installations.

Provide suitable conduit seals and sealant to make connections to junction boxes installed with manholes watertight.

Junction boxes for installation in manholes shall be NEMA Type 7, with gasketed covers for watertight installations.

Couplings and all threaded connections shall be provided with Teflon tape or approved water treatment applied to threads before tightening.

Bottom of trenches for non-metallic conduit shall be relatively free of sharp irregularities which would cause pinching and excessive bending of the conduit. The first six inches (6") of backfill shall be free of rocks exceeding the one inch (1") maximum dimension.

Conduit entering the bottom of concrete junction boxes shall terminate with a ninety degree (90°) sweep inside the box wall. Conduit openings shall terminate not less than five inches (5") above the bottom of all boxes and a minimum of six inches (6") below the top of the Type I and Type IA boxes and twelve inches (12") below the top of Type II and Type III boxes. Conduits entering through the junction box wall shall extend a minimum of two inches (2") inside the box wall, and be a minimum of six inches (6") above the bottom.

All foundations shall be furnished with conduits as shown in the Drawings. The conduits shall extend a maximum of four inches (4") vertically above the foundation and slope towards the hand-hole opening.

Conduit runs shall avoid drainage collection points where possible. At low points in all conduit runs, a one-half inch (1/2") drain hole shall be drilled in the bottom of the lower straight section of the sweep elbow and sump containing approximately two cubic feet of coarse concrete aggregate material shall be installed. Additional drains shall be placed adjacent to all junction boxes and structures, regardless of the method of conduit placement employed. Drilled holes in conduit shall be deburred inside and out to prevent scraping of conductors. The exterior of the one-half inch (1/2") hole shall be wrapped with approved filter cloth material and secured as directed or approved by the Engineer.

Conduits for future use shall be provided with grounding bushings, bonded to ground, and capped with an approved plastic insert type or expandable rubber plug. A polypropylene pull rope with two hundred pound (200 lb) minimum tensile strength shall be installed in all conduits which are to receive future conductors. At least two feet (2') of pull rope shall be doubled back into the conduits at each end.

Contractor shall mark all underground conduits with a continuous strip of 4-mil-thickness, six inch (6") width polyethylene marker tape. Contractor shall mark the tape with a black legend on a red background and buried nine inches plus or minus three inches (9" ± 3") below the finished grade. Contractor shall place two strips of marker tape side-by-side under all road crossings.

Where new junction boxes are placed in existing rigid metal conduit runs, the conduit shall be fitted with threaded bushings and bonded.

Conduit leading to soffit, wall or other lights or fixtures below the grade of the junction box shall be sealed by means of an approved sealing fitting and sealing compound.

Existing underground conduit without conductors to be incorporated into a new system shall be cleaned with a mandrel or cylindrical wire brush and blown out with compressed air.

The Contractor, at his expense, may use conduit of larger size than shown on the Drawings, and where used, it shall be for the entire length of the run from outlet to outlet. Reducing couplings are not permitted.

When extending existing conduits or installing junction boxes in existing conduit runs, extend the conduit into the proposed junction box or foundation using drains, elbows and bonding as required for new installations. When adjusting junction boxes, shorten or lengthen existing conduits to meet clearance requirements. Complete extensions and modifications to existing conduits using the same size and types of materials.

Contractor shall clean all debris and moisture out of conduits before installing conductors or cables.

All abandoned conduits shall be removed from junction boxes.

All knockouts for new conduit or removed conduit shall be grouted.

All knockouts for conduits entering through the side of junction boxes shall be grouted.

Cut off abandoned conduits flush with the inside wall or bottom of junction boxes. Contractor shall remove all conductors prior to abandoning conduit.

Article 7.2 Measurement

Measurement for furnishing and installing conduit is per linear foot of the size and type set forth in the Drawings and Bid Schedule. Measurement is the horizontal distance from center of device to center of device, or from station to station. Measurement shall include all fittings, couplings, pull wires, caps and elbows, and bonding and grounding conductors, which shall be considered incidental to conduit installation.

Conduits installed in manhole and catch basins will not be measured, but rather the following distances will be considered standard unless determined otherwise by the Engineer:

Manhole	forty feet (40’)
Catch Basin	sixteen feet (16’)

Article 7.3 Basis of Payment

Payment for this Work shall be in accordance with Division 10, Section 10.07 - Measurement and Payment, and shall include full payment for all Work described in this Section. Payment for trench, backfill, and wire are separate bid items.

Payment shall be made under the following units:

ITEM	UNIT
Steel Conduit (Size)	Foot
Schedule 80 PVC Conduit (Size)	Foot

SECTION 80.08 JUNCTION BOXES

Article 8.1 General

The Work under this Section consists of performing all operations pertaining to removing and adjusting existing junction boxes to grade and for furnishing and installing a new junction box of the type specified. This Work shall include all excavation, bedding material, and bonding and grounding hardware.

Type I junction boxes shall not be used in traffic signal systems.

Junction boxes shall be installed at the approximate locations shown on the Drawings. The Contractor, at his expense, may install additional junction boxes to facilitate his Work. Junction boxes shall be located so they are not in the roadway, sidewalk, driveway, or pathway surfaces, unless otherwise noted in the Drawings. Where practical, junction boxes shown in the vicinity of curbs shall be placed adjacent to the back of curb. Junction boxes shall not be located in drainage collection areas.

Article 8.2 Materials

Contractor shall provide precast reinforced concrete boxes (junction boxes) with cast iron lids, of the sizes and details shown on the Drawings.

Contractor shall provide precast reinforced concrete additions (junction box extensions) of the sizes and details shown on the Drawings with dimensions confirmed by field measurements.

Illumination junction boxes shall be pre-cast reinforced concrete with cast iron lids, or polymer concrete boxes of the sizes and details shown on the Drawings.

All Portland concrete cement utilized in the adjustment of the Junction Box shall conform to the requirements as specified in Division 55, Section 55.05 - Manholes and Catch Basin Manholes. The joint sealing compound utilized to seal the joint between the electrical vault's lid and walls shall be Ram-Nek Flexible Plastic Gasket or an approved equal.

Article 8.3 Construction

All junction boxes with metal covers shall have the covers effectively grounded with a four foot (4') tinned copper braid for Type I and Type IA Junction Boxes or a six foot (6') tinned copper braid for Type II and Type III Junction Boxes. Use only stainless steel bolt assembly components to attach bonding braid to the cover (lid). Bond junction box lids to the grounding conductor using copper braid with a cross sectional area equal to an 8 AWG conductor and eyelets spaced at six inch (6") intervals.

The entire bottom of all junction boxes shall be bedded in coarse concrete aggregate material of a minimum depth of eighteen inches (18").

Top of junction boxes shall be one-quarter inch (1/4") below the sidewalk grade or top of adjacent curb. When located in an unpaved section adjacent to a paved shoulder the junction box shall be located one inch (1") below the finished grade and shall be installed one-quarter inch (1/4") below the surface in paved areas. Junction boxes located in areas requiring grading shall be adjusted as directed by the Engineer. Junction boxes located in seeded areas shall be adjusted to two inches (2") below the surface.

Junction boxes shall be located immediately adjacent to the pole or fixture they serve and at additional intervals to reduce the distance between junction boxes to:

1. 400 feet maximum for 25 pair interconnect cable.

2. 200 feet maximum for any other conduit runs.

3. If the limitations require additional junction boxes they shall be located on equal spacings subject to the above limitations.

Emboss the word LIGHTING on the lids of all junction boxes containing only lighting or thaw wire conductors, or only lighting and signal controller power conductors. Emboss the word TRAFFIC on the lid of all other junction boxes.

No later than forty-eight (48) hours prior to commencement of Work on adjustment of the Junction Box, Contractor shall contact the Traffic Department.

Prior to removal of the Junction Box associated with traffic detector loops, Contractor, Engineer, and a Traffic Department representative shall inspect and verify the condition of the Junction Box.

Prior to replacement of the Junction Box, Contractor, Engineer, and a Traffic Department representative shall inspect the vault lid and vault structure to verify adjustments. Any Work, personnel, and/or materials required to properly correct problems shall be at Contractor's expense.

Article 8.4 Measurement

The method of measurement is the actual number of junction boxes removed, adjusted to grade and accepted, and the actual number of new junction boxes of the specified types furnished, installed, and accepted.

The unit cost for adjusting the Junction Box to finish grade shall include all labor, materials, and equipment. This shall include all required usable and unusable excavation, classified fill and backfill material, compaction, concrete cutting and removal, and required personnel.

Article 8.5 Basis of Payment

Payment for this Work shall be in accordance with Division 10, Section 10.07 - Measurement and Payment, and shall include full payment for all Work described in this Section.

Payment shall be made under the following units:

ITEM	UNIT
Junction Box (Type)	Each
Adjust Junction Box to Grade	Each
Remove Junction Box	Each
Junction Box Extension (Type)	Each

SECTION 80.09 EXPANSION FITTINGS

Article 9.1 General

Expansion fittings, as detailed on the structure Drawings, shall be installed where the conduit crosses an expansion joint in the structure. Each expansion fitting shall be provided with a bonding jumper of stranded, No. 6 AWG, copper wire.

Expansion-deflection fittings shall be waterproof and permit a three-quarter inch (3/4") expansion and contraction and a three-quarter inch (3/4") deflection without deformation.

Article 9.2 Measurement

Expansion fittings shall be considered as incidental to other Work.

Article 9.3 Basis of Payment

No separate payment for these items is allowed.

SECTION 80.10 CONDUCTORS

Article 10.1 General

Conductor sizes shall be based on the American Wire Gauge (AWG). Sizes shall conform to the Drawings or, when not shown, to the Conductor Termination Table below. Conductors shall be seven-conductor No. 14 AWG (7C-#14 AWG) for all vehicle heads, and five-conductor No. 14 AWG (5C-#14 AWG) for all pedestrian heads.

Conductor Termination Table

CONDUCTORS/ CABLE	CIRCUIT	WIRE COLOR	AWG NO.	BAND LEGEND
7	Vehicle Red Arrow	Red	14	Head Number
	Vehicle Yellow Arrow	Orange		
	Vehicle Green Arrow	Green		
	Common Neutral	White		
	Spare	White/Black		
	Spare	Black		
	Spare	Blue		
7	Vehicle Red Arrow	Red	14	Head Number(s)
	Vehicle Yellow Arrow	Orange		
	Vehicle Flashing Yellow Arrow	Black		
	Vehicle Green Arrow	Green		
	Common Neutral	White		
	Spare	White/Black		
	Spare	Blue		
7	Vehicle Red	Red	14	Head Number(s)
	Vehicle Yellow	Orange		
	Vehicle Green	Green		
	Common Neutral	White		
	Spare	White/Black		
	Vehicle Yellow Arrow	Black		
	Vehicle Green Arrow	Blue		
5	Pedestrian Don't Walk	Red	14	Head Number
	Pedestrian Walk	Green		
	Common Neutral	White		
	Spare	Orange		
	Spare	Black		
5	Photo Elec. Control	Black	14	PEC
	PEC Load to Contactor	Red		
	Neutral	White		
	Spare	Orange		
	Spare	Green		
3	Pedestrian Pushbutton	Black	14	Head Number
	Neutral	White		Located Under
	Spare	Red		

Conductor Termination Table

CONDUCTORS/ CABLE	CIRCUIT	WIRE COLOR	AWG NO.	BAND LEGEND
3	Flashing Beacon Ckt 1	Black	14	Head Number
	Flashing Beacon Ckt 2	Red		
	Neutral	White		
	Preemption Confirmation			
3	Light	Black	14	"PRE" Conf Lt
	Neutral	White		
	Spare	Red		
3	Highway Luminaire	Black	8	Circuit Number
	Highway Luminaire	Red		Circuit Number
	Highway Luminaire	White		
3	Service to Controller	Black	6	"SIG"
	Neutral	White		No Band
	Spare	Red		No Band
3	Sign Luminaire	Black	8	SIGN
	Sign Luminaire	Red		SIGN
	Sign Spare	White		

All insulated conductors shall consist of uncoated, stranded copper conforming to the specifications of ASTM B8, except for detector loop lead-in which shall consist of stranded, tinned copper.

Grounding conductors shall be bare copper of the gauge required by the Code and may be stranded, solid or braided.

Conductors used for the following purposes shall conform to the referenced specifications.

Article 10.2 Control Cables

Vehicular signal faces, pedestrian signal faces, pedestrian pushbutton detectors, flashing beacons, preemption devices, and photo electric controls shall be wired with signal cable conforming to IMSA 20-1.

The three-conductor No. 20 AWG (3C-#20 AWG) cable shown on the Drawings shall be used in an optically activated preemption system. The cable shall be sheathed in a black PVC jacket and include three (3) No. 20 AWG insulated conductors, and one (1) No. 20 AWG drain wire enclosed within an aluminized polyester shield. All conductors shall be stranded, individually tinned copper. The cable shall contain one yellow, one blue, and one orange insulated conductor. The cable shall be rated for 600 volts operation and be suitable for direct bury, installation in a conduit, and direct exposure to the atmosphere. Cable shall be a GTT Company's No. 138 Opticom cable, or approved equal.

Article 10.3 Power Conductors and Cables

Power conductors and cable shall conform to ICEA Publication No. S-66-524, NEMA Publication No. WC7, and U.L. Standards. Conductors shall be insulated with chemically cross-linked polyethylene conforming to U.L. type XHHW or XHHW-2. Insulation shall be rated for 600 volt operation.

Three conductor cables shall have black, white, and red colored conductors.

All single-wire conductors and cables shall have clear, distinctive and permanent markings on the outer surface throughout the entire length giving the manufacturer's name or trademark, the insulation type-letter designation, the conductor size, voltage rating and the number of conductors if a cable.

Highway and sign illumination cable shall consist of insulated conductors with a low density, high molecular weight polyethylene jacket.

Power cables with conductors No. 6 AWG and larger shall be PVC or neoprene jacketed.

Load center control circuit wiring shall be No. 12 AWG XHHW.

Conductors in controller cabinets that carry the full signal load circuit shall be No. 10 AWG or larger.

All cabinets shall be wired with conductors sized to handle the amperage drawn under full cabinet use.

Illumination tap conductors that run from the fused disconnect kit in the pole base to the luminaire shall be No. 10 AWG.

Article 10.4 Detector Loops and Lead-In Cables

Conductors for detector inductive loops shall be UL listed as Tube loop detector wire #14 AWG stranded single conductor in PVC tube (IMSA specification 51-5).

Loop Lead-in Cables. Use a tray cable that conforms to the following specifications to connect the loop detectors to the terminal blocks in the controller cabinet. Furnish this cable, also known as Snyder Cable, manufactured according to UL Standard 1277. Third-party certify these cables as Type TC and certified for use in underground conduit or as an aerial cable supported by a messenger, rated for 600 volts AC operation and sunlight resistance.

Use size 18 AWG, sixteen (16) strand, tinned copper conductors per ASTM B-33 insulated with wet rated cross-linked polyethylene. Twist the conductors into seven (7) pairs colored to match the following: Black & Red, Black & White, Black & Green, Black & Brown, Black & Yellow, Black & Orange and Black & Blue.

Provide each twisted pair with an overall aluminum foil coated Mylar shield that provides one hundred percent (100%) coverage and a 20 AWG tinned copper drain that is in constant contact with the foil side of the shield. Apply a tight fitting PVC jacket over the conductor assembly.

Article 10.5 Telemetry Cable

Interconnect cable shall consist of solid copper #19 AWG conductors of the number of pairs called for in the Drawings meeting the requirements of REA specification PE-39 for filled telephone cables. The shield may be either copper or aluminum. The outer jacket shall have a minimum thickness of one millimeter (1 mm).

Telemetry interconnect cable shall contain the number of pairs as shown on the Drawings. The conductors shall be covered with a .005-inch copper or aluminum shield that is electrically intact throughout the entire length of the new circuit. Grounding continuity of all copper shields shall be maintained at all termination points. T-Splices shall be made at the terminal block in the controller cabinet. Configuration and color coding shall be in accordance with the Interconnect Termination Table.

INTERCONNECT TERMINATION TABLE

Telemetry Cable: Type PE-39, #19 AWG, Solid Copper

Pair #	Tip	Ring	Pair #	Tip	Ring
1	White	Blue	14	Black	Brown
2	White	Orange	15	Black	Slate
3	White	Green	16	Yellow	Blue
4	White	Brown	17	Yellow	Orange
5	White	Slate	18	Yellow	Green
6	Red	Blue	19	Yellow	Brown
7	Red	Orange	20	Yellow	Slate
8	Red	Green	21	Violet	Blue
9	Red	Brown	22	Violet	Orange
10	Red	Slate	23	Violet	Green
11	Black	Blue	24	Violet	Brown
12	Black	Orange	25	Violet	Slate
13	Black	Green			

Article 10.6 Measurement

In this Article, the word “structure” means a pole, junction box, load center, or controller cabinet, and the word “cable” also refers to single conductors, when individual conductors are in the bid schedule. Each cable the Contractor installs shall be measured in horizontal feet from the center of a structure to the center of the adjacent structure, or from station to station. All terminations, markings, slack and other incidental supplies required to meet the provision of the Specifications are not measured, and are considered incidental to the Contract.

Wire and cable within poles, cabinets, and other devices are included under those bid units.

Article 10.7 Basis of Payment

Payment for this Work shall be in accordance with Division 10, Section 10.07 - Measurement and Payment, and shall include full payment for all Work described in this Section.

Payment will be made under the following units:

ITEM	UNIT
(No. of Conductors) (Size of Conductors) (Type of Cable)	Foot

SECTION 80.11 WIRING

Article 11.1 General

Conductors in fixtures and cabinets shall not be spliced and shall be cabled together with self clinching nylon ties. All conductors, including spares shall be attached to terminal blocks with "spade" type terminal lugs.

Conductors shall not be pulled into conduit until junction boxes are set to grade, crushed rock sumps installed, grout placed around the conduit, and rigid metal conduits are bonded to ground.

Conductors shall be pulled by hand or by commercially built cable pulling equipment that is specially designed for that purpose. The cable pulling device shall be equipped with a force limiting circuit and force gauge. The cable-pulling device shall be approved by the Engineer before it is allowed to be used. Powdered soapstone, talc, or other inert lubricant shall be used in placing the cables and conductors in conduit.

When new conductors are to be added to a conduit with existing conductors, all conductors shall be removed and the conduit cleaned with a mandrel or brush. Then both old and new conductors shall be pulled through as a unit. In a new installation, all conductors shall be pulled through the conduit as a unit.

Contractor shall leave at least three feet (3') of slack, but not more than four feet (4'), for each conductor at each lighting and combination pole, and in each junction box, splice location, and controller base. Where lighting conductors are contained in a conduit within the pole, the slack is not required.

Contractor shall install a nylon pull string in all conduits where cable is replaced and/or removed.

The neutral for pedestrian push button circuits shall be separate from the signal light circuit neutral.

All control/signal conductors shall be run continuously without splices from a terminal block located in a cabinet, compartment, or signal head, to a similarly located terminal block.

Contractor shall splice illumination cable in pole bases and shall use approved fuse kits only. Contractor shall not use wire binding screws, studs or nuts.

With the prior approval of the Engineer, Contractor may use illumination cable splices in junction boxes. Contractor shall join the individual conductors by the use of non-insulated, overlap type pressure connectors insulated with mastic-lined shrink tubing. Contractor shall not use wire binding screws, studs or nuts. Contractor shall stagger splices to minimize overall diameter.

Contractor shall encapsulate illumination cable conductor splices in a rigid, two-piece, transparent, snap together, plastic mold specifically designed for each splice type. Molds shall have dimensions suitable for the splice, encase the cable outer protective jackets, be rated for 600 volts, and have fill and vent funnels for epoxy resin. Contractor shall fill the splice mold bodies, with epoxy resin, that are resistant to weather, aromatic and straight chain solvents, and do not sustain combustion.

Splices shall be insulated by: 1) a heat shrink tubing internally coated with an approved sealing compound or, 2) a cast of self-curing epoxy resin which is compatible with the wire insulation to form a weatherproof joint. Each insulated kit shall encompass only one cable and include the outer protective jacket(s).

Loop lead-in cable shall be run in a continuous manner without splices from the controller cabinet to the curbside detection junction box. Splicing of the loop conductors to the lead-in cable shall be in conformance with Section 80.18, Article 18.1 – Loop Detectors and Standard Detail 80-60.

Each loop lead-in cable pair shall then run without splices to the terminal block in the controller assembly, where all series or parallel connections shall be made. At a splice location, a short section of the cable jacket shall be removed and only the shielded pairs dedicated to the loops being spliced shall be cut.

Illumination cable conductor splices and lead-in cable splice shall be encapsulated in a rigid, two piece, transparent, snap together, plastic mold specifically designed for each splice type. Molds shall have dimensions suitable for the splice, encase the cable jackets, be rated for 600 volts, and have fill and vent funnels for epoxy resin. The splice mold bodies shall be filled with epoxy resin that is resistant to weather, aromatic and straight chain solvents, and which shall not sustain combustion. Reenterable fill shall be utilized for detector splices.

All cables and single wire conductors shall be permanently identified using labels in all pole bases and cabinets, at each detector loop tail/lead in cable and illumination cable splices and in junction boxes.

Contractor shall furnish the two types of identification tags listed below that require a written legend, and write the legends specified neatly and legibly, using a black marking pen specified by the manufacturer. Contractor shall ensure that legends conform to Section 80.10, Conductor Termination Table, or as shown on the Drawings or detailed in the Special Provisions. Contractor shall replace, at no expense to the Owner, all identifications tags that the Engineer deems are illegible.

1. Use identification cable ties for labeling loop detector tails and for each set of paired loop lead-in conductors in the controller cabinet. Furnish identification

cable ties made of nylon that have a nonmagnetic stainless steel locking device embedded in the head and a tag attached “flag style” to the head. The cable ties shall consist of a single strap with a minimum size tag of three-quarters inch by five-sixteenth inch (3/4” x 5/16”).

2. To label all other cables, use cable tags made of nylon reinforced vinyl that is impervious to the elements and will not tear. Provide tags with a four inch by one and three-quarters inch (4” x 1 3/4”) minimum size that are attached flag style at one corner to a single strap. Furnish yellow tags for labeling all signal and interconnect cables and red tags for labeling lighting and feeder cables.

Contractor shall remove abandoned conductors/cables.

The control and power cables shall be terminated as shown in 80.10, Conductor Termination Table. Three conductor power cables shall always have a spare. The white or red conductor shall be left as a spare, when the circuit is either 480 volt or a neutral is required, respectively.

Terminate all spare conductors on terminal blocks.

Article 11.2 Measurement

Work performed under this article is considered incidental to other Work.

Removal and disposal of abandoned conductors is not measured for payment and is incidental to other Work. All splices, pull wire-string, cable tags, connectors, and fused disconnects are also considered incidental and no payment shall be made.

The Traffic Signal Electronics personnel will test and perform tie-down for all traffic loop detectors. The Contractor shall prepare the lead-in cables for tie-down, including labeling, insulation stripping and fitting with termination connectors.

When an existing active signal system is being modified, the Traffic Signal Electronics personnel will terminate all control cables within the traffic signal controller cabinet. It shall be the Contractor’s responsibility to prepare the cables for termination.

The Traffic Signal Electronics personnel will splice, test and perform tie-down on all interconnect wiring operations.

Article 11.3 Basis of Payment

No separate payment is allowed for this item.

SECTION 80.12 FUSED SPLICE CONNECTORS

Article 12.1 General

A fused, quick disconnect, splice connector shall be installed between the line and luminaire ballast tap conductors in the base of every pole equipped with a luminaire.

The connector shall be weather tight and consist of two halves: a single unit line side socket and load side plug. The plug and socket assembly shall be designed so that the fuse remains in the load side plug without exposing live metal parts when the connector separates. Coil springs shall not be a part of the current carrying circuit.

Contractor shall provide fuses that are ten (10) ampere, midget (13/32" x 1 1/2") ferrule type with a fast acting current limiting (KTK type) design.

The Contractor shall install the fused connectors so they are readily accessible from the handhole. Tap conductors shall be installed so there is no slack when their ends touch the top of the foundation.

Article 12.2 Measurement

Work performed under this article is considered incidental to other Work.

Article 12.3 Basis of Payment

No separate payment is allowed for this item.

SECTION 80.13 BONDING AND GROUNDING

Article 13.1 General

Metallic cable sheaths, metal conduit, non-metallic conduit grounding wire, ballast and transformer cases, service equipment, sign switches, metal poles and pedestals shall be made mechanically and electrically secure to form a continuous system, and shall be grounded. Bonding and grounding jumpers shall be copper wire or copper braid of the same cross-sectional area as No. 8 AWG for all systems.

Bonding of slip-base type standards and pedestals shall be by means of two conductors from the conduit, one attached with a ground rod clamp to an anchor bolt and the other connected to the lower portion of the shaft. Bonding of standards with frangible coupling type bases shall be made by attaching one conductor from the conduit to the lower portion of the shaft. The attaching bolt shall be weather resistant and be a minimum of three-sixteenth inches (3/16") in size. The conductor for the shaft shall be forty-eight inches (48") long.

One side of the secondary circuit of step-down transformers shall be grounded.

Grounding of metal conduit, service equipment and neutral conductor at service point shall be accomplished as required by the Code and the serving utility, except that grounding electrode conductor shall be No. 6 AWG, or equal.

Unless otherwise sized on the Drawings, Contractor shall install a bare #8 AWG copper wire in all non-metallic and metallic type conduits for bonding purposes. When wire is pulled into or out of existing conduit and the conduit does not have an existing bare #8 AWG copper wire, Contractor shall install the ground wire.

Contractor shall install grounded bushings with insulated throats on the ends of all metallic conduits.

Contractor shall splice grounding conductors with irreversible compression type connectors listed for the purpose.

Contractor shall install grounding bushings on all metallic conduits. All non-metallic conduits, except for detector loop home runs, shall have a bushing installed. Contractor shall allow for bushings when installing conduits in foundations.

Contractor shall replace all missing or damaged conduit grounding bushings, conduit bonding jumpers and junction box lid braided bonding jumpers.

Contractor shall provide a minimum #10 AWG green grounding insulated conductor in the pole shaft of all poles with luminaires, and shall terminate the conductor in the lighting fixture.

Bond junction box lids to the grounding conductor using copper braid with a cross sectional area equal to an 8 AWG conductor and eyelets spaced at six inch (6”) intervals.

An integral bare ground shall not be used in any cable.

Contractor shall ensure that the grounding conductor, between all ground rods, is continuous or spliced with irreversible ground rated splices.

Contractor shall install a three-quarter inch by ten foot (3/4” x 10’) copper clad steel ground rod in the foundation space of a two-piece vault style traffic signal controller foundation. If two-piece vault style controller foundation isn’t being installed, then install ground rod within Type 3 junction box adjacent to controller cabinet base.

Contractor shall use only stainless steel bolt assembly components to attach bonding braid to the cover (lid).

Furnishing and installing bonding and grounding conductors for electrical installations is incidental to this Contract and no additional payment is made.

Article 13.2 Measurement

Work performed under this article is considered incidental to other Work.

Article 13.3 Basis of Payment

No separate payment is allowed for this item.

SECTION 80.14 LOAD CENTERS

Article 14.1 General

When the positioning of the load center is not detailed on the Drawings, the location shown is approximate and the Contractor shall determine the exact location from the Engineer or the serving utility.

Where Contractor is required to install the service on a utility-owned pole, the positioning of the riser and service equipment is determined by the serving utility.

The serving utility shall approve load center meters, complete with manual circuit closing device and sealing rings. Contractor shall not mount meter sockets on doors.

All accessible sections containing non-metered conductors shall have sealing provisions that will accept Brooks Type 623 seal (0.047 stainless bail).

Contractor shall ensure that the load center is located ten to fifteen feet (10' to 15') from the power source, with a two inch (2") minimum conduit stubbed to within two feet (2') of the power source, and at a minimum depth of forty-two inches (42"). The conduit shall contain a pull-rope, and the end capped and marked with a two by six inch (2" x 6") board. Contractor shall coordinate exact location with the serving utility.

Contractor shall stub service conduit through base as shown on the Drawings.

Prior to the load center being energized by the serving utility, Contractor shall arrange to have it inspected and approved by a Municipal Electrical Inspector. The certificate of electrical inspection, attached to the load center, indicates approval.

At all new and existing load centers, which require modification, the Contractor shall furnish conduit, conductors, contactors, breakers, transformers, and all necessary materials to complete the installation of the service, and upgrade to current code requirements.

Contractor shall label the load center as a unit by an Approved Independent Electrical Testing Laboratory (such as UL, ETL, CSA, etc.) defined by ANSI Standard Publication Z34.1 "Third Party Certification Programs for Products, Processes and Services" and conform to applicable published standards noted herein, the Drawings, and Special Provisions. Contractor shall label the load center as service entrance equipment. All Work shall conform to the latest edition of the National Electric Code as last amended and adopted by the Municipality of Anchorage.

All lighting load centers shall contain a multi-pole, 3-position control switch to provide selection of photocell operation. Contractor shall label switch positions "Auto," "Off" and "On." In the "Off" and "On" positions of the switch, Contractor shall ensure all leads to the photo control device are de-energized. Contractor shall install the switch inside the load center, accessible only through one of the lockable doors.

Contractor shall provide UL-approved and listed circuit breakers. Contractor shall provide an enclosed operating mechanism that is:

1. trip-free from operating handle on overload

2. trip-indicating

3. plainly marked with trip and frame size.

Multiple-pole circuit breakers shall have a common trip. Contractor shall ensure that all circuit breakers are quick-make, quick-break on either automatic or manual operation, and shall meet the requirements of the serving utility. Contractor shall ensure that the contacts are silver alloy enclosed in an arc-quenching chamber. An ambient temperature range of from -40° to +160° Fahrenheit shall not influence overload tripping of breakers.

The contactors shall have contacts rated to switch thirty (30) or sixty (60) AMP inductive loads as the Drawings specify, and are normally open. Contractor shall provide mechanical armature type contactors consisting of an operating coil, a laminated core, a laminated armature, contacts, and terminals with contacts made of fine silver, silver alloy, or superior alternative materials and rated for 480V.

Contractor shall provide the lighting contactor coil(s) rated for operation at 240 VAC.

Contractor shall connect ground bus of load center to ground rod(s) with #6 soft drawn bare copper and approved connectors.

Dimensions given are typical. Slight variations are allowable, subject to Engineer's approval.

Contractor shall submit four (4) copies of manufacturer's shop drawings for Engineer approval.

Contractor shall indicate the interrupting rating on panel schedules for each location.

On panel schedules for each location, Contractor shall indicate service rating of 120/240V, 3 wire; 240/480V, 3 wire; 100 AMP or 200 AMP.

Contractor shall provide a typed circuit directory for each load panel inside of the load center door, protected with a plastic cover, describing each circuit, with even and odd numbered circuit breaker positions shown on separate parts of the directory. Contractor shall provide a power and control 1-line diagram protected by a laminated plastic cover inside the load center. Contractor shall include the following information on the directory and one-line diagram: Load Center Identification (A, B, etc.), Project Name, Municipal Project Number and Service Voltage.

Contractor shall ensure that the wiring configuration conforms to the appropriate electrical diagram, and as the panel schedule indicates for each intersection. Contractor shall

complete a load center summary per appropriate detail drawing for each load center location.

Contractor shall ensure that all terminals are suitable for AL/CU termination, sized in accordance with ampere ratings.

Contractor shall provide #12 AWG XHHW as the load center control wiring.

Contractor shall ensure that the utility section is isolated from main load section and the distribution load sections by non-removable metal barriers, and equipped with landing lugs for utility termination.

The meter section shall contain a meter safety socket with safety shield and provisions for manual bypass of the meter. Contractor shall provide a link or lever type bypass with no external screws, bolts, or nuts. Horn and sliding types are not acceptable.

External screws, bolts, and nuts are not acceptable.

Contractor shall provide exterior nameplate, safety labels, interior identification labels, wiring diagram, and installation instructions with the pad-mounted load centers.

Contractor shall label in a prominent manner all switches and circuit breakers for circuit and direction.

Contractor shall ensure the lighting contactor coil is rated for operation at 240 VAC.

Contractor shall install load centers having 30 milliamp (ma) ground fault circuit breakers with ratings for all heat trace circuits as indicated on the Drawings.

Article 14.2 Illumination Control

Contractor shall install photoelectric controls capable of switching multiple lighting systems directly.

The photoelectric control shall consist of a photoelectric unit that shall cause a contactor to be energized, thus controlling the lighting circuit. Contractor shall install photoelectric units on the load center, unless the Engineer requires pole mounting of the photoelectric unit because a load center mounted unit will not work properly due to ambient light sources. If required, Contractor shall provide photoelectric units for pole top mounting with a slip fitter, terminal block and with cable supports or clamps to support pole wires. There will be no separate payment for providing the required photoelectric units.

Photoelectric Unit:

1. The photoelectric unit shall consist of a light sensitive element connected directly to a normally closed, single pole throw control relay without intermediate amplifications.

2. The unit is either the horizontal sensing or zenith sensing type and shall conform to the following:

    a. The supply voltage rated is 60 hertz (Hz), 105-277 volts.

    b. The maximum rated load is a minimum of 1,800 volt-amperes.

    c. The operating temperature range is from -40°F. to +150°F.

    d. The power consumption is less than 10 watts.

    e. The base of the unit has a 3-prong, EEI-NEMA standard, twist-lock plug mounting.

3. Units for highway lighting shall have a "turn-on" between one (1) and five (5) foot candles and a "turn-off" at between one and one-half and five (1½ and 5) times "turn-on."

4. Contractor shall ensure measurements conform to the procedures set forth in EEI-NEMA Standards for Physical and Electrical Interchangeability of Light-Sensitive Control Devices Used in the Control of Roadway Lighting.

5. The photoelectric control unit shall plug into a phenolic resin twist lock receptacle, adjusted to north sky set in a cast aluminum-mounting bracket with a threaded base. When installed on the load center, Contractor shall ensure the bracket is coupled to the end of a rigid metal conduit. When installed on the top of steel poles, Contractor shall ensure the bracket is installed in the center of the rain cap, secured with a locknut and made watertight with a fillet of silicone caulking compound. When installed inside the load center, Contractor shall ensure the installation conforms to the manufacturer's recommendations and that all load center penetrations/openings are silicon sealed.

6. Contractor shall screen photoelectric units to prevent artificial light from causing cycling.

The load center shall contain a 2-pole, 3-position on/off auto switch. In the "on" and "off" positions, Contractor shall ensure the switch interrupts all hot leads to the photocell.

Article 14.3 Step Up/Step Down Transformer

Step up/step down transformers in 480 volt circuits shall be 240-120 volt, 60 Hz type with volt-ampere ratings as shown on the Drawings. Transformers shall carry rated volt-amperes continuously without exceeding 85°C temperature rise above 25°C ambient.

Where installed outside of the load center, use a non-ventilated transformer fabricated of aluminum, stainless steel or galvanized steel. Coat enclosures fabricated of sheet metal with moisture resistant paint.

The case shall be fabricated of aluminum, brass, or galvanized steel. The case shall be coated with moisture resistant paint.

The unit shall be filled with a high melting point insulating compound and shall be hermetically sealed to insure satisfactory operation under continuous submersion in water.

Transformer leads shall be insulated with non-hygroscopic material and shall extend at least nine inches (9”) outside the case seal.

The primary and secondary sides of the transformer shall be "protected" in the load center.

Article 14.4 Pad-Mounted Load Center

All doors shall be equipped with continuous stainless steel pin hinges, coin latches, and hasp for padlock.

Meter section door shall have a clear lexan meter reading window, 0.187" minimum thickness, with a minimum size of eight by eight inches (8.0" x 8.0"), and shall include a silicon seal to door.

The load center shall be provided with internal mounting facilities for a one-half inch (1/2") anchor bolt installation as well as for use with a standard factory mounting base assembly.

Construction shall be of zinc-coated A60 finish steel with minimum thickness as follows:

Exterior Shell - 12 GA.

Interior Doors - 14 GA.

Interior Panels - 14 GA.

Interior Covers - 16 GA.

The load center shall be painted with a two-part urethane paint undercoating inside and out. The final finish shall be a two-part urethane paint, standard white for removable panels and non-gloss silver-gray, Benjamin Moore GN-42, for the enclosure.

The required location for the hand-off-auto switch and the contactor is in the distribution load section.

All non-current carrying parts shall be bonded to ground.

Article 14.5 Post-Mounted Load Center, Type 2 - Underground Service

A post-mounted load center, Type 2, shall be defined in the Construction Drawings by reference to appropriate Standard Details for the load center, wiring diagram, and panel schedule.

Article 14.6 Post-Mounted Load Center, Type 3 - Overhead Service

A post-mounted load center with overhead service, Type 3, shall be defined in the Construction Drawings by reference to appropriate Standard Details for the load center, wiring diagram, and panel schedule.

Article 14.7 Single-Meter Pad-Mount Load Center, Type 1 & 1A

A single-meter pad-mount load center, Type 1A, shall be similar to Circle AW CMP-4111MN mounted on MB-1514 base or equivalent approved by the Municipal Traffic Engineer. It shall be defined in the Construction Drawings by reference to appropriate Standard Details for the load center, wiring diagram, and panel schedule.

A single-meter pad-mount load center, Type 1, shall be similar to Circle AW CMP-4900 series mounted on MB-2820 base or equivalent approved by the Municipal Traffic Engineer. It shall be defined in the Construction Drawings by reference to appropriate Standard Details for the load center, wiring diagram, and panel schedule.

Article 14.8 Measurement

Load centers shall be measured as units, complete and in place. Bases for pad-mounted load centers shall be a separate bid item under "foundations."

Photoelectric units mounted on the load center shall not be measured separately for payment. The Work performed under Article 14.2 – Illumination Control, is considered incidental to Work performed under Articles 14.5 through 14.7, unless a pole mounted photoelectric unit is required.

Article 14.9 Basis of Payment

Payment for this Work shall be in accordance with Division 10, Section 10.07 - Measurement and Payment, and shall include full payment for all Work described in this Section.

Separate payment will be allowed for pad-mount bases.

Payment shall be made under the following units:

ITEM	UNIT
Post-Mounted Load Center Overhead Service, Type 3	Each
Post-Mounted Load Center Underground Service, Type 2	Each
Single-Meter Pad-Mount Load Center, Type 1	Each
Single-Meter Pad-Mount Load Center, Type 1A	Each
Pole-Mounted Photocell Installation, Complete	Each
120/240 - 240/480, Transformer	Each

SECTION 80.15 WOOD POLES

Article 15.1 General

Wood poles for service or temporary installations shall be of the class shown on the Drawings. Wood poles used in temporary installations shall meet or exceed ANSI class 4 for poles used for temporary illumination only, and ANSI class 1 for poles used for temporary signalization.

Poles shall not have more than 180 degrees twist in grain over the full length. Sweep shall be no more than four inches (4”). Poles shall be placed in the ground to a depth of at least six feet (6’). The lengths of poles shall be twenty-five feet (25’) for service poles and thirty-five (35’) feet for other poles, unless otherwise specified.

After each wood pole is set in the ground, the space around the pole shall be backfilled with selected earth or sand, free of rocks four inches (4”) or larger, or deleterious material, placed in layers approximately four inches (4”) thick and thoroughly compacted with mechanical tampers.

Mast arms and tie rods for wood pole installations shall conform to the provisions of Section 80.05 – Poles, Steel Pedestals, and Posts, and to the details shown on the Drawings. Each mast arm shall be provided with an insulated wire inlet and wood pole mounting bracket for mast arm and tie rod cross arm.

Overhead equipment shall provide a minimum vertical clearance of eighteen feet (18’) from bottom of equipment to the pavement.

Wood poles, not to be painted, shall be pressure treated after fabrication with creosote, pentachlorophenol (oil borne), or copper naphthenate (oil borne) in accordance with the latest applicable standards of the American Wood Preservers Association. Where it is impractical to obtain the specified retentions because of the character of the wood in the charge, the treatment shall be to refusal. The retentions may be determined either by gauge or scale readings or by assay. Treated poles shall be coated in conformance with current EPA regulations.

Wood poles shall not be used for permanent installations.

Article 15.2 Measurement

Wood poles used for temporary support of signals, signs and illumination shall be measured as temporary wood pole structures installed and removed.

Article 15.3 Basis of Payment

Payment for this Work shall be in accordance with Division 10, Section 10.07 - Measurement and Payment, and shall include full payment for all Work described in this Section.

Payment shall be made under the following units:

ITEM	UNIT
Temporary Wood Pole Structures	Each

SECTION 80.16 MISCELLANEOUS

Article 16.1 Sign Switches

Each sign illumination installation shall be provided with a disconnect switch mounted on the sign standard or structure, as shown on the Drawings. Where the sign lighting is served from a multiple service, each sign structure shall have a 120-volt, 240-volt, or 480-volt circuit breaker, approved by UL as service equipment, and rated as shown on the Drawings.

Enclosures for the sign breaker shall be galvanized or baked enamel NEMA Type 3R, and shall be provided with top hinged cover, hasp for sealing cover and provisions for locking.

Article 16.2 Field Tests

Prior to acceptance of the Work, the Contractor shall perform the following tests on all traffic signal, sign illumination, and lighting circuits, in the presence of the Engineer.

A. Tests

Any fault in any material or in any part of the installation revealed by these tests shall be replaced or repaired by the Contractor at his expense in an approved manner, and the same test shall be repeated until no fault appears.

1. Continuity

Each circuit shall be tested for continuity.

2. Grounds

The test for grounds in each circuit shall consist of the physical examination of the installation to insure that all required grounding bushings, bonding jumpers, and ground rods have been installed and are mechanically firm.

3. Insulation

A megohm test shall be made on each circuit, between circuits and between the circuit and a ground. The insulation resistance shall not be less than 100 megohms or the minimum specified by the manufacturer, measured at 500 volts direct current (VDC). All lamps and magnetometer sensing probes shall be disconnected prior to performing the megger test.

4. Circuit

Every signal indication circuit shall be energized with lamps installed prior to installation of the load switches.

5. Functional

The following tests shall be performed on each signal and lighting system after all of the component circuits have satisfactorily passed the tests for continuity, grounding, insulation integrity and circuitry.

B. Functional Testing

During the test periods, the Contractor will maintain the system or systems. The cost of any maintenance necessary, except electrical energy, shall be at the Contractor's expense.

1. The functional test for each new or modified traffic signal system shall consist of not less than twenty-four (24) hours nor more than five (5) days of continuous flashing operation.
2. During the functional tests, signals shall not be switched from flashing operation to normal, continuous operation on a Saturday, Sunday, Monday, a Holiday, or the day after a Holiday.
4. The functional test for each highway lighting system and sign illumination system shall consist of an operational test for five (5) consecutive nights according to the regular lighting schedule.
5. The functional test for each flashing beacon system shall consist of not less than five (5) days of continuous, satisfactory operation.
6. A continuous five (5) day burning test shall be made on each pedestrian overcrossing and undercrossing lighting system before final acceptance.

The initial turn-on shall be made between 9:00 a.m. and 2:00 p.m. unless specified otherwise in the Special Provisions. Prior to turn-on, all equipment shown on the Drawings shall be installed and operable. This includes, but is not limited to, pedestrian signals and push buttons, signal face backplates and visors, vehicle detectors, highway lighting and all regulatory, warning and guide signs. All signal faces shall be aimed as required by Sections 80.19 – Signal Heads and 80.20 – Pedestrian Signals.

Article 16.3 Galvanizing

A. General

Standards, pedestals, posts and cabinets of ferrous materials shall be galvanized in accordance with the provisions of ASTM A123 except that cabinets and cut out boxes may be constructed of material galvanized prior to fabrication.

Iron or steel pipe standards and mast arms shall be hot-dip galvanized after fabrication in conformance with the ASTM A123.

Tie-rods, nuts, washers, clamps, anchor bolts and other miscellaneous ferrous parts shall be hot-dip galvanized after fabrication in accordance with the provisions of ASTM A153. Anchor bolts shall be fully galvanized.

After galvanizing, the bolt threads shall accept galvanized standard nuts without requiring tools or causing removal of protective coatings.

Rigid metal conduit shall be hot dip galvanized in accordance with American National Standards Institute specification ANSI C-80.1.

Galvanized coatings that have been cut or damaged shall be repaired in conformance with ASTM A780.

B. Cold Galvanizing

Repair hot-dip galvanized finishes that have been cut or damaged and cold galvanize the tops of pipe pile foundations with a premixed, single component, zinc rich paint that:

1. Meets the requirements of Federal Specification DOD-P-21035A, Galvanizing Repair Specification and ASTM A 780, Repair of Damaged and Uncoated Areas of Hot-Dip Galvanized Coatings,
2. Contains ninety-five percent (95%) zinc, by weight, in the dried film, and
3. Is recognized under Underwriters Laboratories, Inc. component program as an equivalent to commercial hot-dip galvanizing.

Apply the paint directly to surfaces devoid of grease, oil, mill scale, rust, and paint. Clean soiled surfaces according to the following Steel Structures Painting Council (SSPC) specifications before applying the paint:

- Solvent clean greases and oils according to SSPC-SP1
- Power tool clean rust and easy to remove paint according to SSPC-SP3
- Sandblast mill scale and firmly adhered paint according to SSPC-SP6 (commercial).

Apply the paint whenever the temperature of the pipe pile is at least five degrees Fahrenheit (5ºF) above the dew point to avoid possible condensation and the relative humidity is less than eighty-five percent (85%). Apply two (2) coats of three (3) mil wet film thickness, applying the second coat at least twelve (12) hours after applying the first coat. (Each gallon will cover about four hundred and fifty (450) square feet of three (3) mil wet film thickness.)

Article 16.4 Painting for Steel Structures

A. General Requirements. Ship paint in strong, substantial containers, plainly marked with the name, weight, and volume of the paint content, together with the color formula, batch number, and the name and address of the manufacturer.

Reduction and clean-up thinners will be as approved by the coating manufacturer. Ship all thinners in the manufacturer's original containers.

B. The paint shall conform to the requirements outlined below:

1. Prime Coat. A generic single component, moisture cure, polyurethane (SC-MC-U) containing not less than 78% by weight zinc powder. Volume of solids shall be 60% minimum. Pigment type shall be zinc dust. Zinc in dry film shall be 83% minimum, by weight. Weight per liter shall be 2750

g, minimum. Volatile organic compounds (VOC's) shall not exceed 450 g/L.

2. Intermediate Coat. A SC-MC-U containing not less than 480 g/L micaceous iron oxide (MIO). Volume of solids shall be 60% minimum. Pigment color shall contrast between the intermediate and prime coat and the intermediate and top coat. Weight per liter shall be 1550 g minimum. VOC's shall not exceed 450 g/L.3. Top Coat. A single component, moisture cure, aliphatic polyurethane (SC-MC-ALIP-U), containing not less than 480 g/l micaceous iron oxide (MIO). Volume of solids shall be 60% minimum. Pigment color of the top coat shall be FSS FED-STD-595B, color number 26492. The color match shall be evaluated as a general match under a daylight source using ASTM D 1729. Weight per liter shall be 1550 g minimum. VOC's shall be less than 450 g/L.

3. All coatings shall pass the following tests:

   a. Corrosion Resistance, ASTM B 117, Salt Spray Test. Minimum of 4000 hours with less than 2 mm creep from scribe. Panels shall be 3 mm minimum thickness cold rolled steel, having SSPC Near White Blast with 25 to 50 μm angular profile.

   b. Accelerated Weathering, ASTM G 53. Minimum 400 hours QUV B bulb with no chalking, cracking, or gloss loss greater than 20%.

   c. Forward Impact, ASTM D 2794. Minimum 17 Nm impact.

   d. Abrasion Resistance, ASTM D 4060. Less than 90 mm loss on CS-17 wheel, 1000 g/load, 1000 cycles.

   e. Moisture Resistance, ASTM D 4585. Minimum 1000 hours at 38° C with no change in appearance.

   f. Flexibility, ASTM D 522, Cylindrical Mandrel Bend Test. Bend around 12.5 mm diameter mandrel with no cracking.

   g. Adhesion, ASTM D 4541. Minimum 3.5 Mpa on a certified pull test.

C. New Equipment.

1. Signal heads, signal head mountings, brackets and fittings, outside of visors, pedestrian push button housings, pedestrian signal head housings and visors, and back faces of backplates, shall be factory finished with two (2) coats of dark olive green enamel. Painting is not required where the color is an integral part of the component material, or powder coated.

2. Interior of signal visors, louvers, and front faces of backplates shall be factory finished with two (2) coats of lusterless black enamel.

3. After erection, all exterior surfaces shall be examined for damage, and such damaged surfaces shall be cleaned and spot coated with primer and finish coat.

4. Two factory finishing coats of aluminum paint shall be applied to controller cabinets.

5. Controller cabinet shall be painted white inside and silver-gray outside, with under coating inside and out.

D. Reused Equipment.

1. Existing non-galvanized, damaged equipment shall be painted in the field, including Owner-furnished equipment. The equipment shall be washed with a stiff bristle brush using a solution of water containing two tablespoons (2 tbsp/gal) of heavy duty detergent powder per gallon. After rinsing, all surfaces shall be wire brushed to remove all poorly bonded paint, rust, scale, corrosion, grease or dirt. Any dust or residue remaining after wire brushing shall also be removed prior to priming.

2. Factory or shop cleaning methods for metals will be acceptable if equal to the methods specified herein.

3. Immediately after cleaning, all bare metal shall be coated with Pre-Treatment, Vinyl Wash Primer, followed by two (2) prime coats of Zinc Chromate Primer for Metal.

4. Signal equipment, excluding standards, shall be given a spot finishing coat on newly primed areas, followed by one (1) finishing coat over the entire surface.

5. Ungalvanized standards shall be given two (2) spot finish coats on newly-primed areas.

6. All paint coats may be applied either by hand brushing or by approved spraying machines. The Work shall be done in a neat and workmanlike manner. The Engineer reserves the right to require the use of brushes for the application of paint, should the Work done by the paint spraying machine prove unsatisfactory or objectionable.

Galvanized equipment with rusted areas shall be repaired as provided for in Article 16.3 - Galvanizing.

Article 16.5 Measurement

The Work performed under this section is considered incidental to other Work.

Article 16.6 Basis of Payment

No separate payment is allowed for Work performed under this Section.

SECTION 80.17 CONTROLLER ASSEMBLIES

Article 17.1 General

Each solid-state, traffic controller assembly shall operate various traffic signal devices as shown on the Drawings, to provide right-of-way, clearance and other indications with duration and sequence as determined by preset programming.

Details of operation for the complete controller assembly shall be in accordance with the traffic phases, preferential phase sequence and concurrence, signal indications, signal indication sequence, detection requirements and other details shown on the Drawings or as specified herein.

All controller assemblies shall conform to NEMA Standard Publication TS 2-2003 V02.06 level 2, Traffic Controller Assemblies with NTCIP Requirements as defined in NTCIP1202. Traffic Controller Assemblies shall meet or exceed the Environmental Requirements of Section 2 of the NEMA TS2-2003 V02.06 document. The Original Equipment Manufacturer (OEM) and its manufacturing and testing facilities shall be ISO 9001:2000 certified for processes involving the Traffic Controller Assemblies.

The cabinet shall be 100% compliant with Section 1605 of the American Recovery and Reinvestment Act of 2009, requiring the use of American iron, steel and manufactured goods.

The cabinet assembly shall be completely manufactured in the United States of America.

LED indicators shall be used for all electronic devices covered under Article 80.17.

Controllers shall be compatible with the existing Anchorage traffic control system and contain necessary internal communication modems. Compatibility must be 100% at the cabinet level to include inputs, outputs, telemetry protocol, and block upload and download of RAM data.

Manufacturer schematic shall be submitted to the Traffic Engineer or designated representative prior to approval of all controller assemblies.

The existing traffic signal monitoring system is Centracs ATMS by Econolite

Features of the existing local controllers and controller modules must be functionally duplicated to meet or exceed the performance of the existing equipment.

The existing local controller cabinets at other intersections include the following equipment: Econolite ASC/3-2100

Article 17.2 Controller Unit

Actuated Controller Unit (CU).

Provide solid state, Type A2N Actuated Controller Units (CU) meeting the requirements of Section 3 of the NEMA Standard Publication TS 2-2003 V02.06, Traffic Controller Assemblies with NTCIP Requirements.

- The CU must meet the referenced National Transportation Communications for ITS Protocol (NTCIP) and comply with publication TS 3.2 the Simple Transportation Management Framework, and shall meet the requirements for Conformance Level 2

- The software shall comply with NEMA TS 3.3, the Class B Profile, and shall include both an EIA/TIA 232-E and an FSK modem interface for NTCIP based communications.

- The CU shall implement conformance groups and optional object groups as defined in NEMA TS 3.4 and TS 3.5 for A2N level 2.

- Provide controllers with display heaters or enhancements to improve viewing in temperatures below 0 □F.

- Provide controllers having an interface compatible with SYNCRO-7 traffic modeling software.

Furnish two (2) Econolite ASC/3-2100 controller unit or approved equal also meeting the following requirements:

A. HARDWARE

1. Enclosure

a. Compact the controller to fit in limited cabinet space. It shall rest on a shelf that is not more than 7" deep. External dimensions shall be no larger than 10 1/4" x 15 1/4" x 9" (H x W x D).

b. Construct the enclosure of aluminum and finish with an attractive and durable protective coating. Permanently display model, serial number, and program information on the top surface.

2. Electronics

a. Modular electronics with vertical circuit boards. Horizontal circuit cards are not acceptable.

b. Use a microprocessor for timing and control functions. Verify continuing operation of the microprocessor by an independent monitor circuit that is set an output and indicate an error message if a pulse is not received from the microprocessor within a defined period.

c. In the interest of reliability, do not use sockets for any electronic device. Devices must be directly soldered to the printed circuit

board. Use surface mount parts for the majority of the electronic components in the controller.

d. Use a built-in, high-efficiency switching power supply to generate required internal voltages as well as 24 VDC for external use. Regulate voltages and monitor with control signals. Mount the fuses on the front of the controller for 120 VAC input and 24 VDC output.

e. Derive timing of the controller from the 120 VAC power line.

f. Store user-programmed settings and intersection configuration data in Flash Memory. Memory requiring an energy storage device (battery or capacitor) to maintain user data is not acceptable. To facilitate the transfer of user programmed data from one controller to another, a data transfer module (data key) using a separate serial flash memory device is an option. This data transfer module shall be easily removable and directly accessible from the front of the controller. The controller will not require this module to be present for proper operation.

g. Store controller software in Flash Memory devices. The controller software shall be easily updated without the removal of any memory device from the controller. The use of removable PROMS or EPROMS from the controller is not acceptable. Option to update software on the controller using a Windows based computer. Allow updating the controller software via a serial or Ethernet port from the front of the controller. Updating the controller software shall require the intersection to be in flash for no more than ten seconds using Ethernet file transfer.

h. Printed circuit boards shall meet the requirements of the NEMA Standard plus the following requirements to enhance reliability:

(1) Plated -through holes and exposed circuit traces with solder.

(2) Solder mask material covering both sides of the printed circuit board.

(3) Clearly marked circuit reference designation for components and the polarity of capacitors and diodes adjacent to the component. Designated pin 1 for integrated circuit packages on both sides of printed circuit boards.

(4) Printed circuit board assemblies, except power supplies, coated with a clear moisture -proof and fungus -proof sealant.

3. Front Panel

a. Front of the controller consisting of a panel for the display, keyboard, and connectors for necessary user connections. Maintenance of the electronic circuits and option installation will be possible by opening the front panel only.

b. Required 16-line by 40-character/line alphanumeric liquid crystal display (LCD) to show program, and status information with the display area nominal measurements of 2 1/2" x 4 1/2" (H x W), or larger. Provide, for ease of viewing, backlighting by light emitting diodes and multiple levels of contrast adjustment. Adjustable display contrast with front panel mounted push buttons. The use of user potentiometers for display contrast will not be acceptable.

c. Clearly labeled front-panel operator inputs and environmentally sealed electrometric keys. Including a 10 digit numeric keypad, nine function keys, an oversized ENTER key, and an oversized four arrow cursor control key.

d. Required nine function keys, clearly labeled, and providing the following operation:

MAIN MENU - Pressing the Main Menu key displays the main menu.

SUBMENU - Pressing the Sub Menu key from a data screen displays the current submenu.

NEXT DATA - Pressing the Next Data key searches for the first non-zero data field, thus allowing rapid search for valid entries.

NEXT SCREEN - Pressing the Next Screen key l displays the next screen, thus allowing rapid advancement from screen to screen.

HELP - Pressing the Help key at a data entry field displays a help screen about that field.

STATUS DISPLAY - Pressing the Status Display key presents the intersection status display.

NEXT PAGE - Pressing the Next Page key advances to the previous or next group of data entry screens in a submenu.

BACKLIGHT - Pressing up and down arrow-shaped keys adjusts the backlighting of the LCD display screen for brighter or dimmer contrast.

SPECIAL FUNCTION - Pressing the special function key places Pedestrian Calls while viewing the main status display, lock access

to controller data until supervisor or data change access codes are entered, and enter hexadecimal values

CLEAR - Pressing the clear key aborts a data entry and restores the current value.

4. Data Key

   a. A data key available for use as a database storage device (backup) or as a database transfer module capable of storing a minimum 256KB of data.

   b. The data key hot swappable, to be inserted and removed without powering down the controller.

   c. The data key capable of storing the entire controller database and shall retain the information without use of battery or capacitor backup.

   d. The data key is not required by the controller to be present during normal operation.

5. Connectors

   a. Accessible interface connectors from the front of the controller. Controller models able to accommodate different versions, as follows:

      (1) EMA TS2 Type 1

      (2) NEMA TS2 Type 2

      (3) NEMA TS1

   b. Connectors and signals compatible with the Econolite Model ASC/2, ASC/2S & ASC -8000 25 pin telemetry port and D connector.

   c. Capable of assigning special applications of input or output function to any input or output pin respectively on the interface connectors, with the exception of Flashing Monitor, Controller Voltage Monitor, AC+, AC-, Chassis Ground, 24 VDC, Logic Ground and TS2 Mode bits.

6. Serviceability

   a. Electronic modules including the power supply easily removable from the front of the controller using a screwdriver as the only tool. Plug in connector for power and signal connections to the circuit boards.

b. Allow the removal and replacement of any circuit boards without unplugging or removing other circuit boards, except for the power supply. No more than two boards shall be attached together to form a circuit assembly.

c. Designed for one side of any circuit board to be accessible for troubleshooting and testing while the controller is still in operation and accomplished without the use of extender cards or card pullers.

B. DISPLAY

1. Dynamic Displays

a. Provide dynamic displays listed below to show the operational status of the controller and offering additional displays for programming. Possible to place vehicle, pedestrian, and preemption calls from the keyboard while displaying status information.

b. Intersection status displaying a summary of ring, phase, coordination, preemption and time-based control status.

c. Controller status display indicating current interval, pedestrian, density, maximum, and maximum extension timing by phase and ring. Display the status of vehicle and pedestrian signal outputs in combination with vehicle and pedestrian calls.

d. Coordinator status display indicating the command source, current coordination pattern information, local and system cycle count, commanded/actual offset, offset correction, time based control status, hold, force off, vehicle permissive, split count down, split extension, offset from ring 1 and green band indications.

e. Preemptor status display indicating priority (railroad, fire, emergency) preemptors and bus preemptors with calls, preemptor active, inhibit, and delay status. When a preemptor is active, the display also indicates preemptor interval, timing, duration, and hold status. A portion of the display indicating the controller status during preemption including current status, interval, and timing by phase and ring and the status of vehicle and pedestrian signals for each phase.

f. Time base status display indicating the current time and date, the current day and week program, the active program step for both coordination pattern and time of day functions, the start time of the next program step, and the highest step used. Also displays the

programmed selections of the active coordination pattern and time of day pattern.

g. Communications status displays for Port 1 (SDLC), Port 2 (terminal) Port 3, Ethernet, and NTCIP.

h. Port 1 (SDLC) status display indicating the frame responses from the MMU, the terminal and facilities BIUs and the detector BIUs.

i. Ports 2 and 3 status display indicating the interconnect format, transmit, valid data, data error, carrier detect and the last valid command.

j. An Ethernet status display indicating the line speed, the line status, the total number of transmitted and received counts and transmitted and received error counts.

k. An NTCIP status display indicating the total number of SNMP and STMP transmitted and received counts.

l. A detector status display indicating activity for up to 64 detectors. The display shows the detector calls as processed by the controller.

m. Flash/malfunction management unit (MMU) status display indicating flash status plus MMU channel, conflict, and monitoring function status. A separate display indicating the results of the controller's comparison of its MMU programming to the programming in the controller.

n. An input and output status display indicating the activity of the logic level inputs and outputs to the controller.

2. Programming Displays

a. Programming displays in the form of menus to aid the operator in entering data from the front -panel keyboard.

b. A main menu allowing the user to select a major function of the controller. A submenu shall then be displayed to allow the user to select a sub -function within the major function. A four arrow cursor key allows the user to scroll through programmed data.

c. English language and traffic engineering terminology shall be used throughout to facilitate programming. The display organization allows traffic personnel to program the controller without using reference cards or manuals. Data entry and data screens shall be in logical order.

d. Programming entries consisting of alpha-numerical values, YES/NO and ON/OFF entries. During program entry, new data is displayed as it is entered. Validated and stored entries only when the consistency check is preformed for entries that are constrained by other programmed data or when the ENTER or cursor key is pressed when they are not.

e. An example of constrained data is the sequence of the phases within a ring. Checked with the phase compatibility, phases in the ring and start phases among others.

f. An example of non-constrained data is the vehicular extension time entry.

g. The keyboard entry software shall include context sensitive help screens. Help information accessed by placing the cursor on the data entry in question then pressing the HELP key. Help screens provided for keyboard entered data and shall include at a minimum range, description, and functional operation information for the data entry.

C. PROGRAMMING

1. Programming Methods

a. Methods listed below shall be available for controller configuration and timing entries. The manufacturer shall be able to provide as off the shelf items firmware and software required to affect the listed methods and to implement network operation with system masters and host PC's.

(1) Manual data entry from the front panel keyboard

(2) Downloading from telemetry from a system master connected to a host PC in a closed loop system.

(3) Downloading from a portable PC-compatible computer via an Ethernet or serial cable.

(4) Transfer from one controller to another using the Ethernet port on each controller.

(5) Transfer from one controller to another, or restoring for a back up copy, using a data transfer module (data key).

2. Programming Security

a. A minimum of three access levels available to provide programming security.

(1) The highest or supervisor level shall have access to programming entries including setting access codes.

(2) The second or data change level shall have access to programming entries except access codes.

(3) The third or data display level shall only have access to displayed data. No access code shall be required to display data.

b. User selectable, four digit access codes provided for the supervisor and data change access levels. Access codes shall initially be set to provide unrestricted access.

c. If there has been no keyboard activity the controller shall automatically logoff the user after 30 minutes.

3. Programming Utility Functions

a. A copy function shall permit copying timing data from one phase to another. It shall also permit copying timing plan from one timing plan to another, one detector plan and detector options plan to another, coordination pattern data from one pattern to another and one sequence to another. This feature will facilitate data entry when programming any two or more phases with the same timing values, or detectors with the same programming, and/or two or more coordination patterns with the same pattern data.

b. The controller unit shall contain a backup data base with user specified values stored in nonvolatile memory. A copy function shall permit transferring the backup database to the active database.

c. A memory clear function shall permit the user to clear data entries for the following controller functions, either individually or all at once:

(1) Configuration

(2) Controller

(3) Coordinator

(4) Preemptor

(5) Time base

(6) Detectors

(7) Logic Processor

d. A sign on message shall allow the user to view the controller software version number. This message shall be displayed upon power up until a key is depressed. It shall also be possible to display the sign on message by keyboard selection. The sign on display shall allow a user defined message of up to two lines with 38 characters per line.

e. The controller shall have the capability to output a memory image of the user programmed settings and intersection configuration data in binary format. This shall allow transferring the memory image data to a data key.

D. ACTUATED CONTROL FUNCTIONS

The controller shall provide actuated control functions and operations required by the NEMA TS2 Standard. In addition, it shall provide the features described in the following paragraphs.

1. Phase Sequence

a. The phase sequence of the controller shall be programmable in any combination of sixteen phases, eight concurrent groups and four timing rings.

b. Phase sequence information shall be changeable from the keyboard and stored in EEPROM data memory.

c. The standard phase sequence of the controller shall also be capable of being altered by coordination, time of day or external alternate sequence command. The alternate sequence commands shall allow reversing the normal phase sequence of each phase pair as shown below:

Command A - reverses phases 1 and 2

Command B - reverses phases 3 and 4

Command C - reverses phases 5 and 6

Command D - reverses phases 7 and 8

Command E - reverses phases 9 and 10

Command F - reverses phases 11 and 12

d. The operator shall be able to select from a library of standard sequences. As a minimum, the following shall be provided:

(1) Standard NTCIP sequence

(2) Two through eight phase controller

(3) Sixteen phase quad left turn controller

(4) Four single ring 4 phase controllers

(5) Dual TS2 eight phase quad controllers

(6) TXDOT three phase diamond controller

(7) TXDOT four phase diamond controller

e. An exclusive pedestrian clearance movement provided that will time and display the pedestrian indications with the vehicle movements remaining in all red.

2. Timing Intervals

a. Timing intervals shall be programmable from 0-255 in one second increments or from 0-25.5 in one tenth second increments, depending on the function.

b. Four independent timing plans provided and selectable on a time of day basis or by coordination pattern. Each plan shall contain the following interval timings:

(1) Minimum Green
(2) Bike Green
(3) Delay Green
(4) Walk
(5) Walk 2
(6) Walk Maximum
(7) Pedestrian Clearance
(8) Pedestrian Clearance 2
(9) Pedestrian Clearance Maximum
(10) Pedestrian Carryover
(11) Vehicle Extension
(12) Vehicle Extension 2
(13) Maximum 1
(14) Maximum 2
(15) Maximum 3
(16) Dynamic Maximum
(17) Dynamic Maximum Step
(18) Yellow Clearance
(19) Red Clearance
(20) Red Maximum
(21) Red Revert
(22) Actuations before Reduction
(23) Seconds per Actuation
(24) Maximum Initial
(25) Time before Reduction
(26) Cars Waiting
(27) Time to Reduce
(28) Min Gap

c. Guaranteed minimum interval values specified at the time of purchase and shall not be changed or overridden from the keyboard. Values provided for the following intervals:

(1) Minimum green
(2) Walk
(3) Pedestrian clearance
(4) Yellow clearance
(5) Red clearance
(6) Red revert
(7) Overlap Green

d. A bike green interval provided that will replace the phase minimum green if the interval time is larger than the min green time and if a detector input designated as a bike detector has been activated.

e. Two Walk and Pedestrian Clearance intervals provided for each phase per timing plan. The second Walk and Pedestrian Clearance activated by a time base action plan.

f. Two vehicle extension intervals provided for each phase per timing plan. The active vehicle extension interval selected by a time base action plan.

g. If enabled, a Delay Green timer shall delay the vehicle phase from starting until the timer has expired. This shall provide an additional all red for the vehicles movement until the timing is complete.

h. The Pedestrian Walk interval shall extend from Walk to the smaller of the Walk Max time or the phase maximum in effect with a constant input from the "Walk Extension detector".

i. Volume density intervals shall include actuations before and cars waiting. Actuations before added shall provide a user specified number of actuations that must occur before adding variable (added) initial time. Cars waiting shall provide a user specified number of actuations, or cars waiting, that must occur before starting gap reduction. Gap reduction shall be initiated by either; time before reduction or cars waiting, whichever reaches its maximum value first.

j. Capable of dynamically extending the maximum green time for each phase based on vehicle demand. Three maximum green intervals shall be selectable per phase based on either time of day, coordination pattern or external input. The initial interval shall be selectable as Max 1, Max 2, or Max 3. If the phase terminates due to max out for two successive cycles, then the maximum green time in effect shall automatically be extended by a dynamic max step

interval on each successive cycle until it is equal to dynamic maximum. If the phase gaps out for two successive cycles, then the maximum green time reduces by the dynamic max step time until it reaches to the original max value.

k. Each phase shall have a red maximum timing interval. An input (red extension) shall extend the all red period of the assigned phase as long as the detector input is true. This input must be true within the all red time of the assigned phase to be able to extend the all red period. If this detector fails then the all red extension feature shall be disabled.

3. Overlaps

a. The controller shall provide sixteen internally generated overlaps (A - P). These shall be individually programmable as standard, other (see Section 5.3.2) or minus green / yellow. The green, yellow and red intervals shall be individually programmable following termination of the parent phase. The overlaps programmed as minus green / yellow overlaps shall provide overlap green when any of the overlap phases are green or when in transition between overlapped phases and a modifier phase is not green. The overlap will be yellow when an overlapped phase is yellow and the modifier phase is not yellow and none of the overlapped phases are next.

b. The other overlap option shall provide for protected, pedestrian protected, not overlap, trailing, leading and advance green programming.

c. A protected overlap shall be green, yellow, or red like a normal overlap except its outputs shall be blank when the protected phase is green, or the controller is transitioning to a non included phase.

d. A pedestrian protected overlap shall be green under the following conditions :

(1) When an included phase is green and the protected pedestrian is NOT in walk or pedestrian clearance

(2) When the controller is in transition between included phases and a pedestrian protected phase is not next

(3) After servicing an included phase pedestrian demand if there is enough time before max out to service the overlap minimum green

e. The controller shall provide the capability of sixteen pedestrian overlaps. These shall be capable of overlapping the pedestrian displays of any combination of phases with a pedestrian movement.

f. Overlap functions shall be programmable from the controller keyboard.

g. The controller shall provide a programmable conditional service feature. When selected, the controller shall service an odd numbered phase once normal service to that phase has been completed and enough time for additional service exists on the concurrent even phase.

h. A conditional service minimum green time shall be programmable for each phase. This interval shall ensure a minimum green if the phase is conditionally served.

i. It shall be possible to program the controller to re-service the even phase after conditionally serving an odd phase. Once an even phase has been conditionally re-serviced, the odd phase shall not be conditionally served again until returning to the concurrent group that is timing.

4. Additional Features

a. The following features shall be programmable for each phase in each of four separate detector plans:

(1) Locking/non-locking detector memory

(2) Vehicle recall

(3) Pedestrian recall

(4) Maximum recall

(5) Soft recall No-rest phase

(6) Enable Added Initial

b. Also programmed by phase shall be:

(1) Phase in use

(2) Exclusive Pedestrian phase

c. Soft recall shall return the controller to the programmed phase in the absence of other calls.

d. If a phase is designated as a no rest phase the controller shall not rest in the phase.

e. The controller shall permit power start and external start to be individually programmed by phase and interval. Start intervals shall be green, yellow red, or yellow with overlaps forced yellow.

f. During a power start condition, the controller shall be capable of timing an all red or flash interval before the power start phase(s) and interval are displayed.

g. The controller shall provide guaranteed passage operation on a per phase basis. When selected, this feature shall provide a full passage (vehicle extension) interval when a phase gaps out with a gap in effect less than the vehicle extension interval (preset gap).

h. The controller shall provide both single and dual entry operation. When selected, dual entry shall cause the controller to ensure that one phase is timing in each ring.

i. It shall be possible via keyboard selection to inhibit the service of a phase with other phase(s) within the same concurrent group.

j. The controller shall provide the following additional selectable pedestrian functions:

(1) Actuated phase rest in WALK

(2) Flashing WALK output

(3) Pedestrian clearance protection during manual control

(4) Pedestrian clearance through yellow

(5) Pedestrian indications remain dark with no call

(6) Pedestrian timing shall be capable of being carried over from one phase to another

(7) Programming shall be provided to inhibit re-service of odd phases (left turns) within the same concurrent group.

k. The controller shall provide a programmable simultaneous gap termination feature. When programmed, phases in both rings shall gap out together in order to terminate the green interval and cross the barrier.

l. The controller shall provide automatic flash selection according to the requirements of the MUTCD. Both the flash entrance and exit phases shall be programmable through the keyboard, and flashing shall be controlled by either setting the fault/voltage monitor output to be FALSE or by flashing through the load switch driver outputs. If flash desired through the load switches, both the phase and flash overlap outputs either yellow or red as selected by the operator. Automatic flash will be selectable by external input, system command, or time of day action plan.

m. The controller provides dimming for selectable load switch outputs. Dimming will be accomplished by inhibiting the selected outputs for alternate half cycles of the 120 VAC line. Dimming controllable by time of day and an external input; both functions must be TRUE for dimming to occur. Programming permits individual dimming of the Green/Walk, Yellow/Ped Clear, Red/Don't Walk outputs for each load switch.

E. COORDINATION

Coordination functions to control intersection cycle lengths, system offset relationships, and phase split percentages provided as a standard feature, with no need for additional modules or software.

1. Coordination Patterns

a. Provide a minimum of 120 coordination patterns. Each pattern allows selection of an independent cycle length, offset value and split pattern. The coordination patterns selected using telemetry (system), hardwire, or non-interconnected (time base) coordination commands.

b. The coordination patterns selected by the coordination command using the following formats:

Pattern. This format allows selecting the coordination patterns directly, that is, commanding Plan 1 selects Pattern 1. Pattern command includes 1-120 patterns, pattern 254 shall select free and pattern 255 shall select flash.

Standard. This format allows selecting the coordination patterns using a pattern number derived from a cycle offset split command. Each pattern assignable to a specific cycle offset split combination. The coordination pattern selected using the formula

$$(((\text{Cycle} - 1) * 20) + ((\text{Split} - 1) * 5) + \text{Offset})).$$

TS2. This format allows selecting the coordination patterns as a function of Timing Plan and one of three offsets. With this format a minimum of 20 Timing Plans available for selection of one of sixty coordination patterns.

c. The following functions programmable in each coordination pattern:

(1) Cycle length

(2) Split pattern

(3) Offset value

(4) Alternate phase sequence

(5) Split and offset in seconds or percentage

(6) Crossing artery pattern

(7) Permissive timing

(8) Action plan

(9) Coordinated phase split extension

(10) Timing plan

(11) Actuated rest in walk

(12) Phase re-service

(13) Ring extension

(14) Split demand pattern

(15) Ring displacement

(16) Directed split preferences

(17) Special function outputs

d. The following functions shall be programmable for each of the 120 Split patterns:

(1) Coordinated phase

(2) Split value by phase

(3) Omit by phase

(4) Min recall by phase

(5) Max recall by phase

(6) Pedestrian recall

(7) Max and Pedestrian recall

2. Cycle Length

a. One cycle length provided for each coordination pattern. The cycle adjustable over a range of 30-255 seconds in 1-second increments.

b. The cycle length serves as the reference time for coordination timing. 6.3. Synchronization

c. For systems with a single system sync pulse, coordination timing synchronized to the leading edge of that pulse that serves as the master zero reference for offset timing.

d. For hardwire systems with multiple sync pulses, the coordinator locks onto the correct sync by trying different syncs and checking for reoccurrence during successive cycles.

e. After a valid system sync pulse has been received the coordinator checks for the proper occurrence of the system sync pulse during each subsequent cycle. If a sync pulse does not occur, the coordinator self syncs and continue to operate with the last set of coordination commands for a programmable number of cycles from 0-255. If a sync pulse does not occur within the programmed period (or until the first sync pulse is received), the coordinator shall revert to the non-interconnected coordination mode.

3. Offset

a. Offset normally defined as the time period from the system sync pulse to the beginning of the leading coordinated phase green (local zero). The coordinator capable of referencing the offset to the beginning of the lagging coordinated phase green, coordinated phase yield or start of yellow point.

b. Offsets shall be programmable using both percent and seconds. The range is from 0-99% of the cycle length in 1% increments or 0-254 seconds in 1 second increments. An offset value of 255 results in free.

c. Offset changes achieved by adding or subtracting cycle time over a maximum of three cycle periods to allow a smooth transition to the new offset. Other offset change methods may be to add 20% to each cycle or to snap to the sync point once the permissive periods are complete and the coordinated phases are green. Offset correction using dwell also selectable.

4. Split

a. Each split provides a split interval for each of sixteen phases. The split interval is programmable using percent or seconds. The range is from 0-99% of the cycle length in 1% increments or 0-255 seconds in 1 second increments.

b. Split interval settings determine the maximum time, including vehicle clearance (yellow and red), for a non-coordinated phase, or the minimum time for a coordinated phase. Phase termination controlled by establishing a force off point for each phase within the cycle. Except for the coordinated phases the force off point is selectable to be a fixed point within the cycle or allowed to float. If

floating force offs are selected each phase shall time no more than its own split interval.

c. During coordination, it shall be possible to operate a coordinated phase as actuated or non-actuated. If a coordinated phase is actuated, vehicle detections shall permit the coordinator to extend a phase beyond the normal yield point. Extended coordinated phase green shall be selectable using the same range as split interval settings (percent or seconds). If actuated coordinated phases are used they shall be able to have actuated or non-actuated (walk rest) pedestrian movements.

5. Permissive Periods

a. Permissive periods provided to control the time period during coordinated phases released to service calls on non-coordinated phases.

b. Permissive timing begins at the lead coordinated phase yield point. A yield point automatically computed for the coordinated phase in each ring. The coordinated phase yield point allows the coordinated phases to yield independent of each other. The yield point is the point that the coordinated phase is released to allow the controller to service calls on non-coordinated phases. The computation takes into account the coordinated phase split interval plus pedestrian and vehicle clearance times.

c. Automatic permissive period operation provided by automatically calculating a permissive period for each non-coordinated phase. The permissive period shall consist of a separate vehicle and pedestrian period computed from the phase split interval and the vehicle/pedestrian minimum time. The controller answers a call only during the associated phase permissive period. However, once the controller has been released to answer a call, remaining phases are served in normal sequence.

d. Single permissive period operation provided by defining a single time period per cycle beginning with the yield point during which the controller is allowed to answer phase calls for any phase. The duration of this period will be selectable in each coordination pattern.

e. Dual permissive period operation provided. During the first permissive period, the controller answers only vehicle or pedestrian calls on the phases following the coordinated phase. If the controller services a call during this period, calls on the remaining phases are served in normal rotation. During the second

permissive period, the controller shall answer calls on remaining phases except the first permissive phase. The duration of the two permissive periods, and the time to start the second permissive period (displacement), will be selectable in each coordination pattern.

6. Phase Re-service

   a. If actuated coordinated phases are in use, it shall be possible to re-service non-coordinated phases within the same cycle if sufficient time remains. A phase shall be re-serviced only if the permissive period for the phase indicates there is sufficient time remaining in the cycle to service the phase.

   b. Phase re-service shall be capable of being enabled/ disabled in each coordination pattern.

7. Transition Cycles

   a. The controller provides a smooth and orderly transition when changing from free operation to coordinated operation and from one coordination command to another.

   b. During a free to coordinated transition, the controller shall initiate a pick up cycle beginning upon receipt of a sync pulse and a valid coordination command. The controller shall then enter coordination mode upon crossing a barrier or if resting in the coordinated phases.

   c. Each coordination command selects a pattern. A command change implements concurrent with a sync pulse. Cycle, offset, and split changes does not take effect until local zero.

8. Crossing Artery Control

   a. The coordinator capable of implementing dual coordination at an intersection where two arterials are under control of separate masters.

   b. An external input enables dual coordination. Once enabled, the coordinator places a continuous call on the crossing artery phases so as to ensure that these remain green for their full split interval.

   c. The coordinator outputs a crossing artery sync signal to indicate the beginning of the crossing artery phase split interval.

d. Dual coordination forces a selectable crossing artery split plan to be used so as to allow a particular split to be optimized for dual coordination in each coordination pattern.

9. Local Split Demand

a. The coordinator provides a minimum of two split demand detector inputs that allow the selection of a preferred split plan based on intersection demand.

b. If the split demand detector indicates continuous vehicle presence during a programmed monitoring period beginning with the onset of a selected phase green, the coordinator forces a selectable split plan to be in effect during the next cycle. This split plan remains in effect for a selected number of cycles from 0 - 255. A specific split plan is capable of being selected in each coordination pattern.

10. Adaptive Split Demand

The coordinator provides a method to select the split using measurement of each phase's green utilization. From the measurement, the coordinator determines which phase or phases had excess time that was not used during the last measurement period. Then the excess time is added to the first set of preferential phases. If the first set of preferential phases gapped out during the last measurement period, then the excess time will be added to a second set of preferential phases. If both sets of preferential phases gapped out during the last measurement period then the time shall be added to the beginning of the coordinated phases.

11. Free Mode

a. The coordinator provides a free mode of operation, where coordination control is removed.

b. Free mode operation is selectable by coordination commands, by external input or by keyboard entry.

c. The coordinator reverts to the free mode when active controller inputs or functions would interfere with coordination. Such inputs or functions include the following:

(1) Manual control enable

(2) Stop time

(3) Automatic flash

(4) Preemption

d. The coordinator provides an active free mode, where coordination control is removed but the coordinator continues to monitor system sync so as to keep its timing in step with the system master.

12. Manual Control

The controller allows manual override of the current coordination command from the keyboard. The manual command allows selection of coordination patterns to be in effect.

13. Interconnect Modes

a. The coordinator capable of operating with any of the following interconnects types:

(1) Non-interconnected coordination (time-based)

(2) Telemetry

(3) Hardwired

b. The coordinator is compatible with fixed time interconnect that provides the sync pulse superimposed on the offset lines. Also operates within an interconnected system using a separate sync line. The non-interconnected coordination mode serves as a backup when using telemetry or hardwired interconnect.

14. Master Coordinator

The coordinator shall output the coordination command, including sync pulse. This will permit the controller to be used as a time of day master in a hardwired interconnected system.

F. PREEMPTION

The controller shall provide a minimum of ten preemption sequences that can be programmed as either railroad-fire emergency or bus vehicle preemption sequences. Preemption capability standard and not requiring additional modules or software:

1. Railroad-Fire-Emergency Vehicle Preemption

a. The ten railroad fire emergency vehicle preemptors selectable as a priority or non-priority Type. Priority preemptor calls overriding non-priority preemptor calls. Low numbered priority preemptors overriding higher numbered priority preemptor calls. Non-priority preemptor calls serviced in the order received.

b. Each preemptor providing a locking and non-locking memory feature for preemptor calls. If a preemptor is in the non-locking mode and a call is received and dropped during the delay time, the preemptor is not serviced.

c. Preemptor timing intervals programmable from 0 - 255 in one-second increments or 0 -25.5 in one-tenth second increments, depending on function. Delay, max presence, and duration timing intervals programmed from 0 – 65535 seconds in one-second increments.

d. A programmable delay time interval shall be provided to inhibit the start of the preemption sequence. This interval shall begin timing upon receipt of a preemption call. This time shall be programmable from 0 - 255 seconds in one second increments.

e. An inhibit time shall be provided as the last portion of the delay time interval. During this time, phases that are not part of the preempt sequence shall be inhibited from service. This time shall be programmable from 0 - 65535 seconds in one second increments.

f. A programmable extend input causing the preemptor to remain in the dwell interval following the removal of the preempt call. If a preempt call is reapplied during this time, the preemptor shall revert to start of dwell interval. This time is programmable from 0 - 25.5 seconds in one tenth second increments.

g. A programmable duration time provided to control the minimum time that a preemptor remains active. This time is programmable from 0 - 65535 seconds in one second increments.

h. A programmable maximum time provided to control the maximum time that a preemptor input remains active and still be recognized by the controller. Once failed, the input must return to inactive state to be recognized again.

i. Phase timing at the beginning of a preemption sequence remains in effect for a minimum time before the controller advances to the next sequential interval. If the phase has been timing for longer than the programmed preemptor minimum time, the controller shall immediately advance to the next sequential interval. Minimum times shall be programmable for the following intervals:

   (1) Green/walk/pedestrian clearance

   (2) Yellow

   (3) Red

j. A phase shall advance immediately to pedestrian clearance if it has been timing a WALK interval at the beginning of a preemption sequence. It shall be possible to time the minimum pedestrian clearance through the yellow interval, or alternately to advance immediately to yellow. During preemption, pedestrian indicators is selectable as being a solid DONT WALK, OFF (blank) or fully operational.

k. If an overlap is in effect when the preemption sequence begins, it shall be possible to terminate the overlap so that it remains red for the remainder of the preemption sequence. Overlaps terminating or forced to terminate shall time the preemptor minimum yellow and red clearance times.

l. Each preemptor provides user programmable green, yellow, and red track clearance intervals. Timing begins immediately after the preemptor minimum red interval.

m. Up to four permissive phases selectable as track clearance phases. During the track clearance period, the selected phases times the track clearance green, yellow and red intervals once, and then advance to the hold interval. If track clearance phases are not selected the track clearance interval omitted from the preempt sequence and is the controller interval timing used if track clearance interval times have been programmed as zero.

n. The preemption hold interval begins immediately after track clearance. It remains in effect until the preemptor duration time and minimum hold times have elapsed and the preemptor call has been removed or the preemptor maximum time has been exceeded. During the preemption hold interval, any one of the following conditions shall be selectable:

(1) Hold phase green

(2) Limited phase service

(3) All red

(4) Flash

o. Any valid phase, except a track clearance phase, selectable as a hold phase. If hold phases are not selected, the controller remains in all red during the hold interval. If flash is selected for the hold interval, up to two permissive phases shall be selectable to flash yellow, and the remaining phases shall flash red. Overlaps associated with the phases flashing yellow also flashes yellow unless they have been forced to terminate, in which case flashes remain red.

p. The preemptor shall immediately cause flashing operation if the preemption input and the track interlock input are not in opposite states and the track interlock function is enabled.

q. Each preemptor provides a user programmable green, yellow, and red hold interval, during which the hold phase(s) shall operate normally, except that the minimum green interval time shall equal the hold green time. At the completion of the hold green interval, the controller times the hold yellow and red clearance intervals before transfer to the exit phases.

r. Up to four permissive exit phases will be selectable to time after the preemption sequence is completed serving as transition phases to return the controller to normal operation. It shall also be possible to place calls on selected phases upon exiting preemption. The option causes the preemptor to exit preemption to the correct phase to maintain coordination.

s. Each preemptor provides a user programmable exit maximum time. Upon exiting the preemption sequence, times shall serve as the maximum green time effective for one controller cycle for all phases except hold phases.

t. Preemptor linking permits preemption sequences, where lower priority preemptors may call the higher priority preemptors from their preemption sequence.

u. Preemptor active outputs provided for each of the preemptors. The output sets to ON when the preemption sequence begins and remains ON for the duration of the sequence. Possible to program preempt active outputs to be ON only during preempt hold intervals. Additionally, it shall be possible to program the non-active, non-priority preemptor outputs to flash while another preemptor is active.

v. Preemptors normally override automatic flash. It will be possible to inhibit this feature for each preemptor.

2. Bus Preemption

a. Ten bus preemptors provide control for bus or other low priority vehicles. Bus preemptors have low priority and are overridden by railroad/fire/emergency vehicle preemptor calls.

b. The preemptor is programmed to accept either a 6.25 pulse per second signal with a 50% duty cycle or a solid input to identify a

bus preemptor call. Bus preemptor calls shall be capable of preemptor call memory and served in the order received.

c. Bus preemptor timing intervals programmable from 0 - 255 in one second increments or 0 - 25.5 in one tenth second increments depending on the function.

d. A re-service time provided to avoid excessive utilization of the same bus preemptor. If a call is received before the re-service time has elapsed, the bus preemptor shall not be re-serviced. If re-service time has not been entered then all phases with a call when leaving the bus preemption sequence shall be serviced before the bus preemptor may be served again.

e. Bus preemptors shall provide delay, inhibit, and maximum time functions similar to those for railroad/fire/emergency vehicle preemptors described above.

f. Bus preemptors shall provide the following entrance intervals:

(1) Green/walk/pedestrian clearance

(2) Yellow

(3) Red

g. At the completion of the entrance red clearance, the bus preemptor shall advance to the hold green interval. During this interval, up to four permissive phases shall be selectable to remain green until the minimum hold time has elapsed and the bus preemptor call has been removed or the preemptor maximum time has been exceeded.

h. It shall be possible to program the controller to allow concurrent phases to be serviced for a bus preemptor with only one phase selected as the hold interval phase.

3. Preemption Safeguards

a. If a preemptor call is active when power is restored to a controller, the fault/voltage monitor output shall be set to FALSE, placing the intersection in flash. Similarly, if external start is applied during a preemption sequence, the intersection shall be set to flash. Intersection flash shall remain in effect until the preemptor call has been removed and the preemptor duration time has elapsed.

b. An input provided to stop timing of the current active preemptor under control of the MMU/CMU.

c. A preemptor safety interlock provided to cause the intersection to go into flash whenever the controller has been removed or has not been programmed for preemption. This is achieved with an appropriate signal to the MMU/CMU.

4. Transit Signal Priority

a. The controller includes a transit signal priority algorithm that provides for transit vehicle movement through the intersection, while not interrupting coordination or skipping phases.

b. Provide a check in detector input that senses the arrival of the transit vehicle. When active this input initiates Transit Signal Priority (TSP).

c. A TSP delay shall delay the beginning of TSP operation until a set interval after check in.

d. A check out detector input shall determine the departure of the transit vehicle.

e. Assignment of a single pulse from the check in detector and check out detector to the controller inputs programmable to any controller input. Including, inputs from devices that continuously pulse (pulsing as long as the vehicle requires TSP) through EVP 1 - 4, for a controller with a C1 connector, or through Preemptor inputs 3 – 6, on a controller with an MSD connector.

f. When under coordination the TSP sequence shall use alternate split times to accommodate transit vehicles while maintaining coordination.

g. When under free operation the TSP sequence uses alternate maximum times to accommodate transit vehicle while not skipping phase.

G. TIME-BASED CONTROL & NON-INTERCONNECTED COORDINATION

The controller shall include time based control. This capability is a standard feature and shall not require additional modules or software.

1. Clock/Calendar Functions

a. The controller shall provide a time of day (TOD) clock that is used for all time based control functions. The only required clock settings are the current time (hour, minute and second) and date (month, day and year). Day of week and week of year are

automatically computed from the date setting. Also possible to set the number of hours that the local standard time is ahead or behind Greenwich Mean Time.

b. During normal operation, the TOD clock shall use the power line frequency as its time base. When power is removed, a crystal oscillator maintains the time for up to 30 days. The oscillator has a timing accuracy of +/ - 0.005% over the entire NEMA temperature range as compared to the Universal Coordinated Time Standard.

c. In addition to entering time and date via the keyboard, it is possible to download the information from another controller, a computer, or a system master.

d. The controller includes a time reset input. This feature resets the TOD clock to 03:30 whenever the time reset input is TRUE.

e. The TOD clock automatically compensates for leap year and shall be programmable to automatically switch to daylight savings time.

2. Time Based Control

a. Time based control utilizes a day plan program format. The month program consists of 200 programmable schedules, each assignable to one of sixteen day programs. Each day program consists of from 1 to 50 program steps that define a program for the entire day. Each program step is programmed with a starting time and an action plan number. The day plans are also assigned to days of the week and days of the month.

b. Time based control shall use action plans to assign:

(1) Coordination pattern number

(2) Vehicle detector plan number

(3) Controller sequence

(4) Timing plan

(5) Vehicle detector diagnostic plan

(6) Pedestrian detector diagnostic plan

c. Time based control shall also use action plans to enable:

(1) Automatic flash

(2) System override

(3) Detector log

(4) Dimming

(5) Special functions

(6) Auxiliary functions

(7) By-Phase functions
   (a) Pedestrian recall - Walk 2 enable
   (b) Vehicle extension 2 enable
   (c) Vehicle recall
   (d) Vehicle max recall
   (e) Max 2 enable - Max 3 enable
   (f) Conditional service inhibit
   (g) Phase omit

d. A minimum of 36 holiday or exception day programs that override the normal day program. Holiday programs capable of being set as floating (occurs on a specific day and week of the month) or fixed (occurs on a specific day of the year) and, possible to program a fixed holiday so that it automatically repeats in the following year.

e. Possible to manually force any of the action plans to override the current action plan. The forced plan entered from the keyboard and remains in effect until removed.

3. Non-Interconnected Coordination

a. A minimum of 200 time base schedule programs shall be available for the day-programs. These shall not have to be entered in any special sequence. It shall be possible to add and delete steps from a day program without affecting any other day-program. Each of the program steps shall permit selection of the following functions:

(1) Day program assignment

(2) Start time

(3) Action plan

b. Selection of system override in an action plan allows the coordination pattern selected by the action plan to override the current telemetry or hardwire system commanded coordination pattern.

c. When operating in the non-interconnected coordination mode the synchronization point for cycles references to a user selected reference time (sync reference), last event or last sync as selected from the keyboard. The sync reference time is that time at that cycles are reset to zero.

d. If the sync reference time is selected, the synchronization point for the cycle selected by the current program step is computed using

the present time, sync reference time, and cycle length. The synchronization point occurs whenever the present time is an even number of cycle length periods has occurred since the sync reference time.

H. DETECTORS

1. Detector Functions

The controller provides a minimum of 64 vehicle detector inputs. Each input is assignable to any phase and programmable as to detector function. Extend and delay timing is provided for each detector. Each detector is capable of operating in a lock or non-lock mode. The controller is capable of providing 16 pedestrian detector inputs. Each pedestrian detector shall be assignable to any phase.

2. Detector Cross Switching

The controller provides detector cross switching that permits vehicle detectors to alternately place calls on assigned phases and assigned cross switch phases. If the assigned phase is not green and the cross-switch phase is green, the detector places calls on the cross switch phase. If the assigned phase is omitted, for any reason, the detector places calls on the cross switch phase.

3. Detector Types

Each vehicle detector is user programmable to operate as one of the following 3 detector types:

Type 0 (zero): supports all NTCIP or standard detector functionality.

Type 1: (GREEN DELAY) The first detection received when the phase goes green is recognized immediately, whether the detector is active when green starts or is activated after the green is timing. Detections received before the first timeout of the extension interval are also recognized immediately. Once the detector extension interval (not the phase extension interval) times out, further detector inputs are recognized only if continuously present for a period equal to the programmed delay time AND the delayed signal is NOT extended. The first detection received when the phase goes green, whether present when green starts or received later, is recognized immediately. Detections received before the first timeout of the extension interval are also recognized immediately. Once the detector extension interval (not the phase extension interval) times out, further detector inputs are recognized only if continuously

present for a period equal to the programmed delay time AND the delayed signal is NOT extended.

Type 2: (STOP BAR WITH EXTEND TIME AND RESET) The detector input must be true when assigned phase green starts else the detector is disconnected for the balance of phase green. If the detector input is true when phase green starts the extension timer is reset while the input remains true. When the detector input is removed the extension timer begins running. If another detector input is received before extension time expires, the extension timer is reset for the duration of the input and once again begins timing when the input goes false. This action is repeated until the extension timer times out, at which time it is disconnected for the balance of phase green.

4. System Detectors

a. Each detector input shall be capable of functioning as one of 16 system detectors.

b. Vehicle detectors shall be capable of being assigned to a minimum of 16 speed detectors. Speed shall be detected using both one and two detector configurations. Speed shall be computed using a keyboard entered average vehicle length and loop length for a one detector configuration. When using two detectors, speed shall be calculated using a keyboard entered distance between detectors and travel time between detectors.

I. SYSTEM COMMUNICATION

1. On-Street Master Communications

The controller is capable of communicating with an on street system master. This capability provided by a separate telemetry module that is included in the controller when required by the plans and specifications. The telemetry module receives system master commands and data transmissions. In addition, it transmits the controller status, data base and system detector information to the system master.

2. System Commands

a. The telemetry module allows the controller to receive, as a minimum, the following commands:

(1) Cycle, offset, and split (coordination pattern)

(2) System sync

(3) Special function commands (minimum of four)

(4) Free and flash mode commands

(5) Time and date

(6) Request for local status

(7) Recall to Max

b. Commands must occur more than once in any three second period in order to be recognized.

c. Mode and special function commands cleared after 20 minutes of loss of communication between controller and system master.

d. Status Data – The status of each of the following functions shall be transmitted to the system master in response to a local status request:

(1) Green and yellow status for all phases and overlaps

(2) Walk and pedestrian clearance status for all phases

(3) Vehicle and pedestrian detector status

(4) Phase termination status

(5) Local time

(6) Coordination status

(7) Command source

(8) Sync or transitioning status of coordinator

(9) Conflict flash status

(10) Local flash status

(11) Preempt activity and calls

(12) Volume and occupancy data from a minimum of 16 system detectors

(13) Speed data from a minimum of two speed detectors

(14) Maintenance required (cabinet door open) status

(15) Status of two user-defined alarms

e. Split Reporting – The status of each of the following parameters calculated on a per-cycle basis and transmitted to the system master:

(1) Actual time spent in each phase

(2) Time of day at end of cycle

(3) Phases forced off during cycle

(4) Type of coordination operation

(5) Whether transitioning to new offset

(6) Cycle, offset, and split in effect during last cycle

(7) Flash status if operation is Free

f. Upload/Download Capability – The telemetry module provides the capability to upload/download the entire intersection database. Phase assignments for overlaps and preemptors are not to be downloaded to preclude unsafe controller operation. It is possible to inhibit downloading of phases in use and left turn head control. Data transfer shall not require the intersection to be in flash.

3. Telemetry

a. Telemetry shall utilize TDM/FSK data transmission from 1200 baud to 9600 baud over two pairs of wires. These may be leased lines (Type 3002, voice grade, unconditioned) or dedicated cable. Optional fiber optic communications capability shall also be available.

b. The nominal transmitter output level shall be 0 dBm into a 600 ohm load. The receiver sensitivity shall be -34 dBm and adjustable from -40 to +6 dBm.

c. Parity and error checking employed to assure transmission and reception of valid data. Indicators provided on the telemetry module to show telemetry activity as follows: transmit, receive carrier, and valid data.

d. In the event of a telemetry failure, the controller shall revert to the non-interconnected coordination mode after it has self synchronized for a number of cycles, which shall be selectable from 0-255.

4. Communications Protocols

The controller has the capability of supporting communications with traffic management systems using industry standard protocols with the installation of appropriate optional software. At a minimum the controller has optional software to support the following protocols:

- CalTrans AB3418
- ECPIP
- NTCIP

Level 2 as defined by Section 3.3.6 of NEMA TS2 - 2003. NTCIP v02.06 capabilities shall include for NTCIP mandatory and optional objects. The controller vendor provides access to controller data via vendor specific objects. These and other objects supported by the controller are defined in a standard MIB file.

5. Ethernet Communications

The controller has the capability of supporting communications through Ethernet. This communications uses internal circuitry. The Ethernet port supports auto sensing of 10/100 Base T and half or full duplex operation.

6. External Clock

The controller has the capability of communicating with an external clock like a GPS or WWV clock in order to set its internal time of day clock.

7. Communications Ports

a. The controller shall have as a minimum the following internal communications ports:

(1) Port 1- SDLC for communications to other devices in the cabinet

(2) Port 2 - Terminal port for communications with a computer for the purposes of uploading, downloading or upgrading the controller software

(3) Port 3 - Systems communications port. This port provides either communicate to an on-street master or a central computer system

(4) An option circuit board is available to expand communications by adding two additional serial communications ports

b. Serial communications shall operate at 1200 to 115.2 K baud

J. DIAGNOSTICS

1. General Diagnostics Features

a. The controller includes both automatic and operator initiated diagnostics. This capability is a standard feature and shall not require additional modules or software.

b. Automatic diagnostics verifies memory, MMU compatibility programming, and microprocessor operation each time power is reapplied to the controller. After power has been applied,

diagnostics continually verify the operation of essential elements of the controller including at a minimum: PROM, EE PROM, communications, and the microprocessor.

c. Operator initiated diagnostics allows the operator to verify proper operation of controller input, output, communications, keyboard, and display functions. Both manual and automatic test modes are provided.

2. Detector Diagnostics

a. Time of day controlled detector diagnostics provided to allow testing vehicle and pedestrian detectors for no activity, maximum presence, and erratic output.

b. A minimum of eight detector diagnostic plans provided. These plans shall be selectable on a time-of-¬day basis. This allows varying the detector diagnostic intervals to correspond with changes in detector activity.

c. If a detector is diagnosed as failed, the associated phase is placed in one of the following keyboard selectable modes:

(1) Detector fail recall from 1 to 255 seconds

(2) Maximum Recall

(3) Disable the detector from calling or extending.

d. Diagnostics for NEMA TS2 detectors connected to the controller using a Bus Interface Unit (BIU) shall also include detection of watchdog, open and shorted loop, and excessive inductance change failures.

K. LOGGING

The controller shall be capable of logging and reporting detector activity, detector failures, and the occurrence of selected events or alarms. Logs shall be capable of being printed or displayed on the front of the controller.

1. Detector Logging

a. The controller includes a detector log buffer capable of logging volume, occupancy and average speed for selected vehicle and speed detectors.

b. The detector logging interval has keyboard selectable as 5, 15, 30, or 60 minutes.

c. Detector logging is capable of being enabled or disabled by time of day.

2. Detector Failure Logging

a. The controller includes a detector failure log buffer capable of storing a minimum of 100 time and date¬ stamped detector failure events. Once logged, detector failure events remain in the log until cleared or the log buffer capacity is exceeded at which time the oldest detector failure events shall be overwritten.

b. Detector diagnostic failures are recorded in the detector failure log including: no activity, maximum presence, erratic output, watchdog failure, open loop, shorted loop, and excessive inductance change. If a detector recovers after a diagnostic failure, a detector on-line event shall be stored in the detector failure log.

c. Detector failure logging shall be capable of being disabled.

3. Event Logging

a. The controller includes an event log buffer capable of storing a minimum of 200 time and date stamped events or alarms. Once logged, events remains in the buffer until cleared or the log buffer capacity is exceeded at which time the oldest events shall be overwritten.

b. At a minimum the following events logged: communication failures, coordination faults, MMU and local flash status, preempt, power ON/OFF, low battery, and status of a minimum of two alarm inputs, and an on line event logged when an event or alarm returns to normal status.

c. If security is enabled, an event logged when a user enters a data change. This event includes the user's ID. It is necessary to log the first change only and not every change. Also an entry is recorded when a user logs in and out of the controller.

d. Event logging shall be capable of being enabled or disabled for each category of event or alarm.

4. OE logging

a. The controller accumulates phase utilization data, phase termination data, and detector data for a number of cycles selectable by the operator.

b. The MOE log includes the number of gap outs, force offs and max outs per phase.

c. The MOE log includes the mode of operation and phase utilization. If the controller is operating under coordination, the log shall include the pattern in effect and the average phase split for each period. If the controller is operating free, the log shall include the timing plan (1 – 4), the maximum in effect and the average phase maximum for each period.

d. Each logged period includes the volume, number of stops and the delay per phase.

e. Each log period records the number of times a phase was skipped and the number of times walk was served per phase.

L. EMULATION

Emulation Software. With each controller provide software designed to emulate the controller. The emulation software shall employ the full functionality of the controller including but not limited to:

Configuration, timing, coordination, preemption, time base, detector setup, status display, utilities including special logic and diagnostic information.

The software shall employ a graphical user interface that looks and acts like the controller. The software shall be designed to operate on the latest Microsoft Windows operating system and be capable of direct interface with the latest version of Transoft Synchro traffic modeling software.

Article 17.3 Standard Auxiliary Equipment

Provide equipment meeting the requirements of Section 6 of the NEMA Standard Publication TS 2-2003 V02.06, Traffic Controller Assemblies with NTCIP Requirements (NEMA TS-2).

A. Three Circuit Solid State Load Switches. The cabinet shall come with (16) load switches. All load switches shall be cube type and have LED indications for both the input and output side of the load. The load switches shall be PDC model SSS87I/O or approved equivalent.

B. Solid State Flasher. The cabinet shall come with (1) flasher. The flasher shall be cube type and have LED indications. The flasher shall be PDC model SSF87 or approved equivalent.

C. Malfunction Management Unit (MMU). The cabinet shall come with two (2) (MMU's) that meets all the requirements of NEMA TS2-2003 while remaining

downward compatible with NEMA TS1. It shall have (2) high contrast LCD displays and an internal diagnostic wizard. It shall come with a 10/100 ethernet port. It shall come with software to run flashing yellow arrow operation. The MMU's shall be an Eberle Design, Inc. model MMU2-16LEip or approved equivalent.

D. Flash Transfer Relay. The cabinet shall come with (8) heavy duty flash transfer relays. The flash transfer relays. The relays shall be Detrol Controls model 295 or approved equivalent.

E. Inductive Loop Detectors Units. Provide sixteen (16) inductive loop detectors that conform to the requirements of NEMA TS-2, Section 6.5 Inductive Loop Detector Units. Unless otherwise called for in the Plans provide 4 Channel Inductive Loop Detectors.

The loop amplifiers shall be Eberle Design, Inc. model ORACLE4e or approved equivalent.

F. Local Coordination Units. Provide actuated coordination that conforms to the requirements of NEMA TS-2, Section 3.6 Actuated Coordination.

G. System Modem/Interface Unit. The cabinet shall come with an 8 pair copper ethernet switch. Four ports of 10/100TX and a 1000base SFP port. The ethernet switch shall support all of the following minimum requirements; EFMplus technology, virtual local area networks (VLAN) tagging (IEEE 802.1q) and dynamic bridging (IEEE 802.1). The copper ethernet device shall provide for communication over copper pairs split into two directions and the high speed link shall be over bonded copper pairs (IEEE 802.3ah 2Base-TL. The copper ethernet switch shall be an Actelis Networks model ML688 or approved equivalent. The following items shall be supplied with the copper ethernet switch:

1. Two quad DSL cables 504R20110
2. One AC power adapter 506R00005
3. Four Cat6 patch cables three feet
4. One SFP Optics 1000base SX MM 850nm LC 506R00012
5. Carrier-class element management system

H. Preemption Units. Provide preemption that conforms to the requirements of NEMA TS-2, Section 3.7 Preemption and the following:

Install the following components of the GTT Company's Opticom Priority Control System according to GTT's written installation instructions at the signalized intersections listed on the Drawings.

1. The system must be capable of sending a signal to the controller when an Opticom signal from a vehicle-mounted "GTT OPTICOM Emitter" has been received and maintained for a period of 1.7 seconds.

2. Use Opticom Priority Control System Model 792H emitters.

3. Unless otherwise shown on the Plan use Opticom Traffic Control Systems Opticom Detector Model 721 preemption detectors.

4. Furnish two (2) Opticom Traffic Control Systems 764 Phase Selectors. Use rack mounted phase selectors.

5. The controller cabinet shall be wired with a Model 768 Auxiliary Interface Panel and a Model 757 Auxiliary Harness for the full utilization of all auxiliary detector and green sensing operations of the 764 Phase Selectors.

6. The controller, rather than the phase selector or auxiliary logic, must perform interval timing, signal sequences, and phase skips.

7. When emitters are required, provide GTT Opticom Priority Control System, Model 792H Emitter with 793 in vehicle switch. The Emitter shall be factory programmed to the class and vehicle identification numbers assigned by jurisdiction as shown in the Drawings and the following:

    a. Class 0 and Vehicle ID. Number 0 (Zero) shall be disabled for Emitters.
    b. Vehicle Id. Numbers shall be sequential, beginning with the lowest number in the EVP Emitter table for the appropriate class.
    c. Provide one copy of 790IS Emitter Software Kit including "Y" cable.
    d. One GTT Opticom Portable Emitter Kit with 792R emitter on a magnetic base, 793R switch and cigarette lighter adapter power cord in a "Camera Bag" case.

I. Bus Interface Unit (BIU). Provide six (6) BIUs that fully meet the requirements of NEMA TS-2 Section 8. Unless otherwise called for in the Plans provide BIUs that meet the NEMA designation BIU2. All BIUs shall provide separate front panel indicator LED's for DC power status and SDLC Port 1 transmit and receive status. The (BIU)'s shall be Eberle Design, Inc. model BIU700 or approved equivalent.

J. Power supply. Provide a shelf mounted power supply that conforms to the requirements of NEMA TS-2 Section 5.3. The power supply shall be Eberle Design, Inc. model PS250 or approved equivalent.

Article 17.4 Special Auxiliary Equipment

When identified on the Drawings, provide equipment meeting the requirements of the cited Sections of the NEMA Standard Publication TS 2-2003 V02.06, Traffic Controller Assemblies with NTCIP Requirements (NEMA TS-2).

A. Pan Tilt Zoom Video Camera System

Furnish Sony SNC-EP520 PTZ Camera and Omnicast Pro camera connection license (Om-P-1C) for Omnicast 4.5 or an approved equal Camera and Software License. The products listed in this subsection are subject to review and approval. The equipment must meet or exceed the following specifications:

1. Camera Specifications
    a. Operate through IP communications
    b. Pan -170° to 170°
    c. Tilt -90° to +30° to +30°
    d. Electronic shutter of 18x optical zoom and 216x digital zoom
    e. 1/4 type CCD Imager (Exwave HAD Technology)
    f. Effective pixels of 768 x 494
    g. Horizontal resolution of 470 TVL
    h. Minimum illumination of 0.7 lux color and 0.06 lux black & white
    i. Focal length of 4.1mm to 73.8mm
    j. F-Number of F1.4(wide) and F3.0(tele)
    k. Auto/Manual iris (F1.4 to close)
    l. Selectable compression format of JPEG or MPEG4
    m. Minimum object distance of 300mm (wide) and 800mm (tele)
    n. Selectable image sizes of 640 x 480, 480 x 360, 384 x 288, 320 x 240, 256 x 192, 160 x 120
    o. Selectable frame rates of 18fps JPEG, 15fps MPEG at VGA, 30fps JPEG/MPEG4 at QVGA

2. Analog Video Output Specifications
    a. Signal-to-Noise ratio must be greater than 50db.
    b. Signal system must be NTSC composite

3. Interface Specifications
    a. Compact flash interface for SNCA-CFWI IEEE802.b Wireless Card or Compact flash memory.
    b. Network interface of 10Base-T100Base-X (RJ-45)
    c. Serial interface of RS232C (Transparency function or VISCA protocol)
    d. 2 I/O sensor input ports and 2 I/O sensor alarm out ports

e. Mini-jack external microphone input, 2.4V DC plug-in power, 4.7KΩ

f. A BNC analog composite video output, 1.0 Vp-p, 75Ω

g. A mini-jack (mono) audio line output, max output level of 0.9 Vrms

4. General Specifications

a. Weight of 2lbs 14 oz

b. Dimensions (W x H x D) of 5-5/8 x 8-7/8 x 5-7/8 inches

c. Power requirements of 12V DC or 24V AC

d. Power consumption of 18W maximum

e. Operating temperature between (32 °F to 104 °F)

f. Storage temperature between (-4 °F to 140 °F)

g. Storage Humidity between 20% to 95% Non-condensing

h. Required general functions are Day/Night (Auto/Manual), image flip, auto focus and motion detection

i. Compatible Protocol of IP(IPv4), ICMP, ARP, TCP/UDP, RTP/RTCP, SNMP (MIB-2), DHCP client, NTP client, DNS client, HTTP, FTP, and SMTP client

j. 10 MPEG-4 clients and 20 JPEG clients

k. Outdoor vandal resistant housing with H/B, pendant mount for SNC-RH124, RS44N, RS46N, RX-series, and RZ25N, clear lower dome

l. 8Mb compact flash (CF) type card included

m. 3 year warranty included

5. System Requirement Specifications

a. Compatible operating systems of Windows 2000/XP/Vista/7

b. Compatible web browser of Microsoft Internet Explorer® 5.5 or 6.0 or later

B. Video Detection System.

1. General.

a. System Hardware. Use machine vision system hardware consisting of the following components:

(1) Color Machine Vision Processor (MVP) sensors as shown in the Plans

(2) Terra Access Point (TAP)

(3) Communication interface panel

(4) Personal computer (PC)

The PC shall host the server and client applications that are used to program and monitor the other system components. The MVP sensor shall be an integrated color zoom camera and processor that perform real-time traffic detection. Each MVP sensor shall be programmable with a minimum of twenty detection zones to satisfy the traffic detection needs of a variety of simple to complex traffic applications. The detection zones shall be user-defined though interactive graphics software running on a PC. The detection zones and the associated traffic functions and alarms shall be downloaded to the MVP for operation. The real-time performance shall be observed by viewing the video output from the sensor with overlaid flashing detector's to indicate the current detection state (on/off). Subsequent redefinition of detection zones shall be permitted for rapid reconfiguration of fine-tuning detection performance. The MVP sensor shall calculate detector states in real-time and communicate the detection information to the TAP that subsequently translates the detection state directly to a traffic signal controller in real time. The MVP sensor shall optionally store cumulative traffic statistics, internally in non-volatile memory, for later retrieval and analysis.

The MVP shall communicate to the Terra access Point, communications panel and the software applications using the industry standard TCP/IP network protocol. The MVP shall have a built in Internet Protocol (IP) address and shall be addressable with no plug in devices or converters required.

The Terra Access Point shall communicate directly with up to eight (8) MVP sensors and shall comply with the form factor and electrical characteristics to plug directly into a NEMA Type C or D detector rack providing up to thirty-two (32) inputs and sixty-four (64) outputs directly with a TS2 Type traffic signal controller.

The communication interface panel shall be hardwired into a traffic signal cabinet or junction box. The communication interface panel shall be a Eight-sensor model and provide the electrical termination of wiring for video, data, and power for the MVP.

The communication interface panel shall provide high-energy transient protection to electrically protect the Terra Access Point and connected MVP sensors.

b. System Software. The MVP sensor embedded software suite shall incorporate multiple applications that perform a variety of diagnostic processing. Its primary function is to detect vehicular traffic approaching or departing the MVP sensor in multiple traffic lanes. The detection shall be reliable, consistent, and perform under all weather, lighting, and traffic congestion levels.

There shall be a suite of client applications that reside on the host client/server PC. The applications shall execute under Microsoft Windows 98, 2000, Windows NT, and XP. Available client applications shall include:

(1) Network Browser: Learn a network of connected Terra Access Pints and MVP's then show the topology in a logical hierarchical relationship

(2) Detector Editor: Create and modify detector configurations to be executed on the MVP sensor

(3) Operation Log: Extract the MVP run-time operation log of special events that have occurred.

(4) Data Archive: Extract time interval cumulative traffic statistics in real time (on the same time interval spacing) or after long periods of data accumulation (for instance, once a day or once a week, etc.)

(5) Software Installer: Reconfigure one or more MVP sensors with a newer release of embedded system software.

2. Functional Capabilities

a. MVP Image Sensor. The MVP image sensor shall be an integrated imaging color CCD array with optics, high-speed image processing hardware and a general purpose CPU bundled into a sealed enclosure. The MVP Sensor shall be equipped with a sunshield to reflect solar heat and to shield the CCD array from direct exposure to the sun. The CCD array shall be directly controlled by the general purpose CPU, thus providing high video quality for detection that has virtually no noise to degrade detection performance. The optics and camera electronics shall be directly controlled for optimal illumination for traffic detection. The lens shall be pre-focused at the factory, as required for operation. It shall be possible for the user to zoom the lens, as required for operation. The MVP sensor shall operate at a maximum rate of 30 frames per second when configured for the NTSC (US) video

standard. The MVP shall process a minimum of twenty detector zones simultaneously placed anywhere in the field of view of the sensor. The video output shall have the ability to selectively show overlaid graphics indicating the current real-time detection state of each individual detector defined in the video. The sensor output NTSC video shall be viewed with any compatible video-display device.

b. Differential Video. The MVP sensor shall output full motion color video through the means of a differential video port in NTSC format. The differential video is transmitted over a single twisted pair.

c. Power. The MVP sensor shall operate on 24 VAC, 50/60Hz at a maximum of 25 watts. The camera and the processor electronics shall consume a maximum of 10 watts and the remaining 15 watts shall support an enclosure heater.

d. MVP Operations Log. The MVP shall maintain a non-volatile operations log, which minimally contains:

(1) Revision numbers for the current MVP sensor hardware and software components in operation.

(2) Title and comments for the specific detector configuration file downloaded to the MVP.

(3) Date and time the Operations Log was last cleared.

(4) Date and time communications were opened or closed with the MVP.

(5) Date and time of last power-up.

(6) Time stamped MVP self diagnosed hardware and software error to aid in system maintenance and troubleshooting.

e. MVP Vehicle Detection. The real time detection performance of the MVP shall be optimized by following the set of guidelines for:

(1) The traffic application to perform,

(2) MVP sensor mounting location,

(3) The number of traffic lanes to monitor,

(4) The sizing, placement, and orientation of Count and Presence detectors,

(5) Traffic approaching and/or receding from the sensor's field of view,

(6) Minimizing the effects of lane changing maneuvers.

f. Detection Zone Placement. The video detection system shall provide flexible detection zone placement anywhere and at any orientation within the field of view of the MVP sensor. Preferred detector configurations shall be:

(1) Detection zones placed across lanes of traffic for optimal count accuracy or

(2) Detection zones placed parallel to lanes of traffic for optimal presence detection accuracy of moving or stopped vehicles.

A single detection zone shall be able to replace one or more conventional detector loops connected in series. Detection zones shall be able to be overlapped for optimal road coverage. In addition, selective groups of detectors can be logically combined into a single output by using optional delay and extend timing and signal state information. Optimal detection shall be achieved when the MVP sensor placement provides an unobstructed view of each traffic lane where vehicle detection is required. Examples of obstructions are not limited to fixed objects. Obstruction of the view can also occur when vehicles from a lane nearer to the sensor obscure the view of the roadway of a lane farther away from the sensor.

g. Detection Zone Programming. Placement of detection zones shall be by means of a supervisor computer (PC) operating in the Windows 98, 2000 or Windows NT graphical environments, a keyboard, and a mouse. The monitor shall be able to show the detection zones superimposed on images of traffic scenes.

The detection zones shall be created by using a mouse to draw detection zones on the supervisor computer's monitor. Using a mouse and the keyboard it shall be possible to place, size, and orient detection zones to provide optimal road coverage for vehicle detection. It shall be possible to download detector configurations from the supervisor computer to the MVP, to retrieve the detector configuration that is currently running in the MVP, and to back up detector configurations by saving them to the supervisor computer's removable or fixed disks.

The supervisor computer's mouse and keyboard shall be used to edit previously defined detector configurations to permit adjustment of the detection zone size and placement, to add detectors for additional traffic applications, or to reprogram the sensor for different traffic applications or changes in installation site geometry or traffic rerouting.

h. Detection Zone Operation. The MVP real time detection operation shall be verifiable through several means. The primary method

shall be to view the video output of the sensor with any standard video display device (monitor). The video with overlaid detection zones shall display each detector as white, when the state of the detector is ON, or as black, when the state of the detector is OFF. Each detector shall be selectively assignable to be visible or hidden in the detector flashing video display when the detector configuration file is programmed.

Additional verification of detector operation includes visual observation of the LED's on the front of the TAP and/or confirmation of detection as recognized by the traffic controller.

l. Optimal Detection. The video detection system shall optimally detect vehicle passage and presence when the MVP sensor is mounted 30 ft. or higher above the roadway, when the image sensor is adjacent to the desired coverage area, and when the distance to the farthest detection zone locations are not greater than ten (10) times the mounting heights of the MVP. The recommended deployment geometry for optimal detection also requires that there be an unobstructed view of each traveled lane where detection is required. Although optimal detection may be obtained when the MVP is mounted directly above the traveled lanes, the MVP shall not be required to be directly over the roadway. The MVP shall be able to view either approaching or receding traffic or both in the same field of view. The preferred image sensor orientation shall be to view approaching traffic since there are high contrast features on vehicles as viewed from the front rather than the rear. The MVP sensor placed at a mounting height that minimizes vehicles image occlusion shall be able to monitor a maximum of six (6) to eight (8) traffic lanes simultaneously.

j. Terra Access Point Detector Port Master. The Terra Access Point card shall provide the hardware and software means for up to eight (8) MVP sensors to communicate real time detection states and alarms to a local traffic signal controller. It shall comply with the electrical and protocol specifications of the detector rack standards. The card shall have 1500 Vrms isolation between rack logic ground and street wiring.

The Terra Access Point card shall be a simple interface card that plugs directly into a NEMA TS2 Type C or D detector rack. The TAP TS2 card shall provide 32 phase inputs and 64 detector outputs.

k. MVP Input and Output Assignments. Input and Output assignments are programmed into the MVP through the local "Supervisor" port

on the detector rack interface card. The MVP declares which input and output pins are utilized during operation, the card requires no software configuration or setup. Detector outputs shall be assigned to any detector type that changes on/off state and consecutive pairs of outputs shall emulate the output of two (closely spaced) detectors to report speed of individual vehicles.

l. Jumper Configurable TS1 I/O. Two jumpers shall permit the card to be configured so that all inputs and outputs go either to the rear edge connector or the front panel DB 15 connector.

m. Terra Interface Panel. The Terra communications interface panel supports one to Eight MVPs. The communications interface panel consists of a predefined wire termination block for MVP power, data, and video connections, a power transformer for the MVP, electrical surge protectors to isolate the TAP and MVP, and an interface connector to cable directly to the TAP.

n. MVP Sensor Power. The interface panel shall provide power for one (1) MVP through a step-down transformer, taking local line voltage and producing 28 VAC, 50/60 Hz, at about 30 watts. A 1/2 amp slow-blow fuse shall individually protect the step-down transformers.

o. High Energy Transient Suppression. The interface panel shall provide termination points for all street wiring of the MVP and high-energy transient protection. The interface panel shall provide high energy crowbar transient protection, to NEMA TS2 standards. The transient suppression shall protect all of the interconnected hardware.

p. Interface Panel I/O Terminations. The Terra interface panel terminal block includes terminations for one (1) to eight (8) MVPs. This shall include terminations for:

3 termination points for Power, Communications and Video to and from the MVP sensor

q. Supervisor Software Suite. The system software shall support either small or large networks of field hardware of MVP sensors, TAPs, and commercial telecommunications equipment. The communication of traffic data, alarms, video snapshots, etc. across the network shall use the client server relationship model. The central communications server, the ComServer, provides local or remote access to all networked field hardware to a variety of client applications that can execute simultaneously on the same host computer as the ComServer or across a local area network. Local access shall provide direct hook-up/link to field hardware (for field

installation and maintenance) even though the field hardware may be communicating to remote client applications. Remote access shall provide connection to specific field hardware over long distances as part of a larger interconnected network. The Supervisor Software Suite shall consist of the ComServer and all of the supplied client applications.

The Supervisor Software Suite shall provide an easy to use graphical user interface and support all models/versions of the supplied MVP and Mini–Hub. The software shall support both still image and real-time viewing of video images within in Windows. Programming the MVPs and designating inputs and outputs from/to the TAPs shall be performed with detectors overlaid on still images and monitoring the detection performance of the MVPs shall be displayed with "live" video.

The Supervisor Software Suite consists of the:

(1) ComServer, to provide the network communications services of deployed field hardware to client applications

(2) Network Browser, to activate selected client applications with associated field hardware in the network

(3) Detector Editor, to create and modify detector configurations to be executed on the MVPs and TAPs in the field

(4) Operation Log, to extract the MVP run-time operation log of special vents that have occurred

(5) Data Archive, to extract time interval cumulative traffic statistics in real time (on the same time interval spacing) or after long periods of data accumulation (for instance, once a day or once a week, etc.) and stored locally to the Supervisor PC

(6) Installer, to reconfigure one or more MVPs with a newer release of embedded system software.

r. Supervisor Computer System. A supervisor computer system is not required.

3. MVP Hardware

a. MVP Image Sensor. The MVP video detection system shall use medium resolution, color image sensor as the video source for real-time vehicle detection.

As a minimum, each image sensor shall provide the following capabilities:

(1) Images shall be produced with a color CCD sensing element with horizontal resolution of at least 500 lines and vertical resolution of at least 350 lines.

(2) Images shall be output as a video signal conforming to NTSC specifications.

(3) Provide software JPEG video compression.

(4) Useable video and resolvable features in the video image shall be produced when those features have luminance levels as high 10,000 lux during the day.

(5) Useable video and resolvable features in the video image shall be produced when the ratio of the luminance of the resolved features in any single video frame is 300:1.

(6) Provide direct real-time iris and shutter speed control.

(7) Be usable for video surveillance.

(8) An optical filter and appropriate electronic circuitry shall be included in the image sensor to suppress "blooming" effects at night.

(9) Gamma for the image sensor shall be preset at the factory to a value of 1.0.

b. MVP Optics. The MVP image sensor shall be equipped with an integrated zoom lens that can be changed using either configuration computer software or a hand-held controller.

c. MVP Enclosure. The image sensor and lens assembly shall be housed in an environmental enclosure that provides the following capabilities:

(1) The enclosure shall be waterproof and dust-tight to NEMA-4 specifications, and shall have the option to be pressurized with dry nitrogen to 5 ± 1 psi.

(2) The enclosure shall allow the MVP image sensor to operate satisfactorily over an ambient temperature range from –29° F to 140° F while exposed to precipitation as well as direct sunlight.

(3) The enclosure shall allow the image sensor horizon to be rotated during field installation.

(4) The enclosure shall include a provision at the rear of the enclosure for connection of the factory-fabricated power, communications, and video signal cable. Input power to the environmental enclosure shall be 110 VAC and either 50 or 60 Hz as an option.

(5) A heater shall be at the front of the enclosure to prevent the formation of ice and condensation in cold weather, as well as to assure proper operation of the lens' iris mechanism. The heater shall not interfere with the operation of the image sensor electronics, and it shall not cause interference with the video signal.

(6) The enclosure shall be light-colored and shall include a sun shield to minimize solar heating and glare.

(7) The front edge of the sunshield shall protrude beyond the front edge of the environmental enclosure and shall include provision to divert water flow to the sides of the sunshield.

(8) The amount of overhang of the sunshield shall be adjustable to prevent direct sunlight from entering the lens or hitting the faceplate.

(9) The total weight of the image sensor in the environmental enclosure with sunshield shall be less than 6 pounds.

(10) When operating in the environmental enclosure with the power, communication and video signal cable connected, the image sensor shall meet FCC class B and CE requirement for electromagnetic interference emissions.

d. MVP Electrical. Connections for video, communications and power shall be made to the image sensor using a single connector (Easy Lock). The Contractor shall supply the 3 conductor (1175-006) 18 AWG Carolprene flexible cable, which will run from the back of the camera to the signal controller cabinet.

e. MVP Field Interface Equipment. An MVP communication interface panel shall be available for installation inside the traffic cabinet. The panel shall provide twisted-pair connection points with approved transient protection. Transient protection shall be included for each MVP image sensor. Additionally, the communication interface panel shall provide 110 VAC for each sensor using transformers that step down the voltage from the existing 110 or higher AC power available in the cabinet. The interface panel 3-wire input power shall be connected to the transient protected side of the AC power distribution system in the traffic control cabinet in which the panel is installed.

4. System Installation. The supplier of the video detection system shall supervise the installation and testing of the video detection system and computer equipment. A factory certified representative from the supplier shall be on-site during installation. Install all video detection equipment in accordance with the manufacturer's recommendations.

5. System Training. Provide a four-hour session of training by a certified instructor to State personnel in the operation, setup and maintenance of the video detection system. Provide instruction and materials for a maximum of 10 persons and conduct the training at a location determined by the Engineer.

6. Warranty, Service, and Support. The supplier, for a minimum of two (2) years, shall warrant the video detection system. Ongoing software support by the supplier shall include software updates of the MVP sensor, Terra Access Point and supervisor computer applications. These updates shall be provided free of charge during the warranty period. The supplier shall maintain a program for technical support and software updates following expiration of the warranty period. This program shall be available to the State in the form of a separate Contract.

Article 17.5 Controller Cabinet

Contractor shall provide a controller cabinet that meets the requirements of NEMA Standard TS 2-2003 V02.06 Traffic Controller Assemblies with NTCIP Requirements (NEMA TS-2), Section 5 Terminals and Facilities and Section 7 Cabinets. Cabinet enclosure shall be UL listed.

A. Standard Features. Supply the following standard features:

1. Materials

   Unless otherwise designated in the Plans, provide cabinets constructed of sheet Aluminum. Back and sides of cabinet shell shall be of one continuous piece of Aluminum.

2. Cabinet Dimensions

   Unless otherwise designated in the Plans, provide a size 6 cabinet as defined in NEMA TS-2 Table 7-1.

3. Doors

   a. The cabinet shall be equipped with a universal lock bracket capable of accepting a Best CX series lock. The cabinet shall come equipped with a Best blue construction core lock. Provide two keys for lock.(2)

   b. Provide a Police Compartment meeting the requirements of NEMA TS-2 Section 7.5.7. Provide two keys for lock. The Police Compartment shall house the following switches:

      (1) "flash/automatic" switches that when placed in the "flash" position causes the intersection displays to go into the flashing mode. When placed in the "automatic" position, the signal system must resume normal operation.
      (2) "signals on/off" switch that when placed in the "off" position removes power from the signal bus. Do not allow power on

the bus when either "automatic" or "flash" operation is selected by any means.

c. Permanently label switches in the Police Compartment.

d. The door shall be mounted with a single continuous stainless steel piano hinge that runs the length of the door. Attaching tamper resistant bolts shall also be stainless steel.

e. Provide Generator Bypass Compartment

(1) The cabinet front door shall have a locking generator bypass compartment that shall be used to connect a generator to operate the cabinet during extended loss of service line power. The generator compartment shall be capable of being closed and locked while a generator is connected. The mechanism for allowing generator cable access, while the compartment is closed, shall be an integral part of the generator bypass door, via a sliding panel that will normally be in the closed position. Inside the compartment there shall be a silkscreened panel housing a Hubbell HBL2615 30A / 125V flanged inlet receptacle capable of accepting a standard generator plug, a BACO HC52DQG cam switch with split AC+ feeds, and (2) LED lamps with sockets. One LED shall be illuminated when the cabinet has service line power and the other when the cabinet is under generator control. All LED's shall be field replaceable without putting the intersection in flash and shall carry a 5 year manufacturer warranty.

(2) All wiring to the generator bypass compartment shall be contained in a single cable bundle. The cable shall connect to the backside of the electrical components and shall only be accessible from the inside of the cabinet front door. All electrical components on the inside of the front door that carry AC voltage shall be covered by a see-through plexi-glass cover. The generator bypass cable shall terminate at the same power panel location as service line voltage.

(3) The generator bypass receptacle compartment shall come with a tapered lock using a Best CX series blue core.

(4) The welds for the generator receptacle compartment shall be done on the inside of the front door. All welds shall be free from burrs, cracks, blowholes or other irregularities.

4. Shelves

Provide shelves meeting the requirements of NEMA TS-2 Section 7.6. Cabinet shall come with (2) double beveled shelves 10" deep that are reinforced welded with V channel, fabricated from 5052-H32 0.125-inch thick aluminum with double flanged edges rolled front to back. Slotted hole shall be inserted every 7" for the purpose of tying off wire bundles.

Provide additional laptop computer shelf mounted approximately 42" above ground level. The laptop shelf must accommodate a standard 17" computer, be retractable below one of the cabinets' shelves and contain a storage drawer.

5. Finish and Preparation

The cabinet shall be powder-coated grey on the outside and white on the inside. All exterior seams shall be manufactured with a neatly formed continuously weld construction. The weld for the police box door shall be done on the inside of the cabinet door. All welds shall be free from burrs, cracks, blowholes or other irregularities.

6. Cabinet Mounting

a. Provide cabinet mounting features as defined NEMA TS-2 Section 7.8.
b. The cabinet manufacturer is responsible for providing a cabinet that will mount without modification on the foundation detailed in Municipality of Anchorage Standard Specifications, Sections 80-5, 80-6, and 80-7.
c. The cabinet shall come with lifting ears affixed to the upper exterior of the cabinet. These ears shall utilize only one bolt for easy reorientation.

7. Cabinet Ventilation

Furnish a cabinet that fully meets the requirements of NEMA TS-2 Section 7.9 and the following:

a. Furnish the fan and cabinet vent with internally mounted metal covers that are fabricated to close off the flow of air during winter operation.
b. Equip the cabinet with a selectable, 600/900/1500 watt cabinet heating device with a 2 speed fan. The heating device must have a remote air sensing thermostat. The contacts must be rated 20 amps, 120 volts, 60 hertz. Heating device shall be mounted on inside of the cabinet door, below the control panel. Heating device shall be a Caframo model 9206CA-BBX or approved equivalent.
    (1) Construct the thermostat so that contacts close on descending temperature and are adjustable between -30 and 110 °F ±5 °F. The contacts must open on rising temperatures of 15 °F above the closing temperature. The adjustment must have an indicating pointer. Remote bulb type thermostat shall not be used. Thermostat shall be a Johnson Controls model A19BBC-2C or approved equivalent.
    (2) Connect the thermostat in series with an electrical resistance heater and blower fan. The blower fan must be rated for continuous duty. The heater and fan must be connected in

parallel and rated 120 volts, 60 Hertz. Mount the unit on the cabinet door below the auxiliary panel.

(3) Do not block the air intake or outlet. Provide the unit with a SPST manual override switch that bypasses the thermostat to enable the fan and heater to operate at warmer temperatures.

8. Auxiliary Cabinet Equipment

a. Light fixture. The cabinet light fixture shall be an incandescent type porcelain lamp holder rated for 660W-250V AC/CA. The lamp shall be 100W. The lighting fixture “ON-OFF” switch must be a toggle switch mounted on the on the inside control panel. Include in the circuit a door actuated switch that turns the light ON when the door is open and OFF when the door is closed.

b. Provide a re-sealable print pouch. The pouch shall be mounted to the door of the cabinet. The pouch shall be of sufficient size to accommodate one complete set of cabinet prints.

c. Provide three (3) paper sets of complete and accurate cabinet drawings with each cabinet. Make cabinet drawings available electronically in AutoCAD v2006 or later format and deliver with paper set.

d. Provide one paper set of manuals for the controller, Malfunction Management Unit, GTT Opticom Phase Selector and vehicle detector amplifiers with each cabinet. Make said manuals available in electronic Adobe "pdf" format and deliver with paper set.

9. Cabinet Wiring

Neatly arrange the wiring within controller cabinets to conform to the requirements of Section 80-10, 80-11 and 80-13. Furnish controller cabinets wired to accommodate:

a. Configuration #4 in Table 5-2 of the NEMA Standards Publications No. TS 2-2003 V02.06, Traffic Controller Assemblies with NTCIP requirements with four each Type 2 detector racks.

(1) Equip the cabinet with required control and auxiliary equipment connecting cables to operate the phases and detection indicated on the Plans, including future use with a minimum of 16 load switch positions, 8 flash transfer relay position and 1 flasher socket.

(2) Size wiring, switches, surge protectors, flash relays, and flashers to handle the necessary amperage required under full cabinet use. Use orange colored wires to run from the flash transfer relay used for emergency flash programming.

(3) Wire the cabinet to accommodate 6 unique preemption sequences as defined by NEMA TS-2 Section 3.7 and 2 auxiliary preempt sequences. Configure two detector racks to accommodate 4 unique sequences.

(4) Wire the cabinet with a GTT Company's Opticom Priority Control Model 768 Auxiliary Interface Panel and a Model 757 Auxiliary Harness to accommodate the full quantity of emergency preemption inputs and green sense operations available with GTT Company's Opticom Priority Control System 764 series phase selector.

Install Opticom panels in close proximity to one another.

(5) Wire the cabinet so that the control panel's momentary contact test switches for vehicle calls Phase 1-8 are wired to Detector rack Channels 1-8 respectively.

(6) Wire the cabinet so that each inductive loop detector channel input termination has three adjacent screw terminal positions provide, so that two loops can be series terminated for each individual detector channel.

(7) Wire the cabinet so that there is a single field terminal wired to each of the cabinet's flasher outputs circuits #1 and #2.

(8) Wire the cabinet so that channel 1-16 green field outputs are jumpered to a terminal block. Also, route the GTT Opticom phase selector green sense wires to the same terminal block.

(9) Wire cabinet so that there are terminal block locations (test points) for all T&F BIU's #1 & #2 wiring circuits.

(10) Provide a load resistor panel with 8 resistors for usage to "load" future circuits for Flashing Yellow Arrow (FYA) operation.

(11) Wire all preemption outputs from the detector racks to a terminal block. Wire BIU wires for preemption inputs to adjacent positions on same terminal block. Intended for wiring programming of alternative assignment (Preempt 2-5 or Preempt 3-6). For emergency vehicle preemption.

(12) Wire the cabinet so that confirmation lights are activated via controllers Preempt Active Outputs, not phase selector confirmation light outputs.

Wire the cabinet so that preemption confirmation light circuits utilize the yellow outputs of LS9 – LS12.

Wire all BIU preemption outputs wires to a terminal block. Wire conductors for LS9 – LS12 yellow inputs to a terminal block intended for wiring programming of alternative confirmation light assignments.

(13) Terminate the MMU wires associated with channel # 9–12 yellow outputs on a terminal block, for future use. Install conductors from channel # 9–12 yellow field terminals to position adjacent to relocated MMU wires.

(14) All wires terminated behind the main panel or on the back side of other panels shall be SOLDERED. No pressure or solder-less connectors shall be used.

(15) All cabinets shall be wired to flash for all channels. Flashing operation shall alternate between channels 1,3,5,7,13,14,15,16

and 2,4,6,8,9,10,11,12. Flash programming shall be either red or yellow simply by changing wires on the front of the load-bay.

10. Field Terminal Blocks

Provide Terminals and Facilities meeting the requirements of NEMA TS-2 Section 5, Configuration #4 (Table 5-2) and the following:

a. Provide 2 or more insulated terminal blocks to terminate field conductors. Provide each block with 12 poles with 10-32 screw type terminals. Use a terminal block that is a barrier type with removable shorting bars in each of the 12 positions and with integral type marking strips. Terminate conductors to a terminal block. The load-bay shall have two rows of field terminals tied together in series. Each channel shall have 6 terminals, two complete rows each consisting of 3 terminations from left to right beginning with phase 1 corresponding to the appropriate vehicle phase Green, Yellow and Red and following the order of the load switches. Connections shall be soldered on the back sides of the terminal blocks. Field terminals shall be #10 screw terminal and be rated for 600V.

b. Terminate conductors from the controller unit and MMU unit in ring type terminal lugs or solder them to a through panel solder lug on the rear side of the terminal. Terminate other conductors in spade type terminal lugs.

c. Do not bring more than 3 conductors to any one terminal. Two flat metal jumpers, straight or U shaped, may also be placed under a terminal screw. Fully engage at least 2 full threads of terminal screws when the screw is tightened. Do not extend live parts beyond the barrier.

d. A TII Porta Systems Model No. 1512 building entrance protector 12-pair unit shall be installed for telemetry cable pair terminations.

e. On the right side of controller cabinets, install two 16 position bus bars, for terminating the equipment grounding and neutral conductors used inside the cabinets. On the left side of the controller cabinets, install two 32 position bus bars, for terminating the equipment grounding and neutral conductors from field wiring. Offset upper 16 position bus bar past the lower 16 position bus bar where 32 positions are required.

11. Cabinet Accessories

See NEMA Standard TS 2-2003 V02.06, Section 5 Terminals and Facilities, Figure 5-4 Cabinet Power Distribution Schematic for Items “a.” through “f.”

a. Disconnecting Means

(1) Main circuit breaker must be a single pole, 40 ampere, 10,000 amperes interrupting capacity for each cabinet.

(2) Provide a minimum of 2 Auxiliary circuit breakers, each must be single pole, 20 ampere, 10,000 amperes interrupting capacity to protect fan, heater, light, and convenience outlet(s). One auxiliary circuit breaker shall only service a single outlet receptacle for exclusive use for the cabinet heater. The rating of the main disconnect means with overcurrent protection must be not less than 125% of the maximum anticipated continuous load. When using disconnecting circuit breakers, use "trip indicating trip free," Type.

b. Signal Bus. Connect the signal bus to the incoming AC line through a signal bus solid state relay and an overcurrent protection device. Energize the signal bus solid state relay to provide power to the signal bus. The current rating of the signal bus solid state relay must be at least the current rating of the main overcurrent protection device. Solid state relay shall have an LED input status indicator.

c. AC Service Transient Suppression. Connect the transient suppression device for the primary feed of the cabinet on the load side of the cabinet overcurrent protection device. The transient voltage suppression device connected to the controller power circuit must provide protection against voltage abnormalities of 1 cycle or less duration.

(1) The suppressor must be solid state high energy circuit containing no spark gap, gas tube, or crow bar component. The current rating of the device must be 15 amps minimum. The device must provide transient protection between neutral and ground, line and ground, as well as line and neutral. If the protection circuits fail, they must fail to an open circuit condition. The device must meet requirements of UL Standard 1449.

(2) The suppressed voltage rating must be 600 volts or less when subject to an impulse of 6,000 volt, 3,000 amp source impedance, 8.0/20 microsecond waveform as described in UL Standard 1449. In addition, the device must withstand, without failure or permanent damage, one full cycle at 264 volts RMS.

(3) The device must contain circuitry to prevent self induced regenerative ringing. There must be a failure warning indicator light that must illuminate when the device has failed and is no longer operable. The transient suppression device must withstand a 20,000 ampere surge current with an 8x20 microsecond (time to crest x time to second halfcrest) waveform 20 times at 3 minute intervals between surges without damage or degradation to the suppressor. Output

voltage must not exceed 500 volts at any time during the test. Use a device that is a solid state, high energy circuit with no spark gap, gas tube, or bar component.

d. Radio Interference Suppression. Equip each traffic cabinet, flasher, and other current interrupting device with a suitable radio interference suppressor installed at the input power point. Install the radio interference suppressor after the AC service transient suppression unit described in Article 17.5 A 11.c. It must provide a minimum attenuation of 50 decibels over a frequency range from 200 kilohertz to 75 megahertz, when used with normal installations.

(1) The interference suppressor must be hermetically sealed in a substantial metal case filled with suitable insulating compound. Terminals must be nickel-plated, 10-24 brass studs of sufficient external length to provide space for connecting two No. 8 conductors and must be so mounted that the terminals cannot be turned in the case. Ungrounded terminals must be properly insulated from each other and must maintain a surface leakage distance of not less than 1/4 inch between any exposed current conductor and any other metallic part, with an insulation factor of 100 to 200 megohms dependent on external circuit conditions.

(2) The radio interference suppressor must have a minimum current rating equal to the rating of the main disconnect means as specified in Article 17.5 A 11.a (1). It must be designed for operation on 120 volts, 60 hertz, single phase circuits and be UL and EIA compliant.

(3) Connect the ground connection of the radio interference suppressor only to AC neutral. Do not connect to Earth Ground directly.

e. Communications Transient Suppression. Provide eight (8) hybrid (solid state/gas tube) 5-pin protector modules. Modules shall have gold pins and a black case. The module shall be a Bourns part No. 303-M-09GIGO or approved equal.

f. Control Panel. Provide and label a control panel assembly that is readily accessible from the front of the cabinet. The control panel assembly must consist of:

(1) "controller power" switch to energize the controller while the signal lights are off or are being operated by the flasher. Label and rate the switch for load current.

(2) “cabinet light” “ON-OFF” switch.

(3) "auto/flash" switch that when placed in the "flash" position provides flashing operation without interrupting the controller

unit power. When the switch is placed in the "auto" position the controller unit must provide normal operation.

(4) "stop time/off/on" switch that when placed in the "ON" position causes the controller unit to stop time. In the "off" position, the controller unit must be active regardless of external commands. In the "AUTO" position, the timing must be normal but subject to external command interruptions.

(5) "heater by-pass" switch to bypass the remote heater thermostat.

(6) momentary contact test switches to place calls on each vehicle and pedestrian phase. Switches must provide tactile feedback and be rated at 1 ampere, minimum, for a resistive load at 120 VAC and at 28 VDC. Contacts must be coin silver or gold plated and be enclosed and labeled as to their function.

(7) Provide a hinged clear plastic cover over the control panel switches. Plastic cover shall be of a minimum thickness of 0.1”

(8) Control Panel shall be attached to door with a hinge located along bottom edge, to allow panel to be lowered for testing or replacement of switches.

g. Receptacle Outlets. The cabinet shall be wired with one duplex outlet with a ground fault interrupter, one convenience duplex outlet without ground fault interrupters and one single outlet, exclusively for the heating device without ground fault interrupter. The ground fault outlet shall be mounted on the right side of the cabinet on or near the power panel. The one convenience outlet shall be near the top shelf. The heater outlet shall be mounted on the right side of the cabinet on or near the power panel. No outlets shall be mounted on the door. The GFI power shall be fed through the auxiliary breaker. The convenience outlet power shall be fed through an EDCO SHP300-10 transient voltage suppressor located on the cabinet power panel.

h. Power panel cover. Clear plastic cover material shall be a minimum thickness of 0.1”. Cover shall be firmly attached at four points. Holes shall be slotted for easy removal and replacement.

i. Labeling on the Control Panel and Load Bay shall be silk screened on front and back sides. Labeling on Power Panel shall be silk screened.

j. The entire load bay shall roll down and provide access to all of the back of panel wiring. All solder terminals shall be accessible when the load-bay is rolled down. The assembly shall be able to roll down without requiring other components, cables or load switches to be removed The load-bay shall be balanced such that it will not roll

down when fully loaded with load switches, flashers and flash transfer relays, when retaining attachments are removed.

B. Special Features. Provide the following.

1. Coordination "Remote/Time of Day/Free" Switch. When the switch is in the switch is in the "Time of Day" position, the local controller must use the local coordinators time of day plan. When the switch is in the "Free" position, it must be possible to remove any or all coordination devices and maintain normal, non-coordinated controller operation without wire jumpers, jumper plugs or other special devices.

2. “Force-Off” Switch There shall be 2 momentary test switches tied to ring 1 and ring 2 on the controller. Switches must provide tactile feedback and be rated at 1 ampere, minimum, for a resistive load at 120 VAC and at 28 VDC. Contacts must be coin silver or gold plated and be enclosed and labeled as to their function.

Provide a clear plastic cover mounted on top of the detector racks. Clear plastic cover material shall be a minimum thickness of 0.1” Cover to extend over harness connectors and wiring on card slots.

Article 17.6 Operation

A. The cabinet shall be wired for all red flash operation.

B. The flashing circuit shall be independent on the controller unit and shall remain in operation upon shutdown of the controller or removal of the controller from the cabinet.

C. The controller cabinet shall be wired so that removal of the MMU shall cause the intersection to go into flashing operation.

D. The method by which flashing operation is accomplished shall be determined via program entry and shall be either:

1. Voltage Monitor Output inactive, or

2. Load Switch Driver Output Flashing - Load Switch Driver Output Flashing shall provide an alternating True/False logic output at 1 pulse per second repetition rate with 50 ± 2 percent duty cycle. The selection, via program entry, of Yellow Flashing, Red Flashing, or Dark for each vehicle load switch driver group (G/Y/R) shall be provided. All pedestrian load switch driver groups (W/PC/D) shall be inactive (Dark) in flash.

E. Pedestrian push buttons shall be operated at 12 VAC.

F. Controller Priorities. The drives, controls and equipment shall have priorities and each device, control or item of equipment shall override the operation of those items listed below it:

1. Power-Up
2. External Start
3. Preemption

4. Internal Advance
5. Stop Time
6. Automatic Flash
7. Manual Control Enable
8. Force Off

G. Signal Timing Priorities. Patterns and signal plans are capable of being selected on program entry, Interconnect Inputs, Time Base Control events, and a System Interface. The pattern and signal plan select priority shall be as follows:
1. Program Entry
2. System Interface
3. Time Base Control Event
4. Interconnect Inputs
When Time Base Control On-Line is active, the Time Base Control event priority will be lower than the Interconnect Inputs. Should the Sync Monitor diagnostic determine the Interconnect Offset to be invalid, a Time Base Control event may control.

Article 17.7 Shop Tests

Traffic controller cabinet, cabinet wiring diagrams, controller units, and auxiliary equipment shall be shipped to the Traffic Signal Electronics Lab at 3601 Dr Martin Luther King Jr. Avenue. The Traffic Signal Electronics personnel will inspect cabinet wiring, burn in signal cabinet equipment, customize cabinets(s) for desired operation and test in accordance with the following specifications.

The Contractor shall allow six (6) weeks to allow for shop testing. All required equipment including wiring diagrams shall arrive in one shipment. Partial shipments will not be accepted and will be returned to the vendor.

Traffic signal equipment shall meet the operational and functional requirements of the Drawings and Specifications when tested in accordance with NEMA Standards Publication Number TS2-2003 V2.06, Traffic Controller Assemblies.

If a partial failure occurs at any step in the test - physical, environmental, or operational - the manufacturer representative will be permitted to make on-the-site repairs within ten (10) days after notification of the malfunction. The test will then be restarted at beginning of category in which malfunction occurred. Failure to make repairs in ten (10) days after notification will result in rejection.

If equipment malfunctions twice in the same category, the equipment will be rejected. When equipment is rejected, the entire package, including cabinet, will be returned freight collect to the vendor. New equipment, with a different serial number, must then be submitted for testing. Rejected equipment shall not be used on signal projects within the Municipality.

Testing subsequent to rejection of the equipment for failure to comply with specification requirements will be at the expense of the Contractor. Deductions to cover the costs of such testing will be made from any monies due or which may come due the Contractor under this Contract.

A failure shall be defined as any occurrence which results in other than normal operation of the equipment. The equipment is considered to have failed if any of the following occur:

1. The controller unit malfunctions.
2. The load switch produces incorrect signal indications.
3. The MMU fails to satisfy the requirements of the Contract Specifications.
4. The detector racks or emergency preemption interface fail to operate correctly.
5. A BIU fails to operate correctly.

After satisfactory completion of the shop test, the Contractor will be notified to pick up the tested and marked equipment at the test site. The Contractor shall pick up successfully tested equipment within two (2) weeks of notification. The Contractor shall deliver said equipment to the Work site. Successful completion of the test does not relieve the Contractor of equipment warranty obligations as specified in Section 80.01, Article 1.4 – Warranties, Guarantees, and Instruction Sheets, or field testing as specified in Section 80.16, Article 16.2 – Field Tests.

Copies of the shop test results will be sent to the Contractor and associated vendor.

Article 17.8 Installation

A. Cabinet positioning shall be subject to the review and acceptance of the Traffic Signal Electronics Foreman.

B. A three eighths inch (3/8") fillet of silicone caulking shall be placed between each controller cabinet and the concrete slab foundation to prevent dust and dirt from entering the cabinet.

Article 17.9 Measurement

Traffic signal controllers will be measured as units, complete and in place, including labor, cabinet, hardware, controller unit, standard and auxiliary equipment, all as required by this Section and by the Contract Drawings Special Provisions to provide a complete and working system.

Article 17.10 Basis of Payment

Payment for this Work shall be in accordance with Division 10, Section 10.07 - Measurement and Payment, and shall include full payment for all Work described in this Section.

Payment will be made under the following units:

ITEM	UNIT
TS2-1 Controller Unit	Each

SECTION 80.18 VEHICLE DETECTORS

Article 18.1 Loop Detectors

For the purpose of this Section, the "home run" and the "home run loop wires" are defined as the pair of wires from the loop in the traveled lane to the nearest junction box. The "lead-in" or "lead-in cable" is defined as the shielded twisted pair cable from the junction box to the controller cabinet.

All connections between the loop wire and shielded lead-in cable shall be made as follows:

A. Shielded lead-in cable pairs shall not be cut except when they are to be spliced to a loop and then only at the junction box where the splice shall be made. Used and unused ends of the cut pairs should be of equal length.

B. Place tubular heat shrink insulation over the foil and drain wire on all cut ends of the shielded lead-in cable pairs to insure drain wire and conductive side of foil are insulated from all other foils and drain wires.

C. Insert the wires into the appropriate sized end of the Multilink part # ML56-16, or approved equal, splice connector. Crimp and heat the connector in accordance with manufacturer's installation instructions.

D. Secure cable/conductor bundle with nylon cable ties.

E. Seal the connection in a clear re-enterable-encapsulating splice kit as shown on the detail. All cable and conductor sheaths shall extend a minimum of one inch (1") into re-enterable encapsulating compound. A half inch (1/2") of free space, measured from the outside dimensions of the splice cables/conductors to the inside dimensions of the splice tube kit, shall be left around the circumference and at the ends of all splice cables/conductors. Free space shall be completely filled with approved re-enterable encapsulating compound so that there is no space for water to sit inside of splice kit when kit is stood up vertically.

The Contractor shall conduct a megohm meter test at five hundred (500) volts DC on all loops. The ends of the loops shall be temporarily spliced together and the resistance to ground measured. The resistance shall not be less than one hundred (100) megohm. If the resistance is less than one hundred (100) megohm, the Contractor shall be responsible for correcting the problem(s), and the test shall be repeated until passed. The test shall be performed at the time of the pre-final inspection or when the signal is put into operation, whichever comes first; however, the Contractor is encouraged to test the loops to his own satisfaction prior to inspection.

The DC resistance between two (2) ends of the same loop wire shall be measured and shall not exceed one and one-half (1.5) ohms per one hundred (100) circuit feet. Where existing lead-in cable is being used, the Contractor shall perform the above tests on the

lead-in cable prior to splicing with the loop wires. If the tests on the existing lead-in cable are not satisfactory, the Engineer may request that it be replaced at an appropriate negotiated price.

All the above tests are to be performed, and the results recorded, by the Contractor in the presence of the Engineer. The Contractor shall supply all the test equipment and deliver signed legible copies of the test reports to the Engineer.

Conduit-encased loop wires shall be No. 14 AWG stranded copper wire with PVC tube (IMSA Spec. 51-5).

Each detector loop shall be connected to its own detector lead-in pair of seven (7) pair #18 shielded conductor cable to be used for detector lead-ins. All parallel and series connections shall be made at the cabinet terminal strip.

The upstream and intermediate loop home runs shall be routed to the nearest junction box along a path perpendicular to the direction of travel. Home runs for adjacent loops less than sixteen feet (16') apart shall be routed to the nearest junction box in the same trench to the extent possible to minimize excavation of the pavement.

The stop bar loop home runs will generally be routed to the same junction box. All the home runs shall be routed parallel and adjacent to each other along a path perpendicular to the direction of travel. A path parallel to the direction of travel may be needed from the individual loop to the common perpendicular routing.

Loop locations may be staggered plus or minus six inches (±6") to accommodate home run placement.

The loop conduit shall be PVC Schedule 80, conforming to ASTM D1785, except that the "X" connection of the loop to the home run shall be a hot dip galvanized steel conduit. The Contractor shall use one inch (1") diameter conduit.

The home run conduit shall be PVC Schedule 80.

For installation of loops, loops will be placed in compacted leveling course bedding material conforming to Division 20, Section 20.22 – Leveling Course. There shall be a minimum thickness of one inch (1") of leveling course beneath the loop conduit and condulet. A minimum of one inch (1") of compacted leveling course shall be placed on top of the loop conduit and condulet prior to paving.

Sand bedding shall be non-frost-susceptible, consisting of naturally occurring fine mineral aggregates free of clays, silt, or organic matter.

In constructing conduit encased detector loops, the Contractor shall be responsible for devising his own methods of cutting and restoring the existing asphalt concrete pavement, provided that his methods:

A. Allow for the maintenance of traffic through the construction zone, and;

B. When installing loop detectors in existing pavement, cut the asphalt with a saw and remove all asphalt within the saw cut, and;

C. Replace asphalt concrete in two (2) equal lifts, with a minimum thickness of three inches (3") or the existing pavement thickness, whichever is greater, and;

D. Reconstruct the base material, including new leveling course and disposal of surplus or unusable material, if necessary, and asphalt concrete, in accordance with Division 20 - Earthwork and Division 40 - Asphalt Surfacing, and;

E. Are approved by the Engineer.

Full-lane-width asphalt patching is required. Any remaining section less than twelve feet (12') between loops must be replaced to provide a continuous patch. The Contractor shall adhere to the following guidelines:

A. Where existing pavement will not be overlaid, enclose all loops that enter a common junction box within a trapezoidal saw-cut.

B. Cut to within one foot (1') of the lane and edge lines, preserving the pavement markings.

C. Remove the asphalt to the lip of the gutter when there are no edge lines.

D. Cut across lane lines when loops in adjacent lanes are side by side.

E. Cut trenches a minimum of three feet (3') wide installing loop tails across a lane.

F. Trenches crossing a shoulder only may be a minimum of one foot (1') wide.

G. Contractor shall saw-cut asphaltic concrete pavement for loops in existing pavement.

H. All existing pavement between detection loops within twelve feet (12') of another loop shall be saw-cut and removed, then repaved continuously.

I. All traffic markings removed as a result of loop installation in existing pavement shall be replaced to the original alignment and messages.

After the asphalt concrete pavement has been removed according to the Contractor's approved method, the area where the conduit-encased detector loop is to be placed shall be cleared of all rocks and protrusions which may damage the conduit. Sand

bedding or leveling course may be required by the Engineer to attain an adequate surface. The Contractor shall take care that the subgrade is not disturbed. If the subgrade material is disturbed, the Contractor shall compact the surface to the satisfaction of the Engineer.

The conduit-encased detector loop shall then be installed and sand bedding or leveling course shall be placed over the loop to a minimum of one inch (1") compacted depth.

An asphalt tack coat per Division 40, Section 40.04 – Tack Coat, shall be applied to all edges of the existing pavement prior to placing new asphalt. Asphalt concrete pavement shall be placed and compacted in a minimum of two (2) equal lifts per Division 40 – Asphalt Surfacing.

When loops are installed in existing pavement or as new Work, traffic shall not be allowed to drive over the loops until the first layer of asphalt has been placed.

Article 18.2 Optical Detectors - Preemption

Any substitutions of cable, material or equipment in this Article must be submitted to the Municipal Traffic Engineer for testing and approval prior to installation.

Mount detectors according to manufacturer recommendations or as approved by the Engineer. Mount and aim detectors to provide maximum emergency vehicle recognition. Detector locations shown on the Drawings are approximate. Before installing the Optical Detectors, gain approval of their final lateral location on the mast arms from the Municipal Traffic Engineer or assigned designee.

Install the following components of the GTT Company's Opticom Priority Control System in accordance with manufacturer's written installation instructions at each signalized intersection listed on the Drawings:

A. Install the quantity of Model 711, 721, or 722 Optical Detectors on the traffic signal pole mast arms as shown on the Drawings. Mounting hardware shall consist of Pelco Products, Inc. "Astro Mini-Brac" Band Mount Clamp Kits, or approved equal, and GTT Company "M575 Confirmation Light Hardware" Installation Kit, or approved equal. See the Drawings for installation details.

B. Install Model 138 Optical Detector cable and a three-conductor #14 AWG signal cable between each optical detector and the controller cabinet. Furnish enough slack in these cables to extend two feet (2') beyond the end of each signal mast arm and to leave ten feet (10') of slack in the controller cabinet. Label each cable.

C. Before attaching the conductors to the optical detector, strip the insulation from the conductors in the Model 138 cable and attach all four (4) conductors to chassis ground in the controller cabinet. Attach the signal

cable to the confirmation light. The Traffic Signal Electronics Shop will make final terminations of the conductors in the controller cabinet.

D. When retrofitting existing controller cabinets, furnish each controller assembly with two (2) Model 764 phase selectors and Model 768 Auxiliary Interface Panels. Deliver these parts to the Traffic Signal Electronics Shop Foreman.

New controller cabinets shall include these parts installed by the controller assembly manufacturer per Section 80.17, Article 17.4 - Special Auxiliary Equipment.

Article 18.3 Radar Detectors

Radar detectors may not be used without prior approval of the Traffic Engineer. Any substitutions of cable, material or equipment in this Article must be submitted to the Traffic Engineer for testing and approval prior to installation.

Radar detectors shall be Microwave Sensors Model TC26B sensors that operate in the X-band radar frequency and use microprocessor analyzed Doppler-microwave detection method for detecting vehicles moving toward or away from the unit. They shall be installed in accordance with the manufacturers written installation instructions and the following requirements:

A. Install a sixty-hertz (60 hz) transformer with one hundred twenty (120) volt AC primary and twenty four (24) volt AC secondary in the controller cabinet. Follow the manufacturer's requirements for current output per detector. Furnish a UL-listed, Class 2 rated transformer with built-in overload and short circuit protection.

B. A fuse block shall be provided with four (4) fuses to protect the twenty-four (24) volt AC transformer secondary and isolation relay from damage due to faults outside of the controller cabinet assembly.

C. Home-Run Cable

Wire each sensor using a color-coded three (3) pair cable such as Alpha Wire Company cable part # 6314 or Beldon part # 9883, or approved equal.

Pair 1 shall be black paired with red and shall be used to supply power to the unit.

Pair 2 shall be black paired with white and shall be tied back at both ends.

Pair 3 shall be black paired with green and shall connect to the relay contacts in the unit. In the cabinet, this pair shall be connected to the twenty-four (24) volt AC transformer secondary and the isolation relay.

D. Isolation Relay

For each detector, a socket-mounted isolation relay shall be provided for the controller cabinet assembly. The relay shall be an RH1B-UAC24V with snap mount socket and aluminum din rail. One leg of the relay coil shall connect to the twenty-four (24) volt AC transformer secondary while the other leg shall be fused and connect to the detector unit relay.

Article 18.4 Ultrasonic Detectors - Ultrasonic Presence Sensors

Ultrasonic detectors may not be used without prior approval of the Traffic Engineer. Any substitutions of cable, material or equipment in this Article must be submitted to the Traffic Engineer for testing and approval prior to installation.

Ultrasonic detectors shall be Microwave Sensors Model TC30C. They shall be installed in accordance with the manufacturer's written installation instructions.

At the locations shown on the Drawings, install sensors that operate at an ultrasonic frequency and sample for the presence of stationary and moving vehicles at a rate of ten (10) times per second. Furnish sensor units that:

A. Feature solid-state circuitry and a high-speed transducer with the sensitivity to detect a motorcycle. The cone of coverage produced by the transducer should measure at least four feet (4') in diameter at twenty one feet (21') from the transducer. The unit shall provide a continuous call to the controller unit with the presence of a vehicle in its cone of coverage or whenever the unit loses power.

B. Include an external control to adjust the length of the cone of coverage, an external detection light emitting diode, and mounting brackets suitable to install the units on traffic signal pole mast arms.

C. Require no external amplifiers, seasonal tuning, or special cabling, and which operate at all temperatures from -31°F to 167°F (-35°C to 75°C).

D. Operate on a voltage of twelve (12) to twenty-four (24) volts AC.

E. Install a sixty-hertz (60 hz) transformer with one hundred twenty (120) volt AC primary and twenty-four (24) volt AC secondary in the controller cabinet. Follow the manufacturer requirements for current output per detector. Furnish a UL-listed, Class 2 rated, transformer with built in overload and short circuit protection.

F. A fuse block shall be provided with four (4) fuses to protect the twenty-four (24) volt AC transformer secondary and isolation relay from damage due to faults outside of the controller cabinet assembly.

G. Home-Run Cable

Wire each sensor using a color coded three (3) pair cable such as Alpha Wire Company cable part # 6314 or Beldon part # 9883, or approved equal.

Pair 1 shall be black paired with red and shall be used to supply power to the unit.

Pair 2 shall be black paired with white and shall be tied back at both ends.

Pair 3 shall be black paired with green and shall connect to the relay contacts in the unit. In the cabinet, this pair shall be connected to the twenty-four (24) volt AC transformer secondary and the isolation relay.

H. Isolation Relay

For each detector, a socket-mounted isolation relay shall be provided for the controller cabinet assembly. The relay shall be an RH1B-UAC24V with snap mount socket and aluminum din rail. One leg of the relay coil shall connect to the twenty-four (24) volt AC transformer secondary while the other leg shall be fused and connect to the detector unit relay.

Article 18.5 Video Detectors

Video Detectors shall not be used without prior approval of the Traffic Engineer.

Article 18.6 Measurement

Loop detectors will be measured as units, complete and in place, including all labor, equipment, specified materials and miscellaneous materials to provide a complete and functioning unit, including the home run to the nearest junction box. Bid item "Install Loop Detectors in Existing Pavement" includes, but is not limited to, all costs of cutting and restoring existing pavement; excavation; disposal of surplus or unusable material; and placement of leveling course.

Optical preemption detectors, radar detectors and ultrasonic detectors shall be measured as units, complete and in place, including all labor, equipment, specified materials and miscellaneous materials to provide a complete and functioning unit, including all wiring to the controller cabinet assembly and all hardware installed in the cabinet.

Article 18.7 Basis of Payment

Payment for this Work shall be in accordance with Division 10, Section 10.07, Measurement and Payment, and shall include full payment for all Work described in this Section.

Payment will be made under the following units:

ITEM	UNIT
Install Loop Detector - New Work	Each
Install Loop Detector - Existing Pavement	Each
Install Optical Preemption Detector (Type)	Each
Install Radar Detector	Each
Install Ultrasonic Detector	Each
Install Video Detectors	Each

SECTION 80.19 VEHICLE SIGNAL HEADS

Article 19.1 General

LED Signal Heads shall conform to the following publications:

A. Circular Indications: Vehicle Traffic Control Signal Heads: Light Emitting Diode (LED) Circular Signal Supplement, 6/27/05 (ITE Publication ST-052). This is hereafter referred to as "VTCSH-05".

B. Arrow Indications: Vehicle Traffic Control Signal Heads – Light Emitting Diode (LED) Vehicle Arrow Traffic Signal Supplement 7/1/07 (ITE Publication ST-054), 4/3/06. This is hereafter referred to as "VTCSH-Arrow-07."

Each signal head shall be adjustable, vertical type with the number and type of sections as specified herein and shown on the Drawings; shall provide an indication in one direction only; shall be adjustable through 360 degrees about a vertical axis; and shall be mounted at the location and in the manner shown on the plans.

Vehicle Signal Heads shall have Light Emitting Diode (LED) lamps for all red, green and yellow indications. Red, green and yellow lamps shall conform to Article 19.4 – Light Emitting Diode (LED) Optical Units.

Each lens shall be provided with a removable tunnel visor, with an open slot at the bottom. The visor shall be constructed of aluminum. The color shall be Econolite green and black.

Vehicle signal housings shall conform to the following:

1. All parts of the housing, including the doors and end plates, shall be of die cast aluminum conforming to the specifications of ASTM B85, and all parts shall be clean, smooth, and free from flaws, cracks, blow holes, or other imperfections, unless otherwise called for on the plans.

2. The housing of each signal section shall be one piece with integral top, bottom, and sides, with square doors.

3. All exposed bolts, screws, hinges pins, and door locking devices shall be stainless steel. All interior screws and fittings shall be stainless steel or approved non-ferrous, corrosion-resistant material.

4. The top and bottom of each housing shall have an opening to accommodate standard one and one-half inch (1-1/2”) pipe fittings and brackets.

5. The top and bottom opening of the housing shall have an integral serrated boss that will provide positive positioning of the signal head in five (5)

degree increments to eliminate undesirable rotation or misalignment of the signal head as well as between sections. A total of seventy-two (72) teeth shall be provided in the serrated boss. The teeth shall be clean and sharp to provide positive positioning with the grooves of the mating section or framework.

6. Individual signal sections shall be fastened together with a cadmium-plated tri-stud connector, lock washers, and nuts with access holes for the passage of electrical conductors from one section to another.

7. Each signal housing shall have two (2) integral hinge lugs located on the left side for mounting the door.

8. One (1) or two (2) latches shall be provided on the right side of each signal housing with stainless steel wing nut assemblies for the purpose of engaging the door latches.

9. Each signal housing shall have a door opening for the periphery which shall have a soft, closed-cell neoprene gasket to provide a weather-tight seal with the mating door.

10. The door of each signal housing shall be provided with a round opening designed to accommodate any standard traffic signal lens.

Article 19.2 Installation

A. Vehicle signal heads shall not be installed at any intersection until all other signal equipment, including the controller, is in place and ready for operation at that intersection, unless the faces are not directed toward traffic or unless the faces are adequately covered. Contractor shall cover heads with beige colored canvas shirts sized to fit the signal faces shown in the Drawings. Each shirt shall feature elasticized openings that fit over the visors and at least two straps to secure it to the signal. Provide shirts with a legend that reads “out of service” and a center section that allows an operator to see the indications during system tests.

B. Signal heads, backplates, visors, mounting brackets and fittings shall be painted as specified in Section 80.16, Article 16.4 - Painting for Steel Structures.

C. Vehicle signal head mounting hardware shall be attached to the side of pole that faces away from traffic unless otherwise approved by the Engineer.

D. All conductor access holes drilled for side mounted vehicular signal heads shall be deburred inside and out to prevent scraping of the conductors. The holes shall be cleaned and painted with two (2) coats of zinc chromate primer for metal.

E. Through phase vehicle signal faces shall be aimed at a point located a distance from the face as shown in the following table. If two (2) through signal faces are

not visible from this point at an eye height of three and one-half feet (3.5') above finished grade, then the Traffic Engineer shall be consulted for corrective measures.

Signal Head Visibility Distances

Posted Speed Limit (mph)	Minimum Visibility Distance (ft.)
20	328
25	394
30	460
35	540
40	390
45	624
50	722
55	820
60	902

F. Backplates shall be attached to the signal head using plated steel rivets with large flange button heads. The rivet shall be two-tenths inches (0.2") in diameter and 0.575 inches long and at least 2380 N and 3000 N shear and tensile strength, respectively. Bore out the mounting holes in the backplates and signal heads to the diameter recommended by the rivet manufacturer.

G. Each lens shall be provided with a removable tunnel visor, with an open slot at the bottom, constructed of aluminum and securely installed using machine screws. The threads of the machine screws shall be coated with an antiseizing compound before installation.

H. Removal and relocation of existing signal heads, as shown on the Drawings, shall utilize new mounting hardware.

I. When installing LED signal heads, the Contractor shall clearly and permanently mark the date installed on the back of each unit.

Article 19.3 Signal Head Mounting

Mast arm mounted signal head locations shown on the Drawings are approximate. Signal heads shall be installed over lane lines or over the center of lanes, as shown on the Drawings. Mounting locations shall be verified using the as-built lane markings and signal pole foundation location. Obtain the approval of the Engineer before wire access holes are drilled in mast arms.

A. Mast Arm Signals

Signal head assembly for suspension from mast arm shall be equipped with a bronze plumbizer.

All holes in mast arms shall be field drilled to ensure proper location of signal heads with respect to traffic lanes. Arms shall be drilled for wire accesses after installation on the base of the pole. The wire hole locations shall be directly centered on the mounting bracket on the signal head side of the mast arm.

All mast arm mounted signal heads shall be mounted using "Astro-Brac" band mount clamp kits part number AB-3007-L **(with stainless upgrade option)**, brackets manufactured by Pelco Products Inc., or an approved substitute. The mounting nipple shall be a two inch (2") rigid metal conduit, cut to a length of six inches (6"). The mounting nipple shall have one inch (1") of tapered thread on one end, be drilled to accept the plumbizer through bolt and all openings shall be deburred.

B. Pole and Post Mounted Signals

Bracket mounted signal heads, as shown on the Drawings, shall be supported by mounting brackets consisting of watertight assemblies of one and one-half inch (1 1/2") standard steel pipe and malleable iron or brass pipe fittings. All members shall be either plumb or level, symmetrically arranged, and securely assembled. Construction shall be such that all conductors are concealed within the assembly.

The horizontal nipples shall be of adequate length to achieve the required offsets indicated on Standard Details 80-27 and 80-29. Offsets are calculated from center of signal head mounting opening to center of vertical riser on terminal compartments. Side mounted frames twenty-two inches (22"), double head post top mount eleven inches (11"), and single head post top mount six inches (6").

Where four- (4-) or five- (5-) section vertical signal heads are side mounted on poles, a steel conduit hanger shall be installed on the vertical framework pipe, six inches (6") down from the upper horizontal framework pipe. A conduit hanger shall be mounted to the pole with a five-sixteenth inch (5/16") bolt and lock washer.

Pole side mounted traffic signal heads shall be mounted on the back side of pole unless noted or detailed otherwise on the Drawings. The pole/post-mounted traffic

signal heads shall be mounted so that no portion of the backplates are hidden by the pole/post.

At each signal location, unless otherwise shown on the Drawings, a terminal compartment shall be constructed into the mounting brackets.

For post-top mounting of bracket mounted signals, the terminal compartment shall be cast with an integral slip-fitter.

For post-top mounting of a one-way signal head, a slip-fitter without a terminal compartment may be used.

Post-top signal heads with backplates shall be mounted with an offset slip-fitter to allow the signal head backplate to clear the signal pole.

Attach each side mounted terminal compartment with two one-half by thirteen inch (1/2" x 13") bolts with washers, threaded into holes tapped into the side of the pole.

C. Programmed Visibility Traffic Signal Heads

The Contractor shall program the head as recommended by the manufacturer and as directed.

When programmed, each signal face's indication shall be visible only in those areas or lanes to be controlled, except that during dusk and darkness a faint glow to each side will be permissible.

Article 19.4 Light Emitting Diode (LED) Optical Units

All LED vehicle lamps shall be GELcore, Dialight or an approved equal. Any substitutions must be submitted to the Traffic Engineer for testing and approval prior to bid award. LED vehicle lamps shall meet the following specifications:

A. Definition

1. Eight inch (8") and twelve inch (12") indications for all vehicle traffic signals faces shall utilize light emitting diode signal modules.
2. Light emitting diode (LED) signal modules shall consist of an assembly that utilizes light emitting diodes as the light source in lieu of an incandescent lamp for use in traffic signal sections.

B. General

1. LED signal modules shall be designed to be installed in the doorframe of a standard traffic signal housing. The lamp socket, reflector, reflector holder and lens used with an incandescent lamp shall not be used in a signal section in which an LED signal module is installed.
2. LED signal modules shall be a sealed unit with two (2) conductors for connecting to power, a printed circuit board, power supply, a lens and

gasket, and shall be weather proof after installation and connection. The circuit board and power supply shall be contained inside the module.

3. Conductors for modules shall be forty inches (40") in length, with insulated quick disconnect terminals.

4. The lens of the module shall be integral to the unit, shall be convex with a smooth outer surface and made of ultraviolet stabilized plastic or of glass. The lens shall be capable of withstanding ultraviolet (direct sunlight) exposure for a minimum period of five (5) years without exhibiting evidence of deterioration.

5. The module shall be sealed in the door frame with a one-piece EPDM (ethylene propylene rubber) gasket.

6. The LEDs shall utilize AlInGaP technology and shall be the ultra bright type rated for 100,000 hours of continuous operation from -40°F to 165°F (-40°C to 74°C). AlGaS LEDs will not be allowed.

7. The failure of an individual LED in a string shall only result in the loss of that LED, not the entire string or indication.

8. Furnish LED signal modules rated for a minimum useful life of sixty (60) months and that meet current ITE Standards for LED signal modules.

C. Physical and Mechanical Requirements

1. LED traffic signal modules shall be designed as retrofit replacements for existing optical units of signal lamps and shall not require special tools for installation. LED signal modules shall fit into existing traffic signal section housings built to the VTCSH standard without modification to the housing.

2. Installation of an LED signal module shall only require the removal of the optical unit components, i.e., lens, lamp module, gaskets, and reflector; shall be weather tight and fit securely in the housing; and shall connect directly to electrical wiring.

LED Signal Module Lens. The LED signal module shall be capable of replacing the optical unit. The lens may be tinted or may use transparent film or materials with similar characteristics to enhance ON/OFF contrasts. The use of tinting or other materials to enhance ON/OFF contrasts shall not affect chromaticity and shall be uniform across the face of the lens.

Use only clear lenses for all green signal modules.

If a polymeric lens is used, a surface coating or chemical surface treatment shall be used to provide front surface abrasion resistance.

Environmental Requirements. The LED signal module shall be rated for use in the operating temperature range of -40°F to 165°F (-40°C to 74°C).

The LED signal module shall be protected against dust and moisture intrusion per the requirements of NEMA Standard 250-1991 for Type 4 enclosures to protect all internal components.

The LED signal module lens shall be UV stabilized.

Construction. The LED signal module shall be a single, self-contained device, not requiring on-site assembly for installation into an existing traffic signal housing. The power supply for the LED signal module shall be integral to the unit.

Module Identification. Each LED signal module shall have the manufacturer's name, trademark, and other necessary identification permanently marked on the back of the module. Each individual LED signal module shall be identified for warranty purposes.

The following operating characteristics shall be identified: rated voltage, power consumption, and volt-ampere.

Each LED signal module shall have prominent and permanent vertical marking(s) for correct indexing and orientation within signal housing. The markings shall consist of an up arrow, or the word "UP" or "TOP."

D. Photometric Requirements

1. LED traffic signal modules shall meet at least eighty-five percent (85%) of the minimum VTCSH intensity requirements while operating throughout the operating temperature range of -40°F to 165°F (-40°C to 74°C).

2. The minimum initial luminous intensity values for LED traffic signal modules shall be as defined in Section 11.04 of the VTCSH standard at 77°F (25°C).

3. The measured chromaticity coordinates of LED signal modules shall conform to the chromaticity requirements of Section 8.04 and Figure 1 of the VTCSH standard.

E. Electrical

1. LED signal modules shall operate from a sixty-hertz (60 Hz) ±3 Hz AC line over a voltage ranging from eighty (80) volts to one hundred thirty-five (135) volts. The LED circuitry shall prevent perceptible flicker over the voltage range specified above. The fluctuations of line voltage shall have no visible effect on the luminous intensity of the indications.

Rated voltage for all measurements shall be one hundred twenty (120) volts. The LED traffic signal lamp unit shall not be capable of functioning at less than forty-five (45) volts.

2. All wiring and terminal blocks shall meet the requirements of Section 13.02 of the VTCSH standard. Two (2) secured, color-coded, 1 m long 600 V, 20 AWG minimum, jacketed wires, conforming to the National Electric Code, rated for service at 221°F (+105°C), are to be provided for electrical connection for each LED signal module.

3. The signal module on-board circuitry shall include voltage surge protection to withstand high-repetition noise transients as stated in Section 2.1.6 of NEMA Standard TS-2, 1992.

4. LED signal modules shall be operationally compatible with currently used controller assemblies (solid state load switches, flashers, and conflict monitors).

5. LED signal modules and associated on-board circuitry must meet Federal Communications Commission (FCC) Title 47, Subpart B, Section 15 regulations concerning the emission of electronic noise.

6. The LED signal module shall provide a power factor of nine-tenths (0.90) or greater.

7. Total harmonic distortion (current and voltage) induced into an AC power line by a LED signal module shall not exceed twenty percent (20%).

F. Production Testing Requirements

1. Each new LED traffic signal lamp unit shall be energized for a minimum of twenty-four (24) hours at operating voltage and at a temperature of 140°F (60°C) in order to cause any electronic infant mortality to occur, and to ensure electronic component reliability prior to shipment.

2. After the burn-in procedure is completed, each LED traffic signal lamp unit shall be tested by the manufacturer for rated initial intensity at rated operating voltage.

G. Warranty

The manufacturer shall provide a written warranty against defects in materials and workmanship for the LED signal modules for a period of sixty (60) months after installation of the modules. Replacement modules shall be provided promptly after receipt of modules that have failed at no cost to the Owner except cost of shipping of the failed modules. Provide the Engineer with all warranty documentation prior to installation. Deliver the replacement modules to Traffic Signal Electronics Shop

within five (5) working days of notification. The warranty does not include the costs associated with removing and reinstalling units that are replaced or repaired.

Article 19.5 Incandescent Optical Units

A. Each optical unit shall consist of a lens, a reflector, a lamp holder, and a clear incandescent traffic signal lamp.

B. Lenses shall be circular in shape and glass construction.

C. The lamp holder shall be secured to the reflector to provide a dust and moisture proof seal.

D. The reflector and lamp holder shall be held securely in place with the outer edge of the reflector engaging the lens gasket to provide a light and moisture seal for the entire optical assembly.

E. All lamp holders shall be so wired that a white wire will be connected to the shell of the lamp holder and a black or colored wire to the bottom or end terminal of the lamp holder. These wires shall, in turn, be connected to the terminal block mounted inside at the back of the housing. The terminal block shall have sufficient screw type terminals to terminate all field wires and lamp wires independently, with separate screws. The terminals to which field wires are attached shall be permanently identified or wiring shall be color-coded to facilitate fieldwork. The terminal block shall be located in the center section of the head.

F. Lamps for the twelve inch (12”) units shall be 1,950 lumen minimum initial output, 120 volt, 6,000 hour rated life, clear, traffic signal lamps, unless specified otherwise in the Drawings.

G. Lamps for the eight inch (8”) units shall be 665 lumen minimum initial output, 120 volt, 6,000 hour rated life, clear, traffic signal lamps.

H. Reflectors shall be made of Alzak finished aluminum, the thickness of the anodic coating to be a minimum of 0.0001 inches, or its equivalent, spun or drawn from metal not less than 0.025 inches thick equipped with a bead or flange on the outer edge to stiffen the reflector and insure its being held true to shape. The reflecting surface shall be totally free of flaws, scratches, defacements or mechanical distortion.

Article 19.6 Backplates

Backplates shall be furnished and attached to all vehicle signal heads, including programmed-visibility signal heads, except for post-mounted flashers which will be installed without backplates.

Backplates shall be aluminum and the color shall be Econolite green and black. Backplate extensions (borders) shall be five inches (5”) wide. Where a backplate consists of two (2) or more sections, they shall be fastened together with aluminum rivets or boltsand peened after assembly to prevent loosening.

Construct backplates of 0.063-inch minimum thickness aluminum alloy sheet meeting ASTM B 209, alloy 3003-H14.

Backplates shall be painted as specified in Section 80.16, Article 16.4 – Painting for Steel Structures.

Article 19.7 Signal Head Mounting Hardware

A signal head assembly for suspension from mast arm shall be equipped with a bronze plumbizer.

All mast arm mounted signal heads shall be mounted using "Astro-Brac" band mount clamp kits part number AB-3007-L **(with stainless upgrade option)** brackets manufactured by Pelco Products, Inc., or an approved substitute. The mounting nipple shall be a two inch (2”) rigid metal conduit, cut to a length of six inches (6”). The mounting nipple shall have one inch (1”) of tapered thread on one end, be drilled to accept the plumizer through bolt, and all openings shall be deburred.

A. Pipe and Fittings

Bracket mounting hardware shall be one and one-half inch (1 1/2") standard steel pipe and malleable iron or brass pipefittings. Construction shall be such that all conductors are concealed within a watertight assembly.

Signal heads shall be equipped with positive brass lock rings and fittings designed to prevent heads from turning due to external forces. Lock ring and connecting fittings shall have serrated contacts.

B. Terminal Compartment

Terminal compartments shall be bronze of sufficient strength to remain intact in event the pole is knocked down.

For post-top mounting of bracket mounted signals, the terminal compartment shall be cast with an integral slip-fitter. Each terminal compartment shall be fitted with a terminal block containing twelve (12) poles, each with two (2) screw type terminals. Each terminal shall accommodate at least three (3) No. 14 AWG conductors. A raintight cover shall be provided, giving ready access to the terminal block.

C. Slip-fitters

Slip-fitter shall fit over a four inch (4”) standard pipe or four and one-half inch (4 1/2") outside diameter end of tapered standard. Each slip-fitter shall be provided

with two (2) rows of steel set screws, with three (3) screws in each row to secure the assembly in plumb position. Set screws shall be cadmium plated.

Slip-fitters, where used without integral terminal compartment, shall be of cast-iron.

Post-top signal heads with backplates shall be mounted with an offset slipfitter to allow the signal head backplate to clear the signal pole.

D. Painting

Mounting brackets and fittings shall be painted as specified in Section 80.16, Article 16.4 – Painting for Steel Structures.

Article 19.8 Programmed Visibility Traffic Signal Heads

Each programmed visibility signal face and the installation thereof shall conform to the provisions of Article 19.1 - General; Article 19.2 - Installation; Article 19.3 - Signal Head Mounting; and Article 19.7 - Signal Head Mounting Hardware, except as modified in this subsection.

Each programmed visibility signal section shall provide a nominal twelve inch (12”) diameter circular or arrow indication. Color and arrow configuration shall conform to the latest I.T.E. Specification.

Each section shall be provided with a sun visor.

Each signal section shall be provided with an adjustable connection that permits incremental tilting from zero (0) to ten (10) degrees above or below the horizontal while maintaining a common vertical axis through couplers and mounting axis in five (5) degree increments.

The signal shall be mountable with ordinary tools and capable of being serviced without tools. Adjustment shall be preset at four (4) degrees below the horizontal, unless otherwise specified.

The visibility of each programmed visibility signal face shall be capable of adjustment or programming within the face. When programmed, each signal face’s indication shall be visible only in those areas or lanes to be controlled, except that during dusk and darkness a faint glow to each side will be permissible.

Prior to programming, each signal section with a yellow indication shall provide a minimum luminous intensity of three thousand (3,000) candela on the optical axis, and a maximum intensity of thirty (30) candela at fifteen (15) degrees horizontal from the axis. Each such signal section shall be capable of having its visibility programmed to achieve the following luminous intensities: a minimum of 3,000 candela on the optical axis, a maximum of one hundred (100) candela at from one-half (1/2) to two (2) degrees horizontal from the axis and a maximum of ten (10) candela at from two (2) to

fifteen (15) degrees horizontal from the axis. Under the same conditions, the intensities of the red indication and the green indication shall be at least nineteen percent (19%) and thirty-eight percent (38%) respectively of the yellow indication.

Each signal face or each signal section shall include integral means for regulating its luminous intensity between limits in proportion to the individual background luminance. Lamp intensity shall not be less than ninety-seven percent (97%) of uncontrolled intensity at 1000 foot-candles, and shall reduce to 15±two percent of maximum intensity at less than one foot-candle. The dimming device shall operate over an applied voltage range of ninety-five (95) to one hundred thirty (130) volts, sixty hertz (60 Hz) and a temperature range of -40°C to 74°C.

The Contractor shall supply the material required for programming of the head. The programming of the head shall be accomplished by the Traffic Signal Electronics Shop.

Article 19.9 Measurement

New and relocated signal heads will be measured as units, complete and in place, including all labor, mounting hardware, equipment and materials to provide a complete and functioning unit. Measurement shall be for the actual number of existing signal heads removed and relocated, and the actual number of new signal heads having the specified number of indicators of the specified size. Left arrow, right arrow, and round ball faces of the same size will be considered identical pay items.

Article 19.10 Basis of Payment

Payment for this work shall be in accordance with Division 10, Section 10.07 - Measurement and Payment, and shall be full payment for all Work described in this Section.

Payment will be made under the following units:

ITEM	UNIT
(8 or 12) inch (3, 4, 5) Face Signal Head	Each
Remove and Relocate Existing Signal Head	Each

SECTION 80.20 PEDESTRIAN SIGNALS

Article 20.1 General

Pedestrian signals shall be the Light Emitting Diode (LED) Type.

Pedestrian signals shall show the following:

1. Steady "WALKING PERSON" during the pedestrian interval.

2. Flashing "HAND" and countdown time “XX” in seconds during the pedestrian clearance interval.

3. Steady "HAND" after the pedestrian clearance and during the associated phases yellow and all red vehicle clearance intervals.

4. Dark during intersection flash.

Pedestrian signal mounts shall be two-piece hinge connected type (clamshell) unless otherwise shown on the Drawings.

Conductors shall be #14 AWG or larger conforming to IMSA Specification 20-1.

Article 20.2 Installation

Pedestrian signal heads shall be directed at the center of the crosswalk on the opposite side of the street.

Pedestrian signal heads shall not be installed at any intersection until all other signal equipment, including the controller, is in place and ready for operation at that intersection, unless the faces are not directed toward traffic or unless the faces are adequately covered. Contractor shall cover heads with beige colored canvas shirts sized to fit the signal faces shown in the Drawings. Each shirt shall feature elasticized openings that fit over the visors and at least two straps to secure it to the signal. Provide shirts with a legend that reads “out of service” and a center section that allows an operator to see the indications during system tests.

Pedestrian signal head mounting hardware shall be attached to the side of pole that faces away from traffic unless otherwise approved by the Traffic Engineer.

All conductor access holes drilled for side mounted pedestrian heads shall be deburred inside and out to prevent scraping of the conductors. The holes shall be cleaned and painted with two (2) coats of zinc chromate primer for metal.

Removal and relocation of existing signal heads, as shown on the Drawings, shall utilize new mounting hardware.

When installing LED signal heads, the Contractor shall clearly and permanently mark the date installed on the back of each unit.

Article 20.3 Mounting

Side mounted pedestrian signal hardware shall consist of a two-piece, hinge connected, cast aluminum bracket that mounts directly between the pole and the side of the signal head housing. Clearance between the head and pole shall not exceed three inches (3”). The bracket shall properly fit any round pole four inches (4”) or greater in diameter and be capable of being rotated a minimum of thirty (30) degrees when mounted on a four inch (4”) pole. A raintight, three (3) position terminal block shall be contained within the mounting bracket.

Bracket mounted signal heads, as shown on the Drawings, shall be supported by mounting brackets consisting of watertight assemblies of one and one-half inch (1 1/2") standard steel pipe and malleable iron or brass pipefittings. All members shall be either plumb or level, symmetrically arranged, and securely assembled. Construction shall be such that all conductors are concealed within the assembly. A terminal compartment shall be constructed into the mounting bracket.

At each signal location, unless otherwise shown on the Drawings, a terminal compartment shall be constructed into the mounting brackets.

Terminal compartments shall be bronze of sufficient strength to remain intact if the pole is knocked down.

Mounting brackets and fittings shall be painted as specified in Section 80.16, Article 16.4 – Painting for Steel Structures.

Attach each clamshell bracket with two one-half by thirteen inch (1/2” x 13”) bolts threaded into holes tapped into the side of the pole. Install a spacer, furnished by the bracket manufacturer, on each bolt.

Article 20.4 Housing

A. The case shall be a one-piece, corrosion-resistant, aluminum-alloy die-casting complete with integrally cast top, bottom, sides and back. Four (4) integrally cast hinge lug pairs, two (2) at the top and two (2) at the bottom of each case, shall be provided for operation of a swing-down door.

B. The case for pedestrian signals shall be dustproof, weatherproof, corrosion resistant, and shall provide for easy access to, and replacement of, all components.

C. Three (3) versions of the case shall be available. The first version shall be supplied with clamshell mounting hardware installed (ordered concurrently) for installation of "pole left of message." The second version shall be the "pole right of message." The third version shall contain upper and lower openings as described below suitable for either post top or bracket mounting. The first and

second versions need not include upper and lower openings, but when provided shall be plugged to be weathertight.

D. The third version shall accommodate standard one and one-half inch (1 1/2") pipe brackets, top and bottom. The bottom opening of the signal case shall have a shurlock boss integrally cast into the case. The dimensions of the shurlock boss shall be as follows:

Outside Diameter	2.625 inches
Inside Diameter	1.969 inches
Number of Radial Teeth	72
Depth of Teeth	5/64 inch

The teeth shall be clean and sharp and provide full engagement to eliminate rotation or misalignment of the signal.

E. The door frame shall be a one-piece, corrosion-resistant, aluminum-alloy die-casting, complete with two (2) hinge lugs cast at the bottom and two (2) latch lots cast at the top of each door. The door shall be attached to the case by means of two (2) Type 304 stainless steel spring pins. Two (2) stainless steel hinged bolts with captive stainless steel wingnuts and washers shall be attached to the case with the use of stainless steel spring pins. Hence, latching or unlatching of the door shall require no tools.

F. "Z-crate" or "Egg-crate" type filters shall not be used.

G. All machine screws, studs and washers shall be stainless steel.

H. Gaskets shall conform to the provisions in ASTM D-1056, Grade RE 42.

I. The outside of the housing shall be painted in accordance with the provisions of Section 80.16, Article 16.4 – Painting for Steel Structures.

J. The housings shall accept a sixteen inch by eighteen inch (16" x 18") pedestrian module.

Article 20.5 Light Emitting Diode (LED) Pedestrian Signal Modules

A. General

LED traffic signal modules shall meet the current ITE standards.

B. Installation

1. LED pedestrian signal modules shall be designed as retrofit replacements for the existing pedestrian signals (ICC 4090 and/or 4094).

2. LED pedestrian signal modules shall not require special tools for installation.

3. LED pedestrian signal modules shall fit into the existing traffic housings built to the PTCSI standard without any modification to the housing.

4. LED pedestrian signal modules shall be weathertight, fit securely in the housing and shall connect directly to existing electrical wiring.

5. Installation of a replacement LED module into the existing pedestrian housing shall only require removal of the existing optical unit components, i.e., lens, lamp, gaskets, and reflector.

6. Each retrofit shall include all necessary components to complete conversion, including a one-piece gasket.

7. Each pedestrian module shall have a sticker attached stating compliance to the ITE standard for color.

C. LED Signal Lens

1. The lens of the LED pedestrian signal modules shall be field replaceable.

2. The lens of the LED pedestrian signal modules shall be polycarbonate UV stabilized and a minimum of six millimeters (6 mm) thick.

3. The exterior of the lens of the LED pedestrian signal module shall be smooth and frosted to prevent sun phantom.

D. LED Pedestrian Signal Module Construction

1. The LED pedestrian signal module shall be a single, self-contained device, not requiring on-site assembly for installation in the existing traffic signal housing.

2. All Portland Orange LEDs shall be “AlInGaP” technology or equal, and rated for 100,000 hours or more at +165°F (+25°C) and twenty milliamps (20 mA). “AlInGaS” technology is not acceptable.

3. Each individual LED traffic module shall be identified for warranty purposes with the manufacturer’s trade name, serial number and operating characteristics, i.e., rated voltage, power consumption, and volt-ampere.

E. Environmental Requirements

1. The LED pedestrian signal modules shall be rated for use in the ambient operating temperature range of -40°F to +140°F (-40°C to +60°C).

2. The LED pedestrian signal modules, when properly installed with gasket, shall be protected against dust and moisture intrusion per requirements of MIL-STD-810F Procedure 1, Rain and Blowing Rain.

F. Luminous Intensity

1. Pedestrian LED signal modules shall be designed so, that when operated over the specified ambient temperature and voltage range, the signal shall attract the attention of, and be readable to, a viewer (both day and night) at all distances from ten feet (10') to the full width of the area to be crossed.

2. The luminous intensity of the LED pedestrian signal module shall not vary more than ±10% for voltage range of 80 VAC to 135 VAC.

G. Chromacity

The measured chromaticity coordinates of the LED signal modules shall conform to the chromaticity requirements of Section 5.3 and Figure C of PTCSI standard.

H. Electrical

1. The secured, color-coded, one meter (1 m) long, 600V, 20 AWG minimum, jacketed wires, conforming to the National Electrical Code, rated for service at +221°F (+105°C), twelve millimeter (12 mm) stripped and tinned are to be provided for electrical connection.

2. The LED pedestrian signal module shall operate from a 60 ±3Hz AC line over a voltage range of 80 VAC to 135 VAC. Rated voltage for all measurements shall be 120 ±3 volts rms.

3. The LED circuitry shall prevent perceptible flicker over the voltage range specified above.

4. The LED pedestrian signal module circuitry shall include voltage surge protection against high-repetition noise transients as stated in Section 2.1.6, NEMA Standard TS-2, 1992.

5. Catastrophic failure of one LED light source shall not result in the loss of more than the light from that one LED.

6. The LED pedestrian module shall be operationally compatible with the currently used controller assemblies. The LED pedestrian module shall be operationally compatible with conflict monitors.

7. The LED pedestrian module including its circuitry must meet Federal Communications Commission (FCC) Title 47, Subpart B, Section 15 regulations concerning the emission of noise.

8. The LED pedestrian module shall provide a power factor of 0.90 or greater over the operating voltage range and temperature range specified above for modules with six (6) watts or more.

9. Total harmonic distortion (current and voltage) induced into an AC power line by an LED pedestrian module shall not exceed twenty percent (20%) over the operating voltage range and temperature range specified above.

I. Production Testing Requirements

1. Each new LED traffic signal lamp unit shall be energized for a minimum of twenty-four (24) hours at operating voltage and at a temperature of 60°C in order to cause any electronic infant mortality to occur, and to ensure electronic component reliability prior to shipment.

2. After the burn-in procedure is completed, each LED traffic signal lamp unit shall be tested by the manufacturer for rated initial intensity at rated operating voltage.

J. Warranty

The manufacturer shall provide a written warranty against defects in materials and workmanship for the LED signal modules for a period of sixty (60) months after installation of the modules. Replacement modules shall be provided promptly after receipt of modules that have failed, at no cost to the Owner except cost of shipping the failed modules. All warranty documentation shall be given to the Engineer prior to installation. The replacement modules shall be delivered to the Traffic Signal Electronics Shop, within five (5) working days after notification. The warranty does not include the costs associated with removing and reinstalling units that are replaced or repaired.

Article 20.6 Measurement

New and relocated pedestrian signal heads will be measured as units, complete and in place, including all labor, mounting hardware, equipment, and materials to provide a complete and functioning unit. Measurement shall be for the actual number of existing pedestrian signal heads removed and relocated, and the actual number of new signal heads installed.

Article 20.7 Basis of Payment

Payment for this Work shall be in accordance with Division 10, Section 10.07 - Measurement and Payment, and shall include full payment for all Work described in this Section.

Payment will be made under the following units:

ITEM	UNIT
Pedestrian Signal Head	Each
Remove and Relocate Pedestrian Signal Head	Each

SECTION 80.21 PEDESTRIAN PUSHBUTTONS

Article 21.1 General

Where shown on the Drawings, pedestrian push buttons of substantial tamper-proof construction shall be furnished and installed or relocated. Pedestrian pushbuttons shall be ADA-compliant and either DCC-4EVR 120 (rectangle), or Bulldog RBDLM2-B-4H. Substitutions must be approved by the Traffic Engineer or designated representative.

The assembly shall be weatherproof and so constructed that it will be impossible to receive an electrical shock under any weather conditions.

Where a pedestrian pushbutton is attached to a pole, the housing shall be shaped to fit the curvature of the pole and secured to provide a rigid installation. Saddles shall be provided to make a neat fit when required.

Pushbutton and sign shall be positioned on the sidewalk or pathway side of the pole. Arrows on signs shall point in the same direction as the corresponding crosswalk. Pushbutton and sign shall not contain indicator lights unless specified on the Drawings.

Pedestrian pushbutton signs shall be as detailed in the Manual on Uniform Traffic Control Devices (MUTCD) and the Alaska Sign Design Specifications (ASDS). The R10-3E (9”X15”) pushbutton sign shall be installed above each pushbutton with the arrow pointing in the direction of the appropriate cross walk. When channel is used for mounting pushbutton signs the top and bottom sign bolt shall be tapped into the pole. Signs shall be in accordance with Division 70, Section 70.11 – Standard Signs.

Article 21.2 Measurement

New and relocated pedestrian pushbuttons will be measured as units, complete and in place, including all labor, equipment, signs, and other material to provide a complete and working unit. Measurement shall be for the actual number of existing pushbutton assemblies removed and relocated, and the actual number of new pushbutton assemblies installed. Pedestrian pushbutton signs shall not be measured separately, and shall be considered part of the pushbutton assembly.

Article 21.3 Basis of Payment

Payment for this Work shall be in accordance with Division 10, Section 10.07 - Measurement and Payment, and shall include full payment for all Work described in this Section.

Payment will be made under the following units:

ITEM	UNIT
Pedestrian Pushbutton Assembly	Each
Remove and Relocate Pedestrian Pushbutton Assembly	Each

SECTION 80.22 FLASHING BEACONS

Article 22.1 General

A. Beacons

1. Intersection Control and Hazard Beacons

   Each beacon shall consist of one or more single section traffic signal heads, in accordance with the provisions in Section 80.19 - Signal Heads, with yellow or red LED modules as shown on the Drawings.

2. Warning Sign Beacons

   Each Warning Sign Beacons shall consist of twelve inch (12”) diameter yellow LED signal indications. The number of units, unit configuration and unit installation shall be as shown on the Drawings.

3. Speed Limit Sign Beacons

   The ‘SCHOOL SPEED LIMIT 20 WHEN FLASHING’ (S5-1) sign beacon assembly shall consist of four (4) signal heads with eight inch (8”) or twelve inch (12”) diameter yellow LED signal indications as shown on the Drawings. They shall be mounted horizontally directly above the S5-1 sign. The two upper beacons shall be illuminated alternately and face oncoming traffic. The lower beacons shall face the opposite direction and be illuminated alternately also.

4. Mast Arm Mounted Sign Beacons

   Each mast arm mounted sign beacon assembly shall consist of four (4) twelve inch (12”) diameter yellow LED signal indications with backplates, and two signs of the type and size indicated on the plans. All signs and signals shall be mounted on the mast arm, with two (2) signals and one (1) sign facing each direction. Any two (2) signals facing the same directions shall be illuminated alternately. Signal heads shall meet the requirements of Section 80.19 - Signal Heads.

B. Control Unit

1. Flashing Beacon Control Unit

   The Flashing Beacon Control Unit is to be used for the following: Intersection Control Beacons, Hazard Beacons and Crosswalk Warning Sign Beacons. Each control unit shall be a complete flasher cabinet assembly consisting of an On/Off switch, 15-ampere circuit breaker, surge protector, terminal blocks, flasher socket and NEMA flasher. The enclosure shall be a NEMA Type 3R, and shall be provided with a right side hinged door with locking mechanism.

2. Speed Limit Sign Beacon Control Unit

Each control unit shall be a complete flasher cabinet assembly consisting of a 20-ampere circuit breaker, solid state surge protector, Radio Interference Suppresser, MOV (Metal Oxide Varistor) surge protector, thermostatically controlled incandescent cabinet light with door activated bypass switch, terminal blocks, flasher socket, NEMA flasher and digital time clock. The enclosure shall be a NEMA Type 3R, and shall be vented and provided with a right side hinged door with locking mechanism.

3. Speed Limit Sign Beacon With Push Button Actuated Warning Beacon Control Unit

Each control unit shall be a complete cabinet assembly consisting of a 20-ampere ciruit breaker, solid state surge protector, radio interference suppressor, MOV (Metal Oxide Varasitor) surge protector, thermostatically controlled incadencent cabinet light with door activated bypass switch, terminal blocks, flasher socket, NEMA flasher, digital time clock, analog timer and isolation relay. The enclosure shall be a NEMA Type 3R, and shall be vented and provided with a right side hinged door with locking mechanism.

4. Push Button Actuated Warning Beacon Control Unit.

Each control unit shall be a complete cabinet assembly consisting of a 20-ampere circuit breaker, solid state surge protector, Radio Interference Suppresser, MOV (Metal Oxide Varistor) surge protector, thermostatically controlled incandescent cabinet light with door activated bypass switch, terminal block, flasher socket, NEMA flasher, analog timer and isolation relay. The enclosure shall be a NEMA Type 3R, and shall be vented and provided with a right side hinged door with locking mechanism.

C. Control Unit Component Specification

Control unit shall be wired in accordance with the latest cabinet wiring diagram available from the Traffic Signal Electronics Foreman.

Terminal blocks shall be in accordance with Section 80.17 - Controller Assemblies, except that a single three- (3-) position Box Lug type terminal block capable of accepting three (3) No. 6 AWG wires for terminating power cables must be supplied in all control units.

Switches shall be 15 ampere, single-pole, 120 volt AC.

The Metal Oxide Varistor (MOV), surge protector shall be a V130PA20A.

The cabinet light fixture shall be an incandescent type porcelain lamp holder rated for 660W-250V AC/CA. The lamp shall be 75W.

Flasher socket shall be Cinch-Jones socket S-406-SB, or equivalent.

Flasher shall be a NEMA 2 circuit, solid state, rated at 15 amperes per circuit flasher.

Digital time clock shall be an RTC AP41, or equivalent as approved by the Traffic Signal Electronics Foreman. Clock to be supplied with Speed Limit Sign Beacon Control Unit and Speed Limit Sign Beacon With Push Button Actuated Warning Beacon Control Unit.

Control unit, complete with all cabinet components, shall be delivered to Traffic Signal Electronics Shop for testing, prior to installation in the field.

Isolation Relay shall be IDEC power relay model RR2P-U (AC120)

Timer shall be IDEC analog timer RTE-P2 AF20

All other components shall meet the requirements of Section 80.17 - Controller Assemblies.

Article 22.2 Measurement

Flashing beacons, flashing beacon control units, and flashing beacon control units with push button actuated control will be measured separately as units, complete and in place, including all labor, equipment, and material to provide a complete and working unit.

Article 22.3 Basis of Payment

Payment for this Work shall be in accordance with Division 10, Section 10.07 - Measurement and Payment, and shall include full payment for all Work described in this Section.

Payment shall be made under the following units:

ITEM	UNIT
Intersection Control Beacon	Each
Hazard Beacon	Each
Warning Sign Beacons	Each
Speed Limit Sign Beacon	Each
Mast Arm Mounted Sign Beacon	Each
Flashing Beacon Control Unit	Each
Speed Limit Sign Beacon Control Unit	Each
Push Button Actuated Warning Beacon Control Unit	Each
Speed Limit Sign Beacon with Push Button Actuated Warning Beacon Control Unit	Each

SECTION 80.23 LUMINAIRES

Article 23.1 General

Luminaires shall be of the type shown on the Drawings.

Article 23.2 Light Distribution

Furnish luminaires having standard I.E.S. light distribution patterns as specified in the Contract Documents.

Prior to installation, Contractor shall check the socket position in the luminaire to verify that it corresponds to the setting indicated in the instructions for the light distribution type shown on the Drawings.

Vertical light distribution shall be short (s), medium (m), or long (l).

Cutoff shall be cutoff (c), semi-cutoff (s), or non-cutoff (n).

Lateral light distribution shall be Type 1, Type 1-4 way, Type II, Type II-4 way, Type III or Type IV.

When cutoff fixtures are specified in the Special Provisions or shown on the Drawings, the optical assembly shall provide ninety-degree (90°) cutoff and shielding. The reflector shall be specifically designed to produce the specified ANSI and IES light distribution when used with one hundred fifty (150) through four hundred (400) watt high pressure sodium lamps. The fixture shall have a flat plate glass lens and no part of the lens shall project below the luminaire's metal housing.

Mast arm mounted luminaires shall be provided with slip-fitters designed for mounting on two-inch (2”) standard pipe.

Contractor shall ensure all lenses are of the refractor type, and that the refractors are made of polycarbonate resin.

Contractor shall ensure the polycarbonate resin lenses are molded in a single piece. Contractor shall not use reworked compound whose properties have been impaired by previous molding operations. Contractor shall provide lenses free from cracks, blisters, burns and flow lines, furnished with the natural molded surface, uniform density throughout, free from air, gas, or moisture pockets, and uncured areas, as consistent with good manufacturing practice. Contractor shall provide transparent lenses having a clear bluish tint and produced from resin, which has been suitably ultraviolet stabilized to reduce the effects of ultraviolet radiation on their color properties. Resins used shall meet the requirements for the self-extinguishing classification of ASTM D 635. Resin shall have a minimum impact strength, Izod notched of twelve foot pounds per inch (12.0 ft. lbs./inch) when tested in accordance with ASTM D 256, Method A, using a one-

quarter by one-half inch (1/4” x 1/2") bar molded in accordance with ASTM-recommended practice.

The Contractor shall furnish a certificate of compliance from the lens fabricator that all requirements contained in the paragraph above have been met.

The refractor shall be mounted in a doorframe assembly which shall be hinged to the luminaire at the house side and fastened at the street side by means of an automatic type latch.

The refractor and doorframe assembly shall be forced upward at the street side by spring pressure, against the gasket seat, when in the closed and latched position.

All gaskets shall be composed of a material capable of withstanding the temperature involved and they shall be securely held in place.

All parts of the luminaire shall be manufactured from corrosion-resistant materials.

Manufacturer's luminaire specifications, shop drawings, and photometric data shall be submitted and approved before installing any luminaire on the project.

Article 23.3 Measurement

Luminaires will be measured as units complete and in place, including all labor, equipment, and materials to provide a complete and functioning unit. No measurement for payment will be made until the functional test has been completed in accordance with Section 80.16, Article 16.2 – Field Tests.

Article 23.4 Basis of Payment

Payment for this Work shall be in accordance with Division 10, Section 10.07 - Measurement and Payment, and shall include full payment for all Work described in this Section.

Payment will be made under the following units:

ITEM	UNIT
Luminaire (Type) (Wattage/Lumens) (Vertical) (Cutoff) (Lateral)	Each

SECTION 80.24 BALLASTS

Article 24.1 General

Ballasts for high-intensity discharge lamps shall be an integral part of each luminaire and designed for the voltages and lamp types specified in the Drawings or Special Provisions. The current needed to start the lamps shall be less than the operating current.

Ballasts shall be the regulator type with copper windings electrically isolated from each other, and shall start and operate the lamps in temperatures down to -40°F. The allowable line voltage variation shall be at least plus and minus ten percent (10%).

High pressure sodium luminaires, except those with 1000 watt lamps, shall be equipped with magnetic regulator ballasts with the following additional operating characteristics:

1. The lamp wattage regulation spread at any time over the life of the lamp shall not exceed eighteen percent (18%) of nominal lamp watts at plus or minus ten percent (±10%) line voltage variations.
2. With nominal line and lamp voltages, the ballast shall regulate the lamp output to within five percent (5%) of the ballast design center, and sustain lamp operation with a minimum sixty percent (60%) voltage drop lasting four (4) seconds or less.
3. Grounded socket shell.

Luminaires with 1000 watt high pressure sodium lamps shall be equipped with auto-regulator ballasts that provide a maximum thirty percent (30%) lamp regulation spread, a minimum thirty-five percent (35%) voltage dip tolerance, and with nominal line and lamp voltages regulate lamp output to within five percent (5%) of the ballast design center.

Ballasts for use for soffit luminaires shall be furnished with mounting brackets attached and shall be equipped with terminal blocks for primary connections and lamp socket preconnected to the secondary for flush mounted luminaires and with terminal blocks for both primary and secondary connections for use with suspended luminaires.

The Contractor shall submit the ballast manufacturer's volt-watt trace and specification sheets to the Street Light Maintenance Supervisor for review and approval.

Article 24.2 Measurement

This item shall be considered incidental to other Work.

Article 24.3 Basis of Payment

No separate pay item will be allowed for this item.

SECTION 80.25 FALSEWORK LIGHTING

Article 25.1 General

When required by the Special Provisions, falsework lighting shall be installed where vehicular traffic with or without pedestrian traffic crosses through or under structure falsework.

Illumination of the portal faces of falsework shall be provided during the hours from dusk to dawn. Illumination of the pavement and pedestrian openings through or under falsework shall be provided twenty four (24) hours per day.

The Contractor shall submit a plan of the proposed lighting installations and shall not commence falsework construction until such Drawings have been reviewed by the Engineer. A subsequent review shall be made by the Engineer after falsework lights have been placed in operation.

Fixtures for illumination of roadway pavement between entrances and exit portals shall be enclosed in units with protective cover lens.

Fixture housing shall be heavy gauge, anodized aluminum and shall have an etched, anodized aluminum reflecting surface, or equivalent. Beam spread shall be between one hundred (100) and one hundred thirty (130) degrees.

Fixtures shall be equipped with high temperature glazed porcelain medium base sockets and six foot (6') conductors for splicing, approved by UL for outdoor use.

Fixtures shall be fully adjustable with bracket and locking screws on a mounting plate and shall provide mounting directly to a standard metal junction box.

Fixtures for pedestrian passageways shall be porcelain box receptacles mounted on standard metal junction boxes and equipped with wire lamp guards. Porcelain box receptacles shall be rated at six hundred sixty (660) watts, two hundred fifty (250) volts. Wire lamp guards shall be made of No. 10 AWG wire and shall be suitable for general construction work.

Lamps shall be of the medium base incandescent type. For pavement illumination, lamps shall be one hundred fifty (150) watts minimum. For pedestrian passageway illumination, lamps shall be one hundred (100) watts minimum.

The face of all falsework and forms located within or adjacent to the traveled way, on the approach side, shall be fully illuminated by a minimum of four (4) three hundred (300) watt PAR reflector flood lights directed upon the vertical and horizontal supports. The lights shall be located a minimum of ten feet (10') and a maximum of fifteen feet (15') from the portal faces adjacent to the traveled way and mounted a minimum of twelve feet (12') and a maximum of fifteen feet (15') high. When a median area contains falsework, a minimum of one (1) additional three hundred (300) watt PAR reflector flood light shall be installed in the same manner to illuminate the median support. Each flood light shall be aimed in such a manner as to preclude glare to oncoming motorists. Floodlights shall be mounted on temporary wood poles set in the ground and located on both sides of the traveled way.

For illumination of roadway pavement between entrance and exit portals, a continuous row of fixtures shall be installed over the center of each lane beneath the falsework structure at intervals of not more than fifteen feet (15') , with the end fixtures not further than seven feet (7') inside the portal faces. Mounting height of fixtures over the pavement shall be as directed.

Pedestrian openings, through or under falsework, shall be illuminated with fixtures centered over the passageway at intervals of not more than fifteen feet (15') , with the end fixtures not more than seven feet (7') inside the portal faces and at a height of ten feet (10'), unless otherwise directed.

For roadway pavement and portal face illumination, No. 12 AWG conductors with Type XHHW insulation shall be used. For pedestrian passageways, conductors shall be No. 12 AWG and enclosed in a one-half inch(1/2") unpainted, zinc-coated metallic conduit.

Contractor shall provide two branch circuits. Pedestrian passageway lights and roadway pavement lights shall be on one (1) circuit and portal face floodlights shall be on a separate circuit. Each branch circuit shall be fused, not to exceed twenty (20) amperes.

The above-specified portal lighting shall be installed on the day that vertical supports are erected and before traffic is permitted to pass between these supports during the hours from dusk to dawn. The other falsework lights shall be installed as soon as the members on which they are to be supported are in place.

Upon completion of the project or when directed, falsework lighting equipment shall remain the property of the Contractor and shall be removed from the site of the Work.

Article 25.2 Measurement

Falsework lighting for each location will be measured as one lot, installed complete, including all labor, equipment, and material required to provide a complete and functioning system.

Article 25.3 Basis of Payment

Payment for this Work shall be in accordance with Division 10, Section 10.07 - Measurement and Payment, and shall include full payment for all Work described in this Section.

Payment will be made under the following units:

ITEM	UNIT
Falsework Lighting	Lot

SECTION 80.26 INTERCONNECT CABINET

Article 26.1 General

Install the interconnect cable termination cabinet when called for in the Drawings or when three (3) or more interconnect cables terminate at the controller location. All cables shall be terminated in the interconnect cable cabinet and none in the controller cabinet.

Furnish an interconnect termination cabinet that:

1. Is constructed from 16 gauge galvanized steel with an ANSI 61 gray polyester powder coat inside and out.
2. Meets NEMA Standards for Type 3R enclosures.
3. Has a 16-gauge galvanized steel continuous hinge with stainless steel pin.
4. Has a cover fastened securely with captive plated steel screws.
5. Is provided with a hasp and staple for padlocking.
6. Has no gasketing or knockouts.
7. Has no ventilating cover or louvers.
8. Has a standoff mounted back panel with grounding lug assembly.

Article 26.2 Measurement

Interconnect cabinets will be measured as units installed complete and in place, including all labor, equipment, and material to provide a complete and functioning unit.

Article 26.3 Basis of Payment

Payment for this Work shall be in accordance with Division 10, Section 10.07 - Measurement and Payment, and shall include full payment for all Work described in this Section.

Payment will be made under the following units:

ITEM	UNIT
Interconnect Cabinet	Each

SECTION 80.27 PROTECTIVE POST ASSEMBLY

Article 27.1 General

Protective post assembly shall be a concrete-filled Schedule 40, steel pipe installed in accordance with the appropriate Standard Details.

Article 27.2 Measurement

Protective post assembly will be measured as units installed complete and in place, including all labor, equipment, and material to provide a complete and functioning unit.

Article 27.3 Basis of Payment

Payment for this Work shall be in accordance with Division 10, Section 10.07 - Measurement and Payment, and shall include full payment for all Work described in this Section.

Payment will be made under the following units:

ITEM	UNIT
Protective Post Assembly	Each

SECTION 80.28 SALVAGING ELECTRICAL EQUIPMENT

Article 28.1 General

Unless otherwise specified or shown on the Drawings or Specifications, existing electrical equipment including but not limited to: luminaires, standards, mast arms, poles, caps, handhole covers, mounting bolts, controllers, cabinets, optical detectors, signal heads, pedestrian heads, service equipment, and junction box lids shall be salvaged and delivered to the Municipality of Anchorage Electronics Warehouse or the Municipality of Anchorage Pole Yard to be placed as directed by the Traffic Engineer.

Traffic Signal Electronics personnel and Street Light Maintenance personnel will be allowed to select the equipment and pole/arm items they would like to salvage. Contractor is responsible for disposal of all remaining items. All poles and arms not selected for salvage shall have the pole plate or arm plate cut off to render the item unusable.

Contractor shall contact the Traffic Signal Electronics Shop Foreman, at 343-8355, one week prior to the tentative delivery date.

Salvaged poles and mast arms shall be stripped of all wire and hardware and any damaged areas, and exposed hole edges shall be cleaned and painted with cold galvanizing paint in accordance with Section 80.16, Article 16.3 - Galvanizing. All caps, hand-hole covers, mast arms and mounting bolts shall be returned with the pole.

Removal, wire and hardware stripping, listed cleaning and cold galvanize painting, and delivery of all salvaged electrical equipment shall be considered incidental to the Contract and no separate payment shall be made.

When a controller assembly is to be salvaged, the salvage material shall include timing modules, switches, detector control units, conflict monitor unit, and all other equipment contained in the controller cabinet prior to award of the Contract.

Care shall be exercised in removing and salvaging electrical equipment so that it will remain in its original form and existing condition. The Contractor will be required to replace, at his expense, any of the above-mentioned electrical equipment which has been damaged or destroyed by his operations.

Unless otherwise specified, underground conduit, conductors, foundations and detectors not reused shall become the property of the Contractor and shall be removed from the project right-of-way. If said materials do not interfere with other construction, they may, with approval from the Engineer, be abandoned in place except that conductors must be removed from conduit prior to abandonment. Foundations abandoned in place shall conform to the requirements of Section 80.03 – Removing and Replacing Improvements.

Holes formed by removing pull boxes and foundations shall be filled with material equivalent to the original and compacted to the same density as the surrounding material.

When existing electrical equipment is to be reused, the Contractor shall furnish and install all necessary materials and equipment, including signal mounting brackets, anchor bolts, nuts, washers and concrete as required to complete the new installation.

All traffic signal, flashing beacon and lighting fixtures to be reinstalled shall be cleaned, relamped, and reconditioned in accordance with Section 80.16, Article 16.4 – Painting for Steel Structures.

Salvaged materials required to be reused and found to be unsatisfactory by the Engineer shall be replaced by new material and the cost will be paid as extra Work as provided in Division 10, Sections 10.05 – Control of Work and 10.07 – Measurement and Payment.

Article 28.2 Measurement

Measurement for removal of poles in this Section is per each unit removed; and includes all work and materials necessary to remove poles, hardware disposal, cutting poles to render them unusable, disassemble, salvage, disposal, and delivery to the Municipality of Anchorage Pole Yard as specified in the Drawings or in the Special Provisions. When Drawings are unclear as to the method of pole salvage or disposal, the Contractor shall contact the Traffic Engineer to receive specific instructions.

Removal of the pole foundation, in accordance with Section 80.03 - Removal and Replacing Improvements, and disposal of the pole foundation is incidental to the pay items in this Section. Salvage and delivery of existing signs, signal hardware and illumination hardware shall also be considered incidental to the pole removal pay items.

If Owner declines ownership, the poles, mast arms, and associated hardware become Contractor property.

Article 28.3 Basis of Payment

Payment for this Work shall be in accordance with Division 10, Section 10.07 - Measurement and Payment, and shall include full payment for all Work described in this Section.

Payment will be made under the following units:

ITEM	UNIT
Remove Luminaire Pole	Each
Remove Signal Mast Arm or Combination Pole	Each
Remove Signal Pedestal or Pedestrian Pushbutton Pole	Each

MUNICIPALITY OF ANCHORAGE
STANDARD SPECIFICATIONS

DIVISION 80
TRAFFIC SIGNALS AND ILLUMINATION
STANDARD DETAILS

STANDARD CONSTRUCTION SPECIFICATIONS
MISCELLANEOUS
DIVISION 80
INDEX OF STANDARD DETAILS

80-1	Saw Cut Trench
80-2	Concrete Foundation Load Center Type 1A
80-3	Concrete Foundation Load Center Type 1
80-4	Concrete Foundation Type 1 Load Center Section AA
80-5	TS2 Controller Cabinet Foundation
80-6	Concrete Foundation TS2 Controller Section AA
80-7	Concrete Foundation TS2 Controller Section BB
80-8	Vault Type “M” Controller Cabinet Foundation
80-9	Poured Concrete Luminaire Pole Foundation
80-10	Poured Concrete Foundation Signal Mast Arm Pole
80-11	Poured Concrete Spread Footing Signal Pole Foundation
80-12	Concrete Foundations for Signal Pedestal Pole and Pedestrian Push Button Pole
80-13	Driven Steel Pile Light Pole Foundation
80-14	Driven Steel Pile Signal Pole Foundation
80-15	Pedestrian Push Button Pole
80-16	Signal Pedestal Pole
80-17	Pedestal Signal Pole Slip-Base and Adapter Detail
80-18	Direct Imbedded Luminaire Pole
80-19	Flange-Mounted Luminaire Pole
80-20	Luminaire Arm Detail
80-21	Driven Steel Pipe Pole Assemblies
80-22	Flange-Mounted Detail for Concrete Luminaire Base
80-23	Concrete Luminaire Base Slip-Base Detail
80-24	Signal Mast Arm Pole and Combination Signal/Luminaire Pole
80-25	Signal Mast Arm/Pole Design Loading
80-26	Details-Signal Mast Arm Pole and Signal/Luminaire Pole
80-27	Side-Mounted Signal Details
80-28	Pedestrian Push Button Assembly
80-29	Post Top and Mast Arm Mounted Signal Details
80-30	Type I Junction Box
80-31	Type IA Junction Box
80-32	Type II Junction Box

80-33	Type III Junction Box
80-34	Post Mounted Load Center - Type 3
80-35	Post Mounted Load Center - Type 2
80-36	Pad Mounted Load Center - Type 1A
80-37	Pad Mounted Load Center - Type 1
80-38	Load Center Wiring Diagram “A”
80-39	Panel Schedule for Wiring Diagram “A”
80-40	Load Center Wiring Diagram “B”
80-41	Panel Schedule for Wiring Diagram “B”
80-42	Load Center Wiring Diagram “C”
80-43	Panel Schedule for Wiring Diagram “C”
80-44	Load Center Wiring Diagram “D”
80-45	Panel Schedule for Wiring Diagram “D”
80-46	Load Center Wiring Diagram “E”
80-47	Panel Schedule for Wiring Diagram “E”
80-48	Load Center Wiring Diagram “F”
80-49	Panel Schedule for Wiring Diagram “F”
80-50	Load Center Wiring Diagram “G”
80-51	Panel Schedule for Wiring Diagram “G”
80-52	Conduit Encased Loop Detector
80-53	Loop Detector Installation Details
80-54	Loop Detector Home Run
80-55	Opticom Detector Installation Details
80-56	Signal Heads
80-57	Speed Limit Sign Beacon
80-58	Mast Arm Mounted Sign Beacons
80-59	Warning Sign Beacon
80-60	Splice Detail Loop Detector Leads
80-61	Signal Head Wiring Details
80-62	Interconnect Cable Termination Cabinet
80-63	Protective Post Assembly

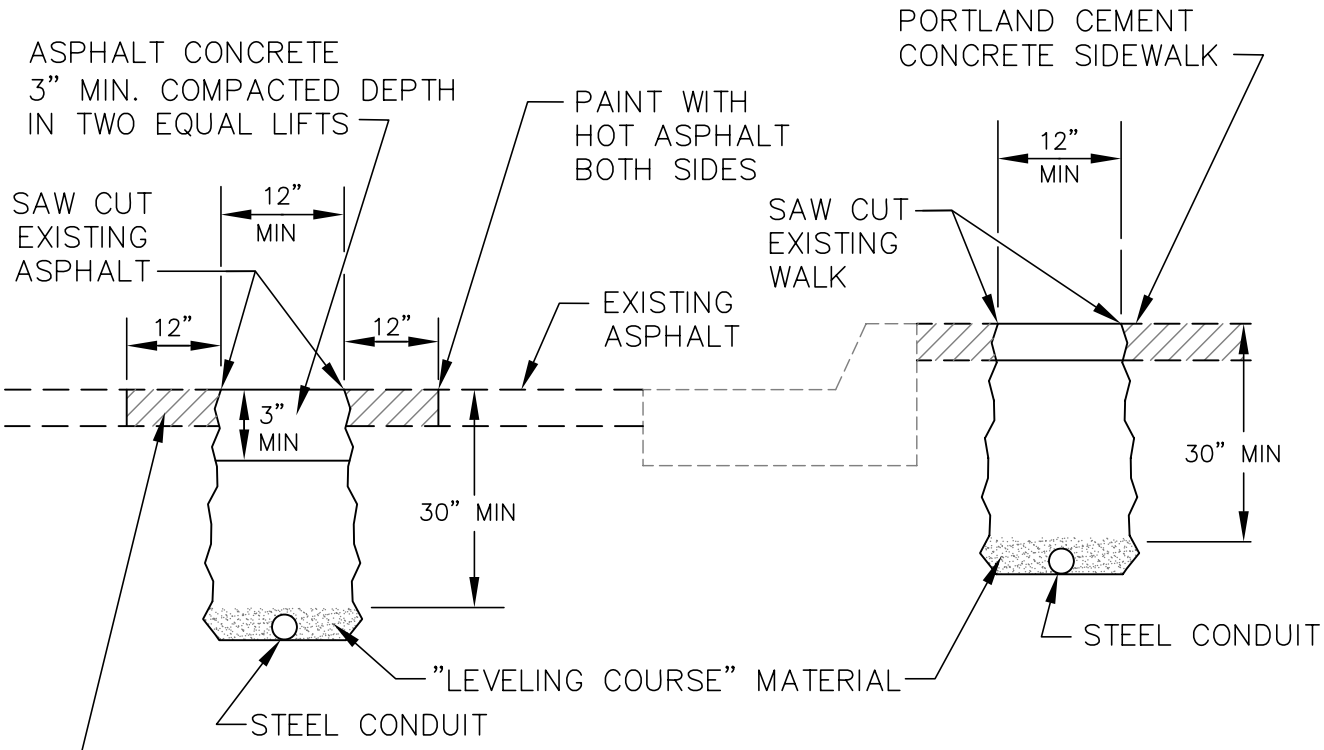

AFTER TRENCH BACKFILL HAS BEEN COMPACTED AN ADDITIONAL 12" OF ASPHALT WILL BE REMOVED FROM EACH EDGE OF THE ORIGINAL CUT. THE ENGINEER MAY REQUIRE MORE THAN A 12" ADDITIONAL CUT IF THE EXISTING PAVEMENT HAS BEEN LIFTED IN THE REMOVAL PROCESS OR IF THE JOINT DOES NOT OCCUR ON UNDISTURBED MATERIAL.

MUNICIPALITY OF ANCHORAGE	SCALE: NTS APPROVED: REVISED: 10/07	SAW CUT TRENCH	SECTION # 80.02 DETAIL # 80–1

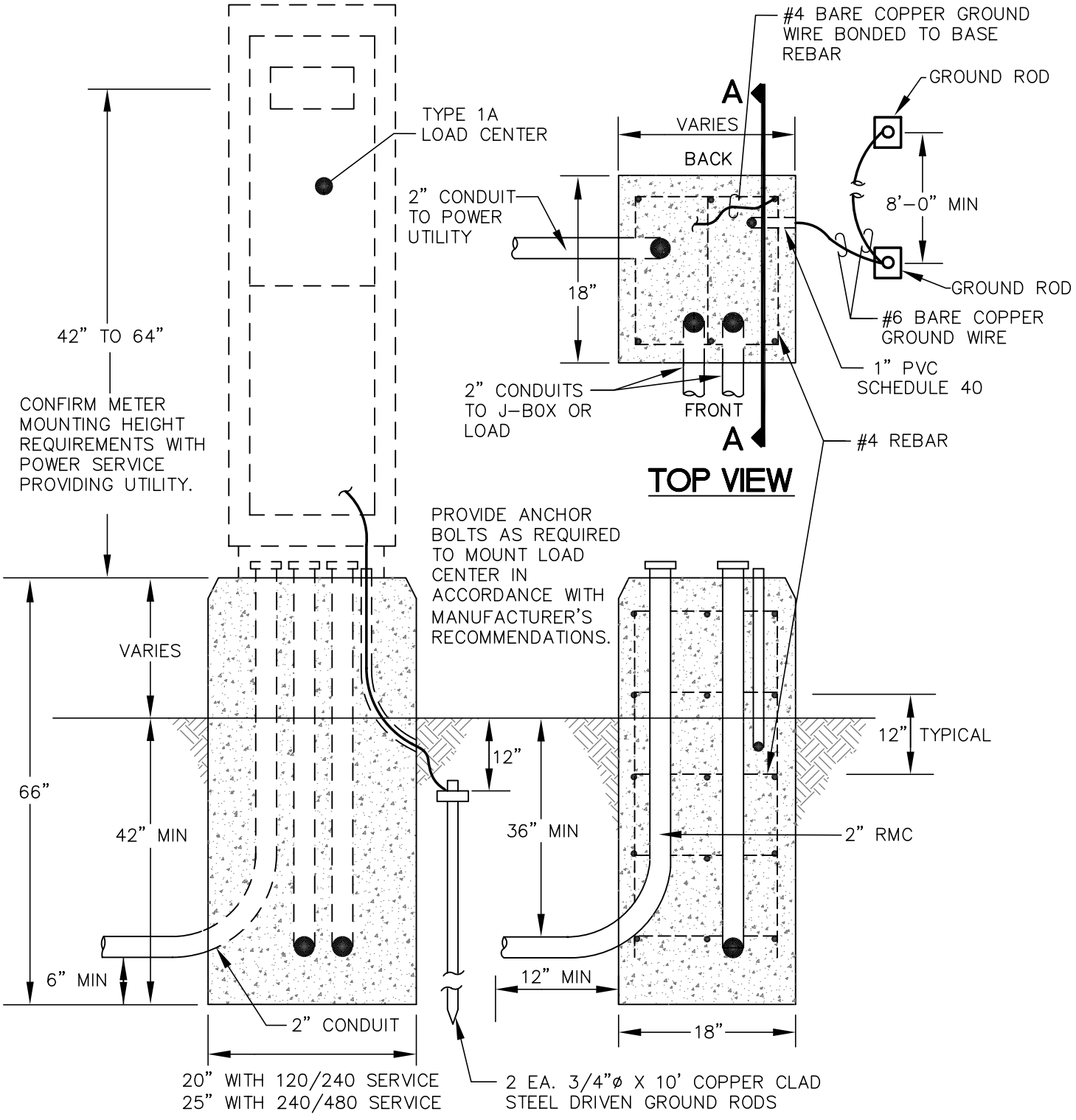

NOTES:

1. ORIENTATION OF CONDUIT SWEEPS IS REPRESENTATIVE. CONTRACTOR SHALL COORDINATE CONDUIT ORIENTATION WITH THE ENGINEER AND UTILITY.
2. PROVIDE NON-FROST SUSCEPTIBLE COMPACTED BACKFILL.
3. INSTALL TYPE 1A OR TYPE 2 JUNCTION BOX ADJACENT TO LOAD CENTER FOUNDATION. JUNCTION BOX SIZE TO BE DETERMINED USING THE LATEST VERSION OF MOA DESIGN CRITERIA MANUAL, CHAPTER 6.

MUNICIPALITY OF ANCHORAGE	SCALE: NTS APPROVED: REVISED: 5/08	# CONCRETE FOUNDATION LOAD CENTER TYPE 1A	SECTION # 80.04 DETAIL # 80-2

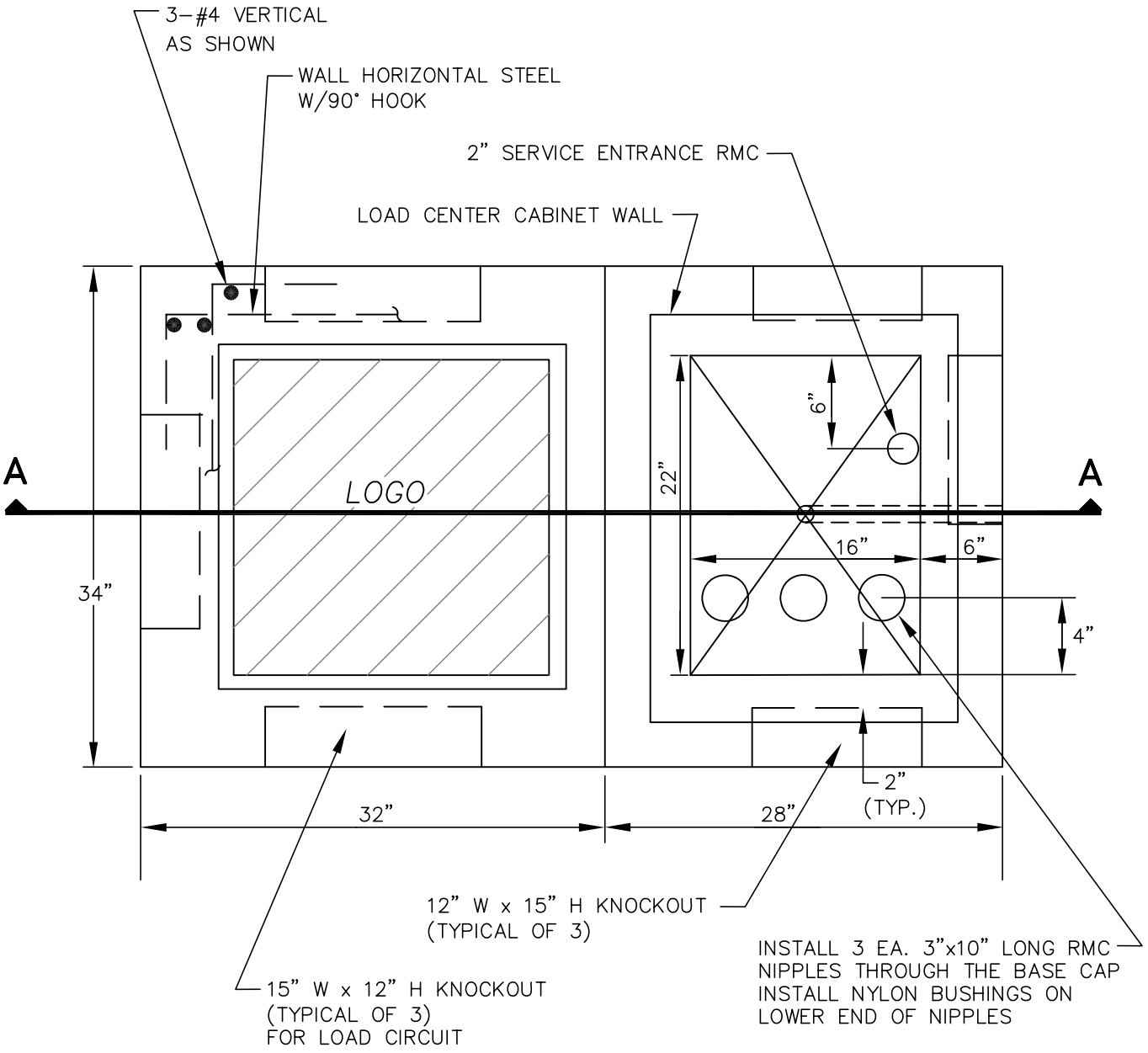

PLAN VIEW

NOTE:

1. SEE DETAIL 80–4 FOR SECTION AA.

MUNICIPALITY OF ANCHORAGE	SCALE: NTS APPROVED: REVISED: 5/08	**CONCRETE FOUNDATION LOAD CENTER TYPE 1**	SECTION # 80.04 DETAIL # 80–3

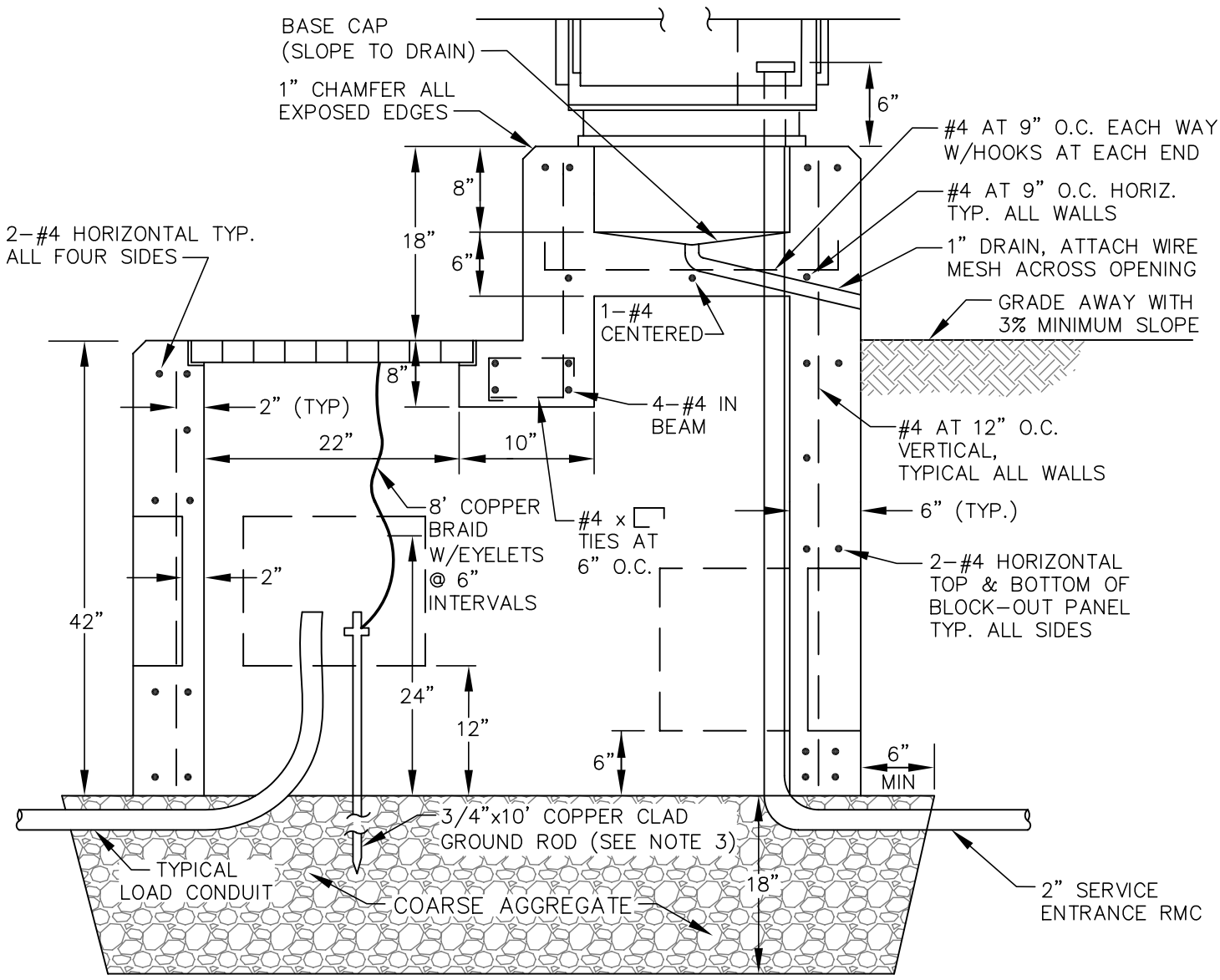

SECTION AA

NOTES:

1. STOP HORIZ. & VERT. STEEL AT BLOCK-OUT PANELS & USE 90 HOOK. USE 2-#4 HORIZ. & VERT. EXTRA BARS ALL SIDES AS SHOWN.
2. SEE STANDARD DETAIL 80-3 FOR PLAN VIEW.
3. ADD SECOND 3/4" x 10' GROUND ROD 8' FROM LOAD CENTER PER NEC.

MUNICIPALITY OF ANCHORAGE	SCALE: NTS APPROVED: REVISED: 5/08	CONCRETE FOUNDATION TYPE 1 LOAD CENTER SECTION AA	SECTION # 80.04 DETAIL # 80-4

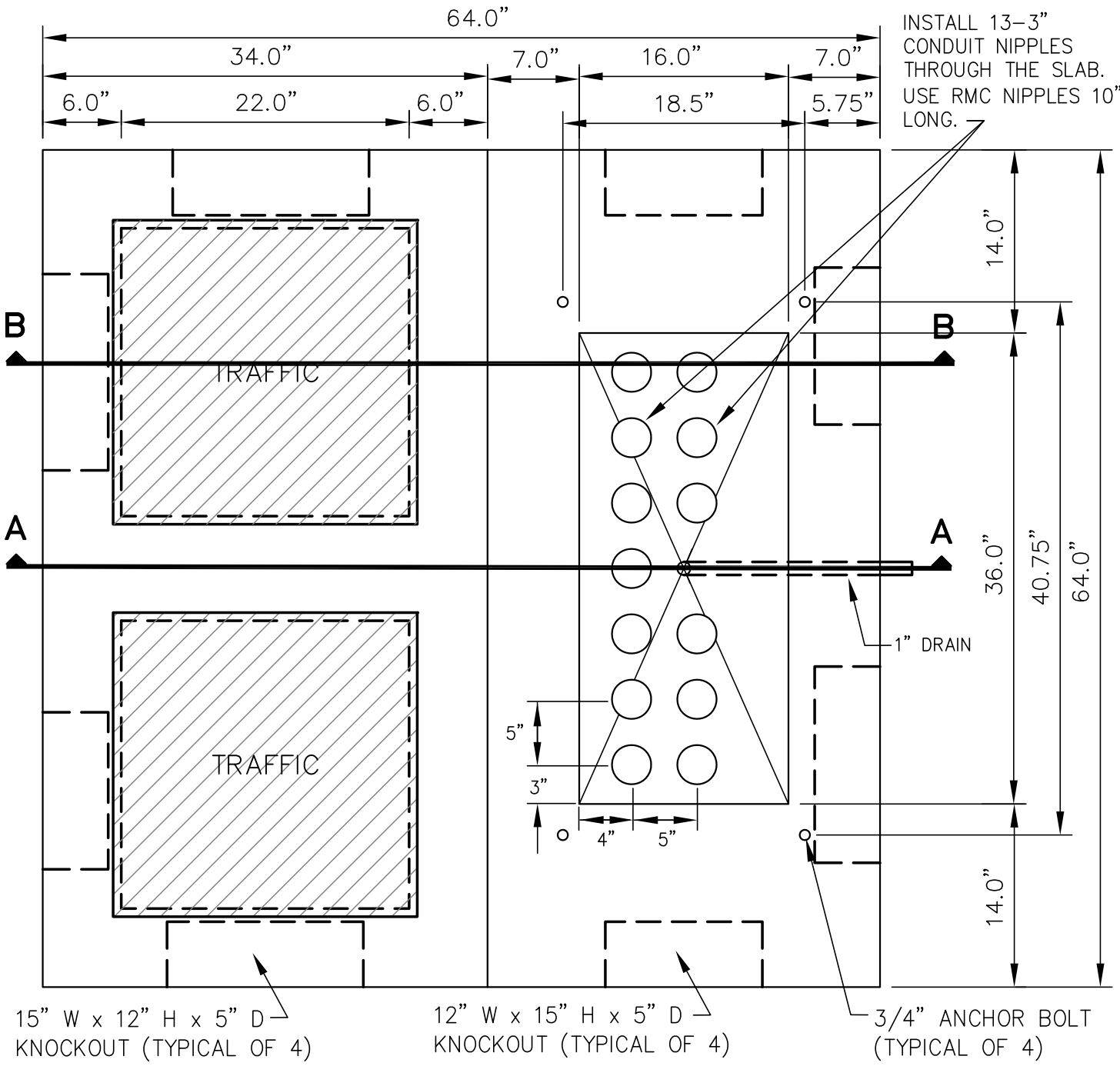

PLAN VIEW

NOTES:

1. SEE STANDARD DETAIL 80–6 FOR SECTION AA
2. SEE STANDARD DETAIL 80–7 FOR SECTION BB.
3. ANCHOR BOLTS SHALL NOT PROTRUDE MORE THAN 1.5" ABOVE THE TOP OF THE FOUNDATION. CONTRACTOR SHALL USE ANCHOR BOLT DIMENSIONS SPECIFIED BY THE CABINET MANUFACTURER.
4. SEAL UNUSED CONDUIT STUBS WITH WATERTIGHT CAPS. SEAL STUBS CARRYING CONDUCTORS WITH WATERTIGHT SEALING BUSHINGS DESIGNED TO SEAL AROUND CONDUCTORS AND AGAINST THE CONDUIT WALLS.
5. INSTALL TRAFFIC CONTROLLER WITHIN 1–DEGREE OF PLUMB.

REVISION: 5/2011 CHANGED TO TS2 CONTROLLER CABINET

MUNICIPALITY OF ANCHORAGE	SCALE: NTS APPROVED: REVISED: 5/2011	TS2 CONTROLLER CONCRETE CABINET FOUNDATION	SECTION # 80.04 DETAIL # 80–5

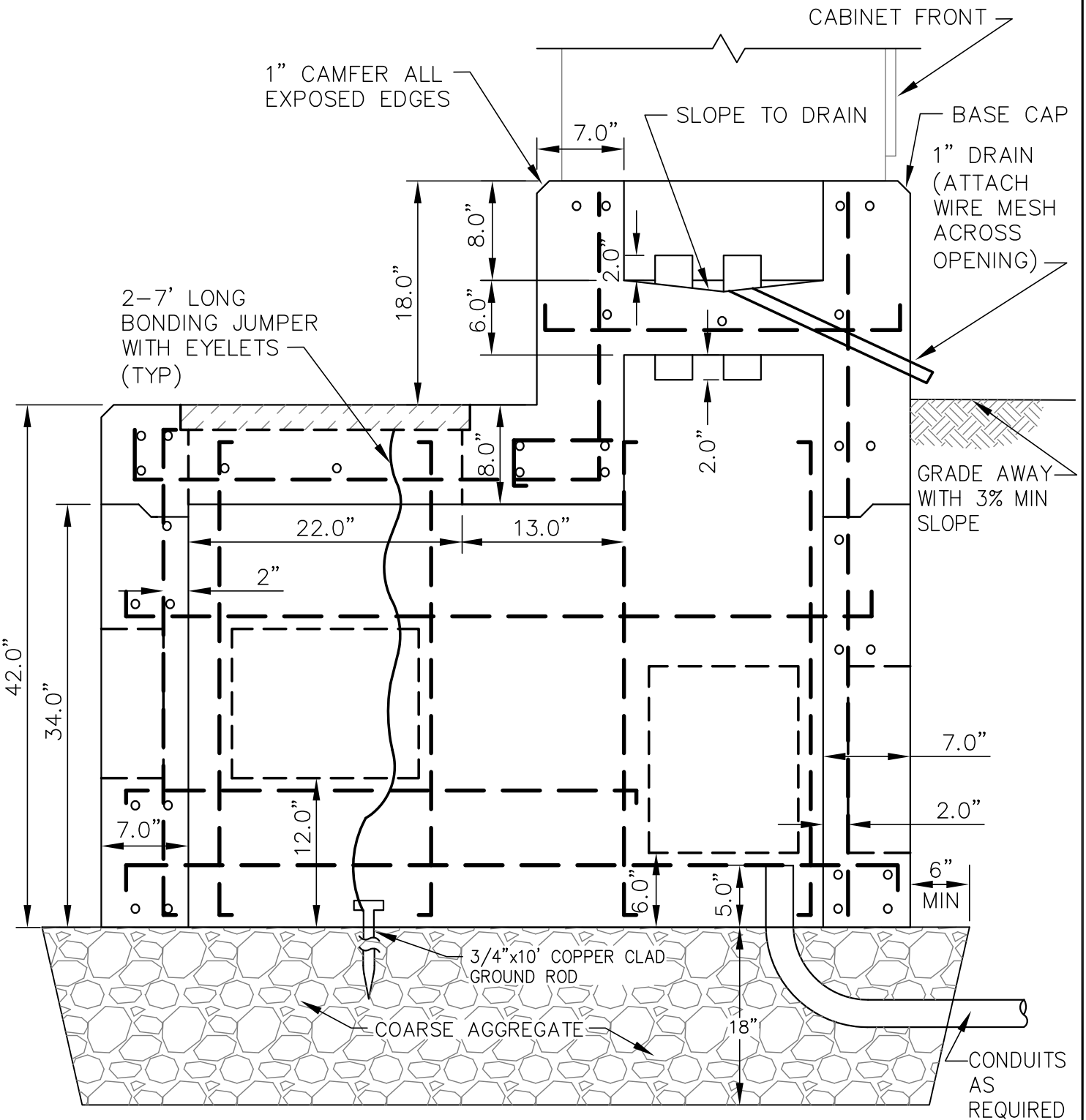

SECTION AA

NOTE:

1. SEE STANDARD DETAIL 80-7, SECTION BB, FOR REBAR DETAILS.

REVISION: 5/2011 CHANGED TO TS2 CONTROLLER CABINET

MUNICIPALITY OF ANCHORAGE	SCALE: NTS APPROVED: REVISED: 5/2011	**CONCRETE FOUNDATION TS2 CONTROLLER SECTION AA**	SECTION # 80.04 DETAIL # 80-6

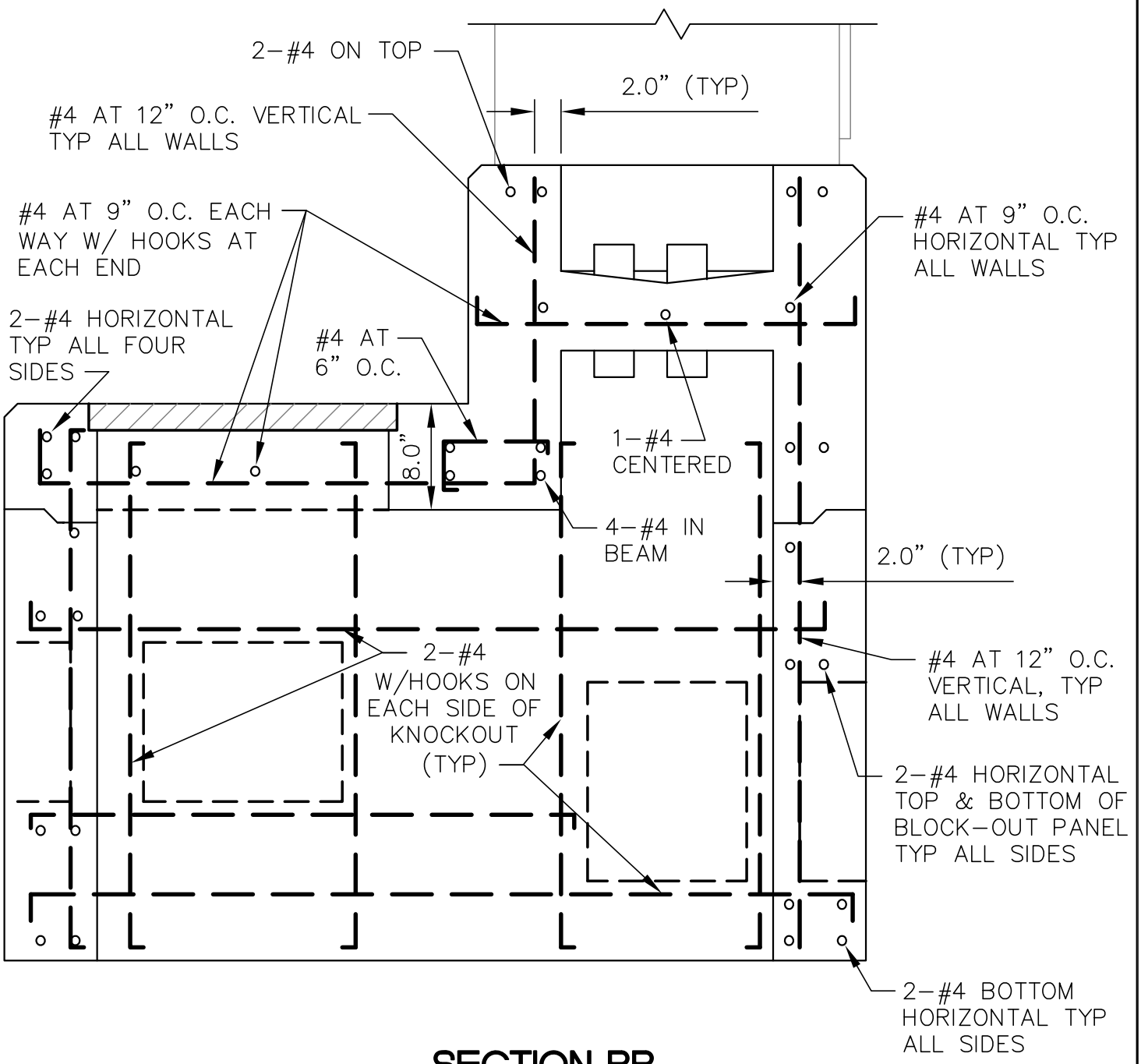

SECTION BB

NOTE:

STOP HORIZONTAL & VERTICAL STEEL AT THE BLOCK–OUT PANELS & THE JOINT USING 90 DEGREE HOOKS. USE 2 EXTRA #4 HORIZONTAL & VERTICAL BARS ALL SIDES AS SHOWN.

REVISION: 5/2011 CHANGED TO TS2 CONTROLLER CABINET

MUNICIPALITY OF ANCHORAGE	SCALE: NTS APPROVED: REVISED: 5/2011	**CONCRETE FOUNDATION TS2 CONTROLLER SECTION BB**	SECTION # 80.04 DETAIL # 80–7

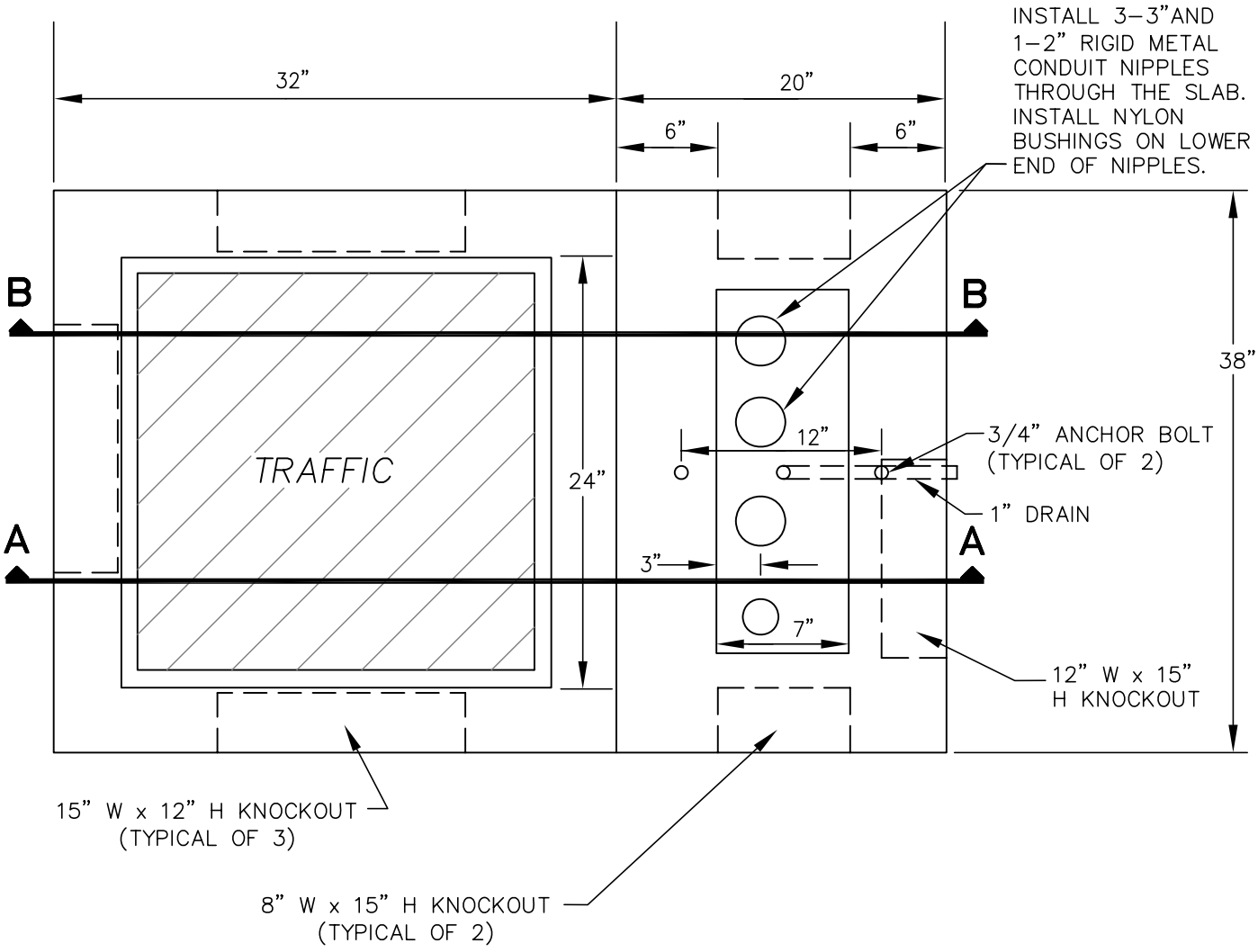

PLAN VIEW

NOTES:

1. SEE DETAIL 80–6 FOR SECTION AA.
2. SEE DETAIL 80–7 FOR SECTION BB.
3. ANCHOR BOLTS SHALL NOT PROTRUDE MORE THAN 1–1/2" ABOVE THE TOP OF THE FOUNDATION. USE CABINET MANUFACTURER SPECIFIED ANCHOR BOLT DIMENSIONS.
4. SEAL UNUSED CONDUIT STUBS WITH WATERTIGHT CAPS.

MUNICIPALITY OF ANCHORAGE	SCALE: NTS APPROVED: REVISED: 5/08	**VAULT TYPE "M" CONTROLLER CABINET FOUNDATION**	SECTION # 80.04 DETAIL # 80–8

NOTES:
1. CONNECT NO. 4 GROUND WIRE TO ONE OF THE TOP SPIRALS WITH TWO IRREVERSABLE, HYDRAULICALLY SWAGED CONNECTORS AS SHOWN. GROUND WIRE SHALL BE BARE SOLID, STRANDED, OR BRAIDED COPPER. PROTECT GROUND WIRE WITH CONDUIT AS SHOWN AND FILL CONDUIT WITH SILICON SEALANT. ALLOW 1" OF THE SLEEVE AND 24" OF CONDUCTOR TO PROTRUDE FROM THE FOUNDATIONS.

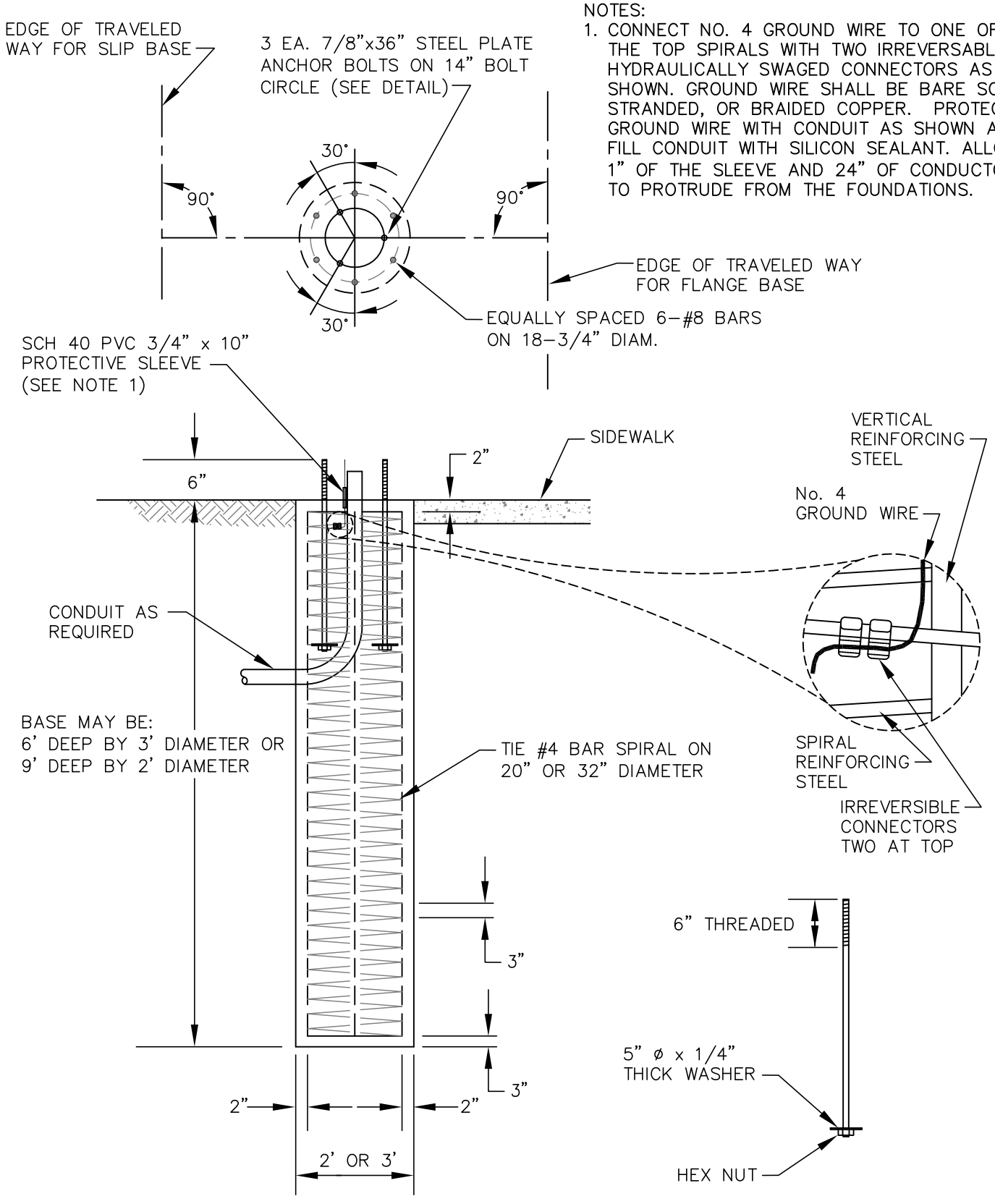

STEEL PLATE ANCHOR BOLT

MUNICIPALITY OF ANCHORAGE	SCALE: NTS APPROVED: REVISED: 3/13	**POURED CONCRETE LUMINAIRE POLE FOUNDATION**	SECTION # 80.04 DETAIL # 80–9

REVISION: 12/09 FIXED REBAR REFERENCE FOR SPIRAL; 3/13 ADDED GROUNDING DETAIL

FOUNDATION DETAIL FOR GRANULAR SOILS, FREE OF ORGANICS & DEBRIS. FOR OTHER CONDITIONS, PROVIDE A FOUNDATION INVESTIGATION TO DETERMINE IMBEDMENT DEPTH AND ADEQUACY OF DESIGN.

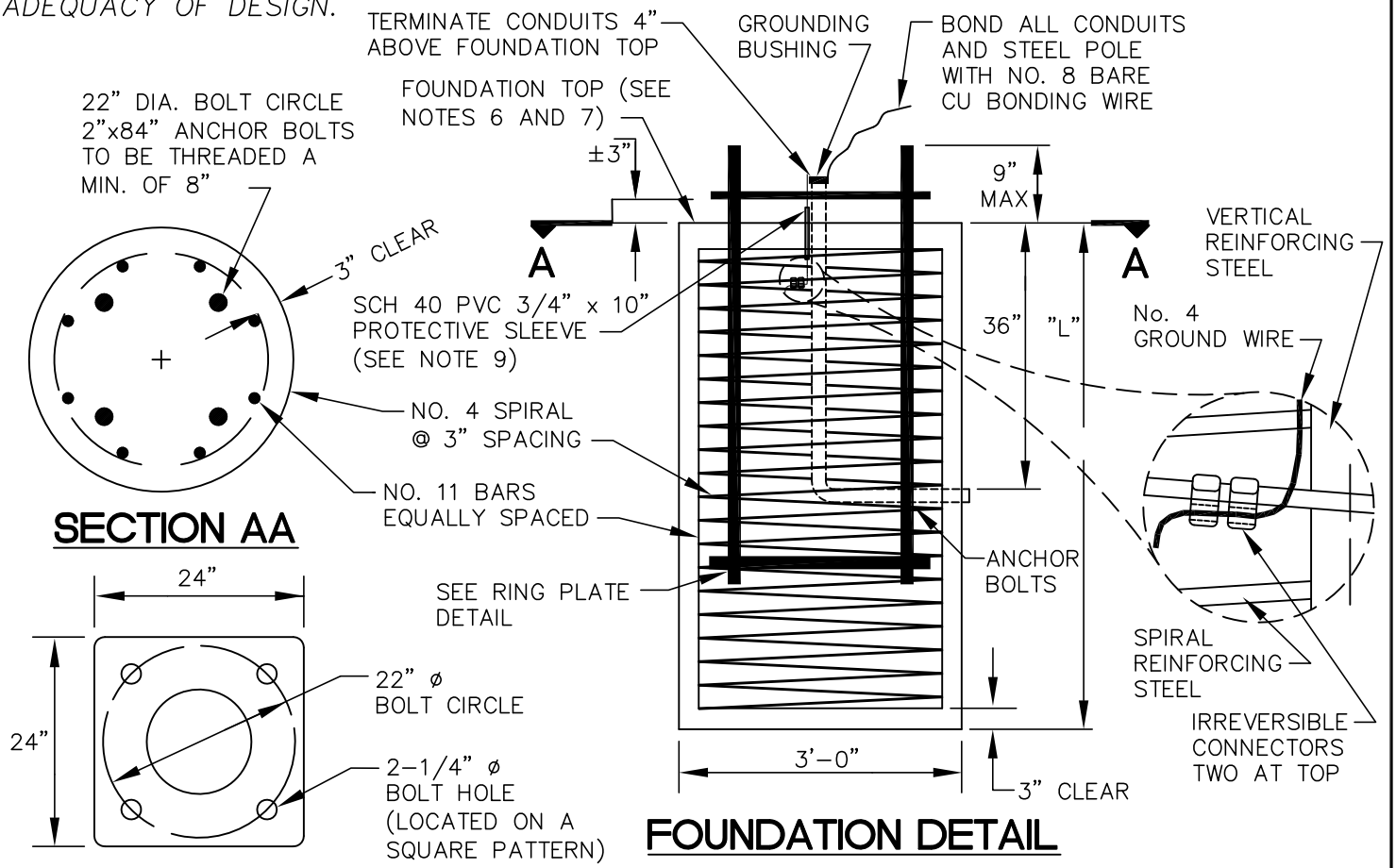

SECTION AA

FOUNDATION DETAIL

BASE PLATE DETAIL

SINGLE ARMS ≤ 40', L=9'-0"

SINGLE ARMS OVER 40' AND ≤ 60', L=12'-0"

DUAL MAST ARM BOTH ≤ 30', L=9'-0" DUAL

SEE NOTE 8 FOR ALL OTHERS

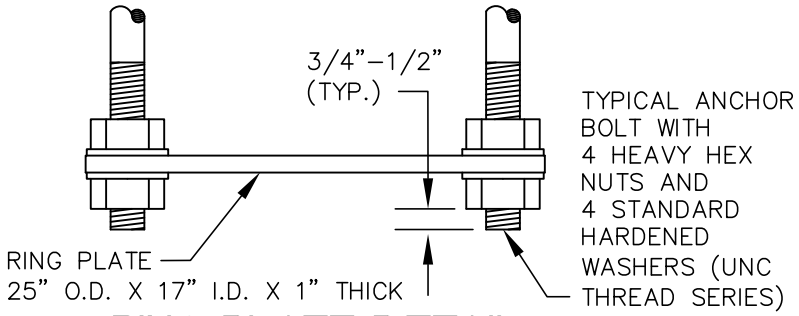

RING PLATE DETAIL

NOTES:

1. ANCHOR BOLTS SHALL CONFORM TO ASTM F1554, WITH GRADE AS SPECIFIED BY THE MANUFACTURER.
2. REINFORCING STEEL SHALL CONFORM TO ASTM A615, GRADE 60 FOR DEFORMED BARS OF BILLET STEEL.
3. EACH SPIRAL REBAR UNIT WITHIN EACH FOOTING SHALL HAVE 1-1/2 TURNS OF THE REBAR AT EACH END OF THE UNIT.
4. GALVANIZING OF ANCHOR BOLTS, NUTS, AND WASHERS SHALL CONFORM TO ASTM A153.
5. STEEL ANCHOR PLATES SHALL CONFORM TO ASTM A36.
6. TOP OF CONCRETE FOUNDATION SHALL HAVE A BROOMED FINISH.
7. REFERENCE TOP BACK OF CURB IN ESTABLISHING FOUNDATION TOP ELEVATION. TOP OF FOUNDATION SHALL BE FLUSH WITH SIDEWALK/PAVING FINISH GRADE OR 2"-4" ABOVE FINISH GROUND ELEVATION.
8. SINGLE MAST ARMS OVER 60' OR DUAL MAST ARMS WITH ONE OR BOTH ARM(S) OVER 30' REQUIRE PROJECT SPECIFIC FOUNDATION DESIGN AND SHALL BE CONSTRUCTED AS SHOWN ON THE DRAWINGS.
9. CONNECT NO. 4 GROUND WIRE TO ONE OF THE TOP SPIRALS WITH TWO IRREVERSABLE, HYDRAULICALLY SWAGED CONNECTORS AS SHOWN. GROUND WIRE SHALL BE BARE SOLID, STRANDED, OR BRAIDED COPPER. PROTECT GROUND WIRE WITH CONDUIT AS SHOWN AND FILL CONDUIT WITH SILICON SEALANT.ALLOW 1" OF THE SLEEVE AND 24" OF CONDUCTOR TO PROTRUDE FROM THE FOUNDATIONS.

MUNICIPALITY OF ANCHORAGE	SCALE: NTS APPROVED: REVISED: 3/13	# POURED CONCRETE FOUNDATION SIGNAL MAST ARM POLE	SECTION # 80.04 DETAIL # 80-10

REVISION: 12/09 EDITED NOTE TOP LEFT CORNER TO SIMPLIFY BOLT REQUIREMENT; 12/12 FIXED BOLT DIMENSIONS 3/13 ADDED GROUNDING DETAIL

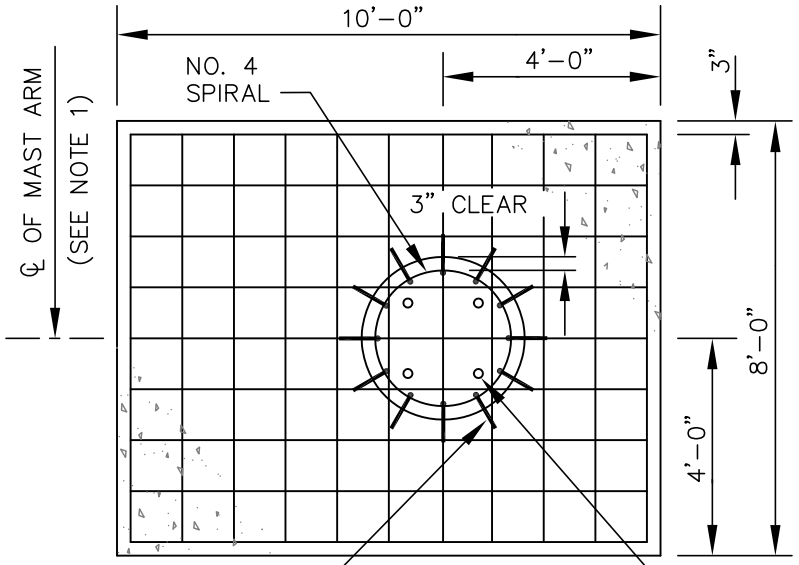

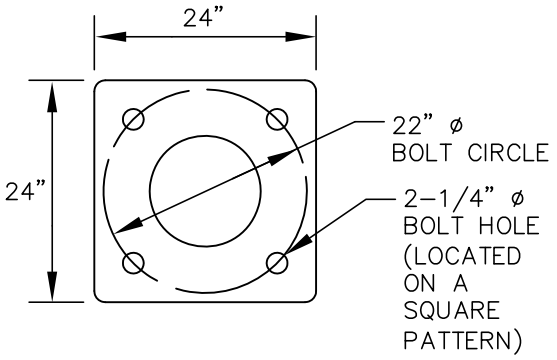

BASE PLATE DETAIL

NO. 8 BARS
EVENLY SPACED

PLAN VIEW

(4) 2"x64" ANCHOR BOLTS WITH
(4) HEX NUTS AND (4) WASHERS
PER BOLT (UNC THREAD SERIES)

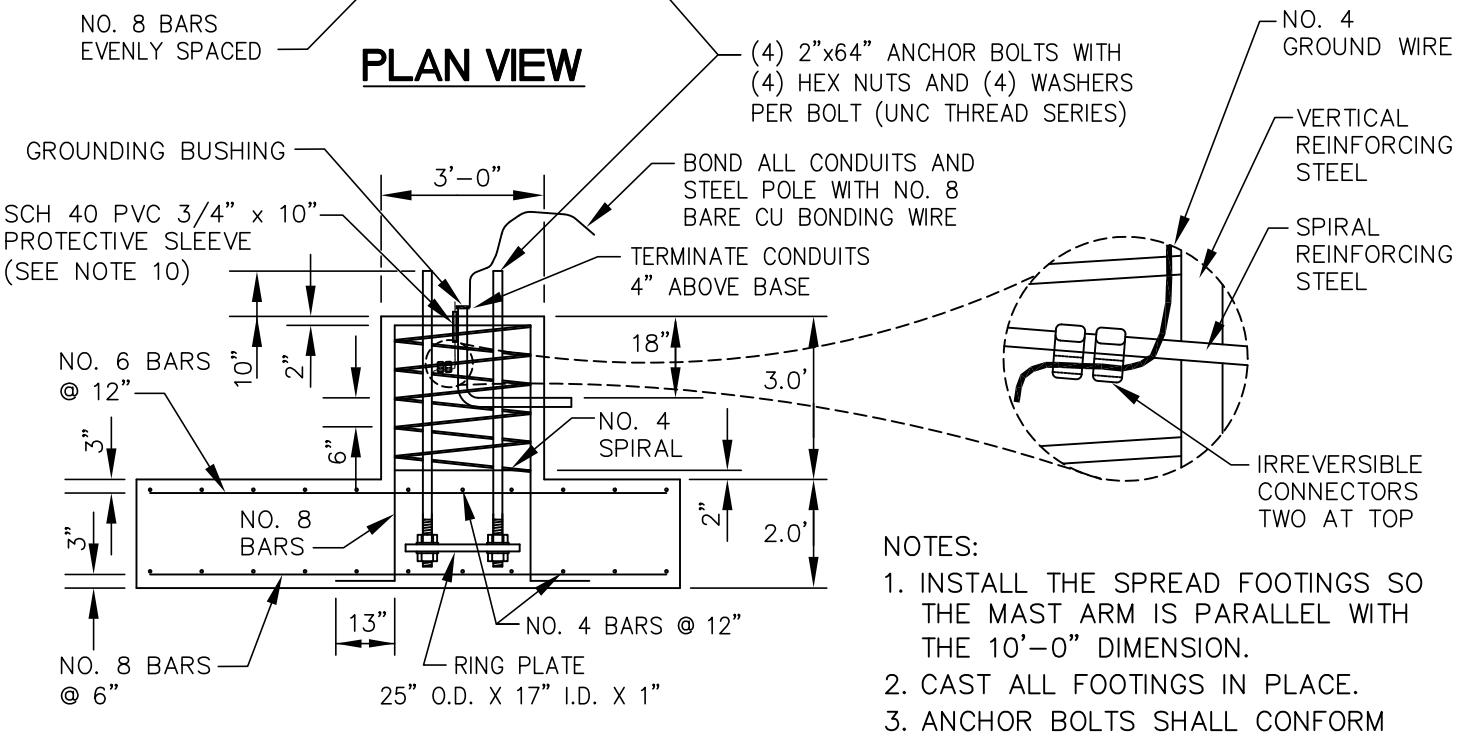

SPREAD FOOTING DETAIL

NOTES:

1. INSTALL THE SPREAD FOOTINGS SO THE MAST ARM IS PARALLEL WITH THE 10'–0" DIMENSION.
2. CAST ALL FOOTINGS IN PLACE.
3. ANCHOR BOLTS SHALL CONFORM TO ASTM F1554, WITH GRADE AS SPECIFIED BY THE MANUFACTURER.
4. REINFORCING STEEL SHALL CONFORM TO ASTM A615, GRADE 60 FOR DEFORMED BARS OF BILLET STEEL.
5. EACH SPIRAL REBAR UNIT WITHIN EACH FOOTING SHALL HAVE 1–1/2 TURNS OF THE REBAR AT EACH END OF THE UNIT.
6. GALVANIZING OF ANCHOR BOLTS, NUTS, AND WASHERS SHALL CONFORM TO ASTM A153.
7. STEEL ANCHOR PLATES SHALL CONFORM TO ASTM A36.
8. FOUNDATION BASE SHALL HAVE A BROOMED FINISH.
9. REFERENCE TOP BACK OF CURB IN ESTABLISHING FOUNDATION TOP ELEVATION. SET TOP OF FOUNDATION FLUSH WITH SIDEWALK/PAVING FINISH GRADE OR 2"–4" ABOVE FINISH GROUND ELEVATION.
10. SEE NOTE 9, STANDARD DETAIL 80–10

REVISION: 3/13 ADDED GROUNDING DETAIL

MUNICIPALITY OF ANCHORAGE	SCALE: NTS APPROVED: REVISED: 3/13	**POURED CONCRETE SPREAD FOOTING SIGNAL POLE FOUNDATION**	SECTION # 80.04 DETAIL # 80–11

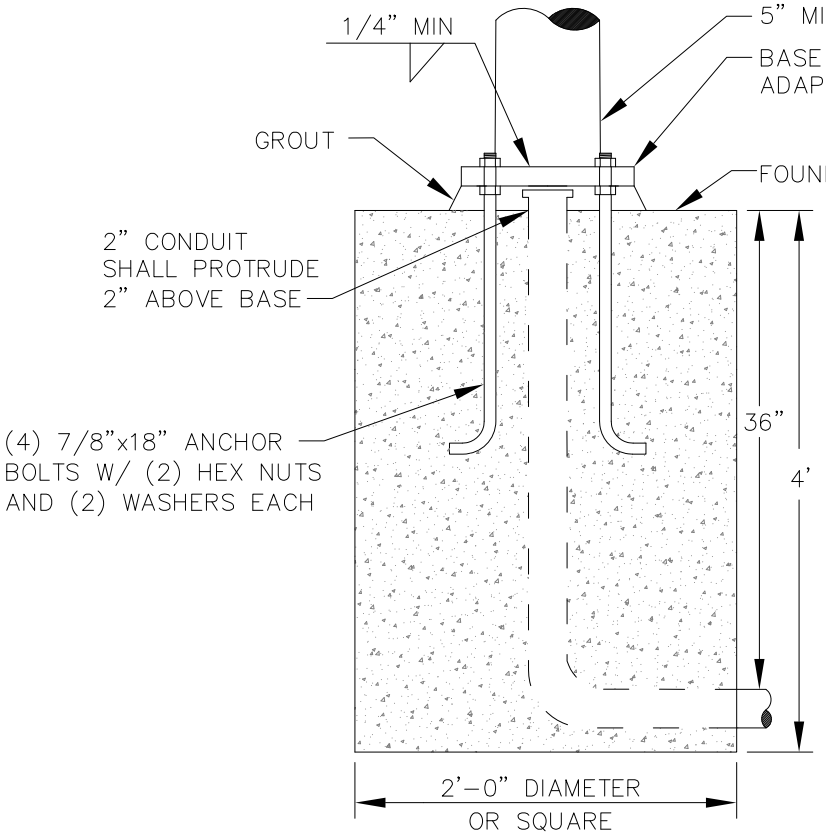

10' PEDESTAL SIGNAL POLE FOUNDATION

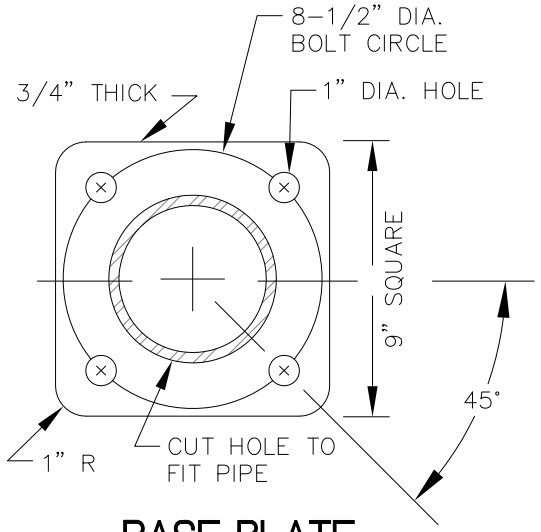

BASE PLATE PLAN VIEW

(BOTH FOUNDATION TYPES)

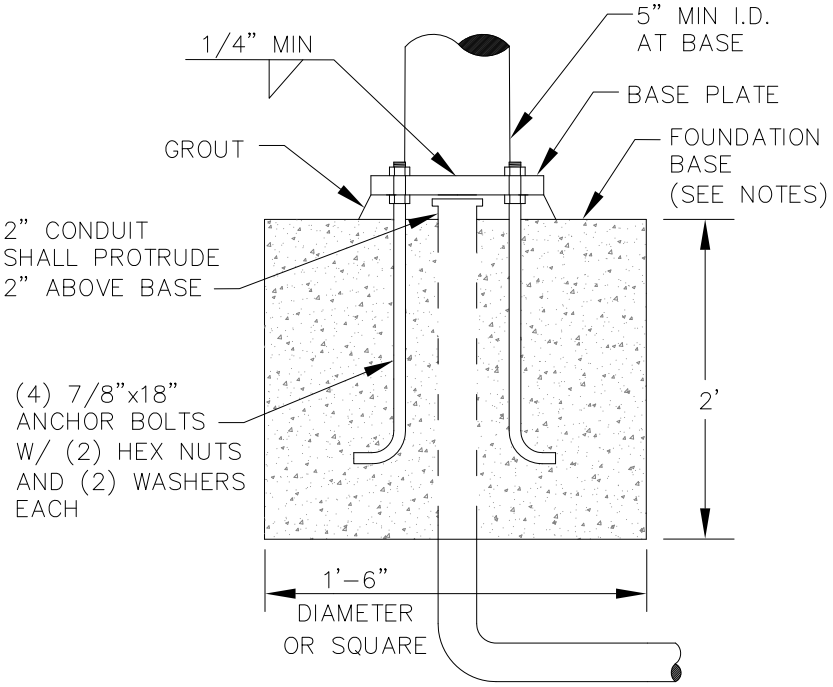

5' PEDESTRIAN PUSH BUTTON FOUNDATION

NOTES:

1. FOUNDATION BASE SHALL HAVE A BROOMED FINISH.
2. REFERENCE TOP BACK OF CURB IN ESTABLISHING FOUNDATION TOP ELEVATION. SET TOP OF FOUNDATION FLUSH WITH SIDEWALK/PAVING FINISH GRADE OR 2"-4" ABOVE FINISH GROUND ELEVATION.
3. IN FOUNDATIONS THAT LACK REINFORCING STEEL CAGES, INSTALL 21 FEET OF COILED #4 AWG, BARE, COPPER WIRE AS THE GROUNDING ELECTRODE. ROUTE THE CONDUCTOR TO PROTRUDE NEAR THE TOP, CENTER OF THE FOUNDATIONS. SLIDE A MINIMUM 6" LONG, PVC OR HDPE, PROTECTIVE SLEEVE OVER THE CONDUCTOR. ALLOW 1" OF THE SLEEVE AND 24" OF CONDUCTOR TO PROTRUDE FROM THE FOUNDATIONS.

REVISION: 1/13 ADDED NOTE 3 & UPDATED NOTE REFERENCES

MUNICIPALITY OF ANCHORAGE	SCALE: NTS APPROVED: REVISED: 1/13	CONCRETE FOUNDATIONS FOR SIGNAL PEDESTAL POLE AND PEDESTRIAN PUSH BUTTON POLE	SECTION # 80.04, 80.05 DETAIL # 80-12

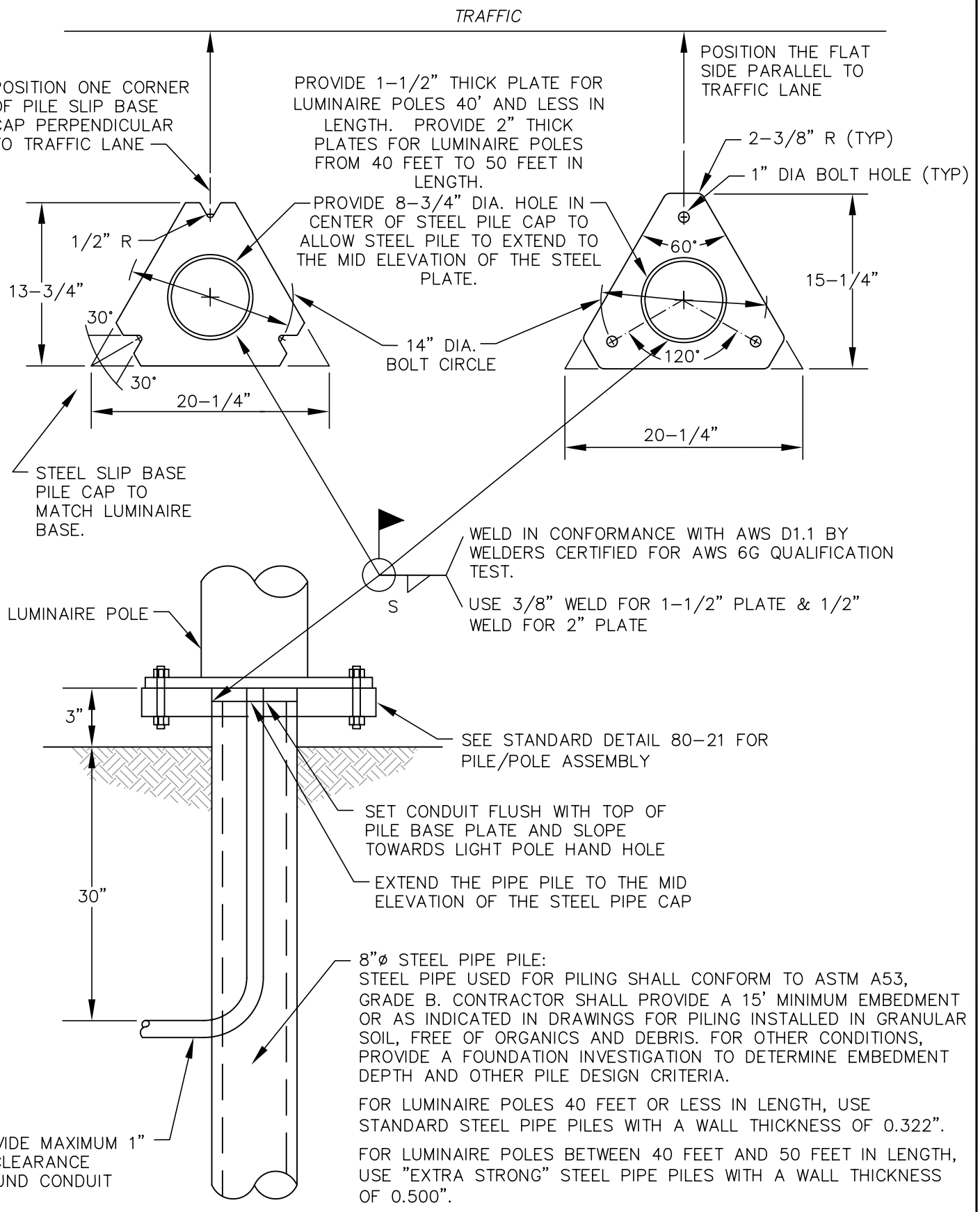

REVISION: 12/09 ADDED FIXED BASE SPECIFICATIONS

MUNICIPALITY OF ANCHORAGE	SCALE: NTS APPROVED: REVISED: 12/09	# DRIVEN STEEL PILE LIGHT POLE FOUNDATION	SECTION # 80.04 DETAIL # 80–13

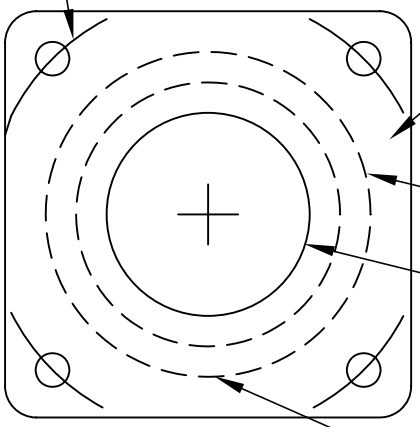

STEEL PLATE SIZED TO MATCH SIGNAL POLE BASE ABOVE. PROVIDE 2–3/4" THICK, ASTM A36 STEEL PLATE.

STEEL PIPE PILE BELOW

10"ø HOLE FOR CONDUITS

PLAN VIEW

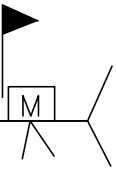

COMPLETE PENETRATION WELD IN CONFORMANCE WITH AWS D1.1 BY WELDERS CERTIFIED FOR AWS 6G QUALIFICATION TEST

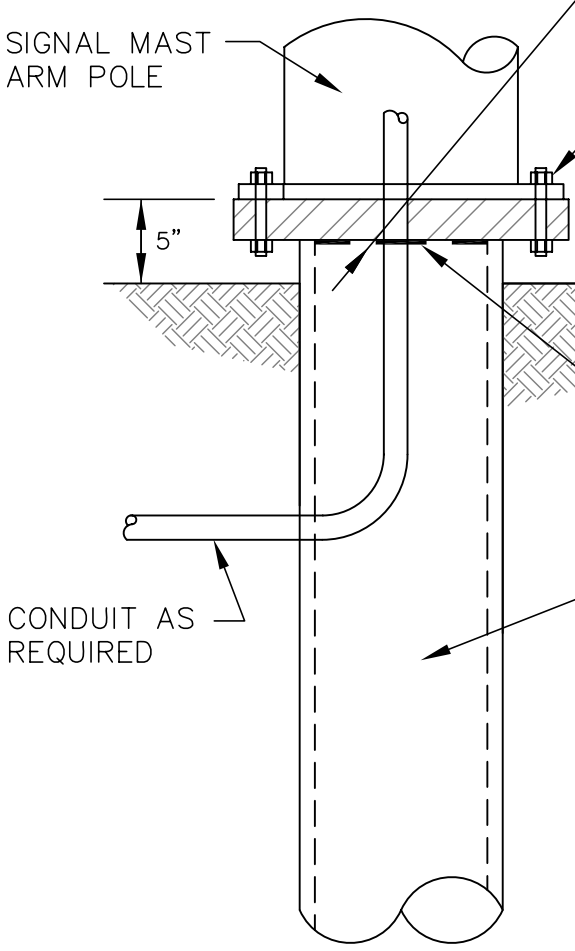

2" x 12" GALVANIZED ALL THREAD STEEL RODS, WITH A NUT AND WASHER ON EACH END OF THE BOLT. STEEL SHALL CONFORM TO ASTM F1554, WITH GRADE AS DETERMINED BY THE POLE MANUFACTURER.

SEE PLAN DETAIL ABOVE FOR STEEL PLATE PILE CAP DETAIL

18"ø STEEL PIPE PILE (1/2" WALL THICKNESS)

SECTION

NOTES:

STEEL PIPE USED FOR PILING SHALL CONFORM TO ASTM A53, GRADE B. PROVIDE A 25' MINIMUM EMBEDMENT OR AS INDICATED IN CONTRACT DOCUMENTS FOR PILING INSTALLED IN GRANULAR SOIL, FREE OF ORGANICS AND DEBRIS. FOR OTHER CONDITIONS, PROVIDE A FOUNDATION INVESTIGATION TO DETERMINE EMBEDMENT DEPTH AND OTHER PILE DESIGN CRITERIA.

MUNICIPALITY OF ANCHORAGE	SCALE: NTS APPROVED: REVISED: 10/07	**DRIVEN STEEL PILE SIGNAL POLE FOUNDATION**	SECTION # 80.04 DETAIL # 80–14

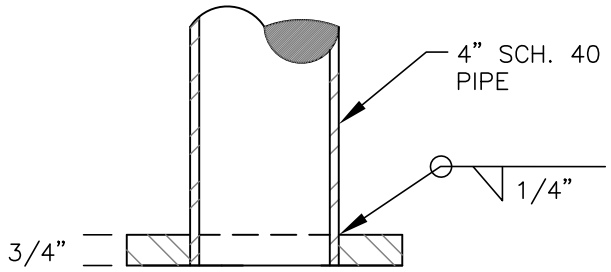

BASE PLATE DETAILS

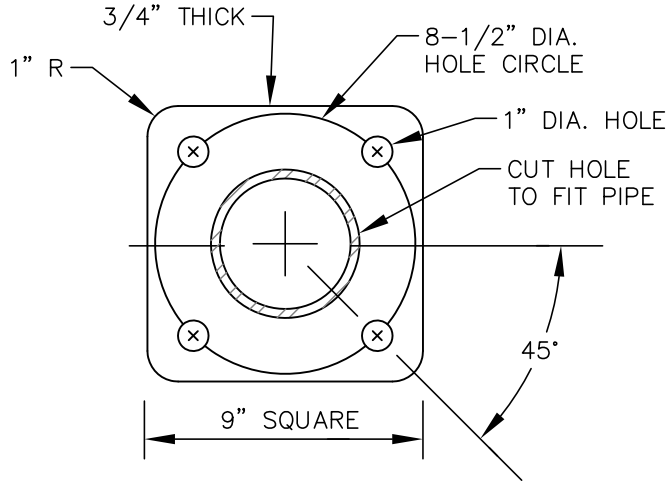

PLAN VIEW

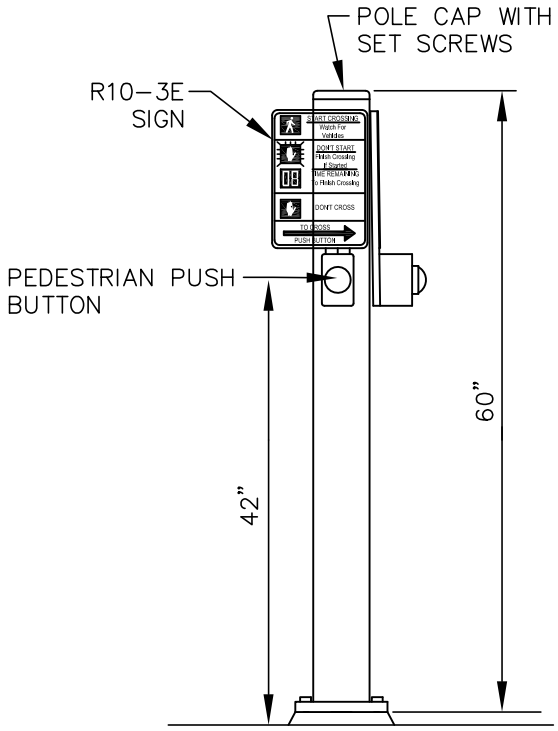

POLE DETAIL

NOTES:

1. SEE DETAIL 80-12 FOR FOUNDATION.
2. SEE DETAIL 80-28 FOR PEDESTRIAN PUSH BUTTON.

REVISION: 2/2012 REMOVED "H" STYLE HOUSING UPDATED POLE DETAIL.

MUNICIPALITY OF ANCHORAGE	SCALE: NTS APPROVED: REVISED: 2/12	**PEDESTRIAN PUSH BUTTON POLE**	SECTION # 80.05 DETAIL # 80-15

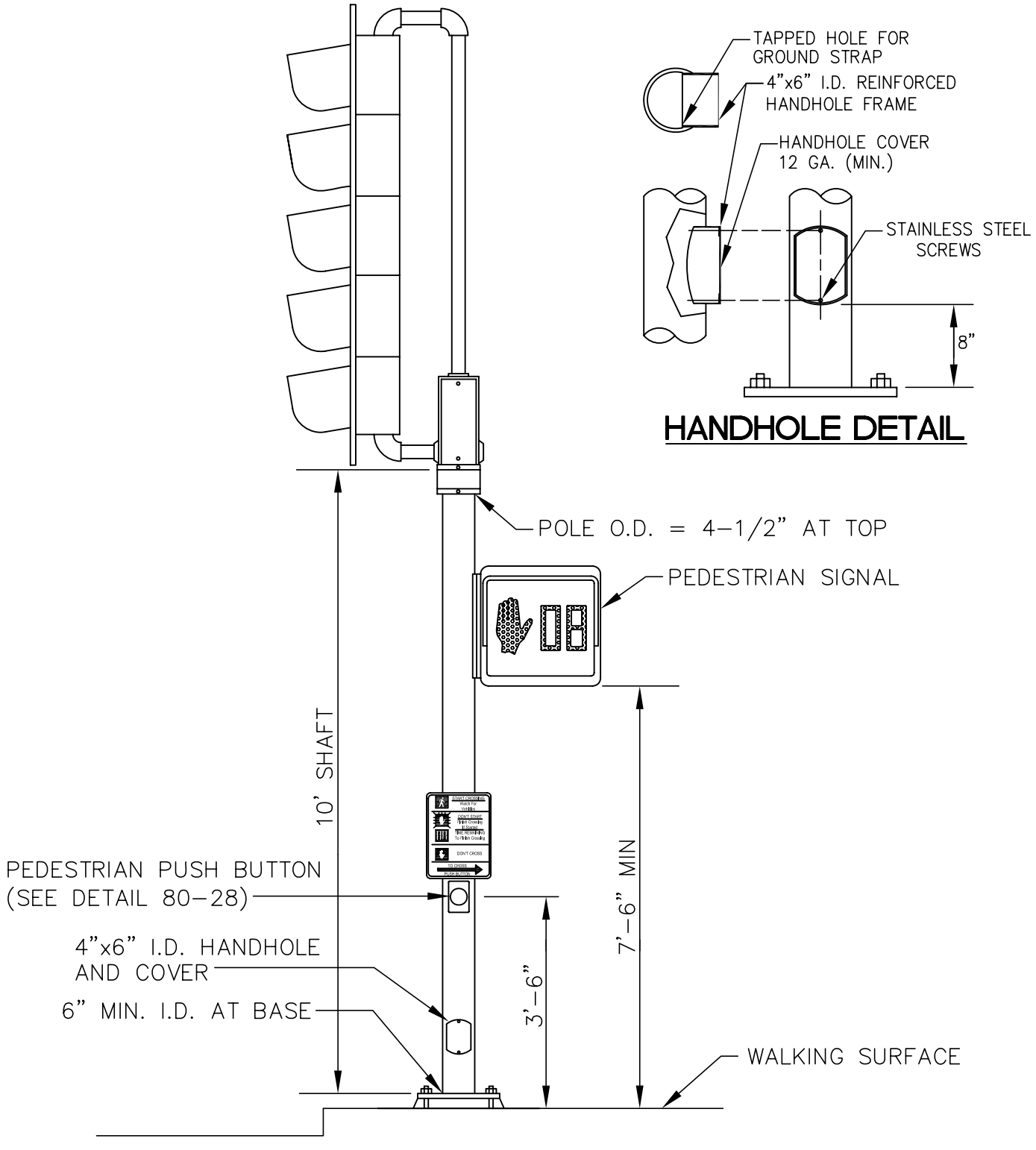

NOTES:

1. SEE DETAIL 80-17 FOR SLIP BASE AND ADAPTER.
2. SEE DETAIL 80-12 FOR FLANGE TYPE BASE PLATE.
3. SEE DETAIL 80-12 FOR CONCRETE FOUNDATION.

MUNICIPALITY OF ANCHORAGE	SCALE: NTS APPROVED: REVISED: 5/08	SIGNAL PEDESTAL POLE	SECTION # 80.05 DETAIL # 80-16

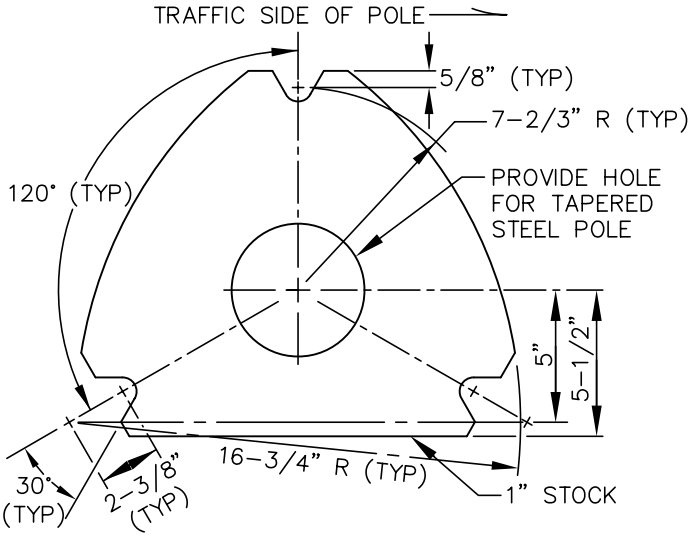

TOP SLIP BASE PLATE

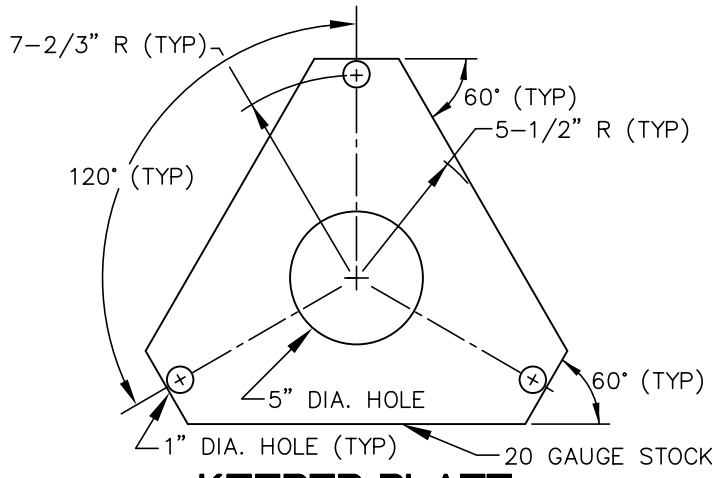

KEEPER PLATE

(SEE DETAIL 80-12 FOR FOUNDATION)

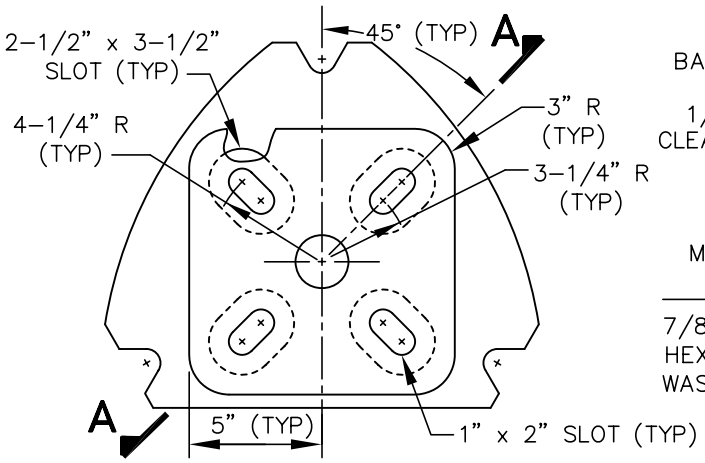

BOTTOM SLIP BASE PLATE

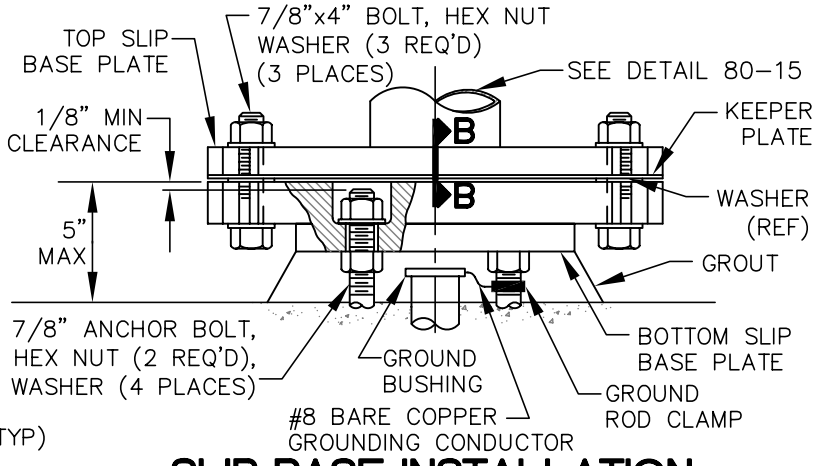

SLIP BASE INSTALLATION

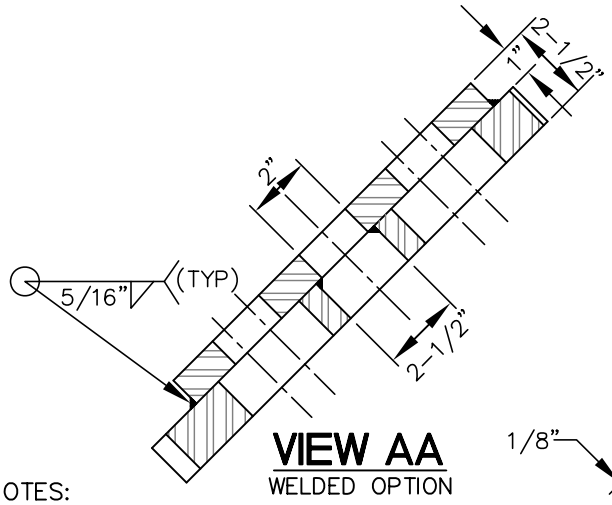

VIEW AA
WELDED OPTION

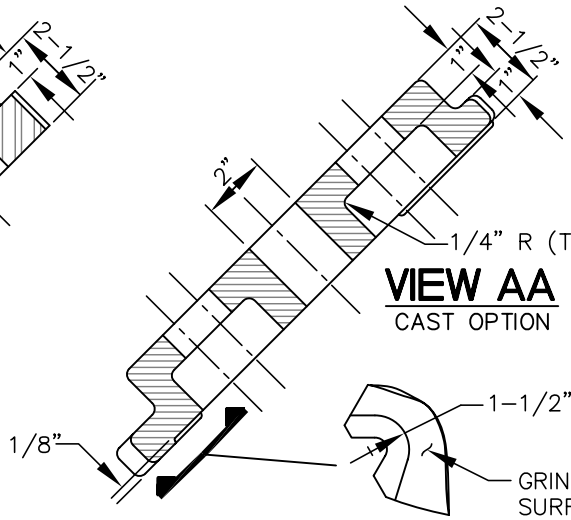

VIEW AA
CAST OPTION

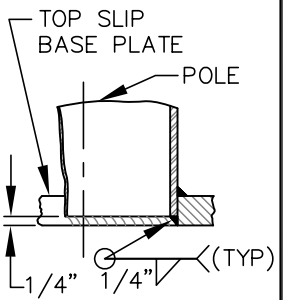

VIEW BB

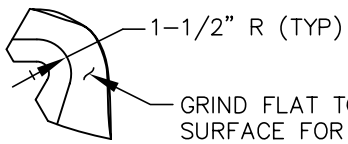

NOTES:

1. TORQUE 7/8" H.S. SLIP BASE PLATE BOLTS TO 800 INCH-LBS.
2. PLATES SHALL CONFORM TO ASTM A36.
3. CAST OPTION SHALL CONFORM TO ASTM A486, CLASS 90.
4. KEEPER PLATE SHALL CONFORM TO ASTM A446, GRADE A.
5. ALL WELDS SHALL CONFORM TO AMERICAN WELDING SOCIETY SPECIFICATIONS.
6. SEE STANDARD DETAIL 80-12 FOR BOLT HOLE CIRCLE PATTERN.

MUNICIPALITY OF ANCHORAGE	SCALE: NTS APPROVED: REVISED: 7/08	PEDESTAL SIGNAL POLE SLIP-BASE AND ADAPTER DETAIL	SECTION # 80.05 DETAIL # 80-17

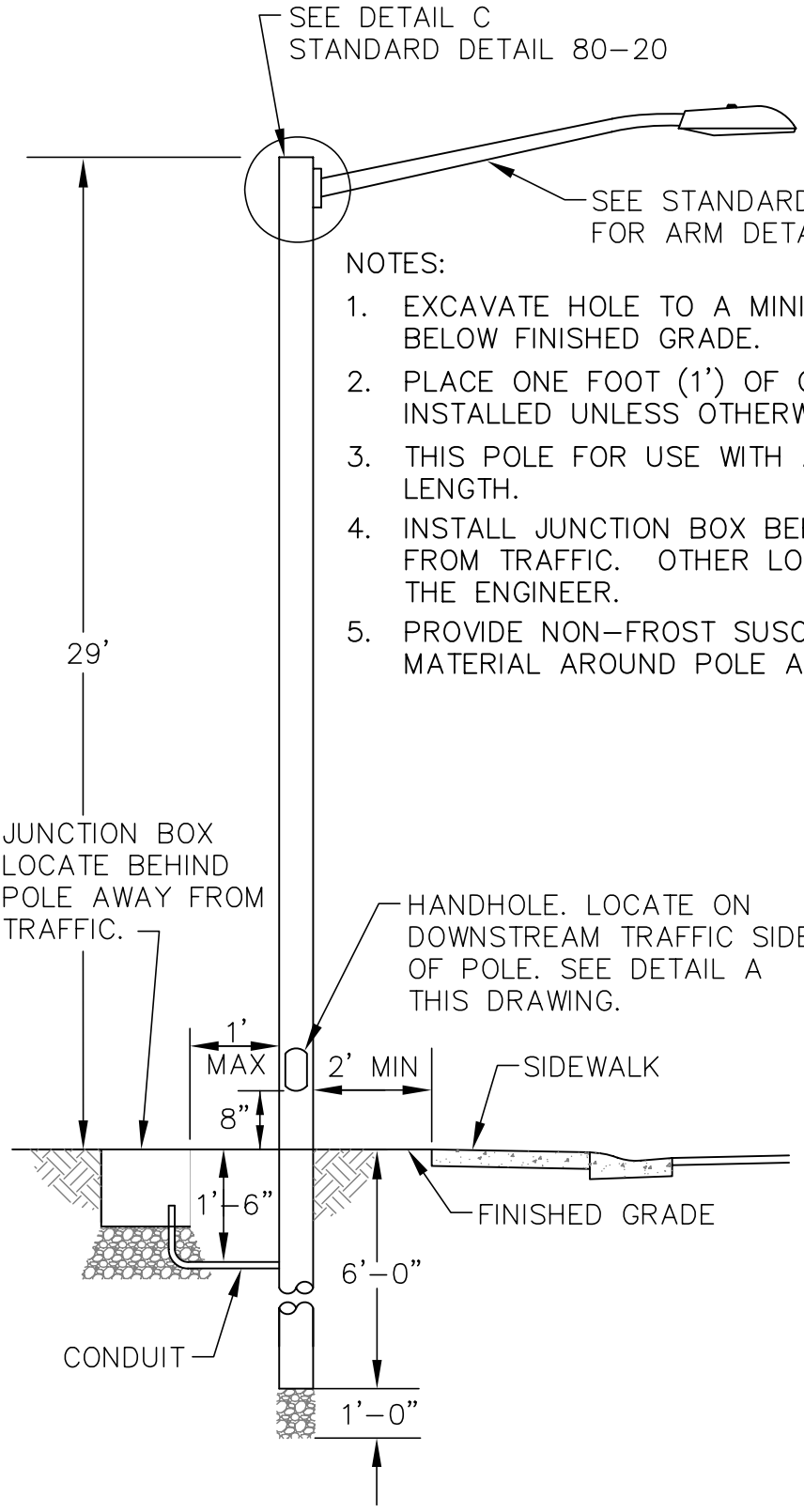

NOTES:

1. EXCAVATE HOLE TO A MINIMUM DEPTH OF 7'–0" BELOW FINISHED GRADE.
2. PLACE ONE FOOT (1') OF COARSE ROCK BEDDING, INSTALLED UNLESS OTHERWISE SPECIFIED.
3. THIS POLE FOR USE WITH ARMS OF 8'–0" MAXIMUM LENGTH.
4. INSTALL JUNCTION BOX BEHIND LIGHT POLE AWAY FROM TRAFFIC. OTHER LOCATIONS AS DIRECTED BY THE ENGINEER.
5. PROVIDE NON–FROST SUSCEPTIBLE COMPACTED MATERIAL AROUND POLE AS REQUIRED.

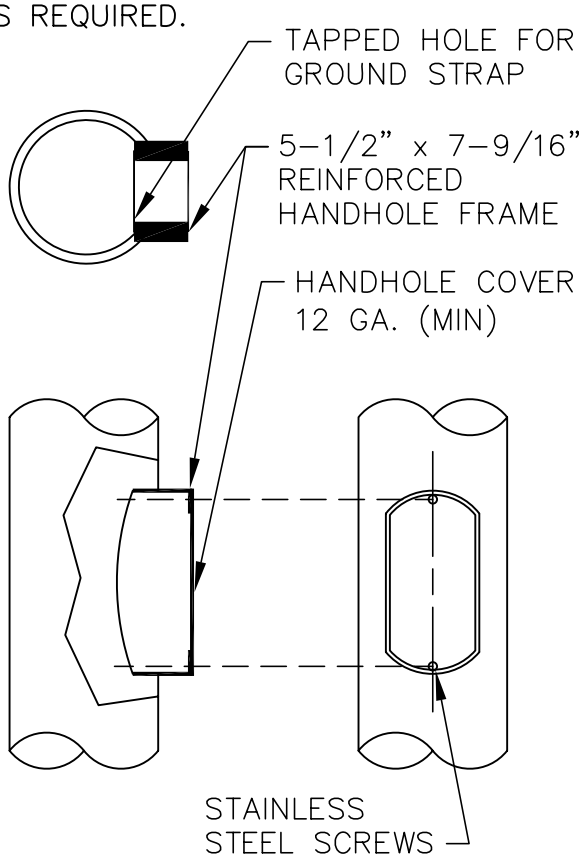

DETAIL A

MUNICIPALITY OF ANCHORAGE	SCALE: NTS APPROVED: REVISED: 10/08	# DIRECT IMBEDDED LUMINAIRE POLE	SECTION # 80.08 DETAIL # 80–18

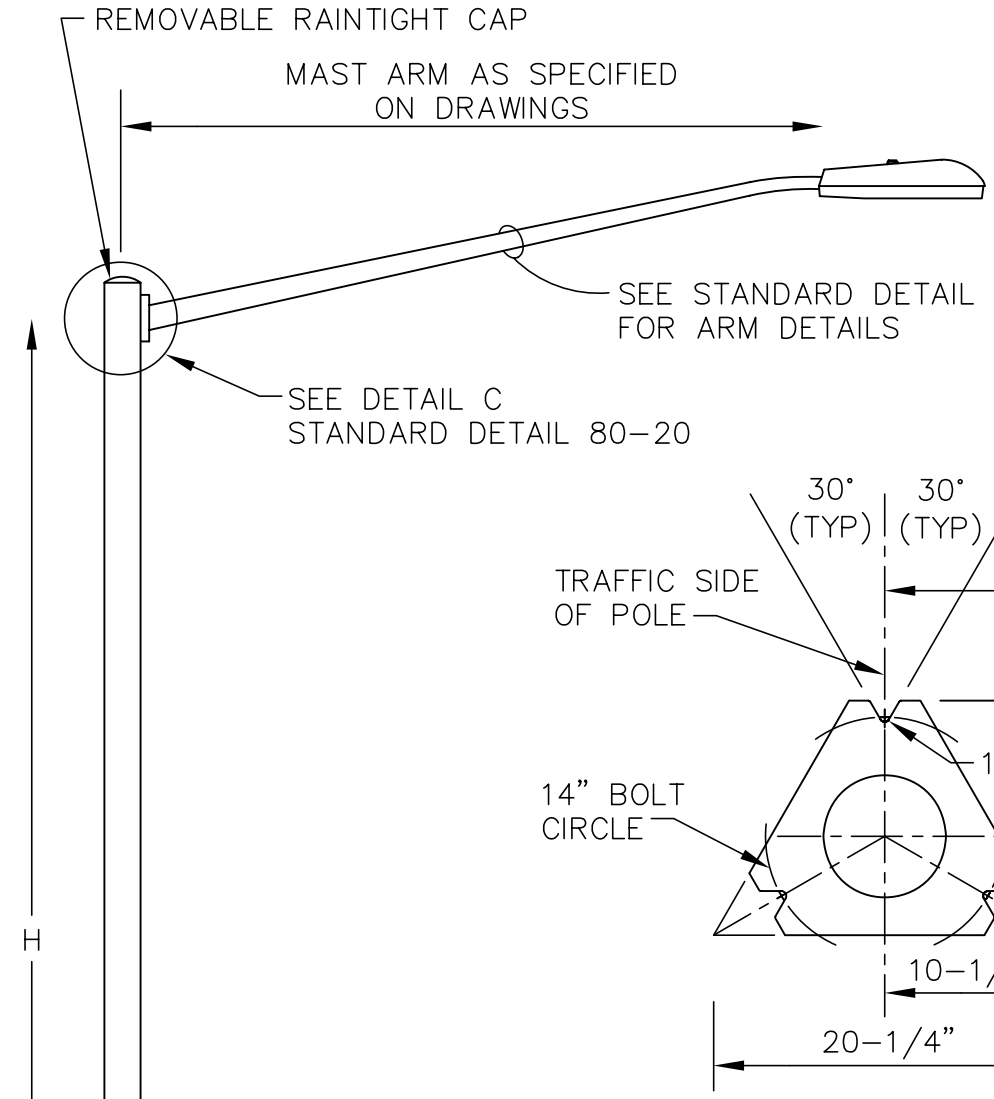

DETAIL B

HANDHOLE. LOCATE ON DOWNSTREAM TRAFFIC SIDE OF POLE. SEE DETAIL A, STANDARD DETAIL 80-18

SEE DETAIL B THIS DRAWING STANDARD DETAIL 80-21 & 80-22

LUMINAIRE POLE DATA			
POLE LENGTH (H)	O.D. (MIN.)		U.S.S.
	BASE	TOP	GAGE
25' to 30'	8"	3-7/8"	10
+30' to 35'	8-3/4"	3-7/8"	10
+35' to 40'	9"	3-7/8"	10
+40' to 45'	9-1/2"	3-7/8"	10
+45' to 50'	10"	3-7/8"	10

MUNICIPALITY OF ANCHORAGE

SCALE: NTS

APPROVED:

REVISED: 7/08

FLANGE-MOUNTED LUMINAIRE POLE

SECTION # 80.05

DETAIL # 80-19

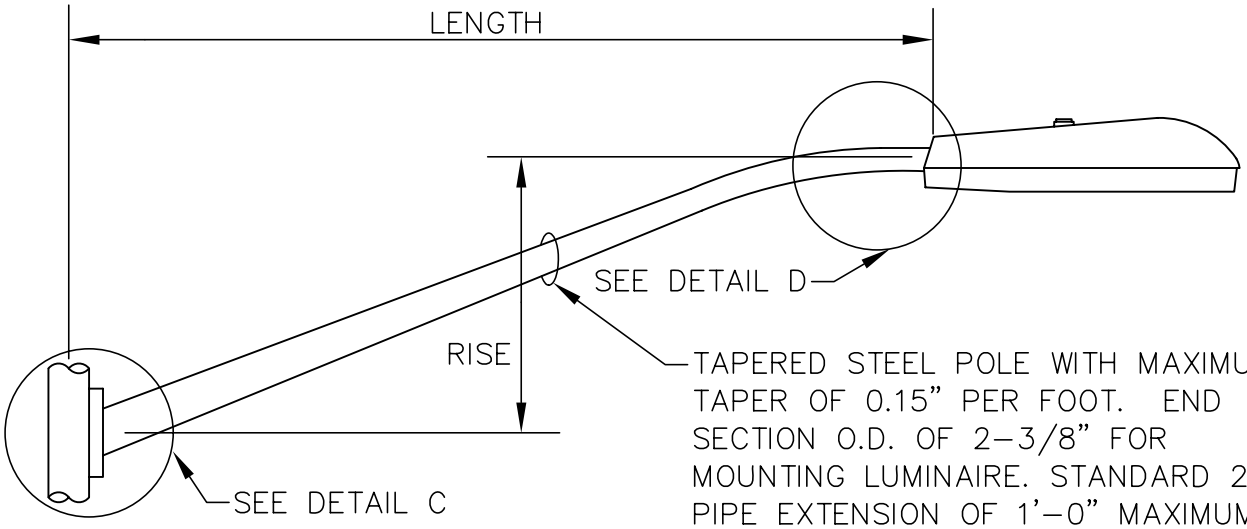

TAPERED STEEL POLE WITH MAXIMUM TAPER OF 0.15" PER FOOT. END SECTION O.D. OF 2–3/8" FOR MOUNTING LUMINAIRE. STANDARD 2" PIPE EXTENSION OF 1'–0" MAXIMUM FOR 6'–10' ARMS AND 3'–0" MAXIMUM FOR 12'–15' ARMS MAY BE USED.

LUMINAIRE ARM DETAIL

LENGTH	RISE
6'	1.5'
8'	2.2'
10'	2.5'
12'	3.6'
15'	4.3'
22'	6.0'

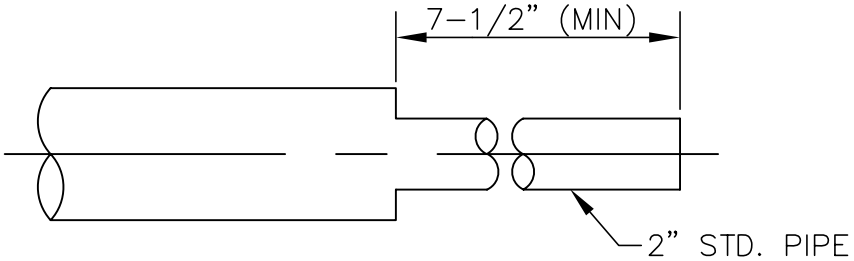

DETAIL D

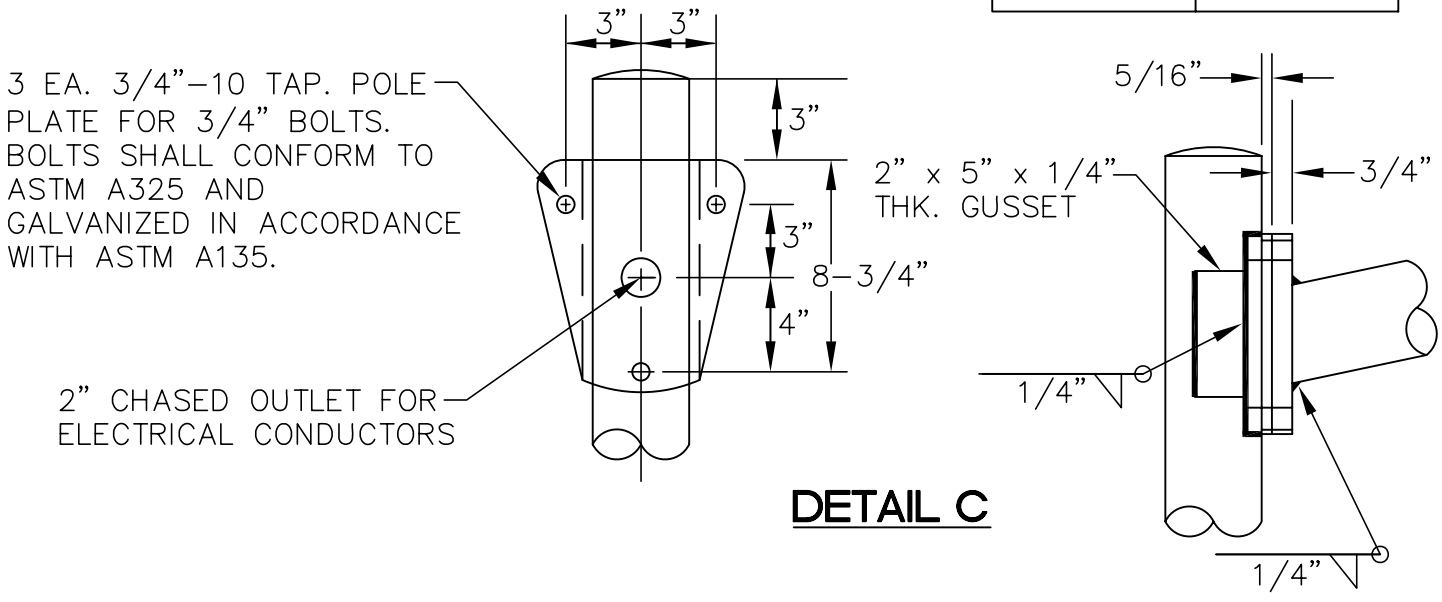

DETAIL C

MUNICIPALITY OF ANCHORAGE	SCALE: NTS APPROVED: REVISED: 7/08	LUMINAIRE ARM DETAIL	SECTION # 80.05 DETAIL # 80–20

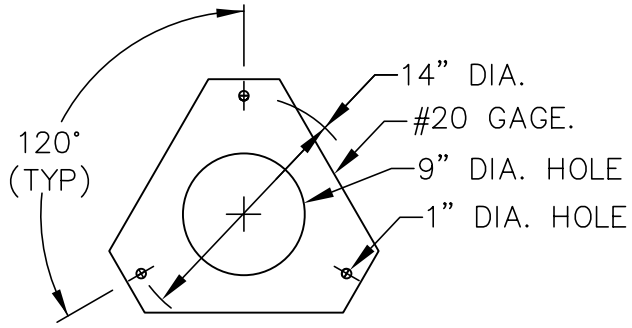

KEEPER PLATE

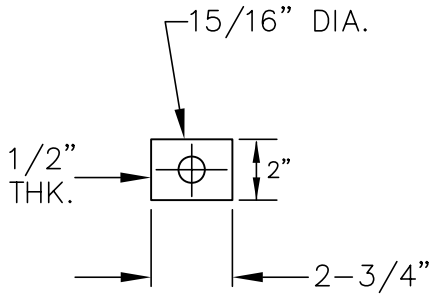

PLATE WASHER

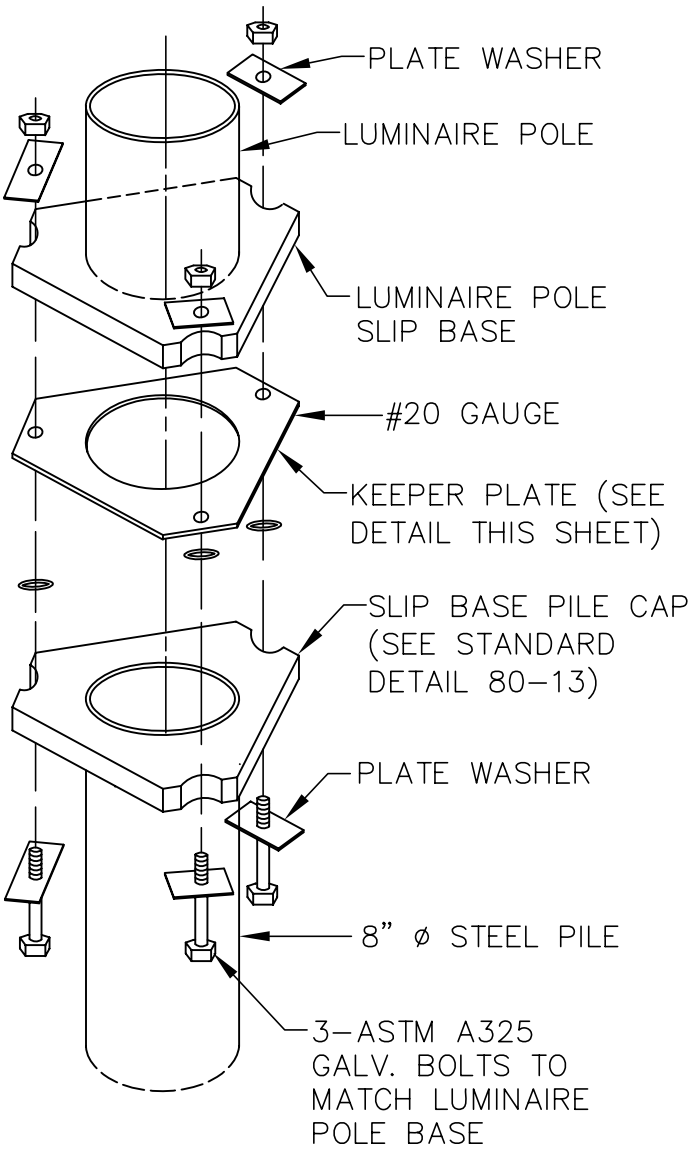

SLIP BASE ASSEMBLY

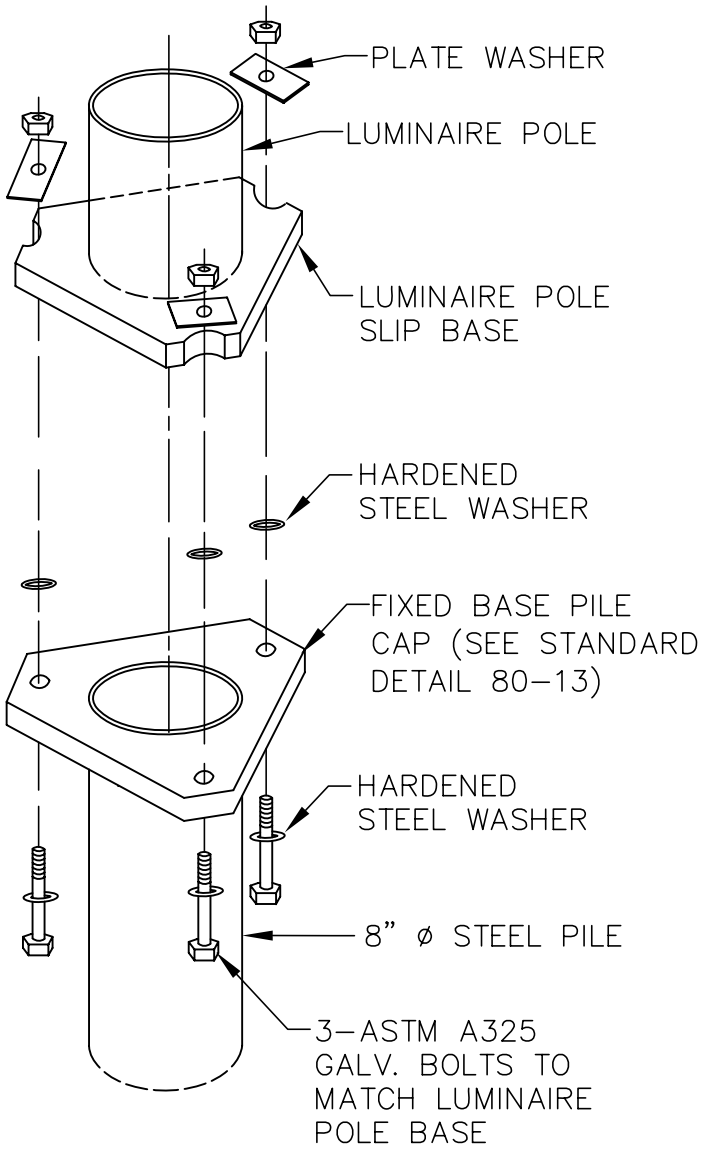

FIXED BASE ASSEMBLY

REVISION: 12/09 ADDED FIXED BASE SPECIFICATIONS

MUNICIPALITY OF ANCHORAGE	SCALE: NTS APPROVED: REVISED: 12/09	**DRIVEN STEEL PIPE POLE ASSEMBLIES**	SECTION # 80.04 DETAIL # 80-21

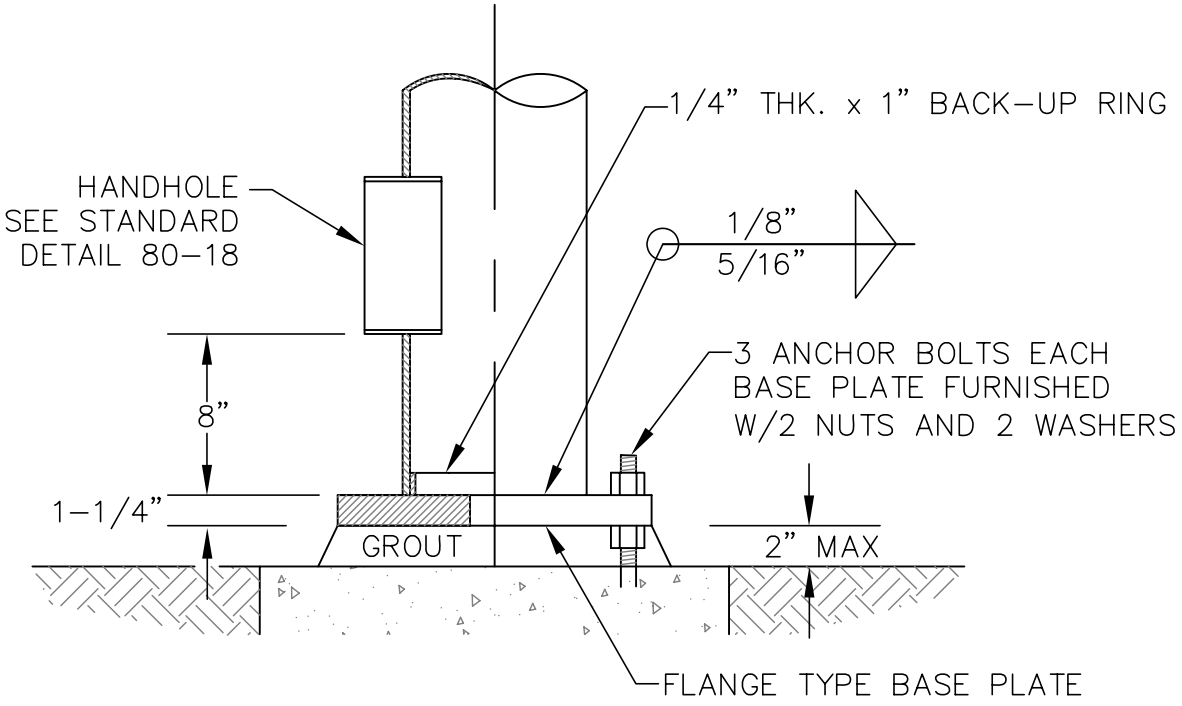

MUNICIPALITY OF ANCHORAGE	SCALE: NTS APPROVED: REVISED: 7/08	**FLANGE-MOUNTED DETAIL FOR CONCRETE LUMINAIRE BASE**	SECTION # 80.05 DETAIL # 80-22

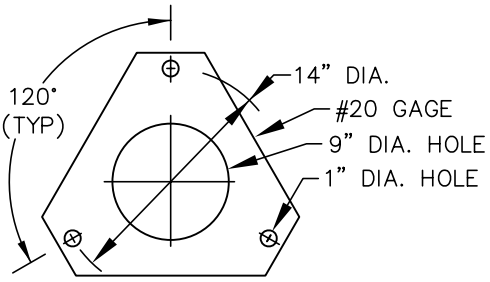

KEEPER PLATE

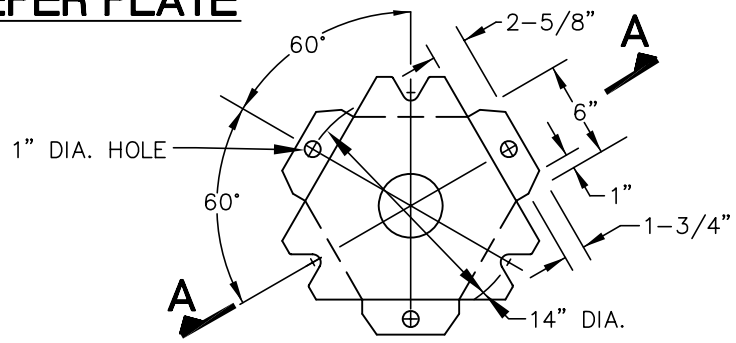

BOTTOM SLIP BASE PLATE

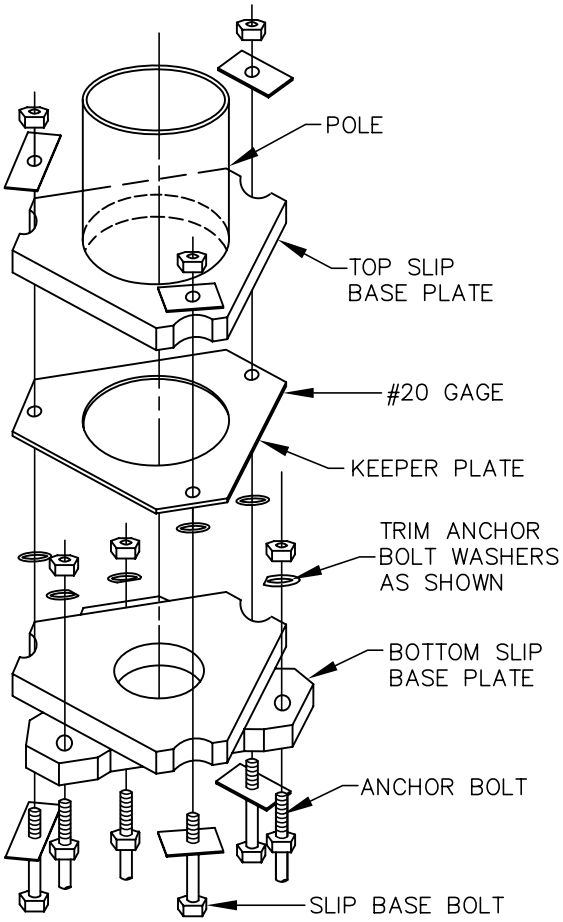

SLIP BASE ASSEMBLY

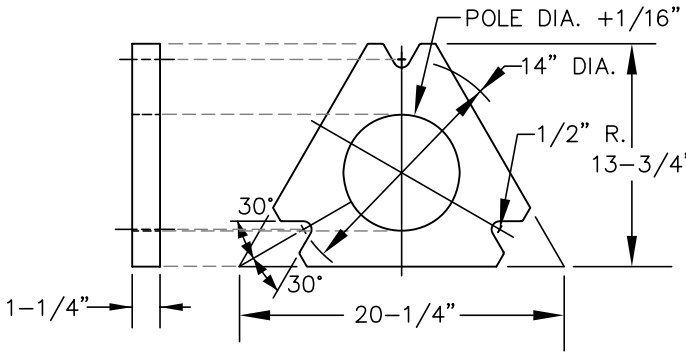

TOP SLIP BASE PLATE

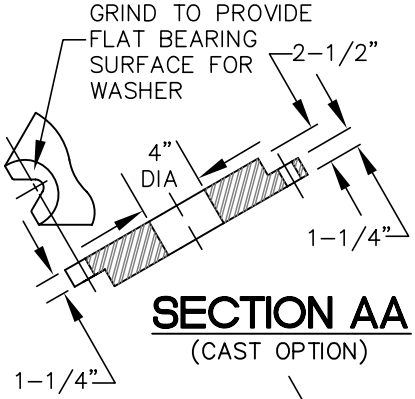

SECTION AA
(CAST OPTION)

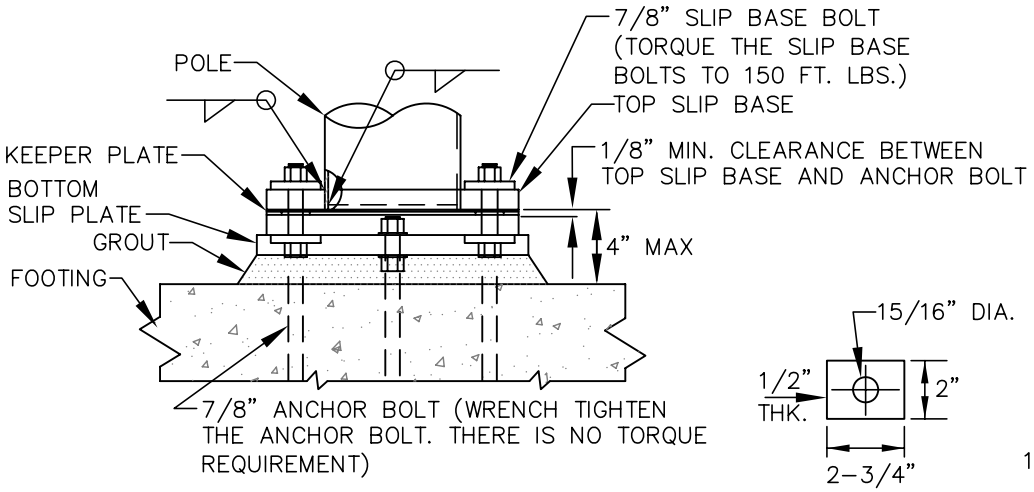

SLIP BASE INSTALLATION

PLATE WASHER

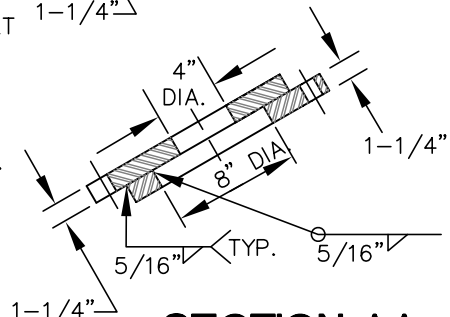

SECTION AA
(WELDED OPTION)

MUNICIPALITY OF ANCHORAGE	SCALE: NTS APPROVED: REVISED: 7/08	CONCRETE LUMINAIRE BASE SLIP-BASE DETAIL	SECTION # 80.05 DETAIL # 80-23

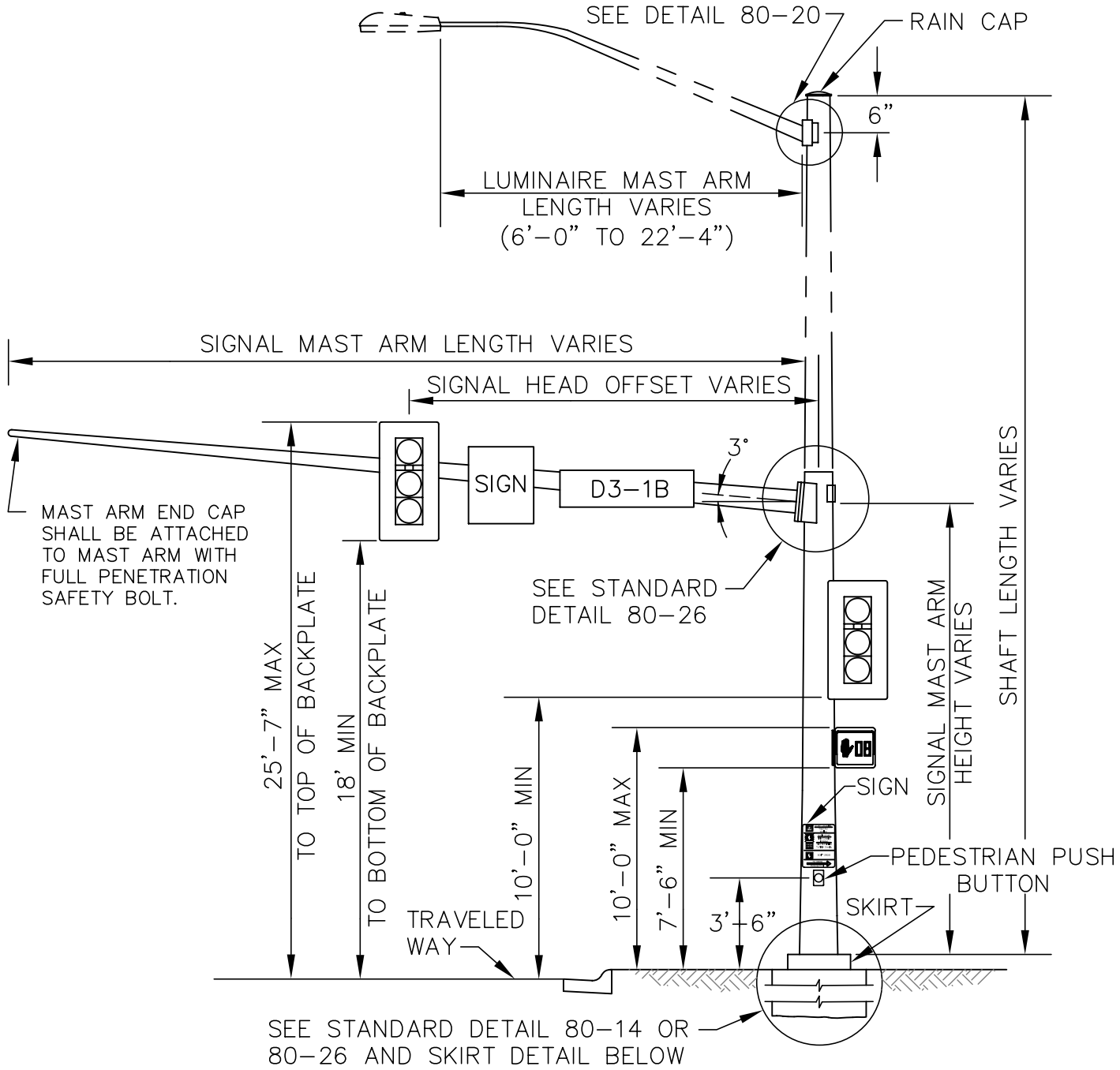

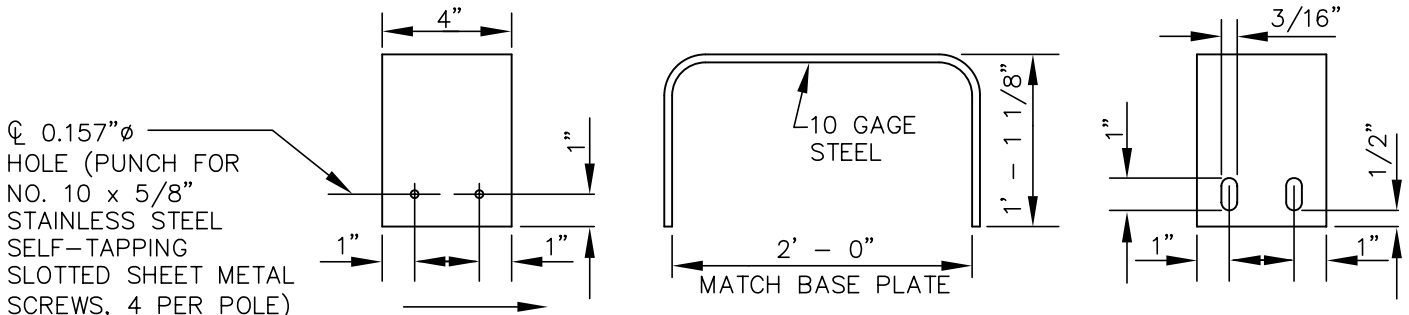

SKIRT DETAILS

(TWO REQUIRED PER POLE)

MUNICIPALITY OF ANCHORAGE	SCALE: NTS APPROVED: REVISED: 8/08	**SIGNAL MAST ARM POLE AND COMBINATION SIGNAL/LUMINAIRE POLE**	SECTION # 80.05 DETAIL # 80-24

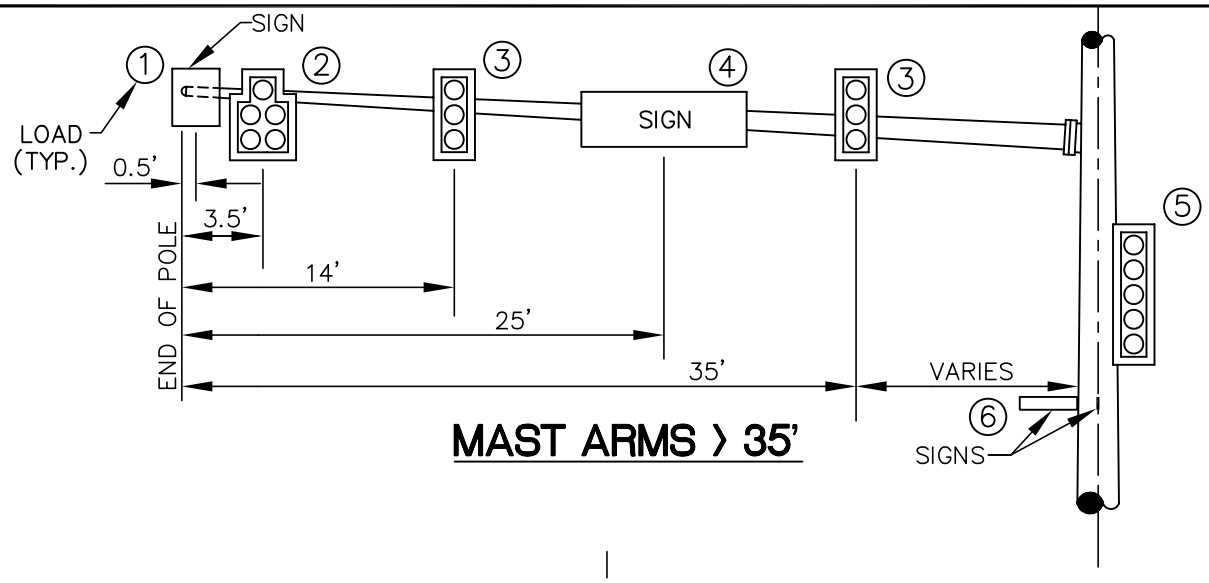

MAST ARMS ⟩ 35'

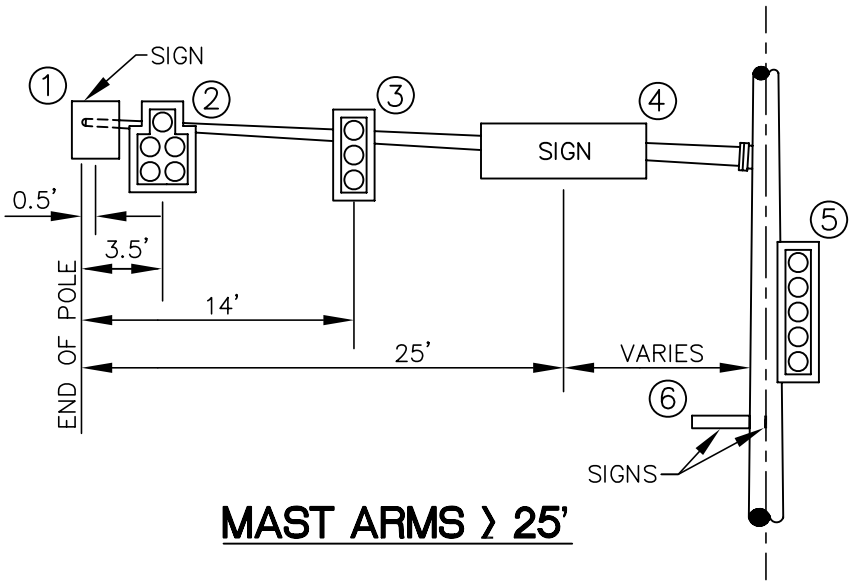

MAST ARMS ⟩ 25'

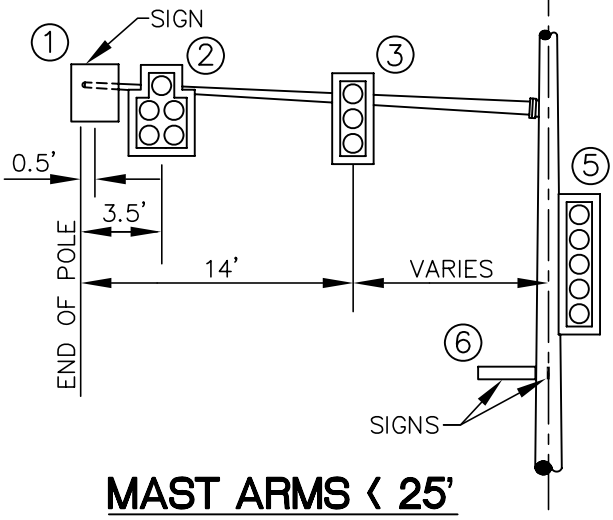

MAST ARMS ⟨ 25'

MINIMUM DESIGN LOADING TABLE

LOAD #	DESCRIPTION	WEIGHT (LBS)	PROJECTED AREA (FT^2)
1	SIGN	65	7.5
2	SIGNAL	80	14.7
3	SIGNAL	60	8.7
4	SIGN	80	26
5	SIGNAL	125	7.6
6	STREET NAME SIGN		2.0

NOTES:
1. LOAD #5 SHALL BE SHAFT MOUNTED 14 FEET FROM THE BASE OF THE POLE.
2. LOAD #6 IS SHAFT MOUNTED 12 FEET FROM THE BASE OF THE POLE.

MUNICIPALITY OF ANCHORAGE	SCALE: NTS APPROVED: REVISED: 10/08	**SIGNAL MAST ARM / POLE DESIGN LOADING**	SECTION # 80.05 DETAIL # 80–25

MAST ARM DATA TABLE

MAST ARM LENGTH	BOLT CIRCLE
≤ 15'	12–1/2"
16' to 26'	13–1/2"
27' to 39'	15"
40' to 45'	15–1/2"
46' to 55'	18–1/2"
55' to 65'	19"

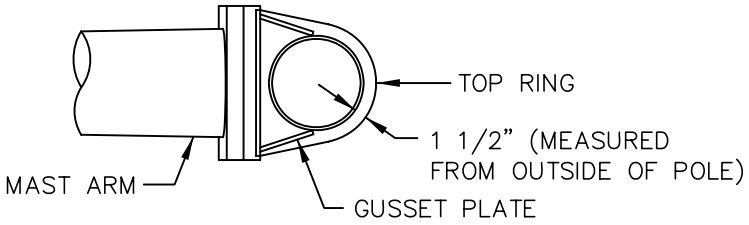

PLAN VIEW OF MAST ARM

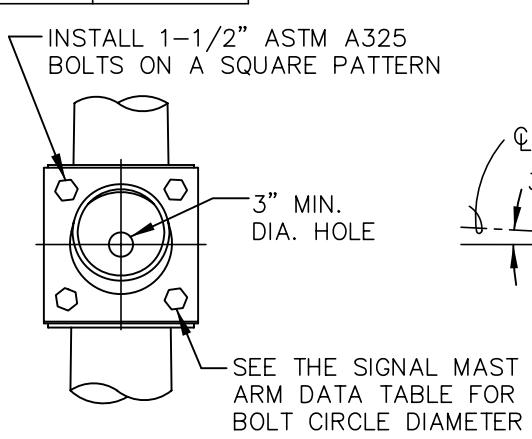

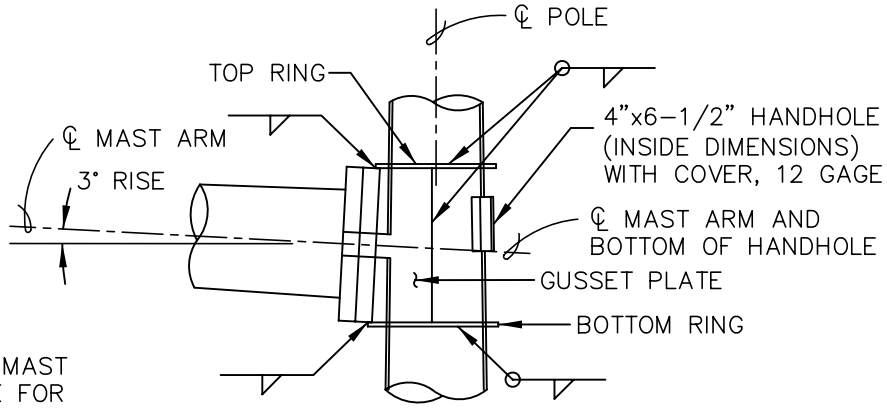

MAST ARM CONNECTION DETAILS

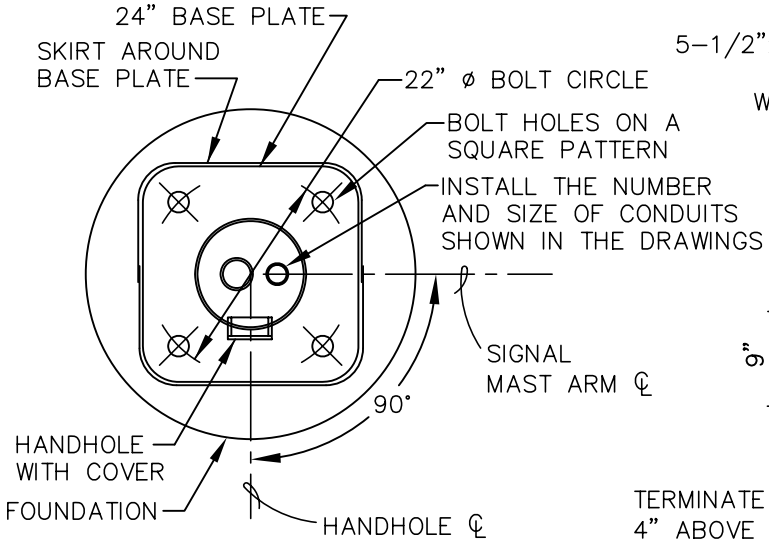

PLAN VIEW

(SHOWN WITHOUT ANCHOR BOLTS AND NUTS FOR CLARITY)

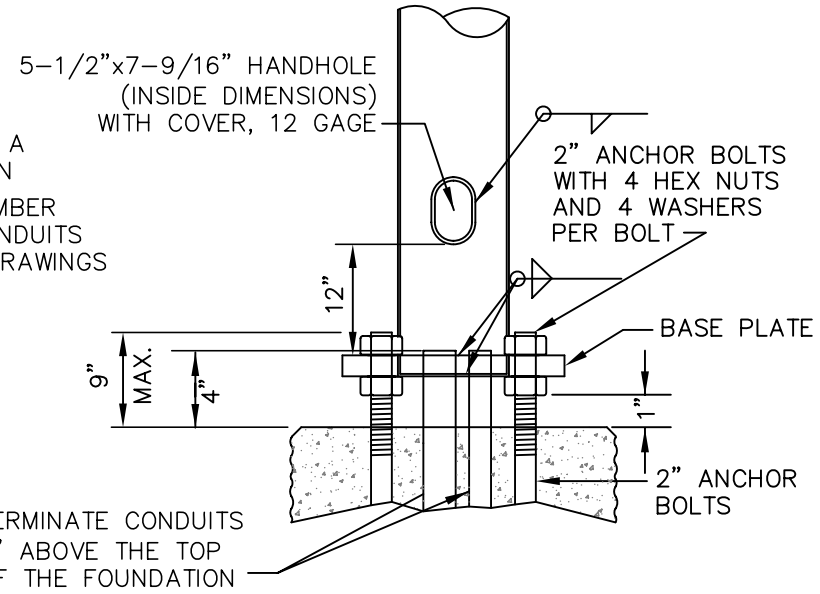

POLE BASE DETAIL

(SEE DETAIL 80–14 FOR DRIVEN STEEL PILE SIGNAL POLE FOUNDATION)

NOTES:

1. SEE STANDARD DETAIL 80–24 FOR SIGNAL MAST ARM POLE AND SKIRT DETAILS.
2. SEE STANDARD DETAILS 80–10, 80–11 & 80–14 FOR FOUNDATION DETAILS.

MUNICIPALITY OF ANCHORAGE	SCALE: NTS APPROVED: REVISED: 6/08	DETAILS-SIGNAL MAST ARM POLE AND SIGNAL / LUMINAIRE POLE	SECTION # 80.05,06 DETAIL # 80–26

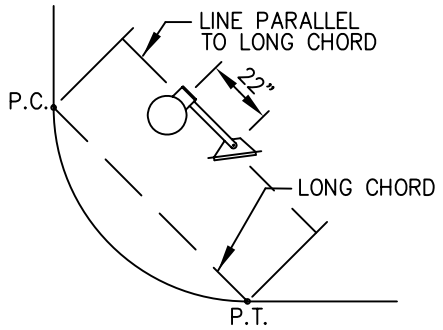

PLAN VIEW

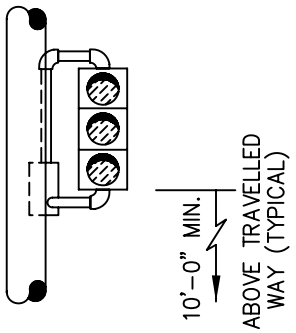

USE A ONE WAY, L.O.D. FRAME FOR INSTALLING ONE FACE

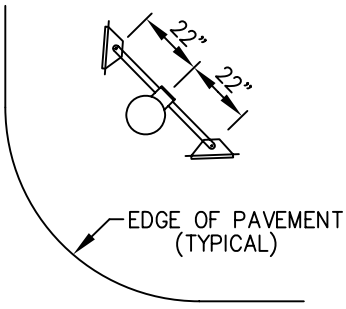

PLAN VIEW

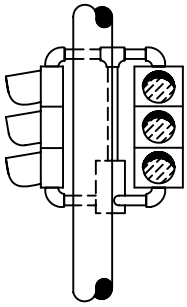

USE A TWO WAY FRAME FOR INSTALLING TWO FACES

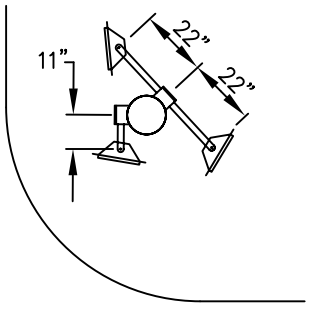

PLAN VIEW

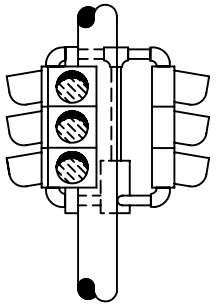

USE TWO FRAMES FOR INSTALLING THREE FACES: A TWO WAY AND A ONE WAY R.O.D.

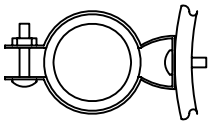

TOP VIEW

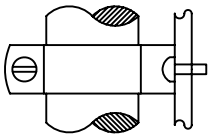

SIDE VIEW

CONDUIT HANGER CLAMP

BOLTED TO THE SIGNAL POLE, 6" TO 12" BELOW THE TOP MOST 90° BEND

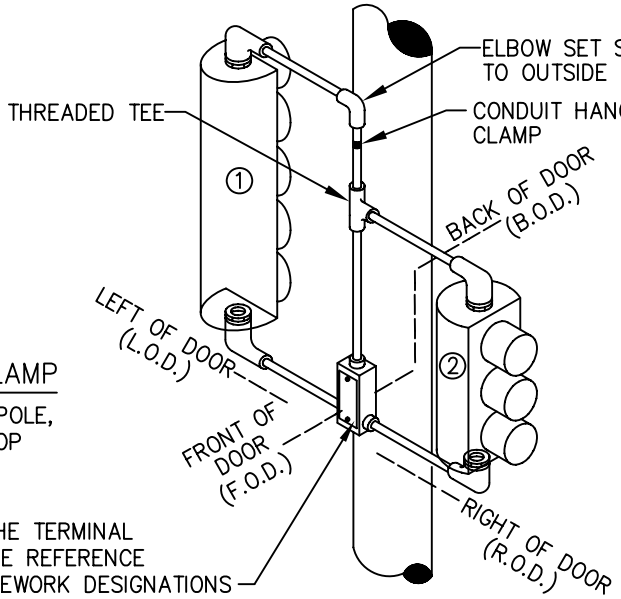

FRAMEWORK DESCRIPTION

HEAD NO. 1 OFFSET L.O.D.
HEAD NO. 2 OFFSET R.O.D.

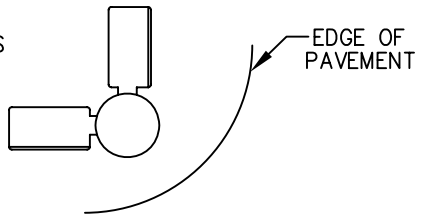

PLAN VIEW

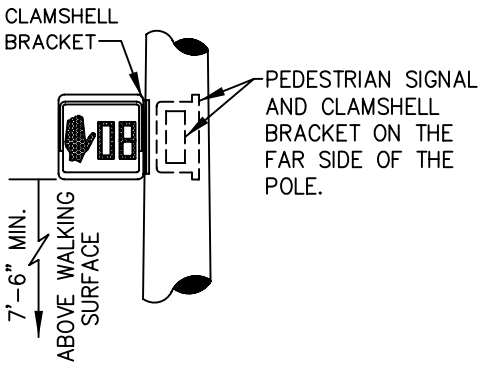

PEDESTRIAN SIGNAL

NOTE: SHOWN WITHOUT BACKPLATES

MUNICIPALITY OF ANCHORAGE	SCALE: NTS APPROVED: REVISED: 10/07	**SIDE-MOUNTED SIGNAL DETAILS**	SECTION # 80.19 DETAIL # 80-27

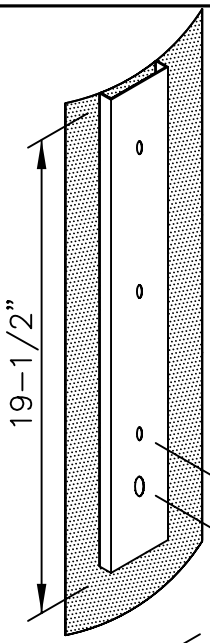

NOTE:
TAP TOP AND BOTTOM SIGN ATTACHMENT WITH STAINLESS STEEL BOLTS INTO THE POLE.

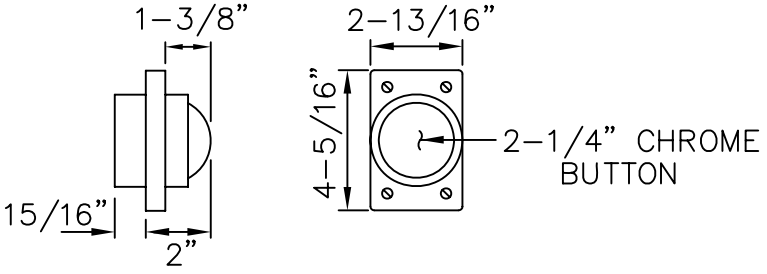

PEDESTRIAN PUSH BUTTON SWITCH

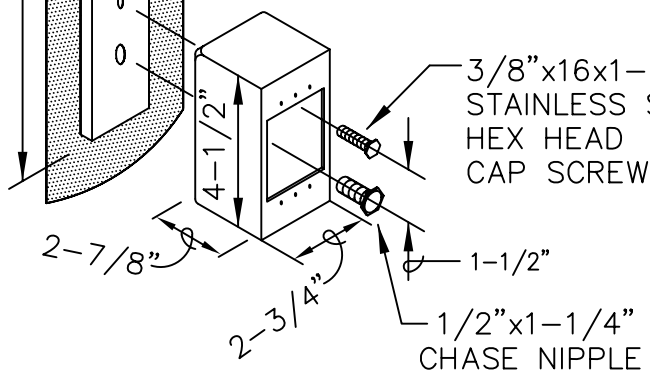

PEDESTRIAN BUTTON HOUSING DETAIL

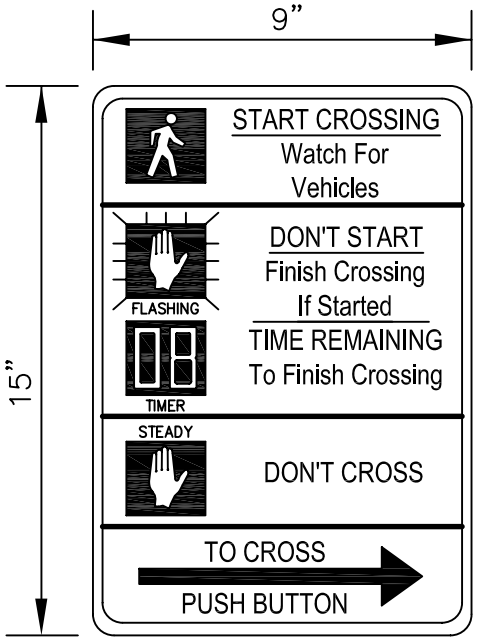

R10-3E SIGN DETAIL

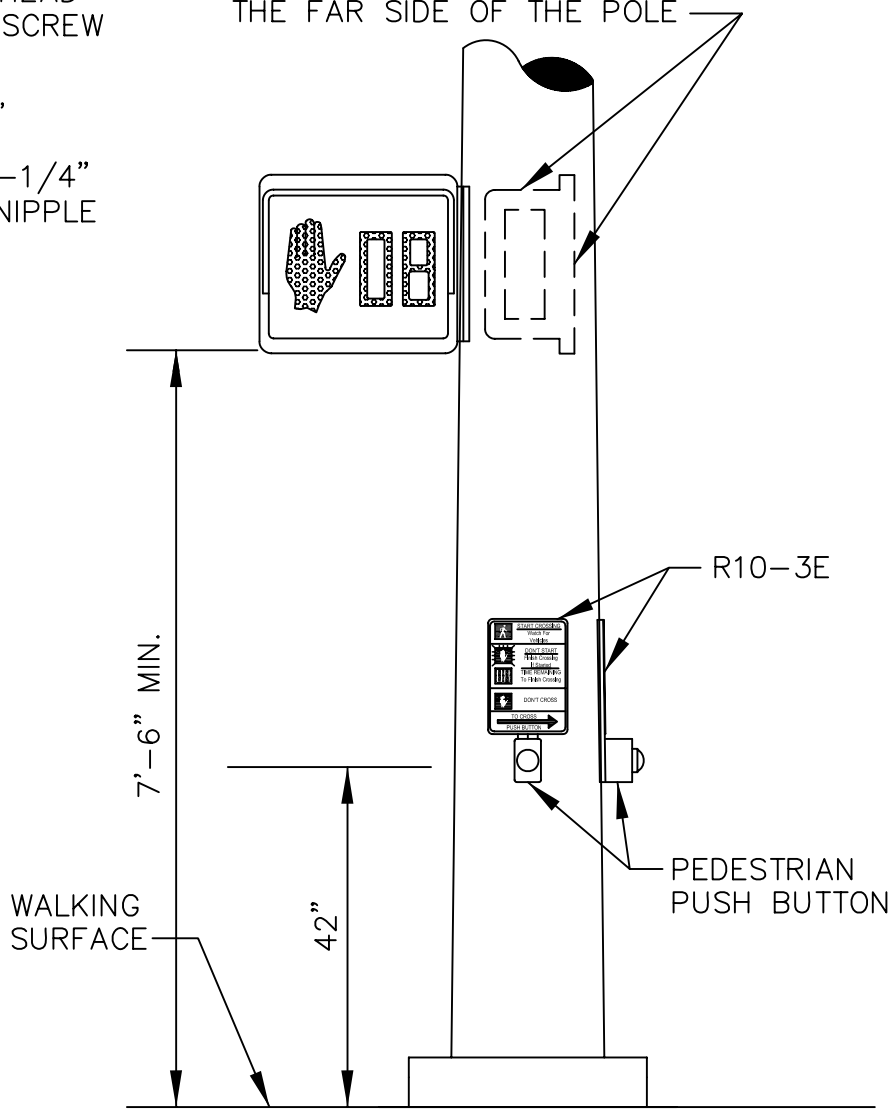

PEDESTRIAN HARDWARE

MUNICIPALITY OF ANCHORAGE	SCALE: NTS APPROVED: REVISED: 6/08	**PEDESTRIAN PUSH BUTTON ASSEMBLY**	SECTION # 80.21 DETAIL # 80-28

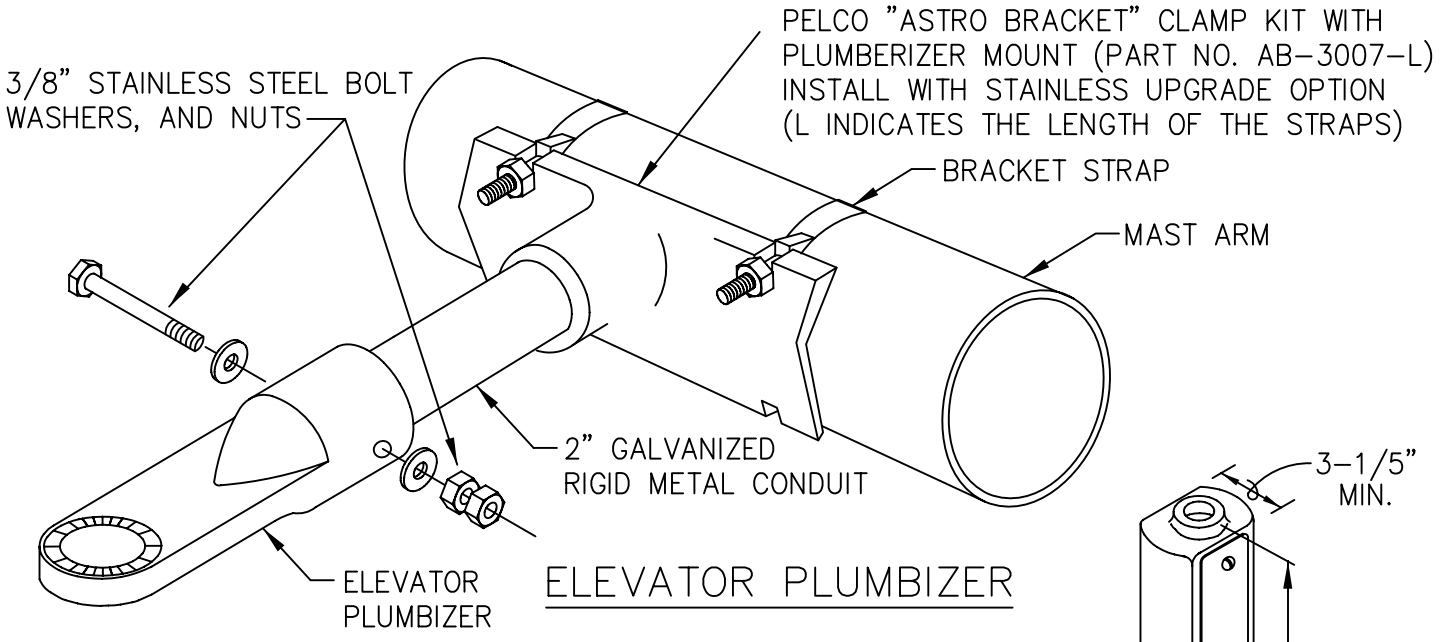

ELEVATOR PLUMBIZER

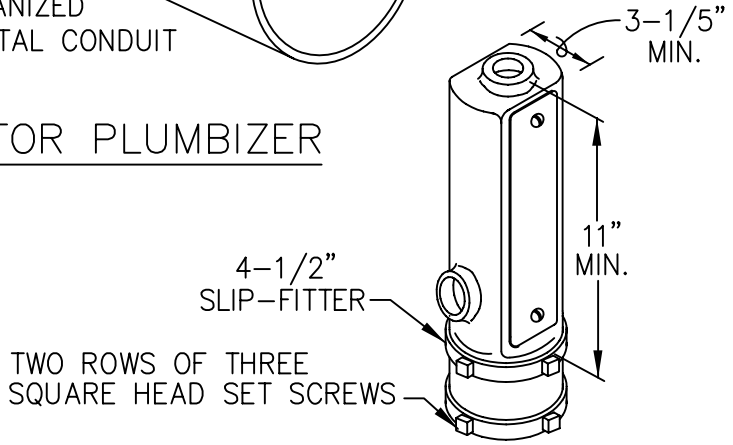

TERMINAL COMPARTMENT WITH SLIP FITTER

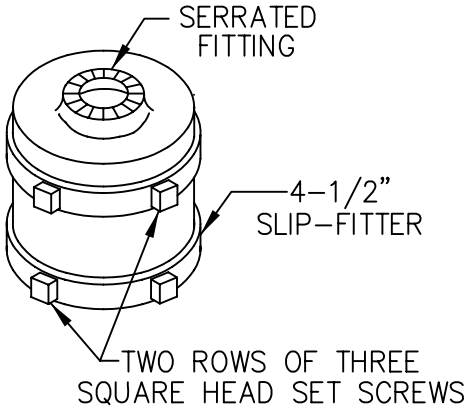

SLIP FITTER

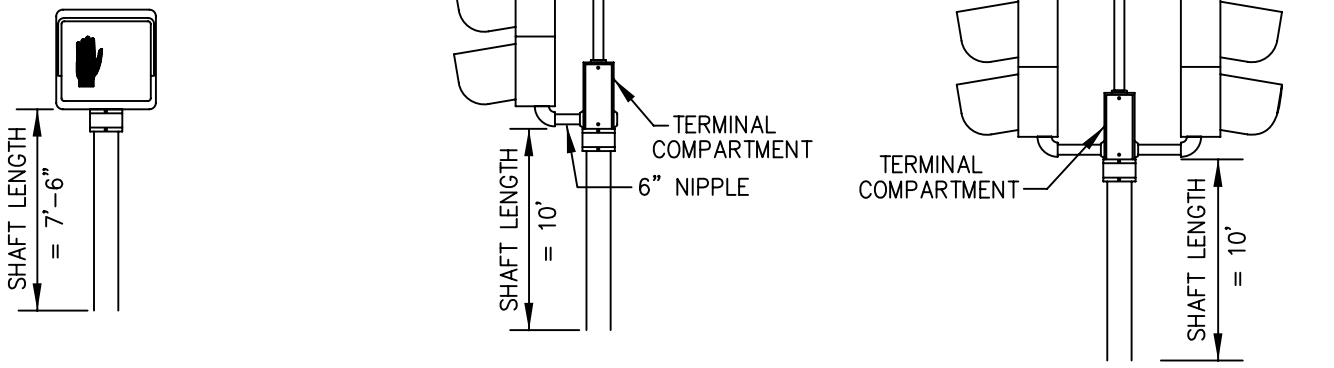

POST TOP MOUNTED SIGNAL DETAILS

(SHOWN WITHOUT BACKPLATES)

MUNICIPALITY OF ANCHORAGE	SCALE: NTS APPROVED: REVISED: 10/07	**POST TOP AND MAST ARM MOUNTED SIGNAL DETAILS**	SECTION # 80.19 DETAIL # 80-29

STANDARD DETAIL REMOVED

REVISION: 3/13 STANDARD DETAIL NO LONGER UTILIZED

MUNICIPALITY OF ANCHORAGE	SCALE: NTS APPROVED: REVISED: 3/13	TYPE 1 JUNCTION BOX	SECTION # 80.08 DETAIL # 80–30

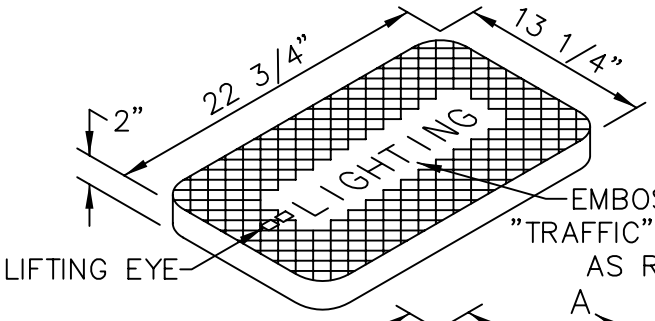

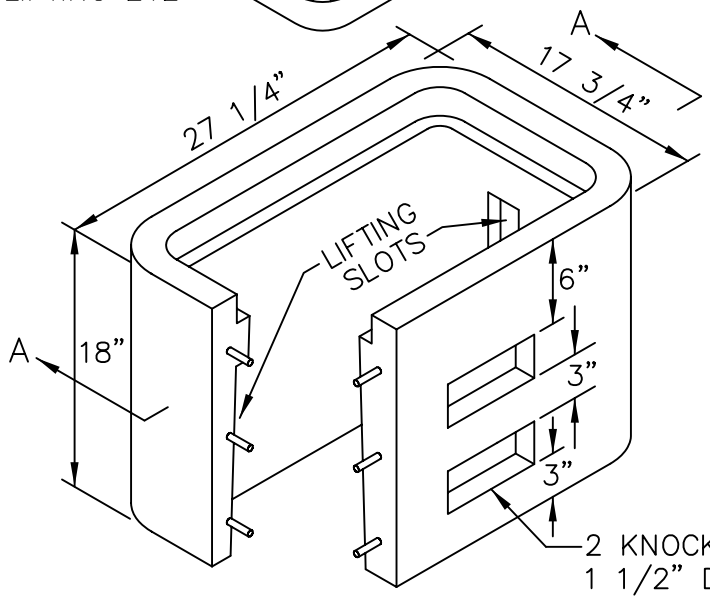

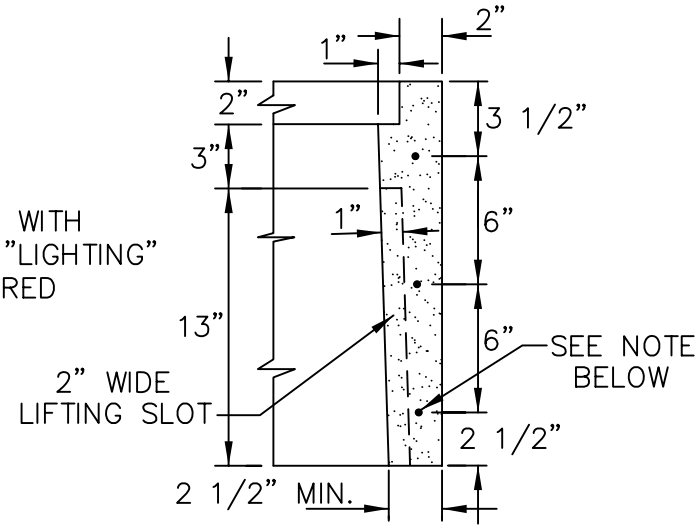

DETAIL A

NOTE: REINFORCEMENT MAY CONSIST OF;
1. 9 GAGE WELDED WIRE FRAME.
2. 3–6 GAGE HORIZONTAL WIRE LOOPS.
3. SYNTHETIC FIBER REINFORCED CONCRETE THAT MEETS ASTM C 1116 AND CONTAINS FIBER IN PROPORTIONS AS RECOMMENDED BY THE FIBER MANUFACTURER.

2 KNOCKOUTS CENTERED ON ONE SIDE
1 1/2" DEEP x 3" HIGH x 7" WIDE
FOR LOOP DETECTOR INSTALLATION

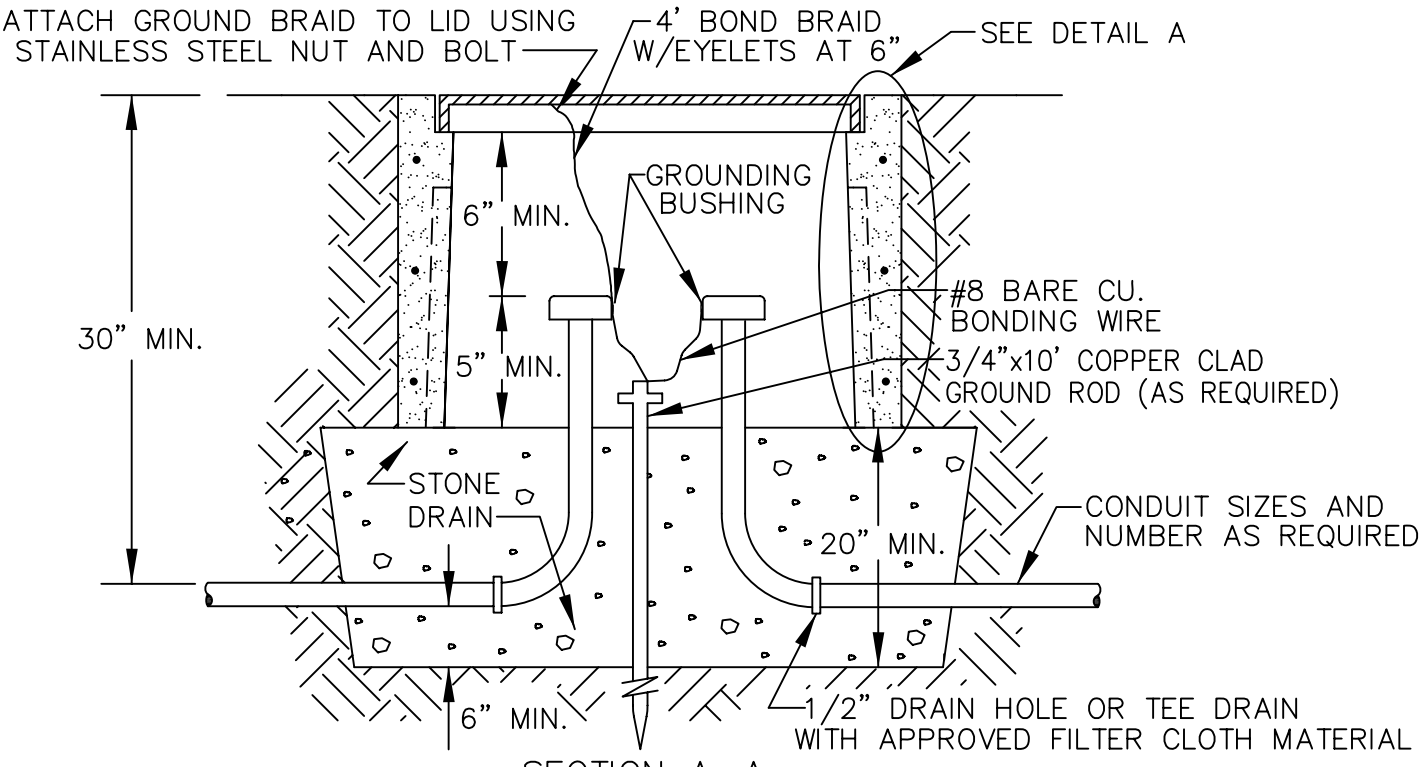

SECTION A–A

MUNICIPALITY OF ANCHORAGE	SCALE: NTS APPROVED: REVISED: 10/07	**TYPE 1A JUNCTION BOX**	SECTION # 80.08 DETAIL # 80–31

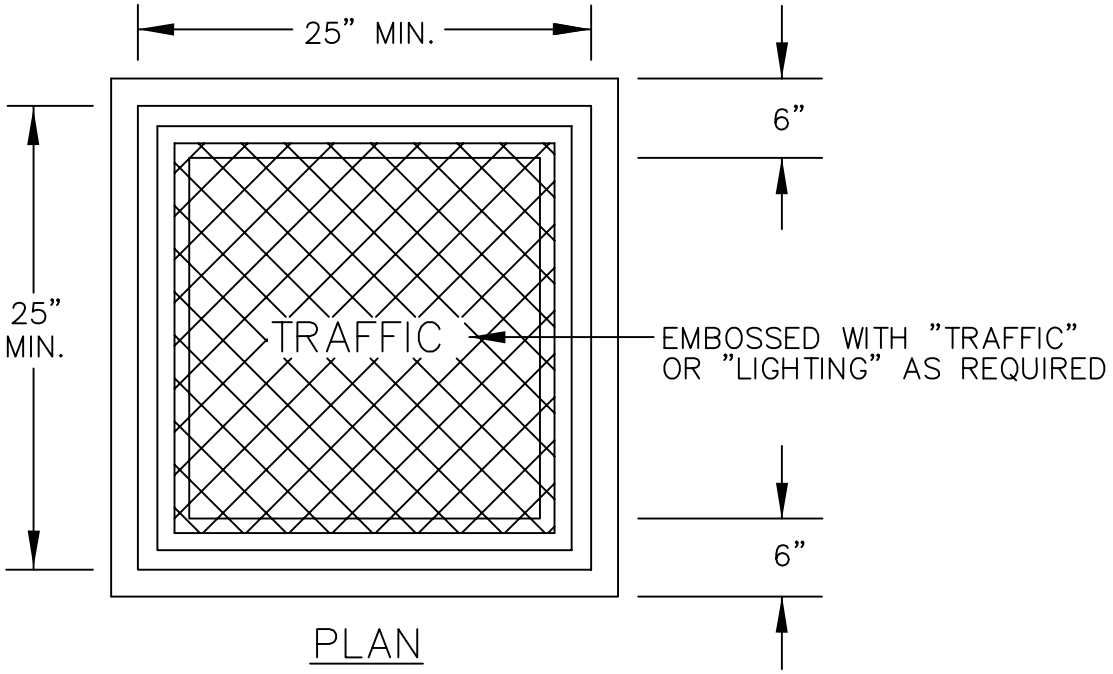

PLAN

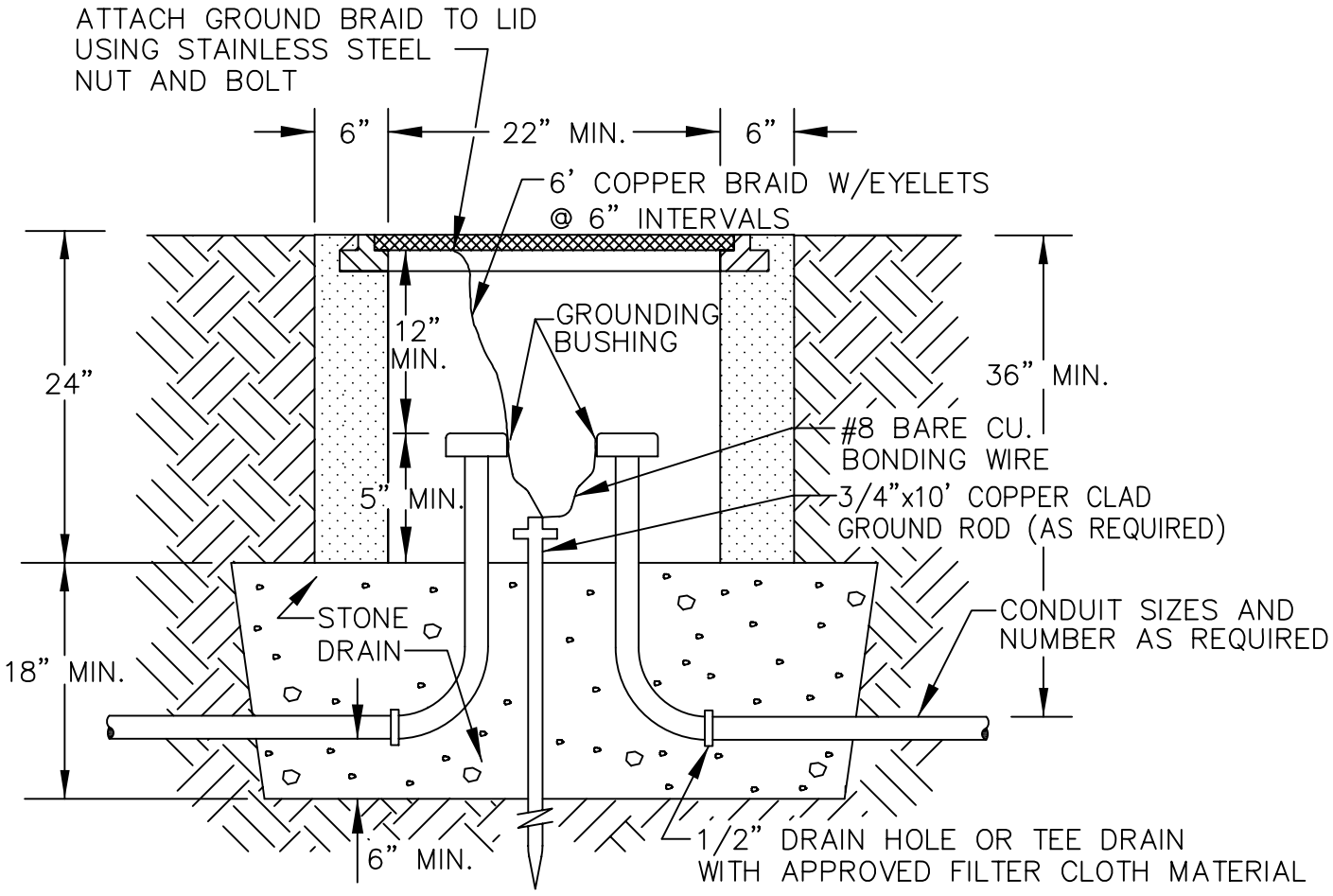

SECTION

MUNICIPALITY OF ANCHORAGE	SCALE: NTS APPROVED: REVISED: 5/08	**TYPE II JUNCTION BOX**	SECTION # 80.08 DETAIL # 80–32

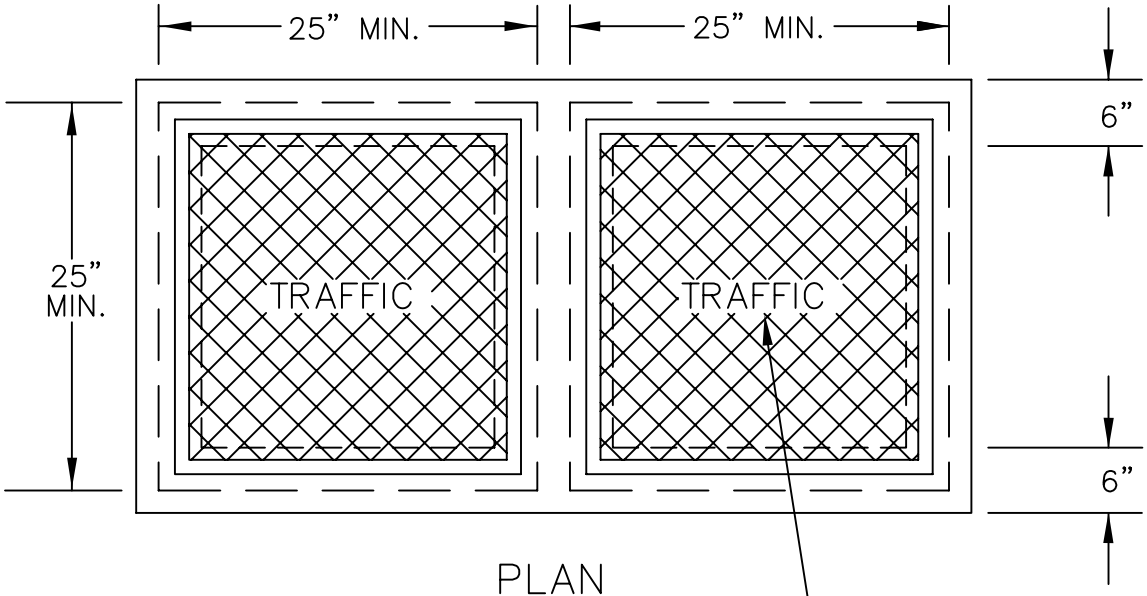

PLAN

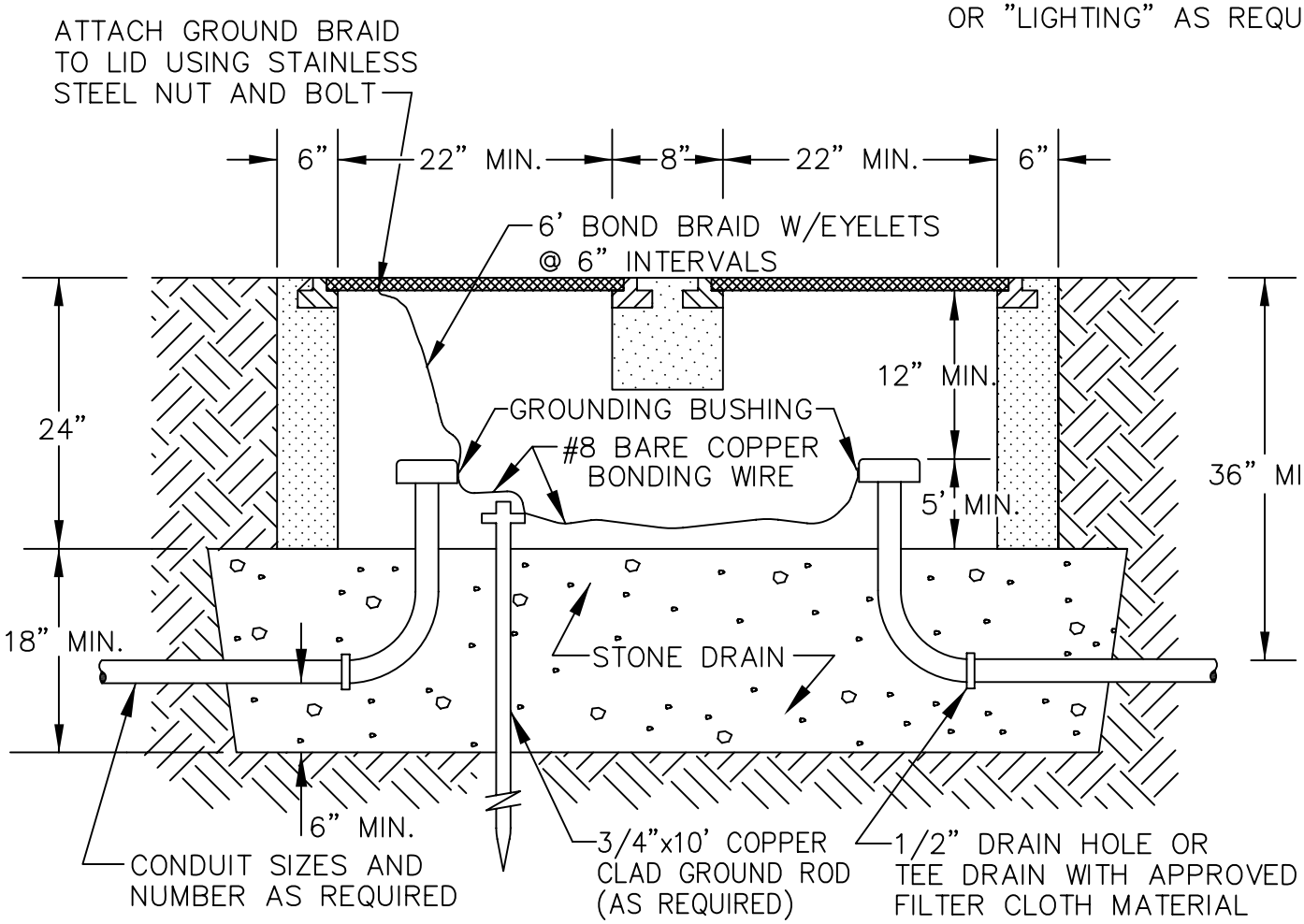

SECTION

MUNICIPALITY OF ANCHORAGE	SCALE: NTS APPROVED: REVISED: 5/08	**TYPE III JUNCTION BOX**	SECTION # 80.08 DETAIL # 80–33

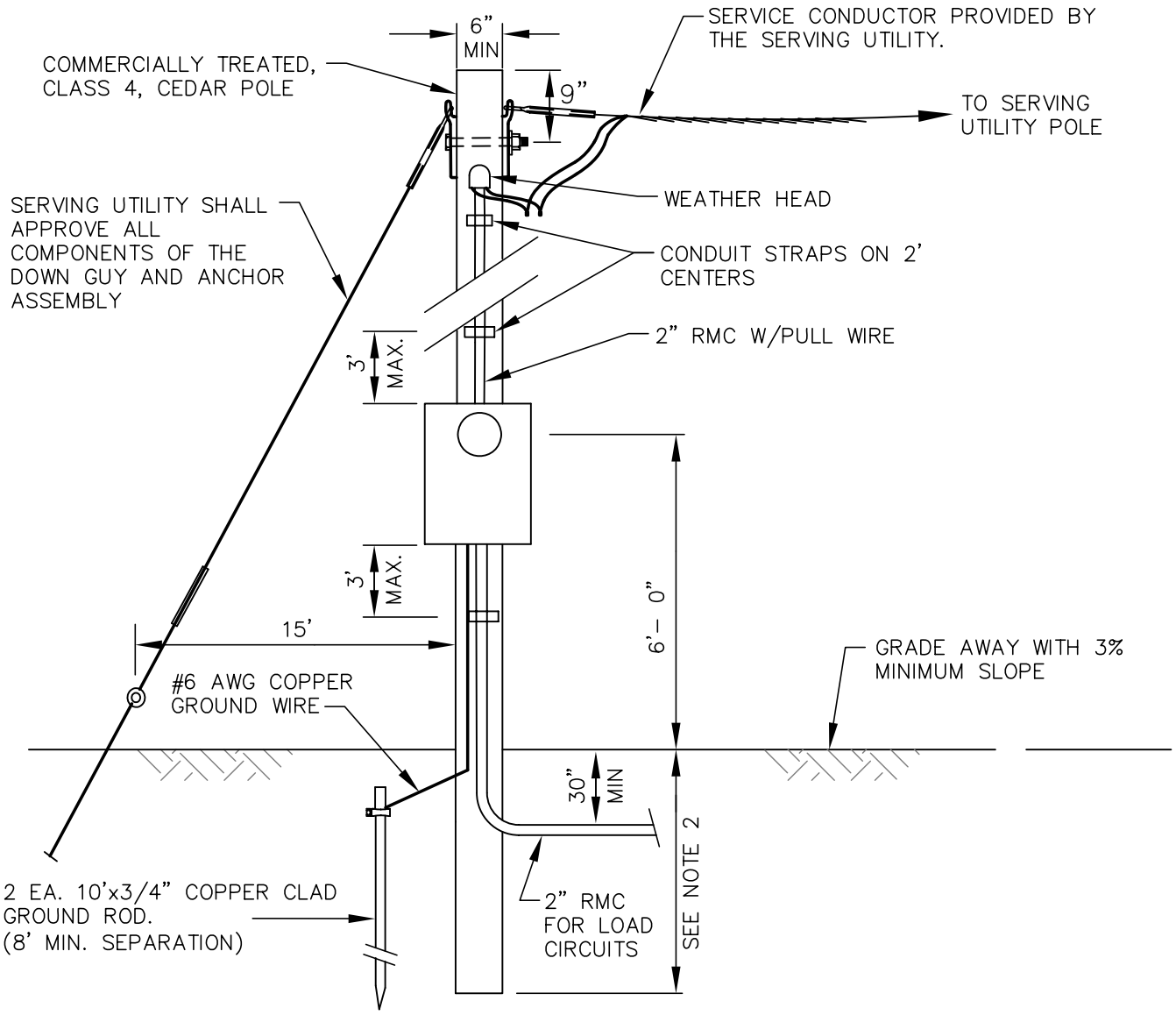

NOTES:

1. COORDINATE WITH SERVING UTILITY REGARDING SPECIFIC CONSTRUCTION REQUIREMENTS FOR SERVICE.
2. SET THE BUTT END OF TYPE 3 LOAD CENTER POLES TO THE FOLLOWING MINIMUM DEPTH:
   A. 10 PERCENT OF ITS LENGTH PLUS 2 FEET, OR 5 FEET, WHICHEVER IS GREATER, IF IT IS INSTALLED IN EARTH OTHER THAN SOLID ROCK OR MUSKEG.
   B. 10 PERCENT OF ITS LENGTH, OR 4 FEET, WHICHEVER IS GREATER, IF IT IS INSTALLED IN SOLID ROCK.
   C. CONSIDER MUSKEG TO BE AIR, AND SET THE BUT ENDS TO THE DEPTH GIVEN IN A OR B, WHICHEVER APPLIES, IN THE UNDERLYING EARTH OR ROCK.
3. WHENEVER MORE THAN TWO FEET OF EARTH OVERLAYS ROCK, OR THE DIAMETER OF THE DRILLED HOLE IN ROCK EXCEEDS TWICE THE DIAMETER OF THE POLE AT THE GROUND LINE, CONSIDER THE INSTALLATION AS EARTH.

MUNICIPALITY OF ANCHORAGE	SCALE: NTS APPROVED: REVISED: 7/08	POST MOUNTED LOAD CENTER TYPE 3	SECTION # 80.14 DETAIL # 80–34

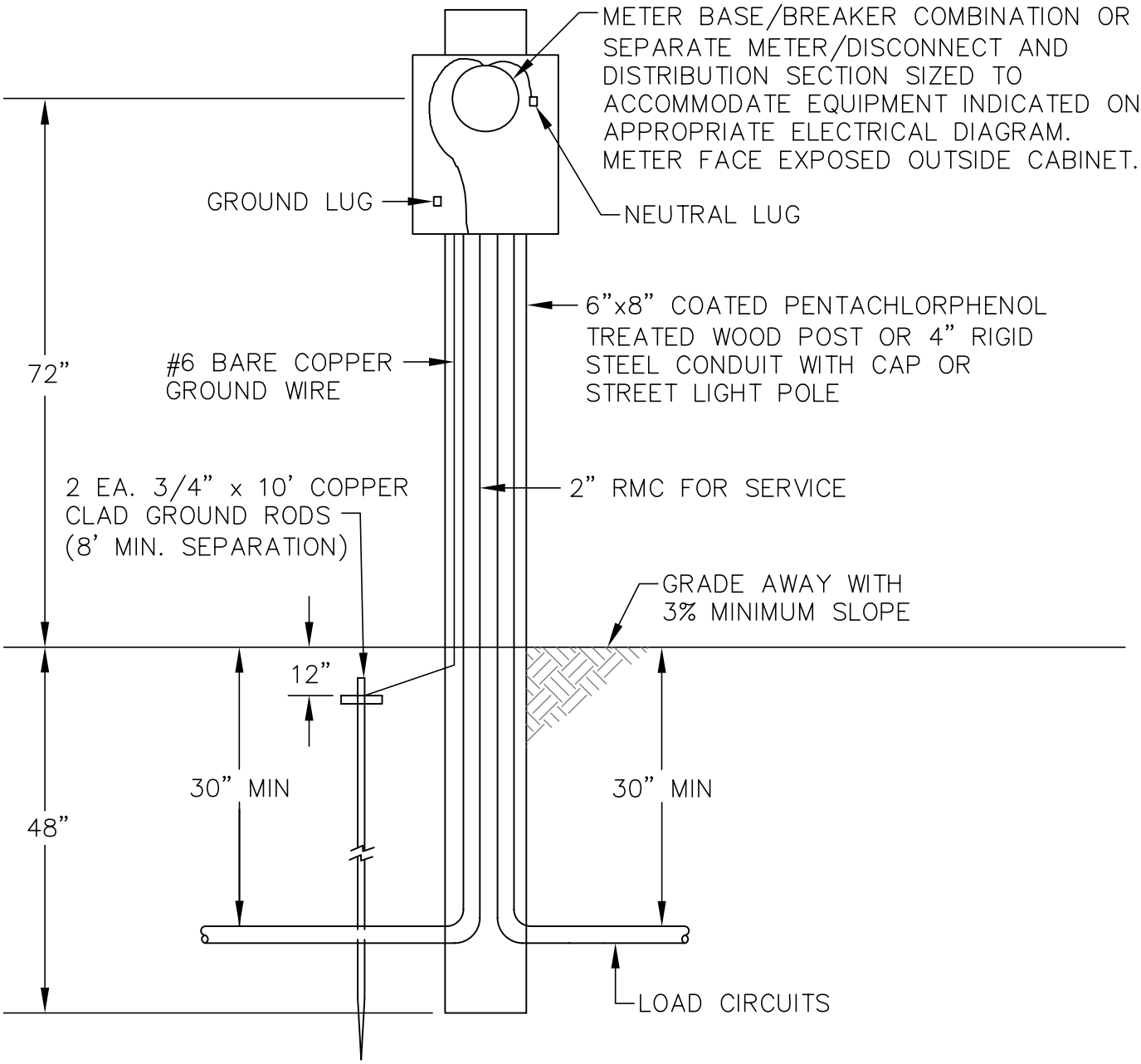

NOTES:

1. ATTACH CONDUITS TO POLE AT 24" INTERVALS.
2. ATTACH GROUND WIRE TO POLE AT 12" INTERVALS.
3. ON STEEL POST, ENCLOSE GROUND WIRE IN 3/4" RMC, BOND EACH END OF CONDUIT TO GROUND WIRE.
4. EMBED LOWER 42" OF STEEL POST IN CONCRETE HAVING A MINIMUM 18" OVERALL DIA. BACKFILL AROUND WOOD POST WITH N.F.S. MATERIAL.
5. LOCATE OUT OF DITCH LINE, 5 FT. MINIMUM FROM BACK OF CURB.
6. COORDINATE WITH SERVING UTILITY REGARDING SPECIFIC CONSTRUCTION REQUIREMENTS FOR SERVICE.

MUNICIPALITY OF ANCHORAGE	SCALE: NTS APPROVED: REVISED: 7/08	POST MOUNTED LOAD CENTER - TYPE 2	SECTION # 80.14 DETAIL # 80-35

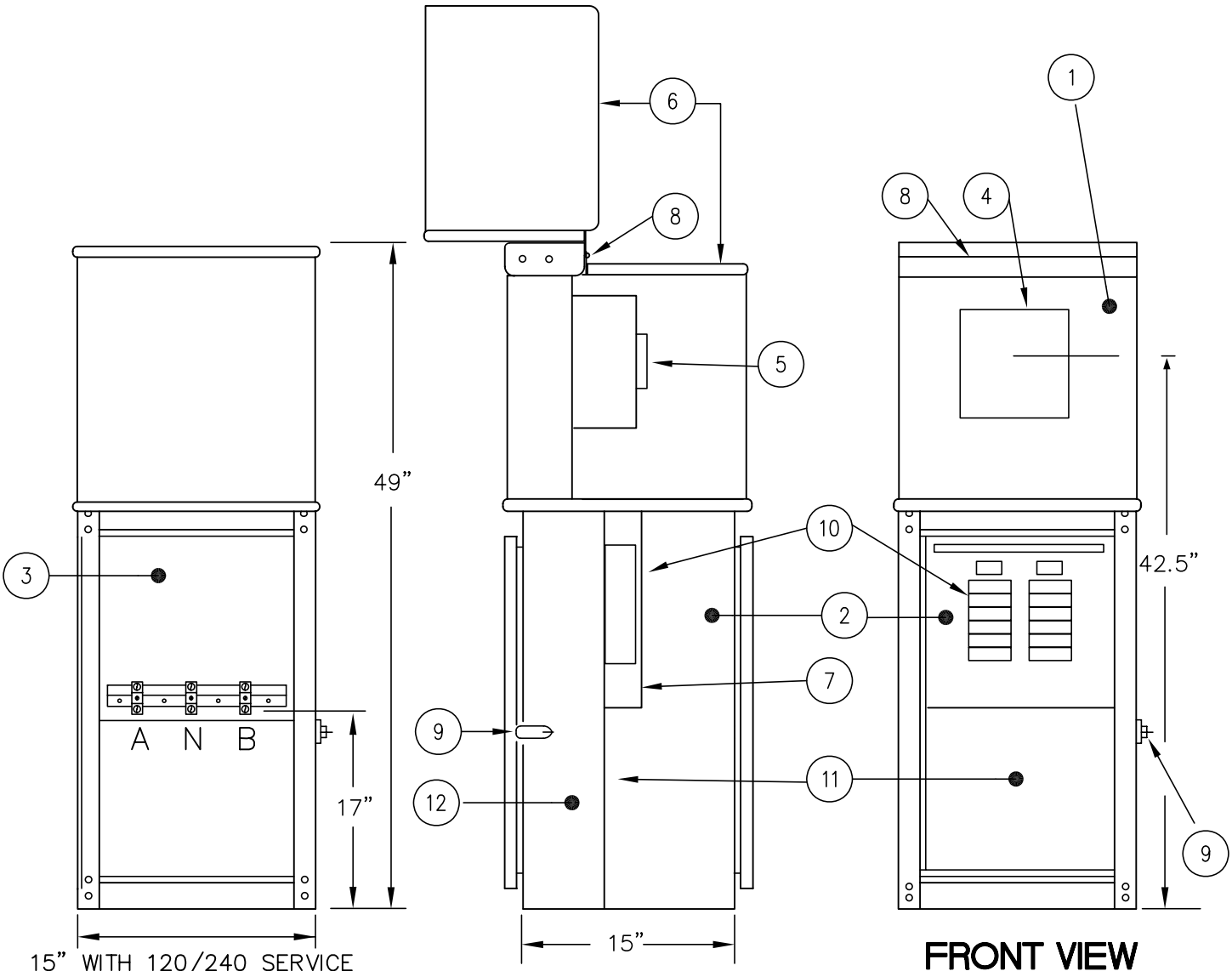

REAR VIEW
(W/ DOOR REMOVED)

SIDE VIEW
(W/ METER SECTION OPEN)

FRONT VIEW
(W/ DOOR REMOVED)

EQUIPMENT LEGEND/DESCRIPTION

1. METERING SECTION
2. LOAD SECTION
3. UTILITY CONNECTION AND TEST BLOCK SECTION
4. METER READING WINDOW (8"X8")
5. METER SOCKET W/BYPASS & SAFETY SOCKET
6. LIFT AWAY METER SECTION COVER
7. DEADFRONT
8. STAINLESS STEEL PIN HINGE
9. PADLOCKING PROVISIONS
10. DISTRIBUTION PANEL W/ MAIN BREAKER
11. ACCESSORY MOUNTING EQUIPMENT AREA
12. SERVICE PULL SECTION.

MUNICIPALITY OF ANCHORAGE	SCALE: NTS APPROVED: REVISED: 7/08	PAD MOUNTED LOAD CENTER - TYPE 1A	SECTION # 80.14 DETAIL # 80-36

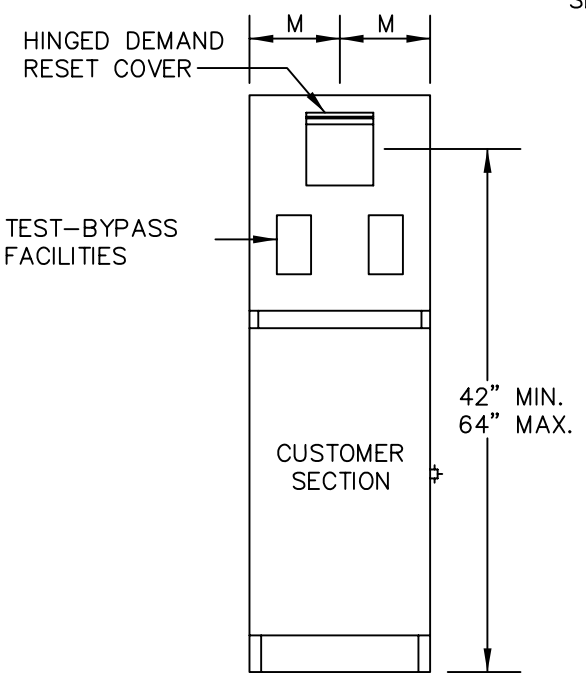

FRONT VIEW

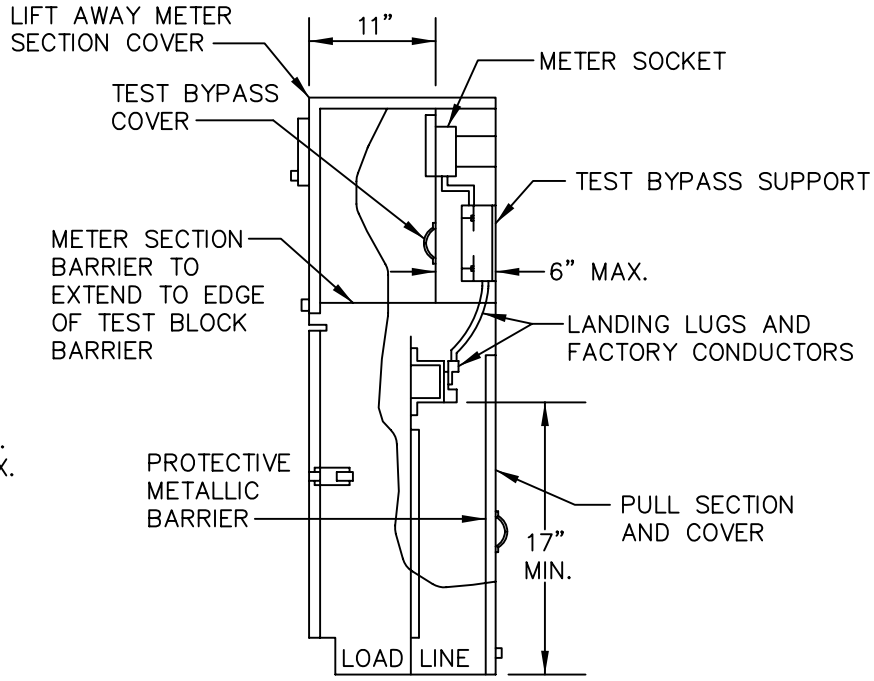

SIDE VIEW

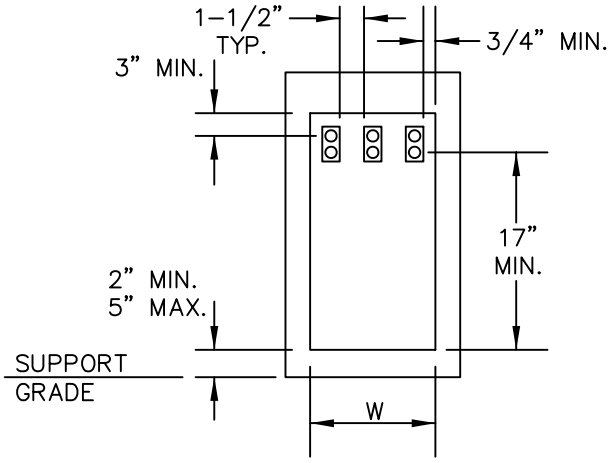

WIREWAY PULL SECTION

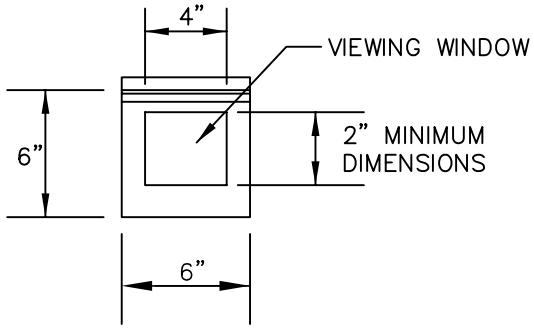

HINGED DEMAND RESET
WITH POLYCARBONATE VIEWING

MINIMUM DIMENSIONS

SERVICE	W	A
1 PHASE	10–1/2"	10"
3 PHASE	12–1/2"	

MUNICIPALITY OF ANCHORAGE	SCALE: NTS APPROVED: REVISED: 10/07	**PAD MOUNTED LOAD CENTER – TYPE 1**	SECTION # 80.14 DETAIL # 80–37

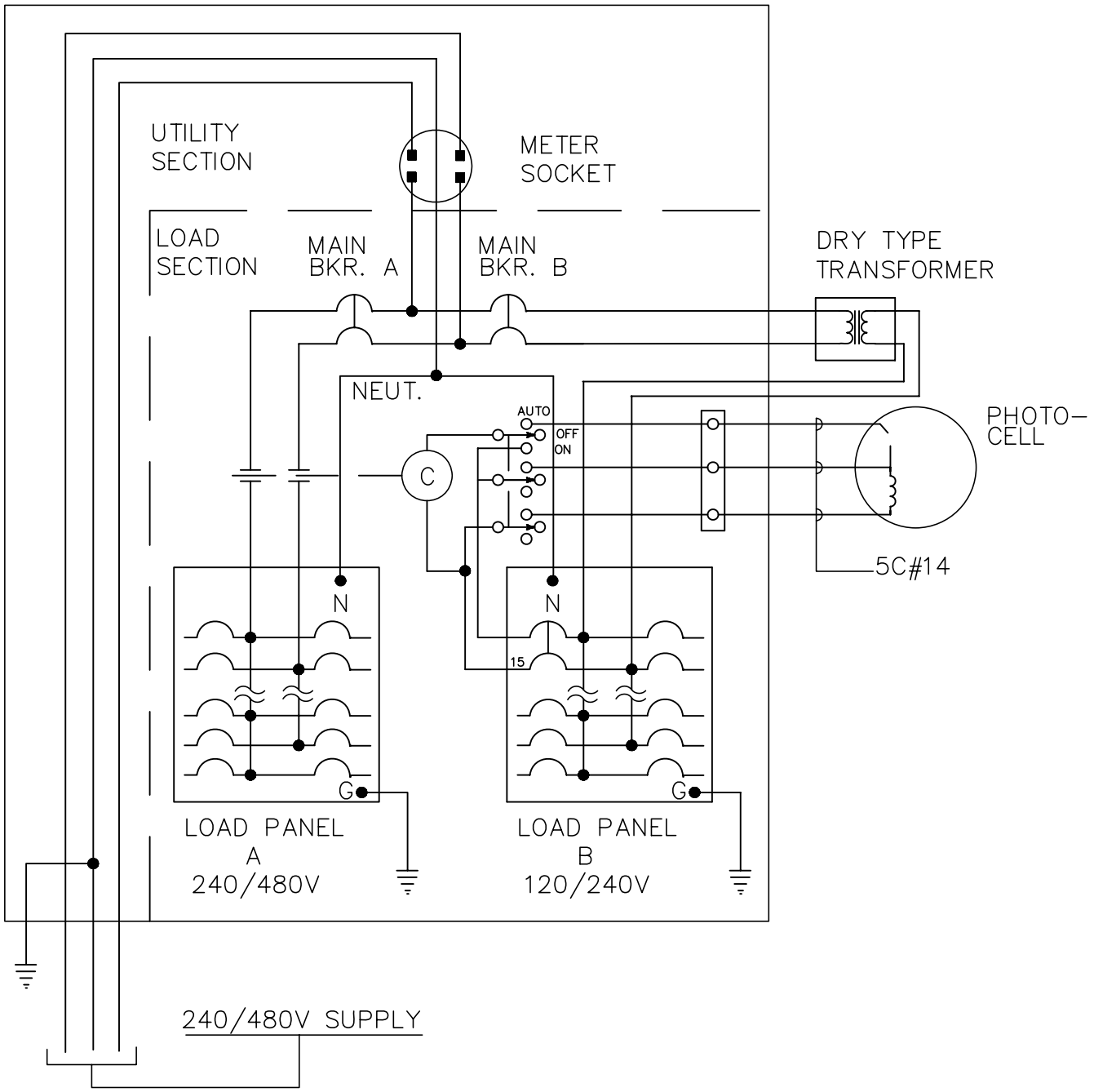

NOTE:

1. SEE PANEL SCHEDULE, STANDARD DETAIL 80–39

MUNICIPALITY OF ANCHORAGE	SCALE: NTS APPROVED: REVISED: 10/07	**LOAD CENTER WIRING DIAGRAM "A"**	SECTION # 80.14 DETAIL # 80–38

LOAD CENTER NO. _____ TYPE _____

LOCATION _____

240/480 VOLTS, SINGLE PHASE, _____ AMP SUPPLY

_____ AMPS INTERRUPTING CURRENT

MAIN BREAKER A : 2 POLE, _____ AMPS, 480 VOLTS

MAIN BREAKER B : 2 POLE, _____ AMPS, 240 VOLTS

CONTACTOR RATING: _____ AMPS

TRANSFORMER RATING: 120/240–240/480., _____ KVA

PANEL A

240/480 VOLTS SINGLE PHASE 3 WIRE

_____ AMPS MAIN LUGS, _____ AMPS INTERRUPT CAPACITY

CKT. DESCRIPTION	KVA	AMP		AMP	KVA	CKT. DESCRIPTION
			1			
			3			
			5			
			7			
			9			
			11			
			13			
			15			
			17			
			19			

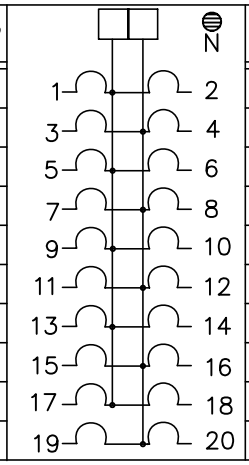

PANEL B

120/240 VOLTS SINGLE PHASE 3 WIRE

_____ AMPS MAIN LUGS, _____ AMPS INTERRUPT CAPACITY

CKT. DESCRIPTION	KVA	AMP		AMP	KVA	CKT. DESCRIPTION
PHOTO CELL	0.1	15	1			
			3			
			5			
			7			
			9			
			11			
			13			
			15			
			17			
			19			

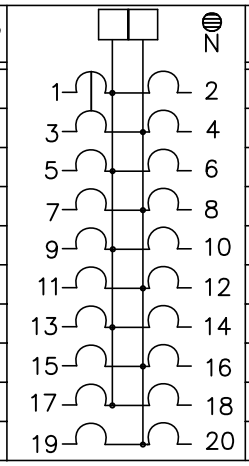

NOTE: SEE CONSTRUCTION DRAWINGS FOR NUMBER & SIZE OF BREAKERS.

MUNICIPALITY OF ANCHORAGE	SCALE: NTS APPROVED: REVISED: 10/07	**PANEL SCHEDULE FOR WIRING DIAGRAM "A"**	SECTION # 80.14 DETAIL # 80–39

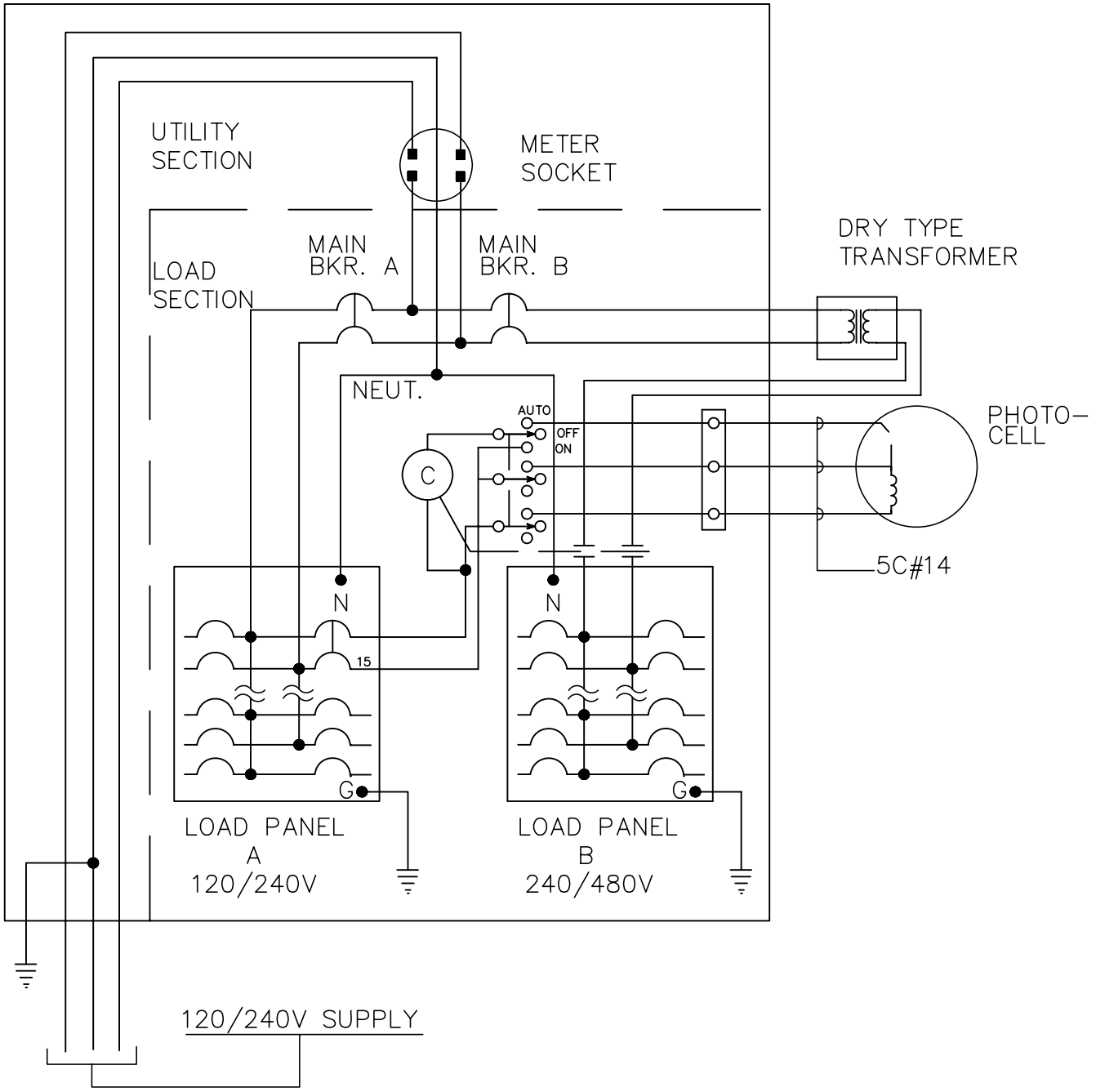

NOTE:

1. SEE PANEL SCHEDULE, STANDARD DETAIL 80–41

MUNICIPALITY OF ANCHORAGE	SCALE: NTS APPROVED: REVISED: 10/07	**LOAD CENTER WIRING DIAGRAM "B"**	SECTION # 80.14 DETAIL # 80–40

LOAD CENTER NO. _____ TYPE _____

LOCATION _____

120/240 VOLTS, SINGLE PHASE, _____ AMP SUPPLY

_____ AMPS INTERRUPTING CURRENT

MAIN BREAKER A : 2 POLE, _____ AMPS, 240 VOLTS

MAIN BREAKER B : 2 POLE, _____ AMPS, 480 VOLTS

CONTACTOR RATING: _____ AMPS,

TRANSFORMER RATING: 120/240–240/480., _____ KVA

PANEL A — 120/240 VOLTS — SINGLE PHASE 3 WIRE

_____ AMPS MAIN LUGS, _____ AMPS INTERRUPT CAPACITY

CKT. DESCRIPTION	KVA	AMP		AMP	KVA	CKT. DESCRIPTION
PHOTO CELL	0.1	15	1			
			3			
			5			
			7			
			9			
			11			
			13			
			15			
			17			
			19			

N

2
4
6
8
10
12
14
16
18
20

PANEL B — 240/480 VOLTS — SINGLE PHASE 3 WIRE

_____ AMPS MAIN LUGS, _____ AMPS INTERRUPT CAPACITY

CKT. DESCRIPTION	KVA	AMP		AMP	KVA	CKT. DESCRIPTION
			1			
			3			
			5			
			7			
			9			
			11			
			13			
			15			
			17			
			19			

N

2
4
6
8
10
12
14
16
18
20

NOTE: SEE CONSTRUCTION DRAWINGS FOR NUMBER & SIZE OF BREAKERS.

MUNICIPALITY OF ANCHORAGE

SCALE: NTS

APPROVED:

REVISED: 10/07

PANEL SCHEDULE FOR WIRING DIAGRAM "B"

SECTION # 80.14

DETAIL # 80–41

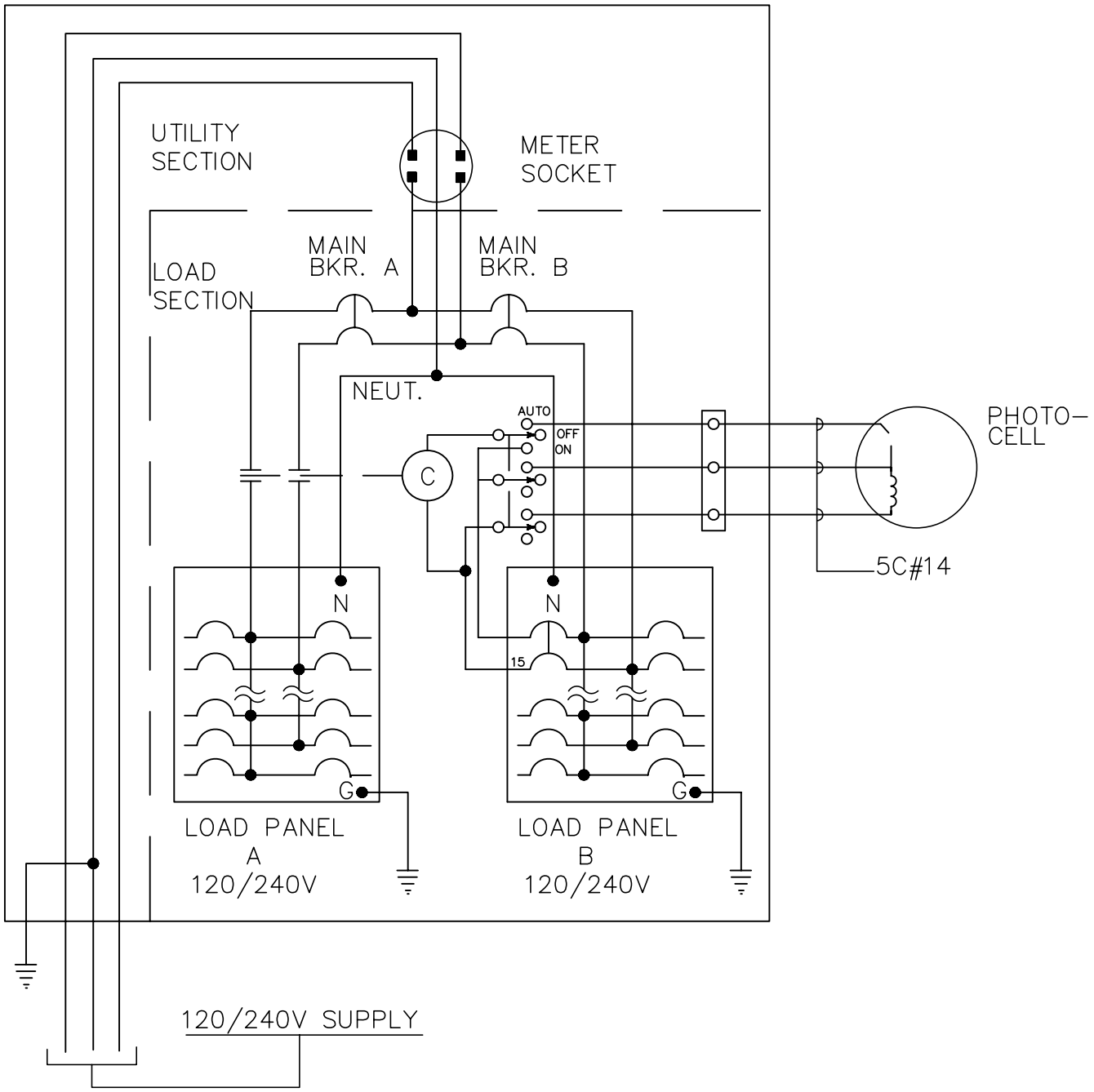

NOTE:

1. SEE PANEL SCHEDULE, STANDARD DETAIL 80–43

MUNICIPALITY OF ANCHORAGE	SCALE: NTS APPROVED: REVISED: 10/07	**LOAD CENTER WIRING DIAGRAM "C"**	SECTION # 80.14 DETAIL # 80–42

LOAD CENTER NO. _____ TYPE _____

LOCATION _____

120/240 VOLTS, SINGLE PHASE, _____ AMP SUPPLY

_____ AMPS INTERRUPTING CURRENT

MAIN BREAKER A : 2 POLE, _____ AMPS, 240 VOLTS

MAIN BREAKER B : 2 POLE, _____ AMPS, 240 VOLTS

CONTACTOR RATING: _____ AMPS, 240 VOLTS

PANEL A — 120/240 VOLTS — SINGLE PHASE 3 WIRE

_____ AMPS MAIN LUGS, _____ AMPS INTERRUPT CAPACITY

CKT. DESCRIPTION	KVA	AMP		AMP	KVA	CKT. DESCRIPTION
			N			
			1 — 2			
			3 — 4			
			5 — 6			
			7 — 8			
			9 — 10			
			11 — 12			
			13 — 14			
			15 — 16			
			17 — 18			
			19 — 20			

PANEL B — 120/240 VOLTS — SINGLE PHASE 3 WIRE

_____ AMPS MAIN LUGS, _____ AMPS INTERRUPT CAPACITY

CKT. DESCRIPTION	KVA	AMP		AMP	KVA	CKT. DESCRIPTION
			N			
PHOTO CELL	0.1	15	1 — 2			
↓	↓	↓	3 — 4			
			5 — 6			
			7 — 8			
			9 — 10			
			11 — 12			
			13 — 14			
			15 — 16			
			17 — 18			
			19 — 20			

NOTE: SEE CONSTRUCTION DRAWINGS FOR NUMBER & SIZE OF BREAKERS.

MUNICIPALITY OF ANCHORAGE	SCALE: NTS APPROVED: REVISED: 10/07	**PANEL SCHEDULE FOR WIRING DIAGRAM "C"**	SECTION # 80.14 DETAIL # 80–43

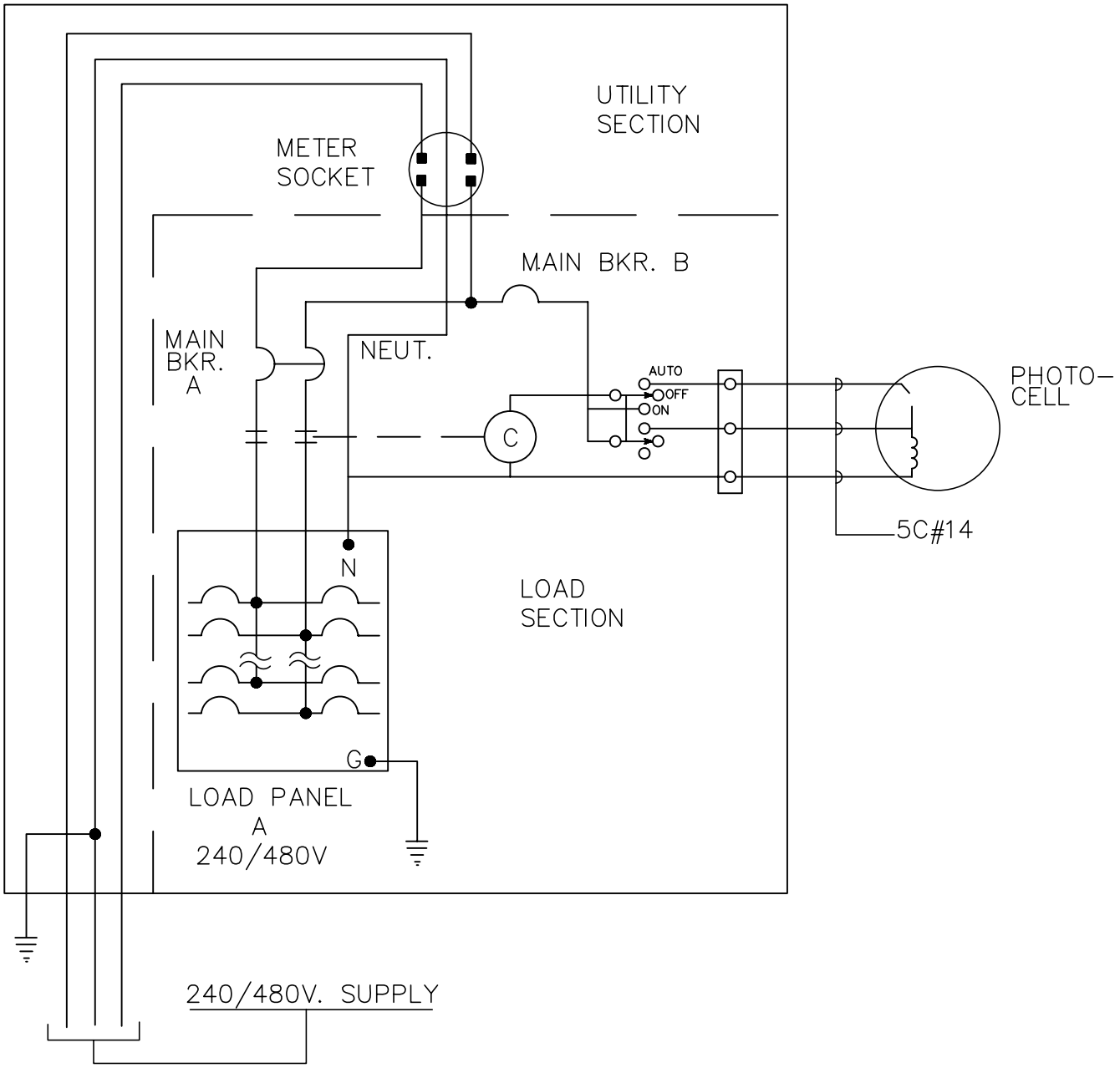

NOTE:

1. SEE PANEL SCHEDULE, STANDARD DETAIL 80–45

MUNICIPALITY OF ANCHORAGE	SCALE: NTS APPROVED: REVISED: 10/07	**LOAD CENTER WIRING DIAGRAM "D"**	SECTION # 80.14 DETAIL # 80–44

LOAD CENTER NO. _____ TYPE _____

LOCATION _____

240/480 VOLTS, SINGLE PHASE, _____ AMP SUPPLY

_____ AMPS INTERRUPTING CURRENT

MAIN BREAKER A : 2 POLE, _____ AMPS, 480 VOLTS

MAIN BREAKER B : 1 POLE, 15 AMPS, 240 VOLTS

CONTACTOR RATING: _____ AMPS, 240 VOLTS

PANEL A 240/480 VOLTS SINGLE PHASE 3 WIRE

_____ AMPS MAIN LUGS, _____ AMPS INTERRUPT CAPACITY

CKT. DESCRIPTION	KVA	AMP		AMP	KVA	CKT. DESCRIPTION
			1			
			3			
			5			
			7			
			9			
			11			
			13			
			15			
			17			
			19			
			N			
			2			
			4			
			6			
			8			
			10			
			12			
			14			
			16			
			18			
			20			

NOTE: SEE CONSTRUCTION DRAWINGS FOR NUMBER & SIZE OF BREAKERS.

MUNICIPALITY OF ANCHORAGE	SCALE: NTS APPROVED: REVISED: 10/07	**PANEL SCHEDULE FOR WIRING DIAGRAM "D"**	SECTION # 80.14 DETAIL # 80–45

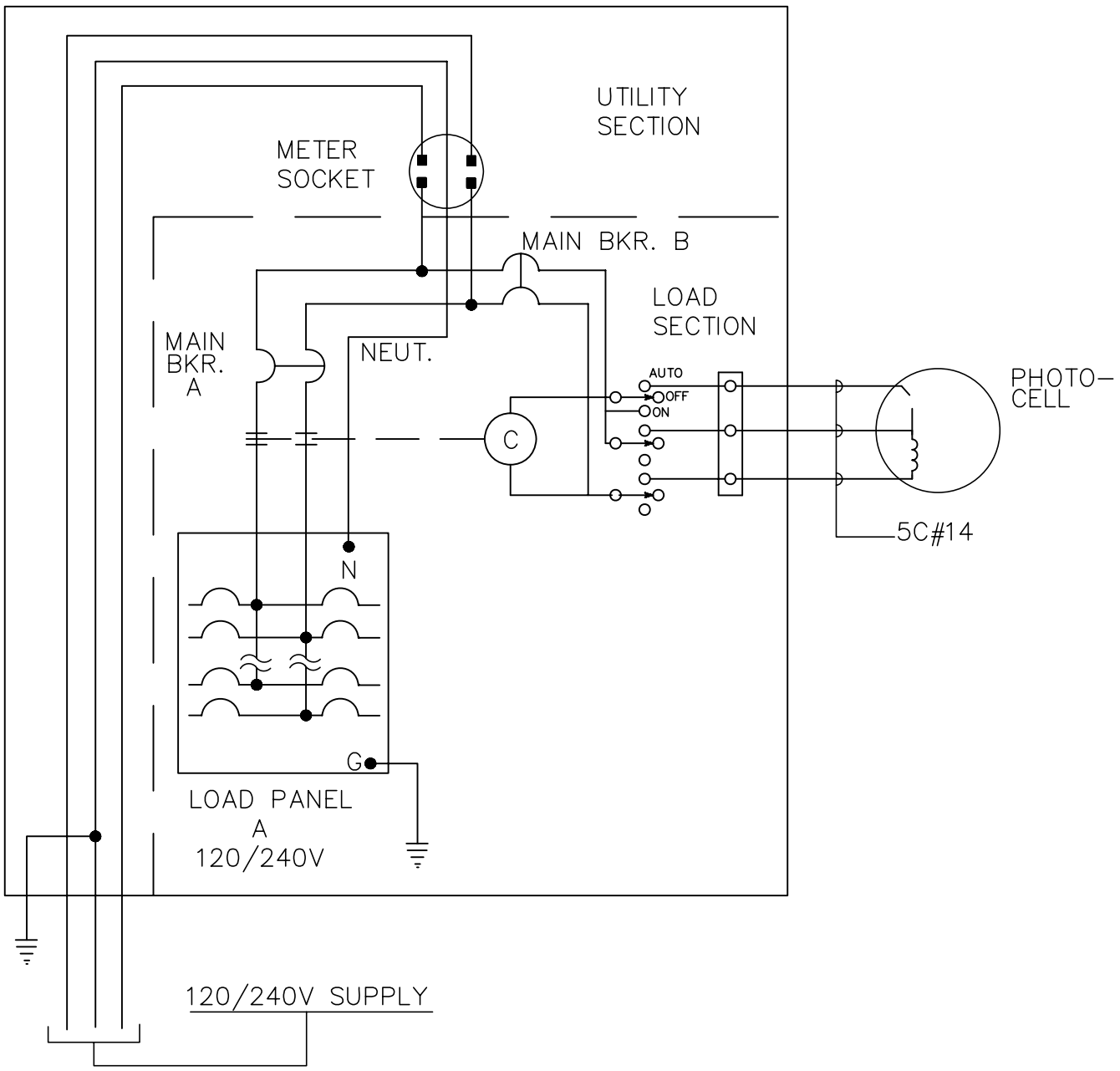

NOTE:

1. SEE PANEL SCHEDULE, STANDARD DETAIL 80–47

MUNICIPALITY OF ANCHORAGE	SCALE: NTS APPROVED: REVISED: 10/07	**LOAD CENTER WIRING DIAGRAM "E"**	SECTION # 80.14 DETAIL # 80–46

LOAD CENTER NO. _____ TYPE: _____

LOCATION: _____

120/240 VOLTS, SINGLE PHASE, _____ AMP SUPPLY

_____ AMPS INTERRUPTING CURRENT

MAIN BREAKER A : 2 POLE, _____ AMPS, 240 VOLTS

MAIN BREAKER B : 2 POLE, 15 AMPS, 240 VOLTS

CONTACTOR RATING: _____ AMPS

PANEL A 120/240 VOLTS SINGLE PHASE 3 WIRE

_____ AMPS MAIN LUGS, _____ AMPS INTERRUPT CAPACITY

CKT. DESCRIPTION	KVA	AMP		AMP	KVA	CKT. DESCRIPTION
			1			
			3			
			5			
			7			
			9			
			11			
			13			
			15			
			17			
			19			
			N			
			2			
			4			
			6			
			8			
			10			
			12			
			14			
			16			
			18			
			20			

NOTE: SEE CONSTRUCTION DRAWINGS FOR NUMBER & SIZE OF BREAKERS.

MUNICIPALITY OF ANCHORAGE	SCALE: NTS APPROVED: REVISED: 10/07	**PANEL SCHEDULE FOR WIRING DIAGRAM "E"**	SECTION # 80.14 DETAIL # 80–47

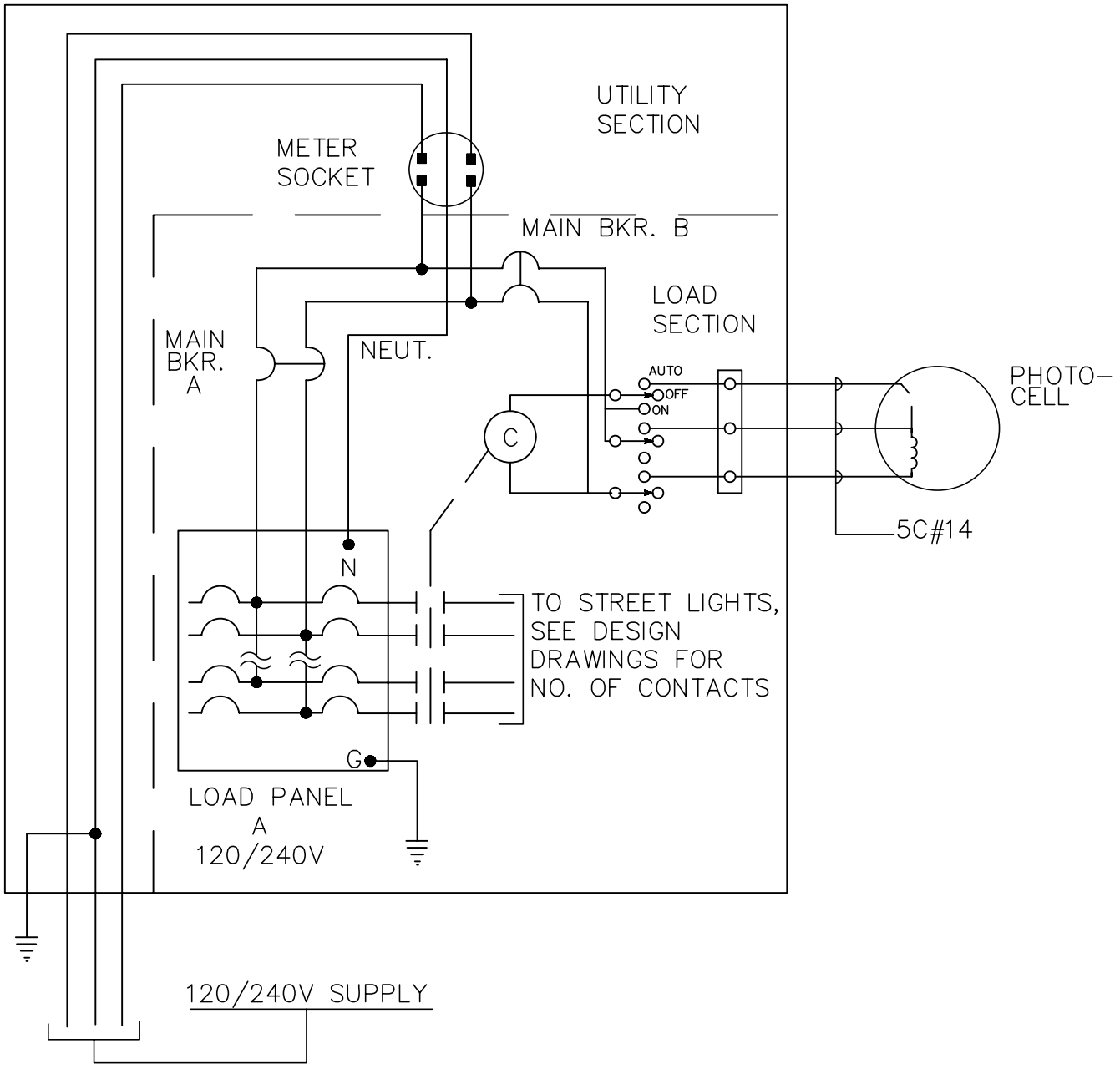

NOTE:

1. SEE PANEL SCHEDULE, STANDARD DETAIL 80–49

MUNICIPALITY OF ANCHORAGE	SCALE: NTS APPROVED: REVISED: 10/07	**LOAD CENTER WIRING DIAGRAM "F"**	SECTION # 80.14 DETAIL # 80–48

LOAD CENTER NO. _____ TYPE: _____

LOCATION: _____

_____ POLE, _____ AMP CONTACTOR

PANEL A 120/240 VOLTS SINGLE PHASE 3 WIRE

_____ AMPS MAIN LUGS, _____ AMPS INTERRUPT CAPACITY

CKT. DESCRIPTION	KVA	AMP		AMP	KVA	CKT. DESCRIPTION
			1			
			3			
			5			
			7			
			9			
			11			
			13			
			15			
			17			
			19			

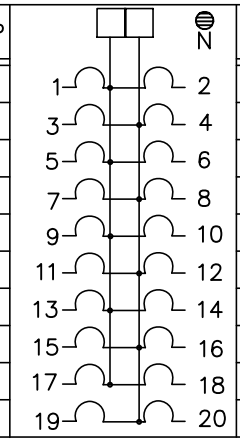

NOTE: SEE CONSTRUCTION DRAWINGS FOR NUMBER & SIZE OF BREAKERS.

MUNICIPALITY OF ANCHORAGE	SCALE: NTS APPROVED: REVISED: 10/07	PANEL SCHEDULE FOR WIRING DIAGRAM "F"	SECTION # 80.14 DETAIL # 80–49

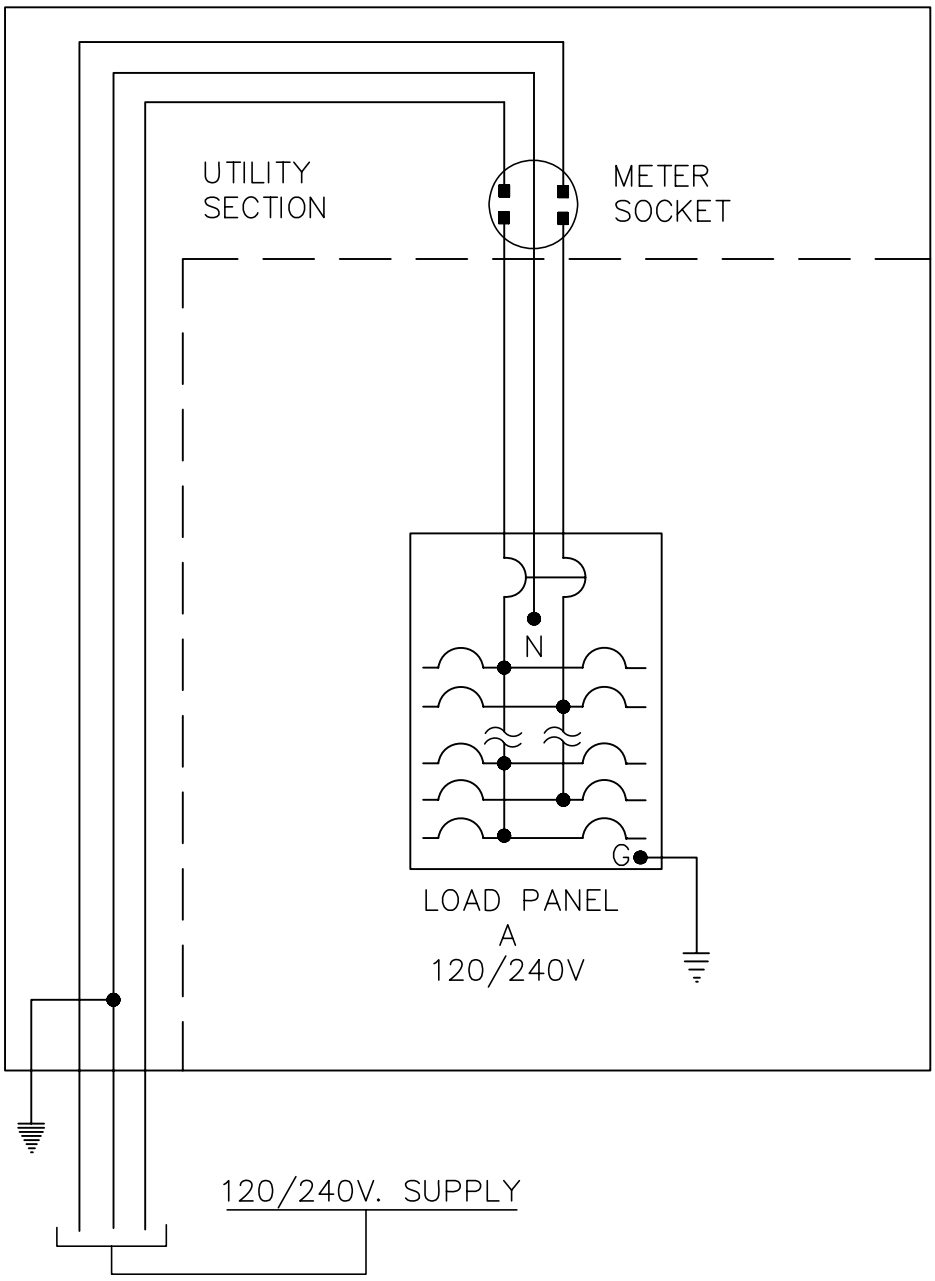

NOTE:
1. SEE PANEL SCHEDULE, DETAIL 80–51

MUNICIPALITY OF ANCHORAGE	SCALE: NTS APPROVED: REVISED: 10/07	**LOAD CENTER WIRING DIAGRAM "G"**	SECTION # 80.14 DETAIL # 80–50

LOAD CENTER NO. _____ TYPE: _____

LOCATION: _____

PANEL A 120/240 VOLTS SINGLE PHASE 3 WIRE

_____ AMPS MAIN LUGS, _____ AMPS INTERRUPT CAPACITY

CKT. DESCRIPTION	KVA	AMP		AMP	KVA	CKT. DESCRIPTION
			1			
			3			
			5			
			7			
			9			
			11			
			13			
			15			
			17			
			19			

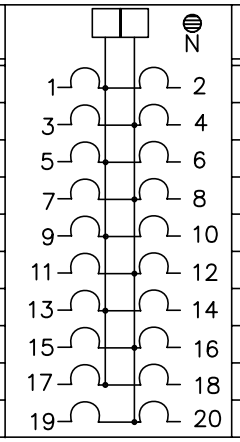

MUNICIPALITY OF ANCHORAGE	SCALE: NTS APPROVED: REVISED: 10/07	**PANEL SCHEDULE FOR WIRING DIAGRAM "G"**	SECTION # 80.14 DETAIL # 80–51

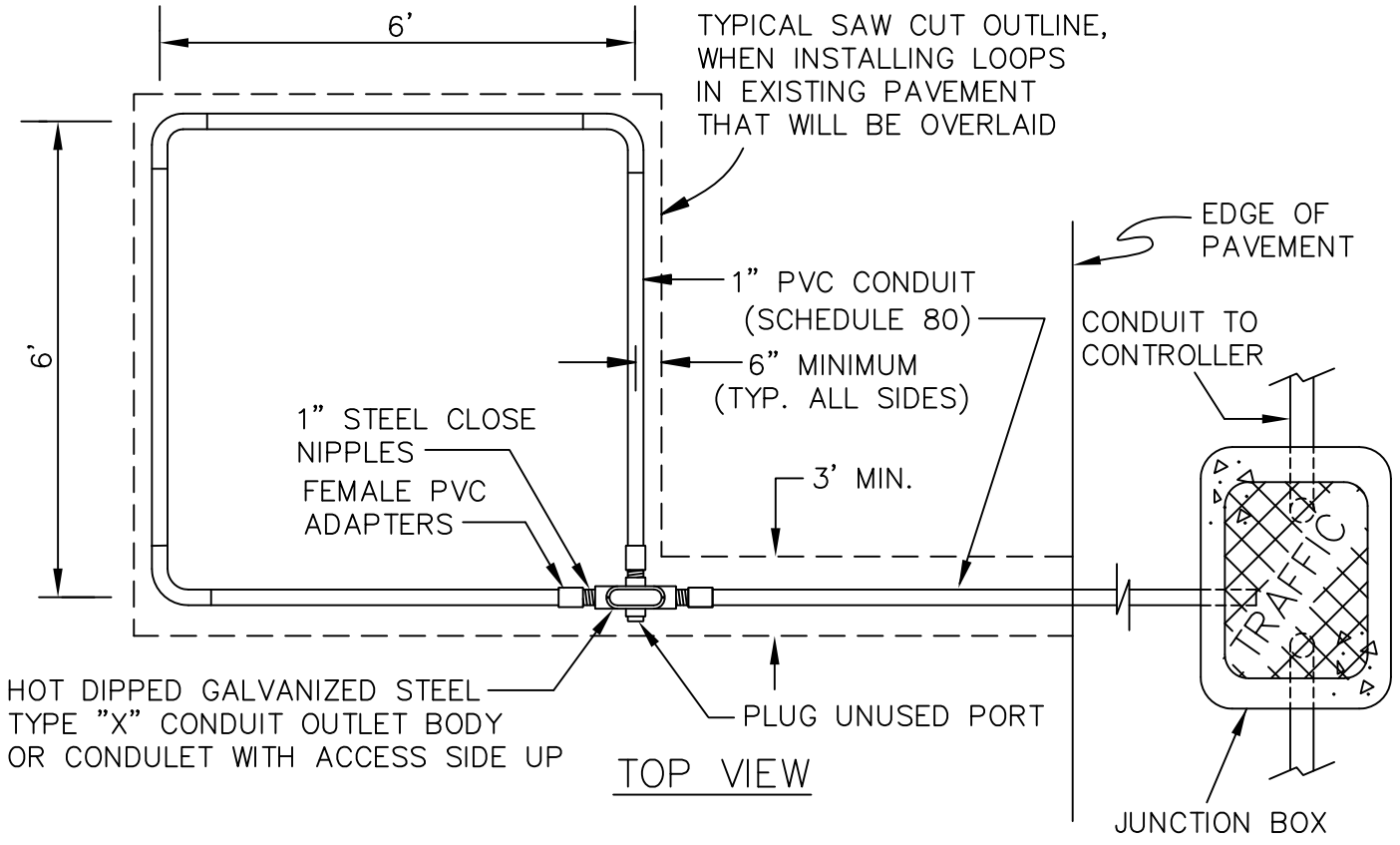

TOP VIEW

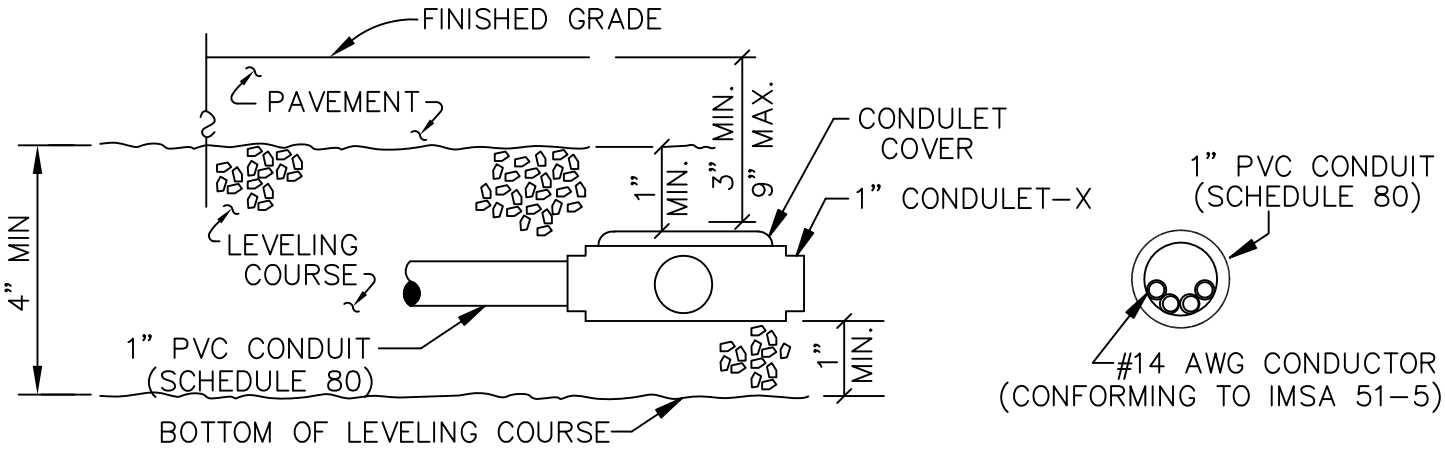

SIDE VIEW

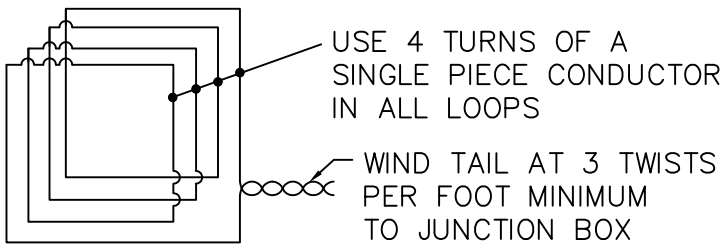

LOOP WIRING DETAIL

REVISION: 12/11 CHANGED DEPTH OF LEVELING COURSE OVER CONDULET COVER TO 1"

MUNICIPALITY OF ANCHORAGE	SCALE: NTS APPROVED: REVISED: 12/11	**CONDUIT ENCASED LOOP DETECTOR**	SECTION # 80.18 DETAIL # 80-52

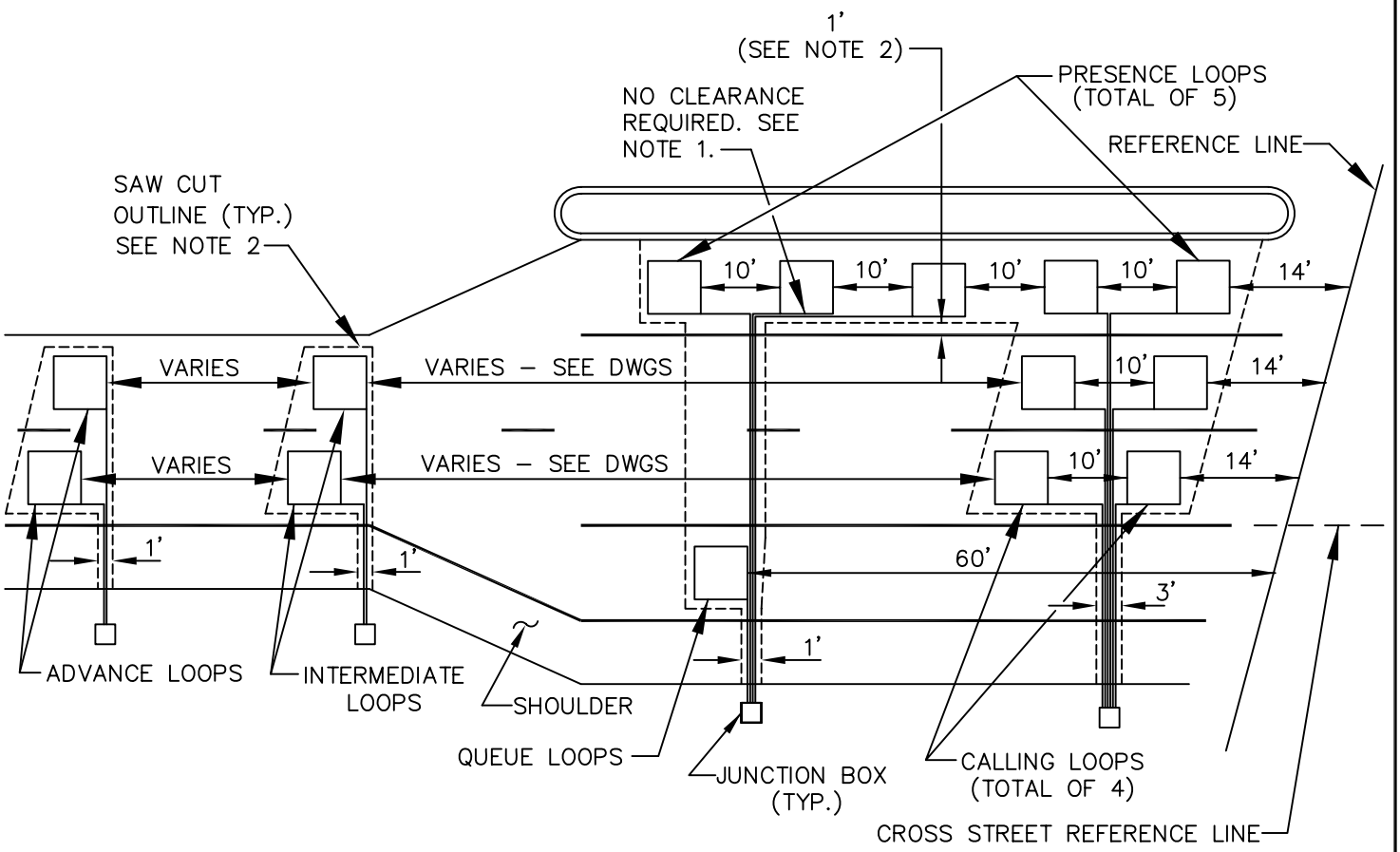

TYPICAL LOOP SETBACKS

MEASURE THE SETBACKS FROM THE REFERENCE LINE
ALONG THE CENTER OF EACH LANE

NOTES:

1. NO MINIMUM CLEARANCE IS REQUIRED BETWEEN A DETECTOR LOOP AND HOMERUN LOOP WIRES OR BETWEEN HOMERUN LOOP WIRES. HOMERUN LOOP WIRES SHALL NOT CROSS LOOP CONDUITS.
2. WHERE EXISTING PAVEMENT WILL NOT BE OVERLAID, ENCLOSE ALL LOOPS THAT ENTER A COMMON JUNCTION BOX WITHIN A TRAPEZOIDAL SAW CUT. CUT TO WITHIN 1 FOOT OF THE LANE AND EDGE LINES, PRESERVING THESE PAVEMENT MARKINGS; REMOVE THE ASPHALT TO THE LIP OF THE GUTTER WHEN THERE ARE NO EDGE LINES. CUT ACROSS LANE LINES WHEN LOOPS IN ADJACENT LANES ARE SIDE BY SIDE. CUT TRENCHES A MINIMUM OF 3 FEET WIDE WHEN INSTALLING LOOP TAILS ACROSS A LANE; CUT TRENCHES A MINIMUM 1 FOOT WIDE WHEN CROSSING A SHOULDER.

MUNICIPALITY OF ANCHORAGE	SCALE: NTS APPROVED: REVISED: 10/07	**LOOP DETECTOR INSTALLATION DETAILS**	SECTION # 80.18 DETAIL # 80–53

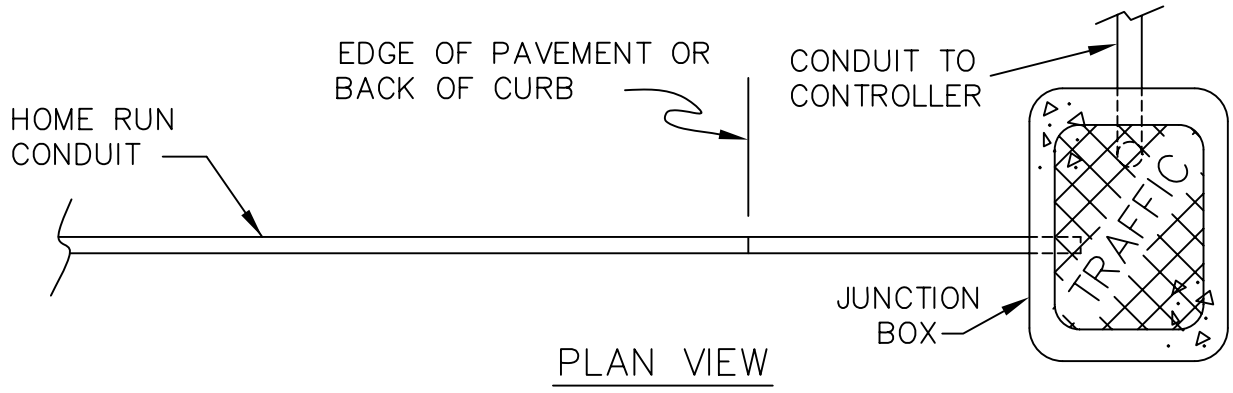

PLAN VIEW

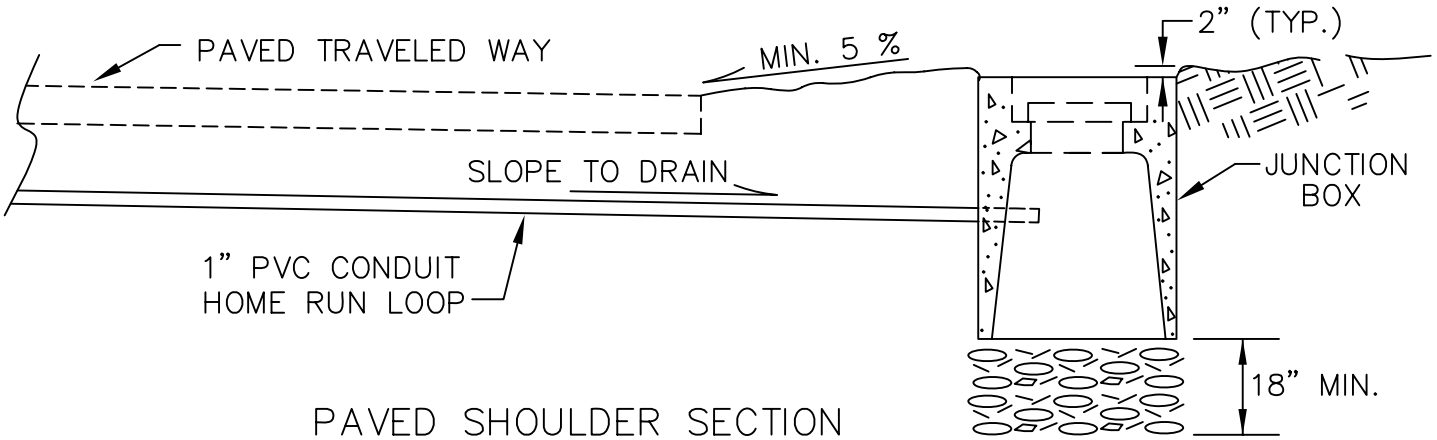

PAVED SHOULDER SECTION

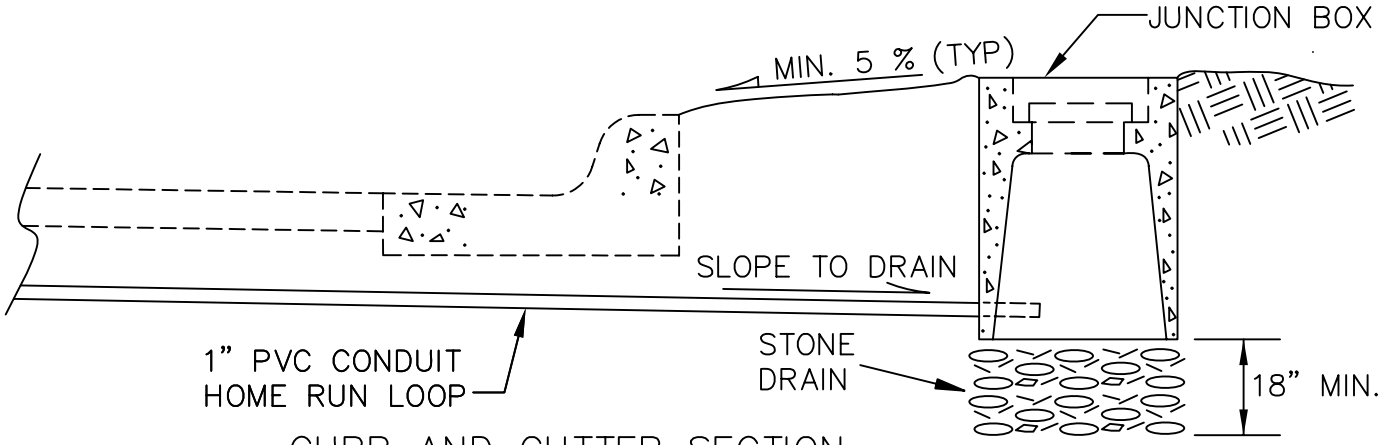

CURB AND GUTTER SECTION

MUNICIPALITY OF ANCHORAGE	SCALE: NTS APPROVED: REVISED: 5/08	**LOOP DETECTOR HOME RUN**	SECTION # 80.18 DETAIL # 80–54

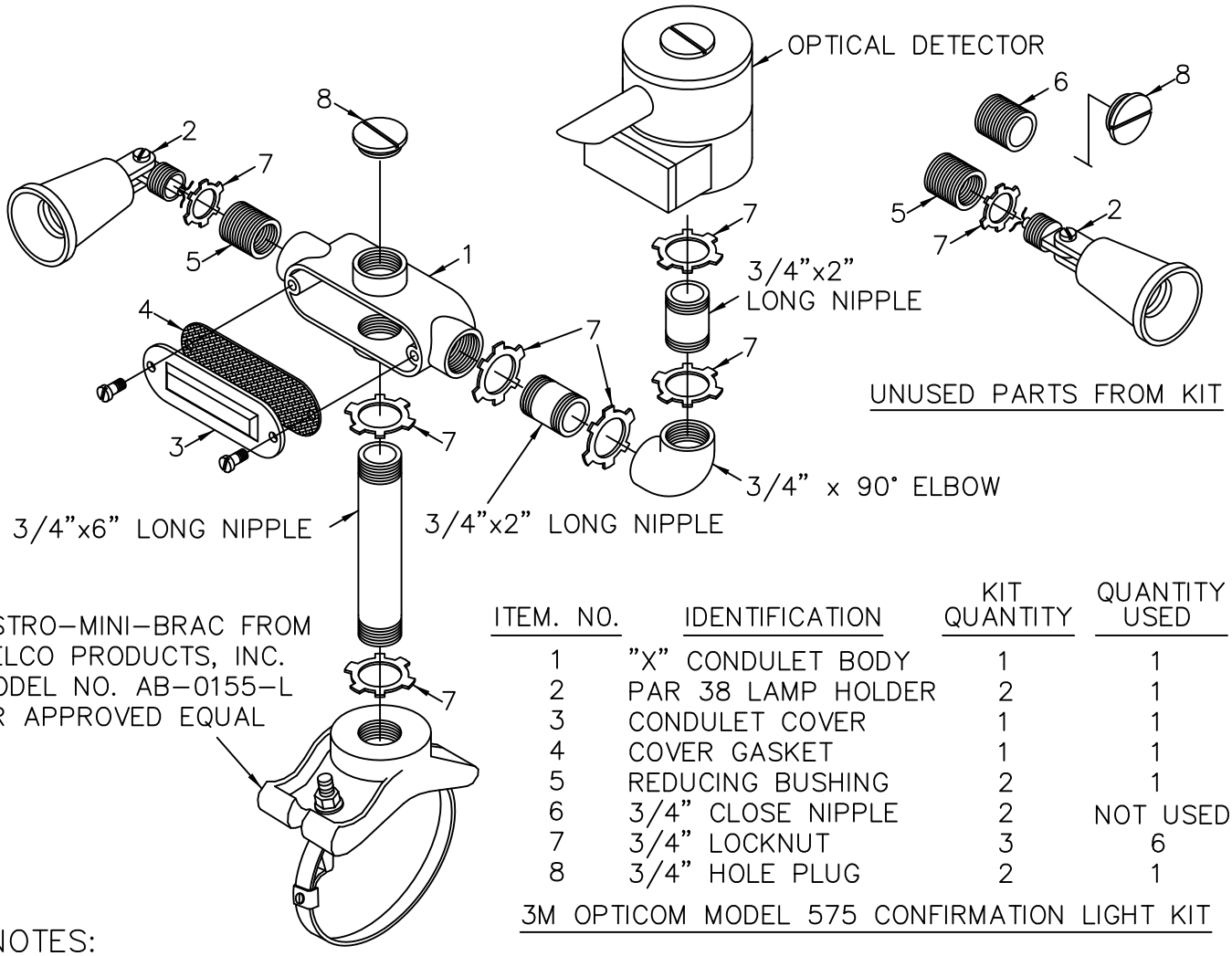

UNUSED PARTS FROM KIT

ASTRO–MINI–BRAC FROM PELCO PRODUCTS, INC. MODEL NO. AB–0155–L OR APPROVED EQUAL

ITEM. NO.	IDENTIFICATION	KIT QUANTITY	QUANTITY USED
1	"X" CONDULET BODY	1	1
2	PAR 38 LAMP HOLDER	2	1
3	CONDULET COVER	1	1
4	COVER GASKET	1	1
5	REDUCING BUSHING	2	1
6	3/4" CLOSE NIPPLE	2	NOT USED
7	3/4" LOCKNUT	3	6
8	3/4" HOLE PLUG	2	1

3M OPTICOM MODEL 575 CONFIRMATION LIGHT KIT

NOTES:

1. SEE THE SIGNAL PLANS FOR THE SIGNAL MAST ARMS SCHEDULED FOR OPTICOM DETECTOR INSTALLATION.
2. FOR EACH OPTICOM INSTALLATION, FURNISH THE FOLLOWING PARTS:
   A. A 3M MODEL 711, 721, OR 722 OPTICOM DETECTOR AS SHOWN ON THE PLANS.
   B. A 3M MODEL 575 CONFIRMATION LIGHT KIT, OR AN APPROVED EQUAL, THAT CONSISTS OF STEEL PARTS WITH A HOT DIP GALVANIZED FINISH.
   C. A 3/4"x6" LONG PIPE NIPPLE, TWO 3/4"X2" LONG NIPPLES, AND A 3/4" 90° PIPE ELBOW. FURNISH PARTS WITH A HOT DIPPED GALVANIZED FINISH.
   D. THREE ADDITIONAL 3/4" LOCKNUTS WITH ZINC PLATED FINISH.
   E. AN ASTRO–MINI–BRAC, MODEL AB–0155–L, MANUFACTURED BY PELCO PRODUCTS, OR AN APPROVED EQUAL.
   F. A 60 WATT, PAR 38, HALOGEN FLOOP LAMP RATED FOR 130 VOLT OPERATION, 1150 INITIAL LUMENS, AND A 3000 HOUR LAMP LIFE.
3. DRILL A 1" HOLE IN THE TOP DEAD CENTER OF THE MAST ARM AT THE OPTICOM DETECTORS PRE–APPROVED LATERAL LOCATION. ASSEMBLE THE PARTS AS SHOWN ON THIS SHEET.
4. BEFORE ATTACHING THE MODEL 138 DETECTOR CABLE TO THE OPTICOM DETECTOR, STRIP THE INSULATION FROM THE THREE INSULATED CONDUCTORS AT THE CONTROLLER CABINET AND ATTACH ALL FOUR CONDUCTORS TO GROUND.

REVISION: 2/2012 DELETED PART 6 & REPLACED WITH TWO 3/4"X2" LONG NIPPLES.

MUNICIPALITY OF ANCHORAGE	SCALE: NTS APPROVED: REVISED: 2/12	OPTICOM DETECTOR INSTALLATION DETAILS	SECTION # 80.18 DETAIL # 80–55

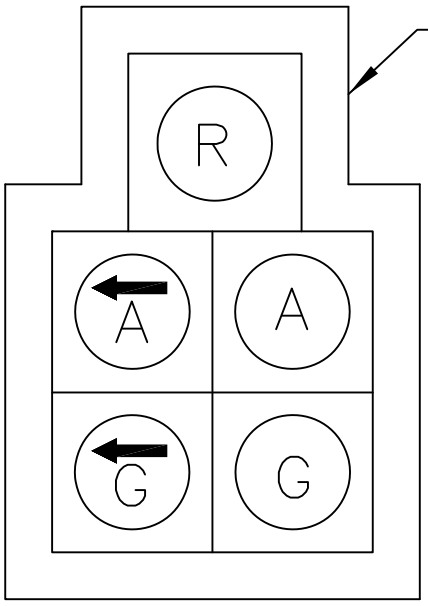

5–LENS HEAD

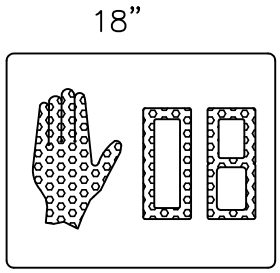

PEDESTRIAN HEAD

NOTES:
1. SIGNAL FACE DIMENSIONS ARE 8" OR 12" AS SPECIFIED IN THE DRAWINGS.
2. PROVIDE LEFT/RIGHT ARROW INDICATIONS, AS INDICATED IN THE CONTRACT DOCUMENTS.
3. ALL VEHICLE SIGNALS SHALL HAVE BACKPLATES.

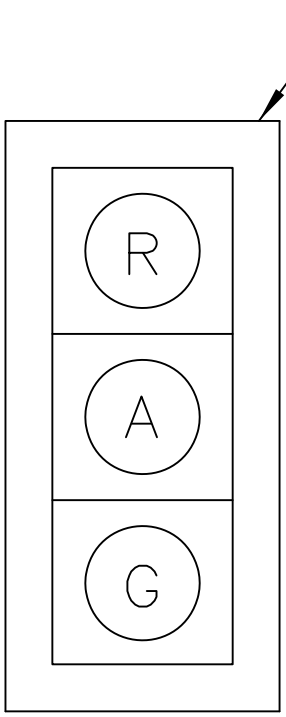

3–LENS HEAD

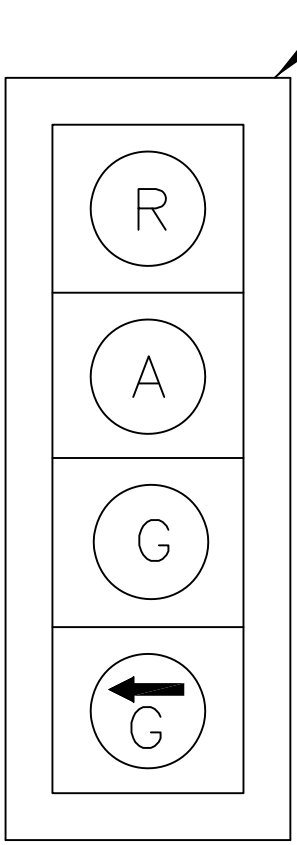

4–LENS HEAD

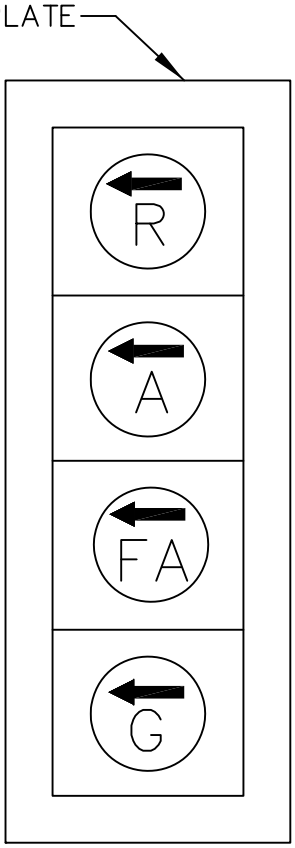

FLASHING YELLOW HEAD

REVISION: 11/2011 FIXED RED IN 5–SECTION HEAD, ADDED FLASHING YELLOW HEAD

MUNICIPALITY OF ANCHORAGE	SCALE: NTS APPROVED: REVISED: 11/11	**SIGNAL HEADS**	SECTION # 80.19 & 80.20 DETAIL # 80–56

SCHOOL FLASHER NOTES:

1. EACH FLASHER SHALL CONSIST OF FOUR SIGNAL FACES WITH YELLOW LENSES AND TUNNEL TYPE VISORS WITH OPEN SLOTS AT THE BOTTOM.
2. THE CONTRACTOR SHALL WIRE SIGNAL FACES 1 AND 2 ON FLASHER CIRCUIT 1 AND SIGNAL FACES 3 AND 4 ON FLASHER CIRCUIT 2.
3. BEACON FRAMEWORK

ITEM NO.	IDENTIFICATION	QTY.
A	1–1/2" 90° SERRATED ELBOW	2
B	1–1/2" TEE	1
C	1–1/2" x VARIES NIPPLE	1
D	1–1/2" x VARIES NIPPLE	2
E	1–1/2" LOCK NIPPLE	2

4. YELLOW SIGNAL FACE:
   12" (POSTED SPEEDS ≥ 40 MPH)
   8" (POSTED SPEEDS ≤ 30 MPH)
   FOR 35 mph SIGNAL FACE SIZE REQUIRES DISCRETION OF ENGINEER.

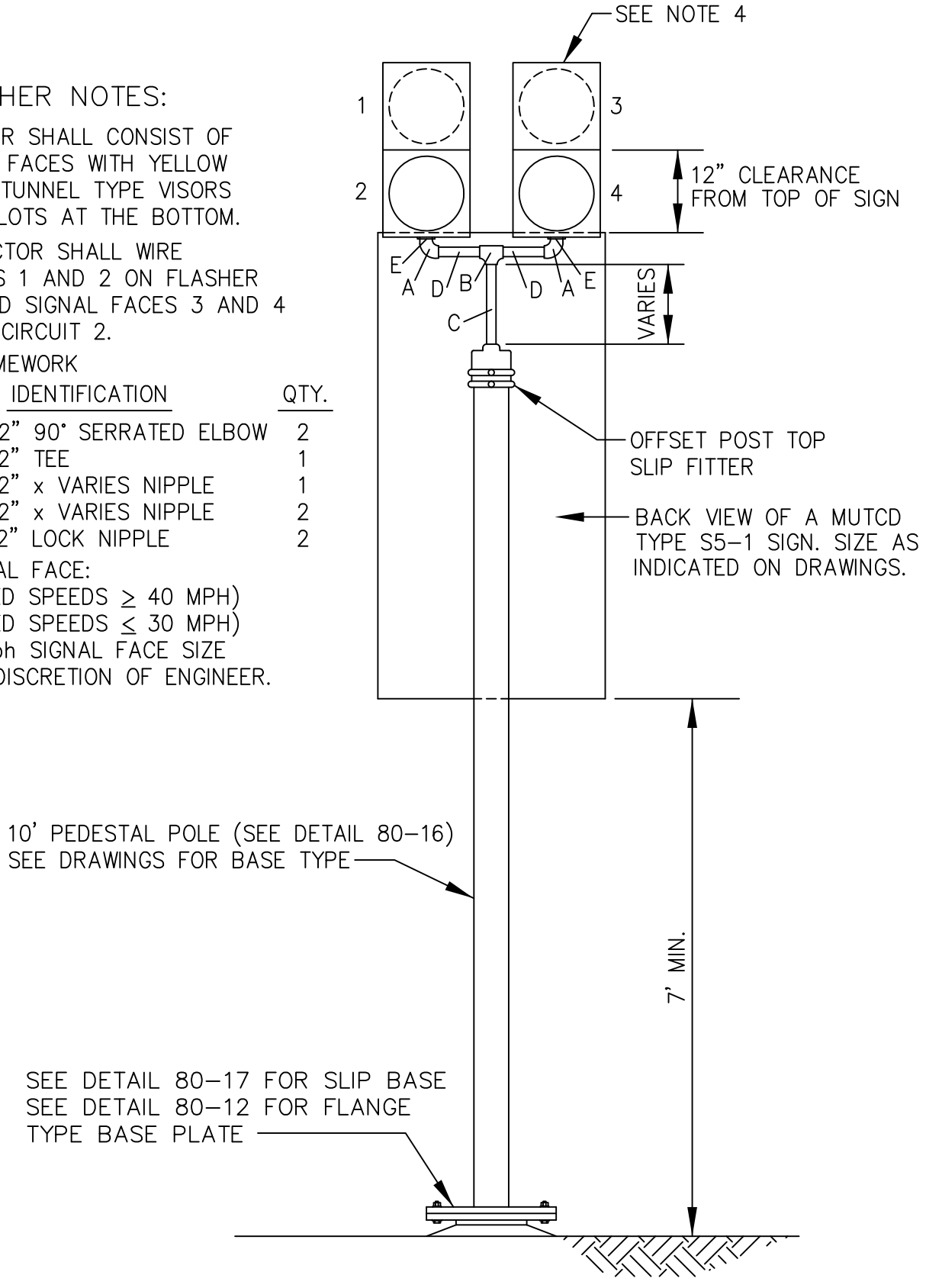

REVISION: 2/2012 REMOVED 12" HEAD LANGUAGE IN NOTE 1.

MUNICIPALITY OF ANCHORAGE	SCALE: NTS APPROVED: REVISED: 2/12	SPEED LIMIT SIGN BEACON	SECTION # 80.22 DETAIL # 80–57

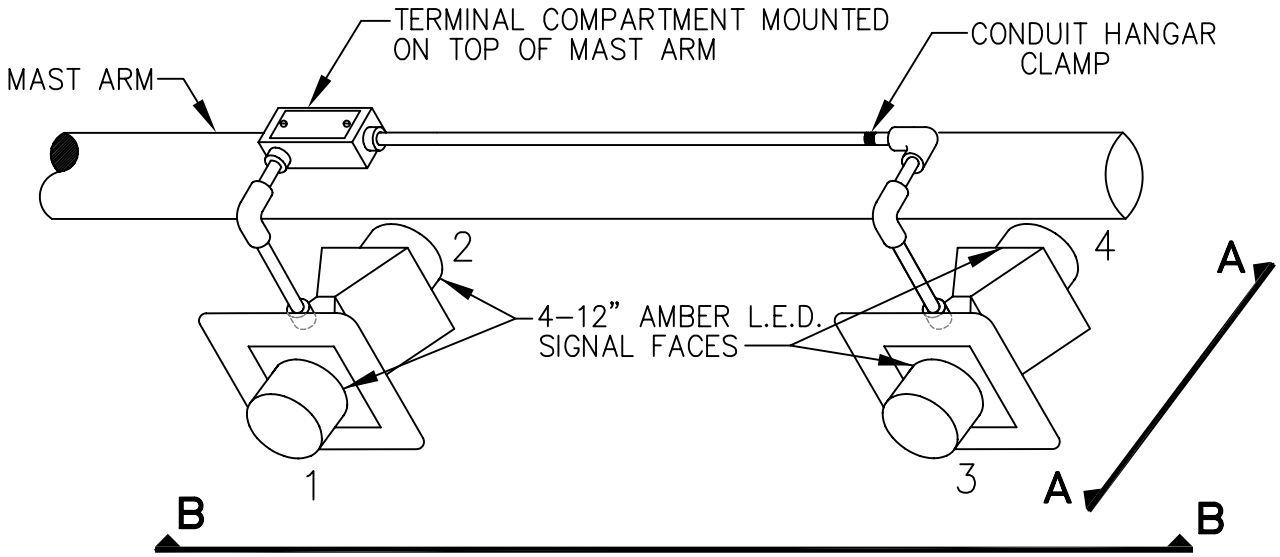

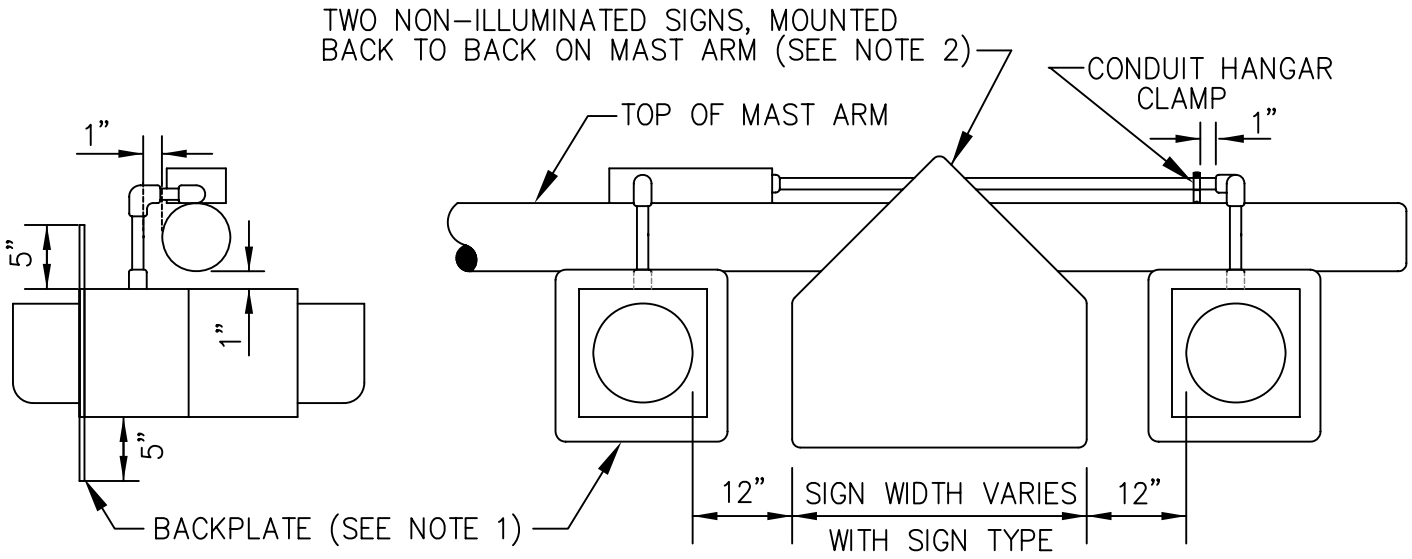

SECTION AA

SECTION BB

NOTES:

1. PROVIDE ALL SIGNAL HEADS WITH 5" BACKPLATES.
2. CONTACT MOA SIGN SHOP FOR MOUNTING METHOD.
3. PROVIDE MINIMUM VERTICAL CLEARANCE OF 18' FROM ROADWAY TO BOTTOM OF SIGNAL HEAD HOUSING OR BOTTOM OF SIGN.
4. WIRE SIGNAL FACES 1 AND 2 ON FLASHER CIRCUIT 1 AND SIGNAL FACES 3 AND 4 ON FLASHER CIRCUIT 2.
5. EACH UNIT SHALL CONSIST OF FOUR 12–INCH AMBER L.E.D. SIGNAL FACES AND TUNNEL TYPE VISORS WITH OPEN SLOTS AT THE BOTTOM.

MUNICIPALITY OF ANCHORAGE	SCALE: NTS APPROVED: REVISED: 5/08	MAST ARM MOUNTED SIGN BEACONS	SECTION # 80.22 DETAIL # 80–58

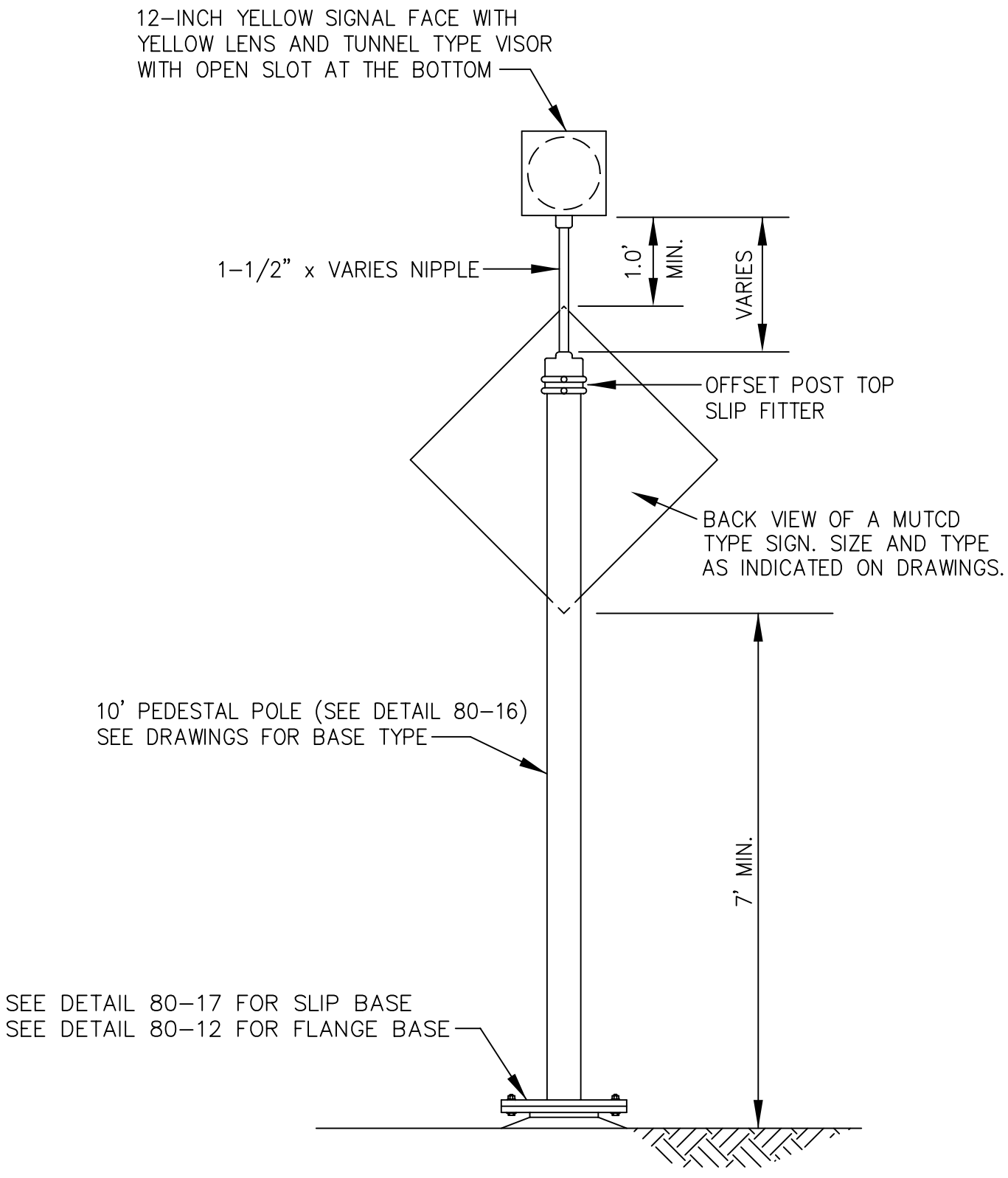

MUNICIPALITY OF ANCHORAGE	SCALE: NTS APPROVED: REVISED: 10/07	**WARNING SIGN BEACON**	SECTION # 80.22 DETAIL # 80–59

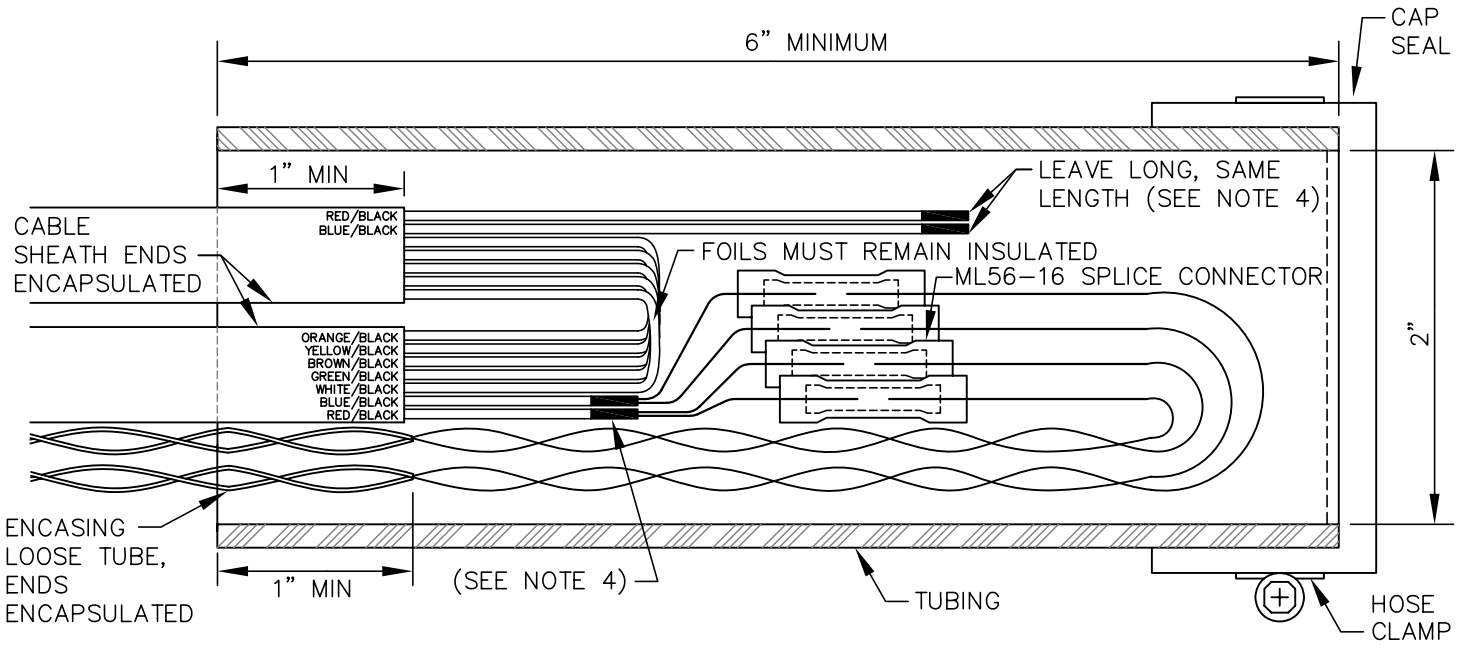

MATERIAL PROPERTIES	
LOOP LEAD-IN SPLICE	
TUBING	2" CORE FLOW
CAP SEAL	FERNCO QWIK CAP #QC-102
HOSE CLAMP	STAINLESS STEEL
SPLICE CONNECTOR	MULTILINK ML56-16 OR APPROVED EQUAL
COMPOUND	RE-ENTERABLE ENCAPSULATION

NOTES:

1. FABRICATE LOOP LEAD-IN SPLICE IN THE FIELD AS SHOWN.
2. CAP SEAL ONE END AND COMPLETELY FILL OPEN END WITH RE-ENTERABLE ENCAPSULATION COMPOUND TO EDGE OF CORE FLOW.
3. LEAVE A MINIMUM OF 1/2" CLEARANCE BETWEEN THE ENCLOSURE AND THE SPLICE AT BOTH ENDS OF THE CORE FLOW.
4. EXPOSED FOIL AND DRAIN WIRES, SEAL WITH HEAT SHRINK TUBING (TYP).
5. SECURE CABLE/CONDUCTOR BUNDLE WITH NYLON CABLE TIES.

MUNICIPALITY OF ANCHORAGE	SCALE: NTS APPROVED: REVISED: 7/08	SPLICE DETAIL LOOP DETECTOR LEADS	SECTION # 80.48 DETAIL # 80-60

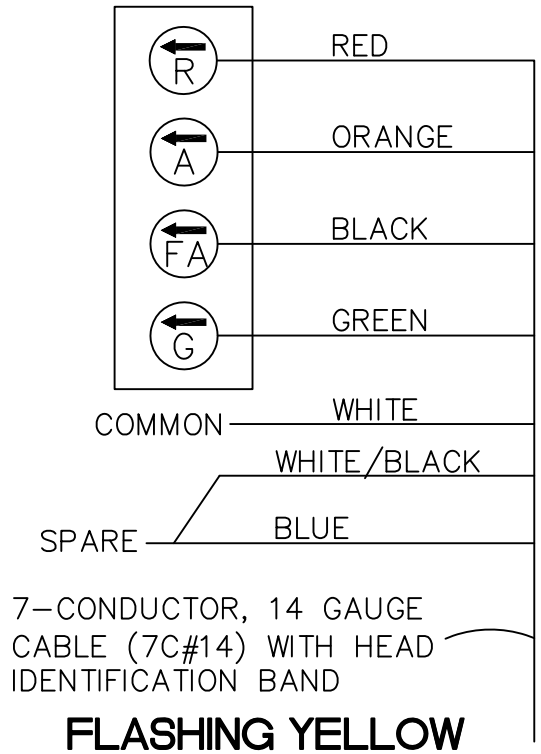

FLASHING YELLOW HEAD

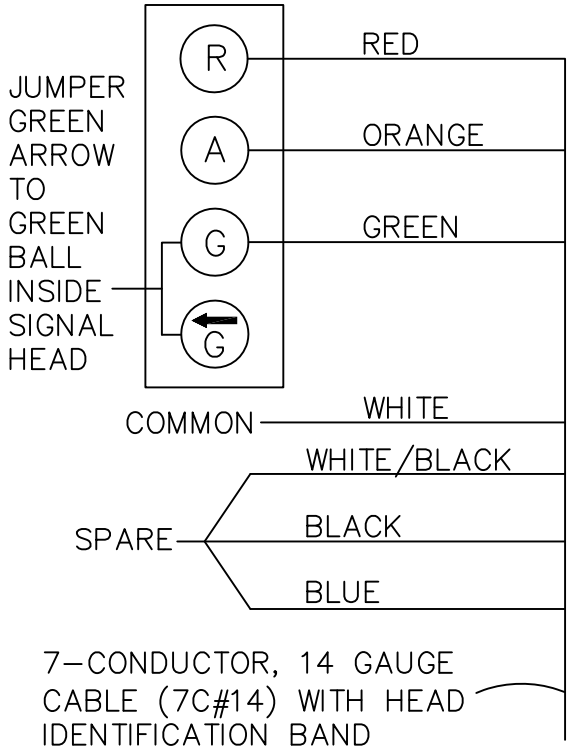

4 SECTION HEAD

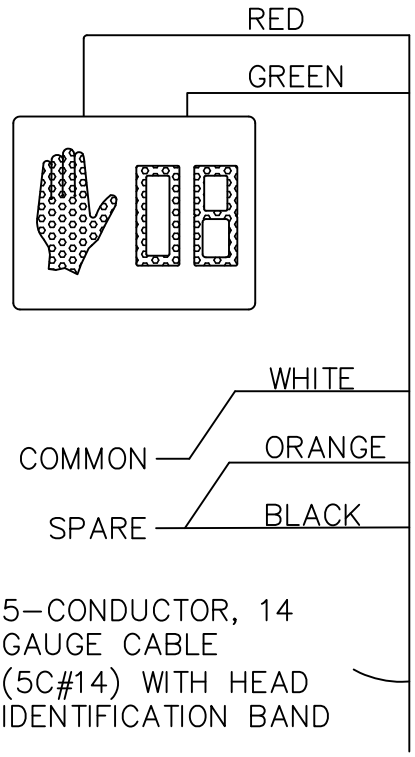

PEDESTRIAN HEAD

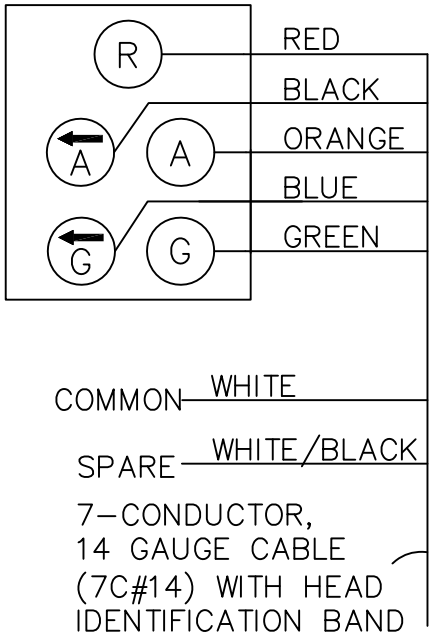

5 SECTION HEAD

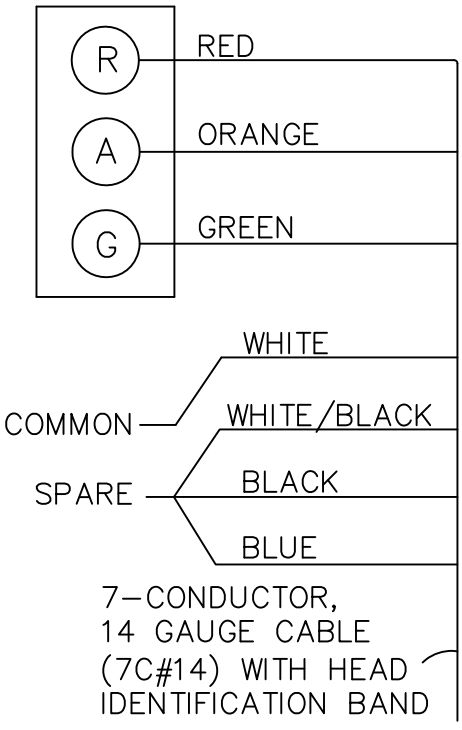

3 SECTION HEAD

REVISION: 2/2012 ADDED FLASHING YELLOW HEAD DIAGRAM.

MUNICIPALITY OF ANCHORAGE

SCALE: NTS

APPROVED:

REVISED: 2/12

SIGNAL HEAD WIRING DETAILS

SECTION # 80.19& 80.20

DETAIL # 80-61

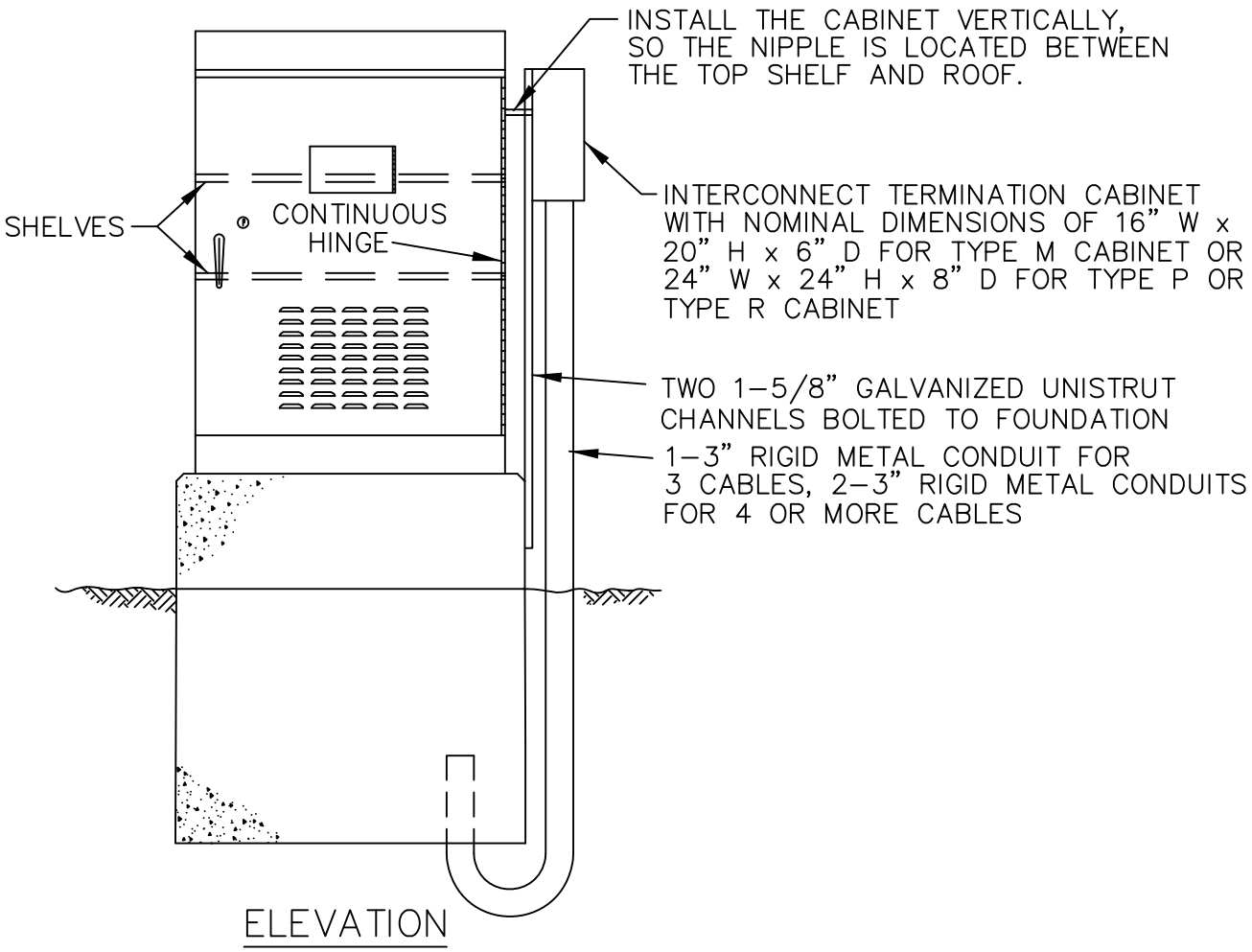

ELEVATION

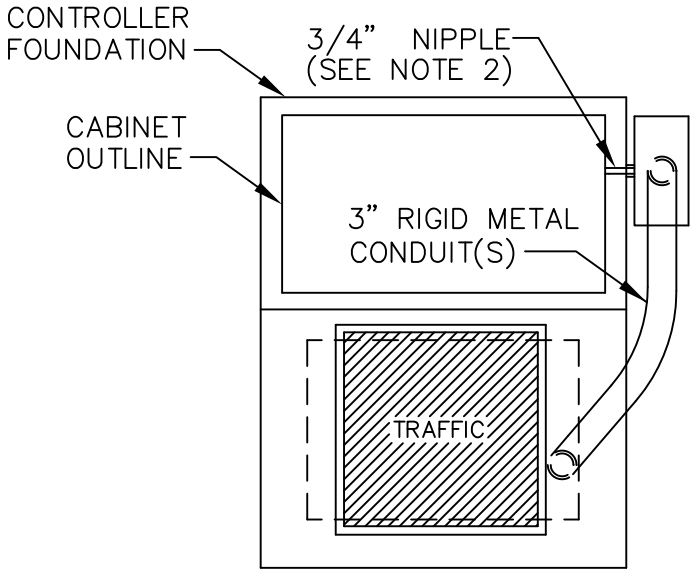

PLAN VIEW

NOTES:

1. INSTALL THE INTERCONNECT CABLE TERMINATION CABINET WHEN CALLED FOR IN THE DRAWINGS OR WHENEVER 3 OR MORE INTERCONNECT CABLES ARE TO BE TERMINATED.
2. COORDINATE INSTALLATION LOCATION OF 3/4" NIPPLE WITH MOA TRAFFIC SIGNAL ELECTRONICS, PRIOR TO DRILLING HOLE IN CABINETS.
3. SEE DRAWINGS TO DETERMINE WHETHER TO INSTALL ON RIGHT OR LEFT SIDE WALL OF CONTROLLER CABINET.
4. DRILL HOLE IN STANDOFF MOUNTED BACK PANEL TO PROVIDE UNIMPEDED ACCESS TO NIPPLE FOR CABLE ROUTING. COORDINATE LOCATION WITH MOA TRAFFIC SIGNAL ELECTRONICS PRIOR TO DRILLING HOLE.

REVISION: 1/13 1/2" NIPPLE TO 3/4" NIPPLE, EDITED NOTE 4

MUNICIPALITY OF ANCHORAGE	SCALE: NTS APPROVED: REVISED: 1/13	# INTERCONNECT CABLE TERMINATION CABINET	SECTION # 80.26 DETAIL # 80-62

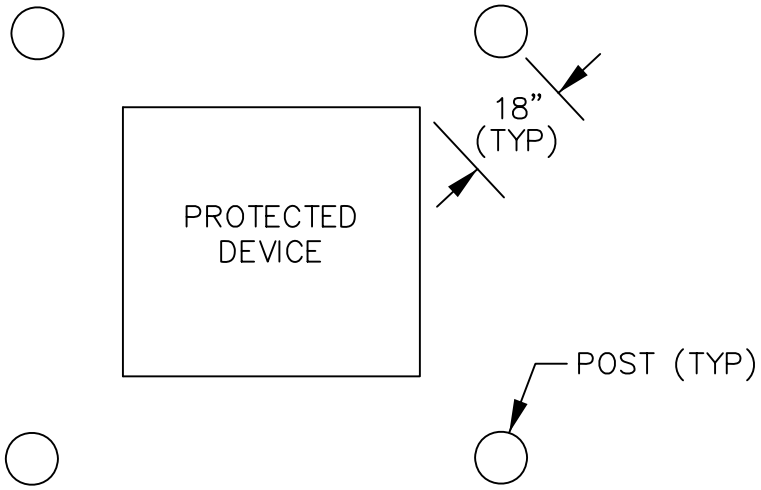

PLAN

LOCATE POSTS AS SHOWN

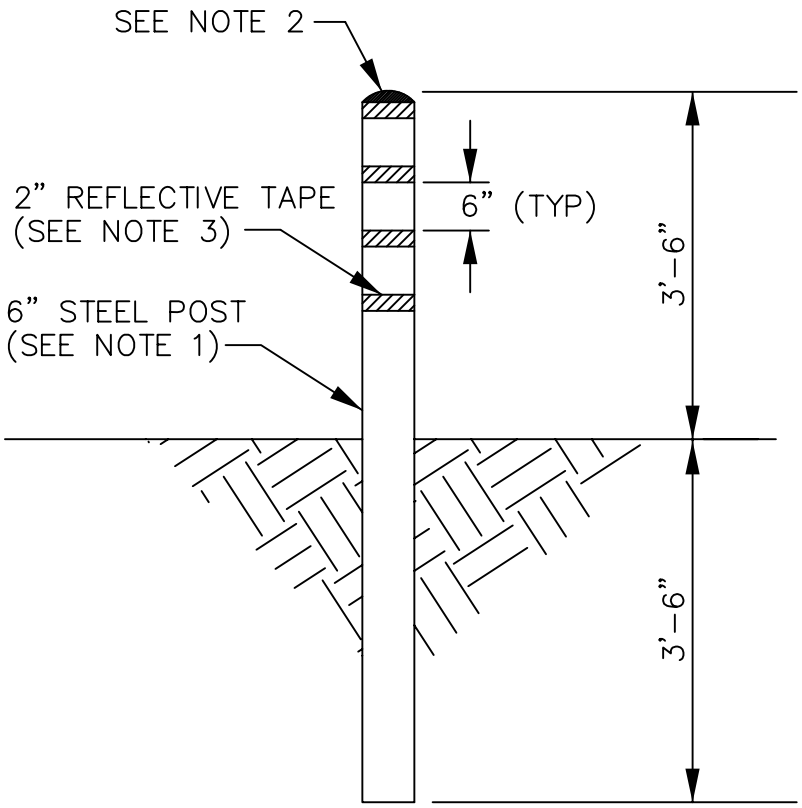

POST DETAIL

NOTES:

1. PROVIDE 6" STEEL, SCHEDULE #40 PIPE, FILLED WITH CONCRETE.
2. ROUND CONCRETE AT TOP OF POST SMOOTH AND PAINT YELLOW.
3. INSTALL 4–2" BANDS OF YELLOW REFLECTIVE TAPE AS SHOWN.
4. LOCATION AND QUANTITY OF POSTS AS INDICATED ON DRAWINGS.

MUNICIPALITY OF ANCHORAGE	SCALE: NTS APPROVED: REVISED: 10/07	**PROTECTIVE POST ASSEMBLY**	SECTION # 80.28 DETAIL # 80–63