Status of Proposed Development Projects in Girdwood

Updated 4/18/2025

Description	Location	Developer	Status	Link	Public Comments or Hearing	MOA Process
Holtan Hills	North of Girdwood School	CY Investments	Land transferred and platted. Awaiting community meeting and PUD application.		Not yet scheduled	Expecting Conditional Use / Planned Unit Development application in spring 2025
Alyeska Village phases 1-3	Alyeska Resort	Pomeroy	Approved Area Master Plan and Phase 1 Development Master Plan. Army Corps permit POA-2023-00473		None	DMP for phases 2 & 3 will require PZC public hearing
Glacier Creek Village phase 4	North of Girdwood Airport	Pomeroy	Part of approved Alyeska Resort Area Master Plan. On land curently owned by HLB/MOA		Condiditions on land transfer may be added to HLB work plan. Public hearing at May 20 Assembly	Any future disposal will have public hearings at HLB Advisory Committee and must be approved by Assembly after additional public hearing
Remote Avalance Mitigation storage & heliport	Old Gravel Pit @ Seward MP89	AK DOT	Application delayed until adoption of Girdwood Comprehensive Plan.		Future public hearings at Planning & (likely) Assembly	Expecting re-zoning application in Early 2025
Alpenglow Mixed-Use	204 Hightower Rd	Girdwood Building Company, LLC	Planning application 2025-0038 PZC public hearing scheduled		PZC public hearing on May 5	Application for Development Master Plan
Hotel & Retail Store	Off Alyeska Hwy behind Brewery	Glacier View LLC (Tim Cabana)	GBOS considering making a request for a code change to allow retail uses in gC-10.		Future Public Hearings at PZC and Assembly	Requires a change in Title 21 Chapter 09 Use Table to allow retail. Will need Planning and Zoning Commission review plus Assembly action
Cabin condo development	Off Alyeska Hwy east of bridge	Spinell Homes	Planning case 2025-0035 Administrative review held on April 18 - result TBC		None	Depends on outcome of administrative review
ENSTAR gasline	Between wastewater plant and Virgin Crek Drive	ENSTAR	DNR issued permit for Section Line Easement. Permit on appeal.		None	No MOA involvement
Lodge and associated facilities	Girdwood Airport - north	Glacier Valley Lodge LLC	Land lease only approved by AK DOT in April 2024. Construction will require separate DOT Airport Building Permit.		Requires DOT permit (no hearing) & MOA permit*/hearings before improvements	*State and MOA have contradictory legal opinions of need for MOA permits
Potential helicopter operation	Girdwood Airport - south	Silverton Mountain Guides	Lease awarded for Parcel H.		Requires DOT permit (no hearing) & MOA permit*/hearings before improvements	See note above
New water system wellhouse	Immediately north of Glacier Creek Bridge	AWWU	Initial design		Future hearings at HLB Advisory Commission and Assembly	Any future disposal will have public hearings at HLB Advisory Committee and must be approved by Assembly after additional public hearing
Alyeska-Seward Highway Intersection	Alyeska-Seward Hwy junction	AK DOT	Initial concept design. CSS approved by MOA. On hold awaiting future funding (STIP anticipates 2029 or later)		Future hearings including HLB land disposal and others	Using Context Sensitive Solution (CSS) process

Girdwood Wildfire Mitigation Days

FREE BRUSH (BRANCH) CHIPPING

FRIDAY, JUNE 6
10 a.m. - 1 p.m.
SATURDAY, JUNE 7
10 a.m. - 2 p.m.

GIRDWOOD PARK & RIDE
Corner of Girdwood Place & Holmgren Avenue

- No logs or construction wood
- Live hardwood branches will go to the Alaska Wildlife Conservation Center (AWCC) for animal browse
- Wood chips will be used at Forest Fair (Girdwood) Park

Girdwood Wildfire Partnership

CHUGACH · GIRDWOOD FIRE DEPT · AFD WILDFIRE DIVISION · ALASKA DIVISION OF FORESTRY & FIRE PROTECTION · GIRDWOOD PARKS AND RECREATION · ALASKA WILDLIFE CONSERVATION CENTER

MUNICIPALITY OF ANCHORAGE
GIRDWOOD ROADS, FACILITIES, PARKS & RECREATION

7DATE: May 19, 2025

TO: Girdwood Board of Supervisors

FROM: Kyle Kelley, Girdwood Service Area Manager & Margaret Tyler, Parks and Recreation

SUBJECT: **Roads, Facility, Cemetery & P & R Monthly Report**

Summer is here! Our parks caretakers, Luke and John, are hard at work in the parks. Already this year they have completed season cleanup, replaced a bridge in the park and painted the new dugouts. All of our summer services are in place. If you see anything that needs attention, please contact Kyle kelleykt@muni.org or Margaret tylerms@muni.org.

Cory is our campground host this summer. He'll be in the park mid-May thru mid-September overseeing campground and park activities.
Our summer turf contract begins mid-May. Contract to work on invasive weeds does not include spraying.

Girdwood Parks Master Planning is kicking off with Huddle AK. Project website is **www.girdwoodparksplan.com**.

GVSA parks/rec projects slated for 2025 are:

- Bridge replacement over California Creek adjacent to Town Square Park/Crow Creek Road funded by private donation.
- Tread work on Virgin Creek Falls Trail funded by private donation assisting with YEP crew.
- Trail work and trailhead signage on the Lower Virgin Creek Trail (a social trail that connects Virgin Creek Road to Danich Trail).
- Bidding for Suspension bridge to replace the Hand Tram funded by a variety of sources. Build expected in 2026 to provide time for material acquisition.
- Tread and drainage work on the Middle Iditarod National Historic Trail between the school and USFS Boundary co-funded by GVSA and RTP Grant
- Construction of a pavilion in Lions Club Park, co-funded by GVSA, Lions Club, private donations and LWCF grant.
- Study storm damage to the Beaver Pond Trail.

Trails: Trails Committee is working on updating the winter map and Girdwood Trails Management Plan.

Parks & Amenities:

- *Campground:* Tent campground opening for the season this week.
- *Annual Beautification*: Flowers arrive end of May, Volunteers will plant June 4 and 5.
- *Playground:* Open.
- *Lions Club Park:* Working on pavilion, see Grants, below
- *Disc golf:* Open.
- *Library/Community Center:* Library is open TUE-SAT 10-6
- *Tennis Courts:* Wind screens and nets are in place.
- *Soccer field:* Open but always take a while to dry out.
- *Sladen J Mohl Ball Field:* Open! New dugouts look amazing!
- *Skate Park*: open. Thank you to Clint for building the new battleship!

Reminder: No dogs on the baseball field, playground, tennis courts, and skate park.

GBOS Non-profit Grants: The 2024 grants have been completed. The 2025 grants are all with MOA for processing and payment.

Other Grants:

Land and Water Conservation Fund (LWCF) Grant –GVSA attended info session on LWCF in preparation to work on the grant for the Lions Club Park Pavilion. Match is 1:1. LWCF grant request is $103,737.00 for a project costing $207,474.00. This project has been accepted by the National Park Service and may begin in the next construction season, grant must be wrapped up by 2027.

Recreational Trails Program Grant (RTP): GVSA/GTC opted not to apply for 2025 RTP grant due to a number of factors, including the anticipated steel package unlikely to meet Federal Buy American Steel waiver. In 2024 GTC/GVSA was awarded RTP funding for the Middle Iditarod National Historic Trail, match is 90:10 with match coming from GTC and MOA funds. RTP grant request is $179,745.00, match is $19,970.00 for a project costing $199,715.00. This project was delayed in contracting in 2024. SOA is now completing the contracting phase, project will begin in spring 2025.

Rasmuson Foundation: GVSA received $250,000 Tier 2 Grant to assist with construction of the suspension bridge to replace the decommissioned hand tram.

National Forest Foundation: GVSA has completed application through the National Forest Foundation of approximately $220,000 for the bridge to replace the hand tram.

Alaska Community Foundation: Girdwood Parks and Rec applied for Trail Care grant and was awarded $1000 for trail backpack and chainsaw for trail work. Grant will be closed upon purchase and reimbursement and a final report will be completed.

Social Media & Websites: GBOS, committee and sub-committee meetings are now available on a calendar view. Go to www.muni.org/gbos/events and see what meetings are coming up! GBOS videos are on line! Follow the link on our website to our YouTube videos or copy this: https://www.youtube.com/channel/UCOUlNInprZEjhbpVPiJOlEA

We are active on Facebook as Girdwood Board of Supervisors. GVSA Websites are:

GBOS: www.muni.org/gbos
LUC: www.muni.org/gluc
GTC: www.muni.org/gtc
PSAC: www.muni.org/gpsac
GHEC: www.muni.org/gbos-ghec
Cemetery: www.muni.org/gc
Parks and Rec:www.muni.org/gpr.
Girdwood Trails Plan: www.muni.org/gtp

Links and info:
Sen. Cathy Giessel's weekly newsletter: Signup Form (constantcontactpages.com)
Information on the ASD activities is available here: Anchorage School District / Anchorage School District Homepage (asdk12.org)
Anchorage Assembly: Assembly Home
Heritage Land Bank information: www.Muni.org/HLB

Roads

Road Status: Spring is here, and so is spring road work. Western has started the spring with road and drainage improvements in Old Girdwood and is currently working on spring grading of all dirt roads in Girdwood. Calcium Chloride will be added to the streets after grading to help with dust suppression for those warm and sunny days coming. All asphalt streets and pathways managed by GVSA have been swept and vacuumed of winter sanding and cleaned. After spring operations are completed, we move into summer maintenance projects that will span the summer and be completed as funding allows.

Major project updates:

Ruane Road fish passage culvert replacement. We've secured funding for this project, along with AWWU funding for Girdwood improvements, which the EPA is managing. We received an EPA grant agreement this week, and it is currently undergoing legal review for approval to accept. As soon as the MOA agrees to the grant agreement, we'll initiate the process to select a design firm to engineer the new fish passage box culvert, to construct it in 2026. The funding designated for the project is $1.6 million, and it will require a 20% match.

Davos Road Fish culvert @ Alyeska Creek: The new fish culvert at Davos Road and Alyeska Creek has completed construction bidding, and Caliber Construction out of Anchorage won. Caliber has been given early approval to remove trees in the construction zone to comply with the bird nesting restriction that begins in May. They will return in July after Forest Fair, when lower water conditions allow the culvert replacement and lowering of the waterline to start.

Summer Maintenance Projects with Western Construction: Starting late in April, Girdwood streets will move to summer maintenance, with winter cleanup of all paved streets and grading/compacting all gravel roads and moving into summer projects with Asphalt and gravel road improvements, drainage improvements, and brushing.

Expenses and Budget:

Girdwood Valley Service Area 2025 Mill Rate: 5.61 of 6 mills

Roads: Road Expenditures by Month:

Month	2023	2024	2025
January	$62,791.19	$51,162.50	$29,666.25
February	$32,793.17	$50,612.50	$34, 533.25
March	$45,857.72	$96,425.00	
April	$31,161.25	$60,296.50	
May	$34,288.75	$33,003.75	
June	$20,791.25	$35,861.50	
July	$173,075.00	$7,143.75	
August	$146,100.00	$51,086.42	
September	$22,991.00	$9,553.75	
October	$10,090.50	$20,370.00	
November	$55,686.25	$16,982.50	
December	$66,042.50	$22,993.75	
Total thru December:	$701,668.85	$455,492.25	$64,199.50

Public works operation 2025 budget expended: $223,915.22 of $1,612,732.00 =14%
2025 Capital Roads Project fund available (406): $300,000.00
2025 Davos Fish Culvert Project: $894,164.16

Parks:

2025 Expended Budget: $27,053.47 of $848,385.00=03%
2025 Capital Park Project (406) Reserve Fund available: $840,830.82
2025 Winner Creek Trail Suspension Bridge funds = $357,068.70
2025 Winner Creek Trail Suspension State Grant Funds = $1,200,000.00
2025 Community Room Capital Reserve Fund (406): $47,896.12

Police:

2025 Expended Budget: $205,476.88 of $817,409.00 = 25%

Fire:

2025 Expended Budget: $644,422.50 of $1,954,917.00= 32%
2025 Fire Undesignated Capital fund (406) = $223,317.20

Housing and Economic Fund:

2025 Expended Budget: $0.00 of $117,600.00 = 0%

Other:

Meetings to schedule:

GBOS 2026 budget work sessions (x2 or 3) (mid-July & mid-Aug)
Budget complete for vote at Sept 15 GBOS meeting
GBOS Rules & Procedures Part 2 September

Municipality of Anchorage

P.O Box 390
Girdwood, Alaska 99587
http://www.muni.org/gbos

Suzanne LaFrance Mayor

GIRDWOOD VALLEY SERVICE AREA BOARD OF SUPERVISORS
Mike Edgington & Jennifer Wingard, Co-Chairs
Briana Sullivan, Brian Burnett. Kellie Okonek

Resolution 2025-08
Of the Girdwood Board of Supervisors

Support for Transfer of Parcel 6-134 from HLB to Girdwood Parks and Recreation

WHEREAS, Anchorage Parks and Recreation and the subset Girdwood Parks and Recreation is a department of the Municipality of Anchorage and is able to manage municipal land; and

WHEREAS, Girdwood Parks and Recreation manages other lands within Girdwood and is funded by Girdwood Valley Service Area property taxes for the benefit of the community as a whole; and

WHEREAS, transfer of parcel 6-134 from Heritage Land Bank to Girdwood Parks and Recreation will allow the Girdwood Valley Service Area to invest local tax funds in a feasibility study, infrastructure and development that have been requested by the community, including development of an RV park; and

WHEREAS, request of this transfer is supported by the Girdwood Housing and Economic Committee, the Girdwood Land Use Committee; and

WHEREAS, transfer of Parcel 6-134 is consistent with the HLB Annual Work Plan and with the newly adopted Girdwood Comprehensive Plan.

THEREFORE the Girdwood Board of Supervisors resolves its support for HLB transfer of management authority of Parcel 6-134 from Heritage Land Bank to Girdwood Parks and Recreation.

Passed and approved by the Girdwood Board of Supervisors by a vote of xx in favor and xx opposed on this 19st day of May 2025.

Mike Edgington/Jennifer Wingard
GHEC/LUC Supervisor, GBOS Co-Chair

Attest

Municipality of Anchorage

P.O Box 390
Girdwood, Alaska 99587
http://www.muni.org/gbos

Suzanne LaFrance Mayor

GIRDWOOD VALLEY SERVICE AREA BOARD OF SUPERVISORS
Mike Edgington & Jennifer Wingard, Co-Chairs
Briana Sullivan, Brian Burnett. Kellie Okonek

Resolution 2025-07
Of the Girdwood Board of Supervisors

Support for Site Plan for a Pavilion in Lions Club Park

WHEREAS, Planning Case 2025-0064 Administrative Site Plan Review for pavilion construction in Lions Club Park in Girdwood is scheduled for decision June 13, 2025; and

WHEREAS, the effort to build pavilion has been supported within the community and by the Girdwood Turnagain Arm Lions Club for many years; and

WHEREAS, approval of the Site Plan will allow the Girdwood Valley Service Area to move forward with planned construction, perhaps as early as Summer 2025.

THEREFORE the Girdwood Board of Supervisors resolves its support for the Case 2025-0064, Administrative Site Plan for a pavilion to be located in Girdwood Lions Club Park, Lot 3, Block 1, First Addition Girdwood Townsite, Alaska Subd. (Plat 66-76)

Passed and approved by the Girdwood Board of Supervisors by a vote of xx in favor and xx opposed on this 19st day of May 2025.

Brian Burnett
GBOS Parks and Recreation Supervisor

Attest

PLEASE RETURN COMMENTS TO:

Municipality of Anchorage
Planning Department/Current Planning Division
P.O. Box 196650
Anchorage, Alaska 99519-6650
Phone: 907-343-7943

CASE NO: 2025-0064

PETITIONER: Girdwood Valley Service Area-Parks & Recreation Dept.

PLANNER: Paul Hatcher

REQUEST: Administrative Site Plan Review for construction of a new picnic shelter at the Girdwood Lions Club Park. **THIS IS NOT A PUBLIC HEARING**

SITE ADDRESS: Vacant Land

CURRENT ZONE: GIP-P (Girdwood Institutions and Parks) District

ORIG SUBD/LEGAL: Lot 3, Block 1, First Addition Girdwood Townsite, Alaska Subd. (Plat 66-76)

COMMENTS AND DECISION SCHEDULE
Administrative Decision

Decision Date: Friday June 13, 2025

Agency Comments Due: Friday, May 30, 2025

Council Comments Due: Tuesday, June 03, 2025

COMMUNITY COUNCIL(S):
Girdwood Board of Supervisors

Application for Administrative Site Plan Review

Municipality of Anchorage
Planning Department
PO Box 196650
Anchorage, AK 99519-6650

PETITIONER*	PETITIONER REPRESENTATIVE (if any)
Name (last name first) Kelley, Kyle - GVSA Parks & Rec	Name (last name first) Posanka, Aimee - The Boutet Company
Mailing Address P.O. Box 390	Mailing Address 601 E 57th Place, Suite 102
Girdwood, AK 99587	Anchorage, AK 99518
Contact Phone – Day Evening 907-343-8374	Contact Phone – Day Evening 907-317-6338
E-mail kyle.kelley@anchorageak.gov	E-mail aposanka@tbcak.com

*Report additional petitioners or disclose other co-owners on supplemental form. Failure to divulge other beneficial interest owners may delay processing of this application.

PROPERTY INFORMATION

Property Tax #(000-000-00-000): 075-063-21-000

Site Street Address: 135 Egloff Dr. Girdwood, AK 99587

Current legal description: (use additional sheet if necessary)

Girdwood 1st Addition, BLK 1 Lot 3

Zoning: GIP-p	Acreage: 0.198	Grid #: SE4814	Underlying plat #:

SITE PLAN APPROVAL REQUESTED

Use:

Public picnic shelter

(●) New SPR ( ) Amendment to approved site plan Original Case #:

I hereby certify that (I am)(I have been authorized to act for) owner of the property described above and that I petition for an administrative site plan review in conformance with Title 21 of the Anchorage Municipal Code of Ordinances. I understand that payment of the application fee is nonrefundable and is to cover the costs associated with processing this application, and that it does not assure approval of the site plan.

Kyle Kelley
Kyle Kelley (Apr 2, 2025 13:19 AKDT)

Signature (●) Owner ( ) Representative (Representatives must provide written proof of authorization) Date 2-Apr-2025

Print Name

Accepted by:	Fee:	Case Number:	Decision Date admin:
		2025-0064	06/13/2025

ASPR (Rev. 03/21) Front

COMPREHENSIVE PLAN INFORMATION

Improvement Area (per AMC 21.08.050B.): ◉ Class A ◯ Class B

Anchorage 2040 Land Use Designation(s):

- ☐ Large Lot Residential
- ☐ Compact Mixed Residential–Medium
- ☐ Town Center
- ☐ Commercial Corridor
- ☐ Facilities and Institutions
- ☐ Single and Two-family Residential
- ☐ Urban Residential – High
- ☐ Regional Commercial Center
- ☐ Main Street Corridor
- ☐ Industrial
- ☐ Compact Mixed Residential – low
- ☐ Neighborhood Center
- ☐ City Center
- ☐ Open Space

Anchorage 2040 Growth Supporting Features:

- ☐ Transit-supportive Development
- ☐ Greenway-supported Development
- ☐ Residential Mixed-use Development
- ☐ Traditional Neighborhood Development

Chugiak-Eagle River Land Use Classification:

- ☐ Commercial
- ☐ Town Center
- ☐ Residential at _____ dwelling units per acre
- ☐ Industrial
- ☐ Transportation facility
- ☐ Parks
- ☐ Special study area
- ☐ Community Facility
- ☐ Development reserve

Girdwood- Turnagain Arm Land Use Classification:

- ☐ Commercial
- ☐ Resort
- ☐ Commercial/Residential
- ☐ Residential at _____ dwelling units per acre
- ☐ Industrial
- ☐ Transportation facility
- ☐ Commercial Recreation
- ☑ Parks/open space
- ☐ Special study area
- ☐ Public lands/institutions
- ☐ Reserve

Neighborhood, District or Other Area-Specific Plan: Girdwood Area Plan

ENVIRONMENTAL INFORMATION (All or portion of site affected)

Wetland Classification:	◉ None	◯ "C"	◯ "B"	◯ "A"	
Avalanche Zone:	◉ None	◯ Blue Zone	◯ Red Zone		
Floodplain:	◯ None	◉ 100 year	◯ 500 year		
Seismic Zone (Harding/Lawson):	◉ "1"	◯ "2"	◯ "3"	◯ "4"	◯ "5"

RECENT REGULATORY INFORMATION (Events that have occurred in last 5 years for all or portion of site)

- ☐ Rezoning - Case Number:
- ☐ Preliminary Plat ☐ Final Plat - Case Number(s):
- ☐ Conditional Use - Case Number(s):
- ☐ Zoning variance - Case Number(s):
- ☐ Land Use Enforcement Action for
- ☐ Building or Land Use Permit for
- ☐ Wetland permit: ☐ Army Corps of Engineers ☐ Municipality of Anchorage

SUBMITTAL REQUIREMENTS (Only one copy of applicable items is required for initial submittal)

1 copy required:

- ☑ Signed application (original)
- ☑ Watershed sign off form, completed
- ☑ 8 ½" by 11" copy of site plan/building plans submittal

4 copies required:

- ☑ Signed application (copies)
- ☑ Project narrative explaining:
  - ☐ the project ☐ planning objectives
  - ☐ addressing the site plan review criteria on page 3 of this application
- ☑ Site plan to scale depicting, with dimensions:
  - ☐ building footprints ☐ parking areas ☐ vehicle circulation and driveways
  - ☐ pedestrian facilities ☐ lighting ☐ grading
  - ☐ landscaping ☐ loading facilities ☐ freestanding sign location(s)
  - ☐ required open space ☐ drainage ☐ snow storage area or alternative strategy
  - ☐ trash receptacle location and screening detail ☐ fences
  - ☐ significant natural features ☐ easements ☐ project location
- ☑ Building plans to scale depicting, with dimensions:
  - ☐ building elevations ☐ floor plans ☐ exterior colors and textures
- ☐ Assembly Ordinance enacting zoning special limitations, if applicable

(Additional information may be required.)

SITE PLAN REVIEW STANDARDS (21.03.180)

The Planning Director may only approve a site plan if the director finds that **all** of the following standards are satisfied. Each standard must have a response in as much detail as it takes to explain how your project satisfies the standard. The burden of proof rests with you.

1. The site plan is consistent with any previously approved subdivision plat, planned development master plan, or any other precedent plan or land use approval;

2. The site plan complies with all applicable development and design standards set forth in this title, including but not limited to the provisions in chapter 21.04, *Zoning Districts*, chapter 21.05, *Use Regulations*, chapter 21.06, *Dimensional Standards and Measurements*, and chapter 21.07, *Development and Design Standards*;

3. The site plan addresses any significant adverse impacts that can reasonably be anticipated to result from the use, by mitigating or offsetting those impacts to the maximum extent feasible; and

4. The development proposed in the site plan is consistent with the goals, objectives, and policies of the comprehensive plan.

April 7, 2025

Current Planning Division
Planning Department
4700 Elmore Road
PO Box 196650
Anchorage, Alaska 99519-6650

Re: Application for Administrative Site Plan Review
Case 2025-0064
Girdwood 1st Addition (Parcel No. 075-063-21-000)

I hereby authorize The Boutet Company, Inc. (TBC) to act as Owner's Representative in the application for the Administrative Site Plan Review required for the above-described property.

Sincerely,

Kyle Kelley

Kyle Kelley, Service Area Manager
Girdwood Valley Service Area
Municipality of Anchorage

Site Plan Review Administrative_LionsClubPark

Final Audit Report 2025-04-02

Created:	2025-04-02
By:	Aimee Posanka (aposanka@tbcak.com)
Status:	Signed
Transaction ID:	CBJCHBCAABAAM3wGeWt1xESNgs_uOPcBYI1XQw0d48OP

"Site Plan Review Administrative_LionsClubPark" History

Document created by Aimee Posanka (aposanka@tbcak.com)
2025-04-02 - 9:14:59 PM GMT

Document emailed to Kyle Kelley (kyle.kelley@anchorageak.gov) for signature
2025-04-02 - 9:15:04 PM GMT

Email viewed by Kyle Kelley (kyle.kelley@anchorageak.gov)
2025-04-02 - 9:15:34 PM GMT

Document e-signed by Kyle Kelley (kyle.kelley@anchorageak.gov)
Signature Date: 2025-04-02 - 9:19:14 PM GMT - Time Source: server

Agreement completed.
2025-04-02 - 9:19:14 PM GMT

Adobe Acrobat Sign

WMS Archive File Name: 25Girdwood1stAddB1L3

WMS WATERCOURSE MAPPING SUMMARY

Per the requirements for watercourse verification outlined in Project Management and Engineering Operating Policy and Procedure #8 and Planning Department Operating Policy and Procedure #1 (*effective June 18, 2007*), MOA Watershed Management Services has inspected the following location for the presence or absence of stream channels or other watercourses, as defined in Anchorage Municipal Code (21.35).

- Project Case Number or Subdivision Name: Girdwood 1st Addition
- Project Location, Tax ID, or Legal Description: Block 1, Lot 3 (parcel #07506321000)
- Project Area (if different from the entire parcel or subdivision): _____

In accordance with the requirements and methods identified, WMS verifies that this parcel, project area, or application:

X KBL **DOES NOT** contain stream channels and/or drainageways, as identified in WMS field or archival mapping information.*

_____ **DOES** contain stream channels and/or drainageways ***AND*** these are located and identified on submittal documents in general congruence with WMS field and archival mapping information.
*New or additional mapping **IS NOT REQUIRED**.**

_____ Contains stream channels and/or drainageways ***BUT*** one or more streams or other watercourses:
- are ***NOT*** shown on submittal documents, or
- are ***NOT*** depicted adequately on submittal documents for verification, or
- are ***NOT*** located or identified on submittal documents in general congruence with WMS field and archival mapping information.

*New or additional mapping **IS REQUIRED** and must be re-submitted for further review and verification.**

_____ Presence of stream channels and/or drainageways is unknown ***AND*** field verification is not possible at this time. WMS will verify as soon as conditions and prioritized resources allow.

* ***Streams omitted in error by WMS or others remain subject to MOA Code and must be shown in new mapping upon identification of the error.***

ADDITIONAL INFORMATION:

☐Y ~~☒~~N	WMS written drainage recommendations are available.	☐Preliminary	☐Final
☐Y ~~☒~~N	WMS written field inspection report or map is available.	☐Preliminary	☐Final
☐Y ~~☒~~N	Field flagging and/or map-grade GPS data is available.		

Inspection Certified By: _____ **Date:** 3/24/25

MOA PROPERTY REPORT

Data Updated as of: January 22, 2023 3:32 AM

Parcel Number: 075-063-21-000 **Current Owner:** MOA GIRDWOOD PARKS & REC

Address: **Legal Description:** GIRDWOOD 1ST ADDITION BLK 1 LT 3

Plat Number: Click "More Info" above t **Grid:** **Lot Size:** 0.2 acres (8,622 ft²)

Property Tax Portal: https://property.muni.org/Datalets/Datalet.aspx?UseSearch=no&pin=07506321000

State of Alaska Plat Search: http://dnr.alaska.gov/ssd/recoff/search/platmenu

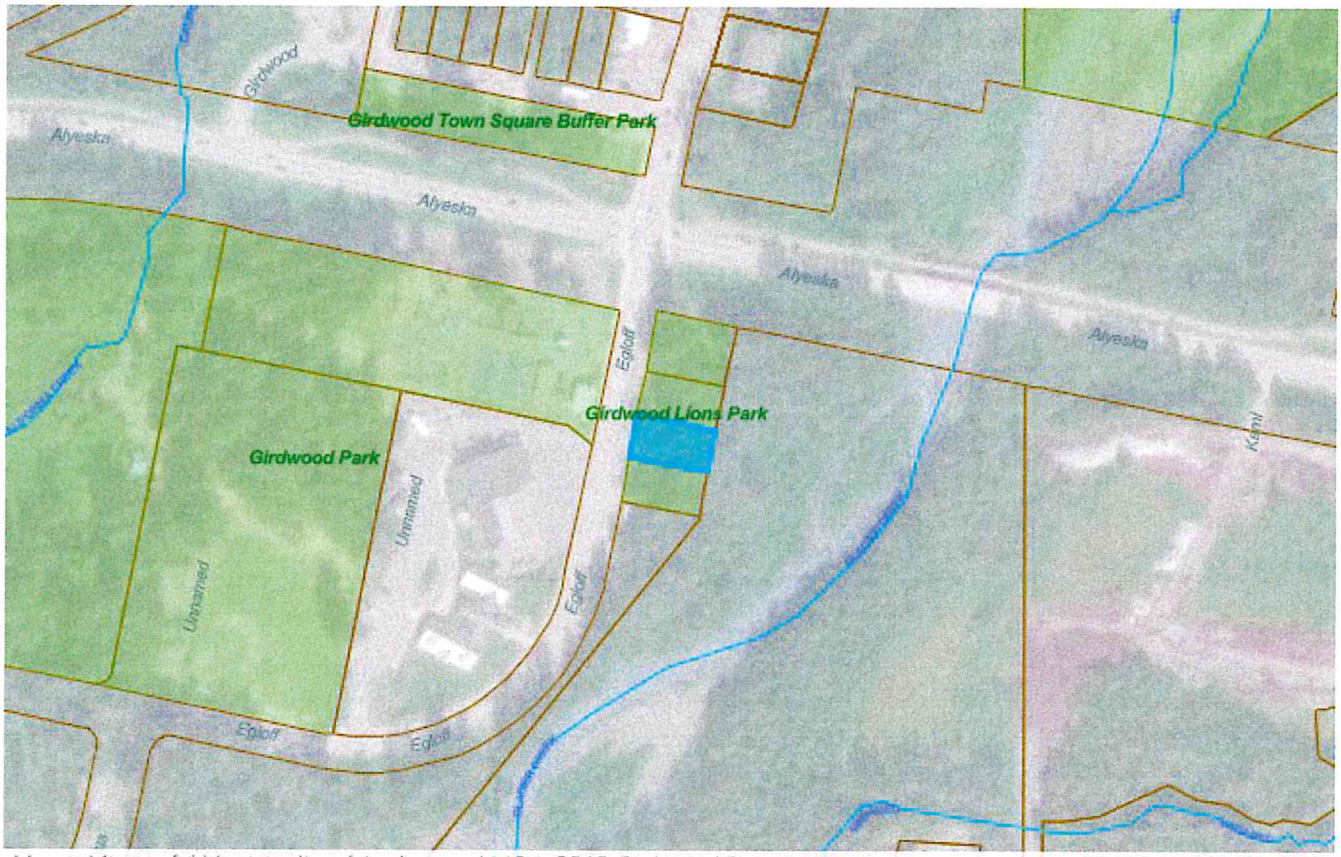

Maxar, Microsoft | Municipality of Anchorage | MOA GDIC, Parks and Recreation Powered by Esri

TAX DISTRICT 4

Service Area	Service Area Classification
Police	Girdwood Valley SA
Fire	Girdwood Valley SA
Building Safety Service	None
Parks	Girdwood Valley SA
Road	Girdwood Valley SA
Streetlights	Girdwood Vally SA

Tax District Map: https://muniorg.maps.arcgis.com/apps/webappviewer/index.html?id=8839ce87392a4980a9f892363089405a&find=07506321000

This information is meant purely as a resource and the Municipality does not guarantee the complete accuracy of this data. Always verify any information with the department that is responsible for the data. https://cdn.ancgis.com/documents/legal/GIS_Data_Terms_and_Conditions.pdf

Data Updated as of: January 22, 2023 3:32 AM

PLANNING

Zoning District: **GIP-p**	2040 Land Use Designation: **See Comprehensive Plan**
Zoning Improvement Area: **Other**	Zoning District Type: **Parks**

Planning Portal: http://www.muni.org/CityViewPortal/Property/PropertyReview?searchKey=desc&searchValue=07506321000
Zoning Map: https://muniorg.maps.arcgis.com/apps/webappviewer/index.html?id=e7c3d7a43f2e4924b23d36fd1500bb01&find=07506321000
Land Use Map: refer to plan pdf - no web map currently available

Comprehensive Plan: Girdwood
Girdwood Area Plan: http://www.muni.org/Departments/OCPD/Planning/Publications/Pages/GirdwoodAreaPlan.aspx

Other Plans: yes: ☑ no: ☐

https://muniorg.maps.arcgis.com/apps/webappviewer/index.html?id=ee1abf76a6394fdcb1057524831143e0&find=07506321000

Wetland Classification: None
http://www.anchoragestormwater.com/maps.html

BUILDING SAFETY

Service Area: Inside ☐ Outside ☑

Building Permit Portal: https://bsd.muni.org/inspandreview/ParcelInfo.aspx?parcelno=07506321000

Wind Zone: I ☐ 2 ☐ 3 ☐ 4 ☐ None ☑

https://muniorg.maps.arcgis.com/apps/webappviewer/index.html?id=cbef6b9160394df0ab2b8d96b64c9b1e&find=07506321000

Flood Review Required: All ☑ Some ☐ None ☐

http://www.anchoragestormwater.com/maps.html

Seismic Code: 1-Lowest ☐ 2-Moderate Low ☐ 3-Moderate ☐ 4-High ☐ 5-Very High ☐ None ☑

https://muniorg.maps.arcgis.com/apps/webappviewer/index.html?id=6d9f19e70868491da6296bdb398b33cc&find=07506321000

Water and Sewer

AWWU Customer: Water ☐ Sewer ☐ Not Current Customer ☐

Anchorage Water and Wastewater: https://www.awwu.biz/customer-service/for-builders-and-developers

Wells or Septic Information:

Wells & Septic Document Search: http://onsite.ci.anchorage.ak.us/WebLink/CustomSearch.aspx?SearchName=SearchOnisteDocuments

This information is meant purely as a resource and the Municipality does not guarantee the complete accuracy of this data. Always verify any information with the department that is responsible for the data. https://cdn.ancgis.com/documents/legal/GIS_Data_Terms_and_Conditions.pdf

Data Updated as of: January 22, 2023 3:32 AM

ADDITIONAL INFORMATION

Nitrate Map: https://muniorg.maps.arcgis.com/apps/webappviewer/index.html?id=6c3acc5dca8244a891f954f0e7f75496&find=07506321000

Soil Boring Map: https://muniorg.maps.arcgis.com/apps/webappviewer/index.html?id=ff7c8f704663452096705a716c14b1f3&find=07506321000

MOA MapIt Link: https://muniorg.maps.arcgis.com/apps/webappviewer/index.html?id=f0bef139a7584820ad9d60c9eeea8a5f&find=07506321000

POLITICAL BOUNDARIES

Assembly District: **6**

https://muniorg.maps.arcgis.com/apps/webappviewer/index.html?id=c4809e7b77da4f058aacd6936d3079fa&find=07506321000

Community Council: **Girdwood**

https://muniorg.maps.arcgis.com/apps/webappviewer/index.html?id=60eb4a8b1e38445487fb06817d904330&find=07506321000

Representative Lookup Map: https://muniorg.maps.arcgis.com/apps/ZoneLookup/index.html?appid=868cbf13fd3144b3a431eed89b48f911&find=07506321000&findSource=2

This information is meant purely as a resource and the Municipality does not guarantee the complete accuracy of this data. Always verify any information with the department that is responsible for the data. https://cdn.ancgis.com/documents/legal/GIS_Data_Terms_and_Conditions.pdf

1. Project Overview

The Girdwood Valley Service Area (GVSA) Parks and Recreation Department proposes to construct a new picnic shelter at the Girdwood Lions Club park located at the southwest corner of Alyeska Highway and Egloff Dr. The Lions Club Park is comprised of 4 parcels and is approximately 0.86 acres in total. The site serves mainly as a picnic area with existing picnic tables, grills, trash bins and signage. The site landscaping is natural trees and vegetation. Of that area, only approximately 1,738 square feet (SF) is proposed to be disturbed for grading and foundation construction. The project objective is to provide visitors a covered shelter for picnics and community gatherings.

2. General Site Plan Review Standards

1. ***The site plan is consistent with any previously approved subdivision plat, planned development master plan, or any other precedent plan or land use approval.***

   The proposed site plan is consistent with the Girdwood Area Land Use plan which designates this area as Public Lands and Institutions.

2. ***The site plan complies with all applicable development and design standards set forth in this title, including but not limited to the provisions in chapter 21.04, Zoning Districts, Chapter 21.05, Use Regulations, chapter 21.06, Dimensional Standards and Measurements, and chapter 21.07, Development and Design Standards.***

   21.09.040 Girdwood Zoning Districts: This site is zoned Girdwood Institutions and Parks (GIP-p). The GIP district is intended to include area of public and quasi-public institutional uses and activities. Within the GIP district, parks, whether dedicated or undedicated, existing or future, are designated on the district map by "GIP-p". The addition of a picnic shelter to the Lions Club Park is a permitted use and enhances the park facilities.

21.09.050 Girdwood Use Regulations Section B.3.c.i Passive Outdoor Recreation: "Those outdoor activities with low environmental impact, are not intrusive, do not use motors and may not requires trails. Activities not necessarily requiring trails include backcountry skiing, dog sledding, snowshoeing, off trail hiking, paragliding, blueberry picking, birding and picnicking. This definition does not include activities involving vehicles or games such as paintball." A picnic shelter complies with this definition and is an allowable use.

21.09.060 Dimensional Standards and Measurements:

The subject parcel (075-063-21) is a legal nonconforming lot of record created with Plat 66-76 within the GIP-p District, with an area of 8,622 sq ft (0.20 acre), and a width of 67.5 ft. The lot width does not meet the minimum requirement in Table 21.09-9. As such, the property line setback requirements will be those of the district where the lot size and width are closest to the existing lot per AMC 21.013.050, which is the gRST-1 District. Follow the use regulations and other requirements of the GIP District but follow the property setback requirements of the gRST-1 District. In summary, the property line setback requirements for this lot are as follows:

- Front – 13 feet
- Rear- 20 feet
- Sides – 10 feet
- Max height – 40 feet
- Max lot coverage – 50%
- Max FAR – 0.7

The front setback is 38 feet, the side setbacks are 20' from the north lot line and 26 ft from the south lot line and the rear setback is 64.8 feet. The lot coverage is 5.5% and the shelter height does not exceed 35 ft.

21.09.070 Development and Design Standards

The proposed improvements are in compliance with all standards set forth on 21.09.070

3. ***The site plan addresses any significant adverse impacts that can reasonably be anticipated to result from the use, by mitigating or offsetting those impacts to the maximum extent feasible.***

There are no adverse impacts anticipated. The construction of a new picnic shelter will improve the usability of the park facilities.

4. ***The development proposed in the site plan is consistent with goals, objectives, and policies of the comprehensive plan.***

The table below presents key goals identified in the Girdwood Area Plan and describes how the Project aligns with these goals.

Girdwood Area Plan Goals

Goal	***Discussion of Consistency***
Perpetuate Girdwood's Small-Town Atmosphere	The Lions Club Park serves the community by providing a space for outdoor recreation and community gatherings. The addition of a picnic shelter on this site greatly enhances the facilities and provides all weather protection for community activities.
Preserve Girdwood's Natural Environment	The area of disturbance is very minimal. The new shelter will enhance users' experience and facilitate passive recreation opportunities for the Girdwood community.
Provide a Variety of Year-Round Recreational Opportunities	The new picnic shelter provides weather protection for increased passive recreational opportunities.
Provide Facilities & Services to Maintain & Enhance the Quality of Community Life	See #1 above

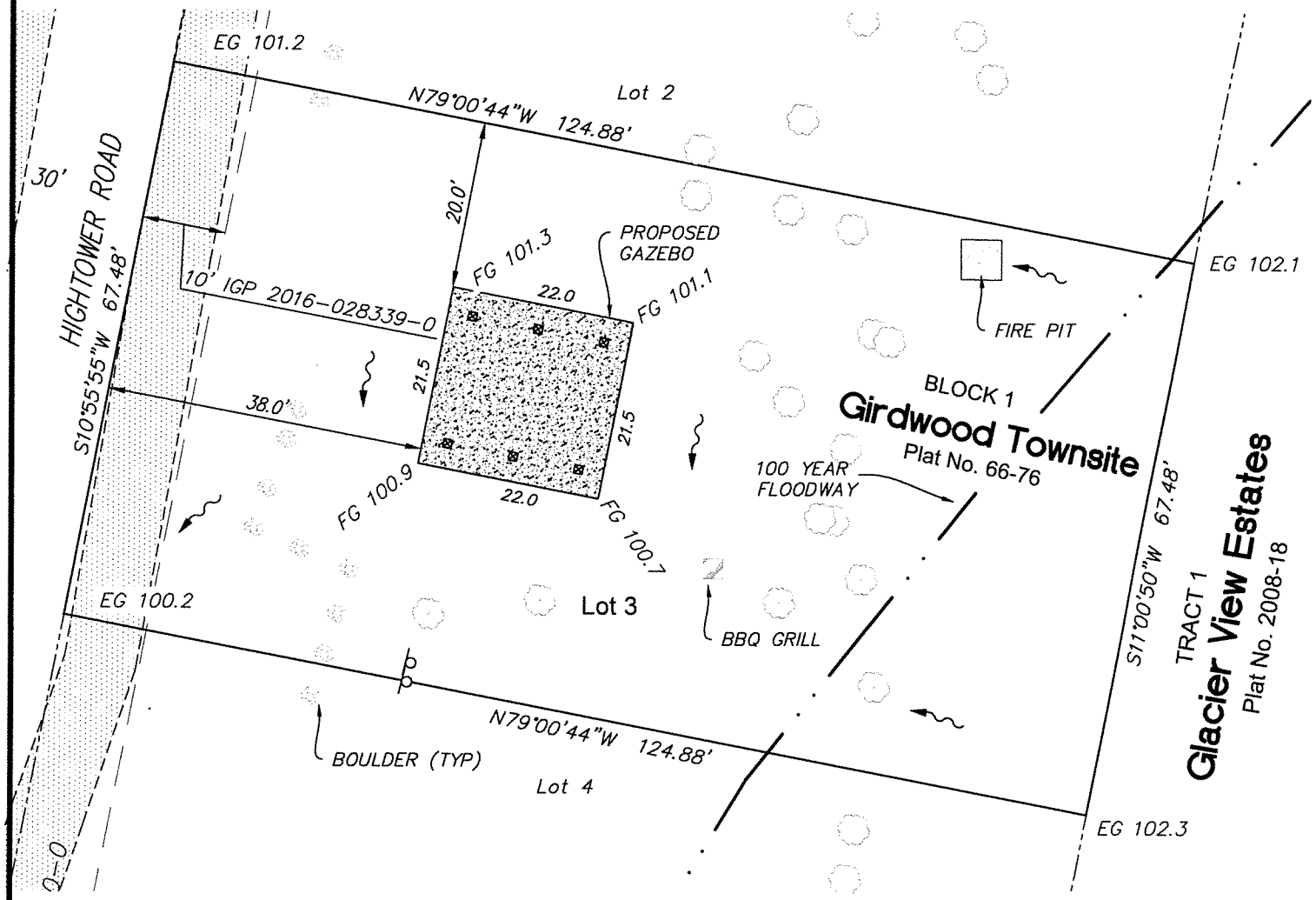

0 20 40 Feet

Legend

	PAVED ROAD OR WALKWAY
EG 100.0'	EXISTING ELEVATION
FG 100.0'	FINISH GRADE
	DECIDUOUS TREE
	DRAINAGE

Lot 3, Block 1
Girdwood Townsite, Alaska Subd.

Lot Size 8424 s.f.

3/25/25

STATE OF ALASKA
49TH
Anthony P. Hoffman
LS-9020
Registered Professional Land Surveyor

Ordered By: MOA		Date: 3/25/25	
Plat: 66-79	Grid: SE4814	Drawn: APH	Chk: APH

Survey Certification: The Boutet Company has conducted a physical survey of the property shown hereon and certifies that the lot corners have been found or established as indicated, and that to the best of our knowledge and abilities, all dimensions have been measured true and correct.

Exclusionary Note: It is the owners' responsibility to determine the existence of any easements, covenants, restrictions or right-of-way takings which do not appear on the recorded subdivision plat. It is the contractor's responsibility to check top of foundation grade and building setbacks in relation to lot lines and easements.

The Boutet Company, Inc.
601 E. 57th Place #102
Anchorage, AK. 99518
Ph. 907-522-6776
Fx. 907-522-6779
License No. AECC957
info@tbcak.com

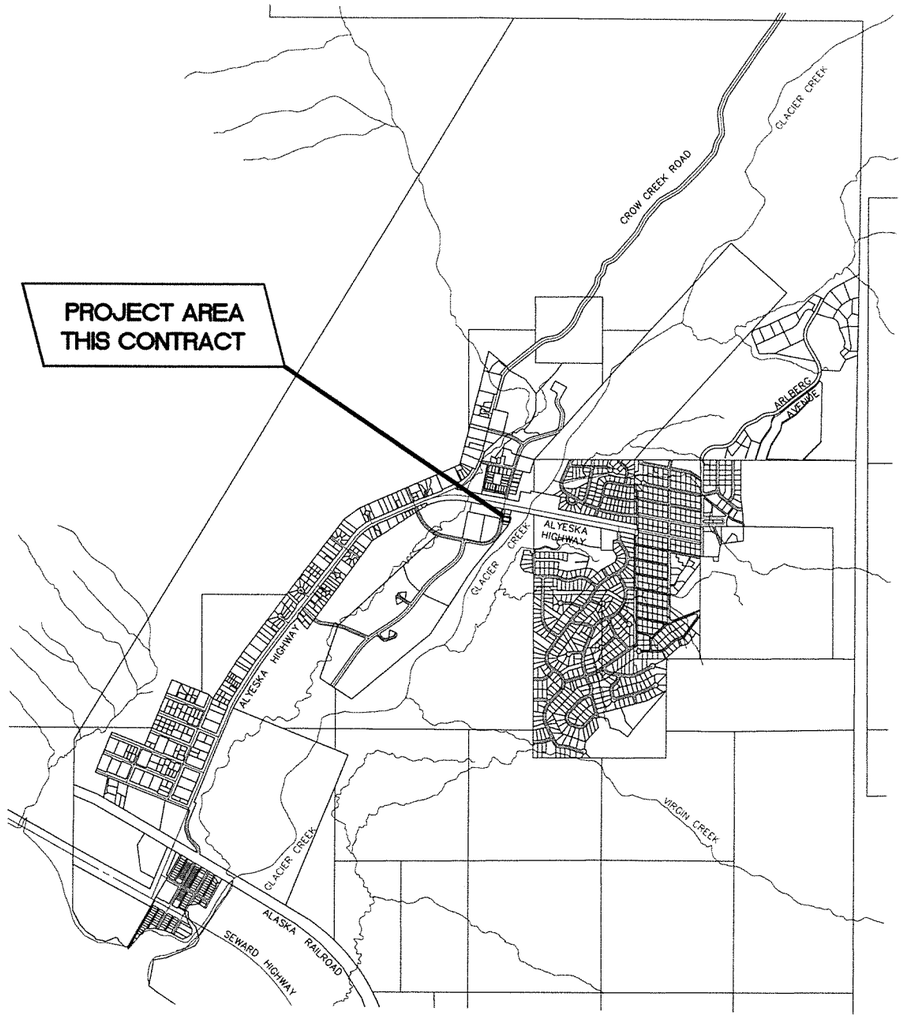

VICINITY MAP

GIRDWOOD, ALASKA

MUNICIPALITY OF ANCHORAGE
PUBLIC WORKS DEPARTMENT
PROJECT MANAGEMENT AND ENGINEERING DEPARTMENT

LION'S CLUB PARK PICNIC SHELTER
MOA PROJECT NO. C25-1146

N

UNOFFICIAL
GRAPHIC SCALE

20 0 20 40

SCALE IN FEET

VERIFY SCALES

BAR IS ONE INCH ON ORIGINAL DRAWING

0 1"

IF NOT ONE INCH ON THIS SHEET, ADJUST SCALES ACCORDINGLY.

SHEET INDE□□

C1 ..... TITLE SHEET
C2 ..... NOTES, ABBREVIATIONS, AND LEGEND
C3 ..... ASBUILT SURVEY
C4 ..... CLEARING, GRUBBING, AND DEMOLITION
C5 ..... SITE AND GRADING PLAN
C6 ..... CROSS SECTIONS
S0.1..... STRUCTURAL GENERAL NOTES AND ABBREVIATIONS
S1.1..... PLANS AND SLAB DETAILS
S2.1..... SHELTER SECTION AND ELEVATION
S3.1..... SHELTER DETAILS
S3.2..... SHELTER DETAILS

PREPARED BY:

The Boutet Company, Inc.
601 E. 57th Place #102
Anchorage, AK. 99518
Ph. 907-522-6776
Fx. 907-522-6779
License No. AECC957

APPROVED BY:

Melinda Kohlhaas, P.E.
DIRECTOR & MUNICIPAL ENGINEER

GENERAL NOTES:

1. CONSTRUCTION SHALL BE COMPLETED IN ACCORDANCE WITH THE MUNICIPALITY OF ANCHORAGE STANDARD SPECIFICATIONS, STREETS–DRAINAGE–UTILITIES–PARKS, DATED 2024 HEREAFTER REFERRED TO AS M.A.S.S., AS CURRENTLY AMENDED BY THE SPECIAL PROVISIONS AND THESE CONSTRUCTION DRAWINGS.

2. DRAWING SCALES ON SHEETS WITHIN THESE PLANS MAY VARY AND SHOULD BE NOTED PRIOR TO USE. THESE PLANS WERE CREATED FOR 22X34 PLAN SET AND AT A SPECIFIC DRAWING SCALE. ANY REPRODUCTION OR PUBLISHING OF THESE PLANS MAY RESULT IN DISTORTION OF SCALE AND SHALL BE VERIFIED PRIOR TO USE.

3. CONTRACTOR SHALL OBTAIN ALL NECESSARY PERMITS PRIOR TO BEGINNING CONSTRUCTION. THE PERMITS SHALL BE MAINTAINED AT THE JOB SITE.

4. CONTRACTOR SHALL MAINTAIN "REDLINE" RECORD DRAWINGS ON A CLEAN SET OF CONSTRUCTION DRAWINGS IN ACCORDANCE WITH M.A.S.S. DIVISION 65.00 CONSTRUCTION SPECIFICATIONS FOR CONSTRUCTION SURVEY. THE "REDLINES" SHALL BE KEPT CURRENT ON A DAILY BASIS AND SHALL BE AVAILABLE TO THE ENGINEER FOR INSPECTION ON THE JOBSITE.

5. CONTRACTOR SHALL RECORD SURVEY NOTES FOR SUBMITTAL WITH AS–BUILT PLANS, INCLUDING HORIZONTAL AND VERTICAL LOCATIONS OF ALL UTILITIES ENCOUNTERED IN THE FIELD. CONTRACTOR SHALL RECORD ALL DEVIATIONS FROM THE PLANS.

6. THESE NOTES CONTAIN INFORMATION NECESSARY FOR THE PROPER EXECUTION OF THE WORK CONTAINED ON THESE IMPROVEMENT PLANS. THESE NOTES APPLY TO ALL PLAN SHEETS. ADDITIONAL CONSTRUCTION NOTES MAY ALSO BE SHOWN ON INDIVIDUAL PLAN SHEETS. THE CONTRACTOR IS RESPONSIBLE TO READ AND COMPLY WITH ALL NOTES SHOWN ON THIS SET OF PLANS. THE TERM "CONTRACTOR", AS USED IN THESE NOTES AND ELSEWHERE IN THIS PLAN SET, MEANS THE GENERAL CONTRACTOR AND ALL SUBCONTRACTORS AND INDIVIDUALS AUTHORIZED TO PERFORM WORK SHOWN ON THESE IMPROVEMENT PLANS. THE CONTRACTOR IS RESPONSIBLE TO COMPLY WITH ALL NOTES APPLICABLE TO HIS/HER WORK. ALL CONTRACTORS ARE DIRECTED TO CONTACT THIS ENGINEER FOR ANY QUESTIONS REGARDING THE STATED OR IMPLIED MEANING OF ANY NOTE OR OTHER INFORMATION CONTAINED ON THESE IMPROVEMENT PLANS. IT IS THE CONTRACTOR'S RESPONSIBILITY TO INSURE THAT HIS/HER CONTRACT FOR SERVICES INCLUDES THE RESPONSIBILITIES DEFINED BY THE APPLICABLE NOTES.

7. NO FROZEN SOILS CAN BE USED IN FILLS. NO FILL CAN BE PLACED OVER FROZEN GROUND.

8. ALL AREAS TO BE FILLED SHALL BE CLEARED OF VEGETATION, ROOT MAT, AND OTHER UNSUITABLE MATERIALS.

9. NO ROCK OR SIMILAR IRREDUCIBLE MATERIAL WITH A MAXIMUM DIMENSION GREATER THAN 12 INCHES SHALL BE BURIED PLACED IN FILLS.

10. HOURS OF OPERATION: MONDAY –SATURDAY: 7AM–7PM, IN COMPLIANCE WITH THE MUNICIPAL NOISE AND HOURS OF OPERATION REQUIREMENTS DURING CONSTRUCTION IN AMC 15.70.060B.3.

EXISTING UTILITIES:

11. LOCATIONS DEPICTED FOR THE UTILITIES AND OTHER EXISTING FEATURES ARE APPROXIMATE. SOME UTILITIES HAVE BEEN LOCATED FROM AS–BUILT DRAWINGS AND SOME FROM UTILITY COMPANY LOCATES, AND THEREFORE MAY NOT BE VISIBLE.

12. CONTRACTOR SHALL BE RESPONSIBLE FOR LOCATING AND VERIFYING ALL UTILITIES AND PERFORMING ANY NECESSARY VERIFICATION PRIOR TO CONSTRUCTION.

13. (UNDERGROUND) OVERHEAD ELECTRICAL AND TELECOMMUNICATION LINES (AND POLES) OCCUR WITHIN THE PROJECT AREA; CONTRACTOR SHALL COORDINATE WORK ACCORDINGLY. ALL WORK IN CLOSE PROXIMITY TO EXISTING (OVERHEAD) UNDERGROUND LINES (AND POLES) SHALL COMPLY WITH APPLICABLE FEDERAL, STATE, AND LOCAL STATUTES, CODES AND GUIDELINES, AND THE ELECTRICAL FACILITY CLEARANCE REQUIREMENTS OF THE GOVERNING UTILITY.

14. HAND DIGGING IS REQUIRED WITHIN TWO FEET OF BURIED ELECTRICAL CABLE. SOME UTILITIES HAVE BEEN LOCATED FROM AS–BUILT DRAWINGS AND MAY NOT BE VISIBLE.

15. THE CONTRACTOR SHALL BE RESPONSIBLE FOR DETERMINING THE EXACT LOCATION OF ALL EXISTING UTILITIES WITHIN THE LIMITS OF CONSTRUCTION, WHETHER OR NOT SAID UTILITIES ARE SHOWN ON THE PLANS. THIS RESPONSIBILITY INCLUDES CONTACTING UTILITY COMPANIES FOR LOCATIONS OR POTHOLING PRIOR TO CONSTRUCTION. ANY DAMAGE TO EXISTING UTILITIES DURING CONSTRUCTION IS THE RESPONSIBILITY OF THE CONTRACTOR.

EXCAVATION:

16. EXACT LOCATION OF EXCAVATION AND BACKFILL SHALL BE AS SHOWN ON THE PLANS OR AS DIRECTED BY THE ENGINEER.

17. ORGANIC MATERIAL SHALL BE REMOVED FROM THE SUBGRADE TO A DEPTH TO BE DETERMINED BY THE ENGINEER. NO ORGANIC MATERIAL OR OTHER DELETERIOUS MATERIAL SHALL BE UTILIZED FOR BACKFILL.

18. DEWATERING IS NOT ANTICIPATED FOR THIS PROJECT. IF DEWATERING IS REQUIRED, REFER TO MASS.

19. CLASSIFIED FILL SHALL BE PLACED IN LIFTS NOT TO EXCEED 12–INCHES IN DEPTH AND SHALL BE COMPACTED TO 95% M.D.D.

20. FINISH GRADE (FG) REPRESENTS THE ELEVATION OF THE FINISHED SURFACE. THIS INCLUDES LANDSCAPE AREAS, PAVED OR CONCRETE SURFACES, ROCK RIP–RAP SURFACE AND ELEVATION AT EXTERIOR OF STRUCTURE FOUNDATION, UNLESS OTHERWISE DENOTED ON DETAIL OR SPECIAL LABEL. IT IS THE RESPONSIBILITY OF THE CONTRACTOR TO ADJUST SUBGRADE OR TOPSOIL TO ALLOW FOR FINISHED SURFACE MATERIAL DIMENSIONS. IF DETAIL IS PROVIDED FOR SPECIAL AREA, DETAIL SHALL DENOTE FINISH GRADES.

21. CUT AND FILL SLOPES SHALL NOT EXCEED 2 HORIZONTAL UNITS TO 1 VERTICAL UNIT. (2:1)

CLEANUP AND TOPSOIL:

22. WORK AND MATERIALS REQUIRED FOR REMOVING LITTER OR DEBRIS THAT EXISTS WITHIN THE PROJECT LIMITS SHALL BE CONSIDERED INCIDENTAL TO THE BID ITEM "DEMOLITION" (OR INCIDENTAL TO THE PROJECT) AND NO SEPARATE PAYMENT SHALL BE MADE.

23. CONTRACTOR SHALL RESTORE DISTURBED PROPERTY TO PRE–CONSTRUCTION CONDITION(S), UNLESS OTHERWISE DIRECTED BY THE ENGINEER. PAYMENT FOR RESTORING DISTURBED PROPERTY SHALL BE CONSIDERED INCIDENTAL TO THE PROJECT AND AND NO SEPARATE PAYMENT SHALL BE MADE, UNLESS BID ITEMS ARE PROVIDED.

FIRE & BUILDING CODE REVIEW

PROJECT DESCRIPTION:
CONSTRUCTION OF A NEW PICNIC SHELTER, 474 SQ. FT. SEE STRUCTURAL GENERAL NOTE (S0.1) FOR MATERIALS SPECIFICATIONS

CONSTRUCTION TYPE:
(2018 IBC 602) TYPE V; STRUCTURAL FRAMING IS HEAVY TIMBER.

OCCUPANCY CLASSIFICATION:
SMALL ASSEMBLY < 50 PERSONS & < 750 SQ. FT. B

ALLOWABLE BUILDING HEIGHTS:
(2018 IBC 501) 40 FT PER IBC 2021, TABLE 504.3

FIRE PROTECTION:
NEAREST FIRE HYDRANT ACROSS THE STREET ON EGLOFF DR @ 117' FROM PROPOSED PICNIC SHELTER. 4,860 GPM @20 PSI AVAILABLE FLOW AT MAX DAY DEMAND OF YEAR. STATIC PRESSURE 91 PSI. SURFACE ELEVATION ~101 FT. (AWWU)

ABBREVIATIONS

AC	ASPHALT CONCRETE PAVEMENT
ADA	AMERICAN WITH DISABILITIES ACT OF 1990
BM	BENCH MARK
BOW	BOTTOM OF WALL
CL	CENTERLINE
CMP	CORRUGATED METAL PIPE
E	ELECTRICAL
EL	ELEVATION
EP	EDGE OF PAVEMENT
ESMT	EASEMENT
EX	EXISTING
FG(e)	FINISH GRADE EXISTING
FG	FINISHED GRADE
FL	FLOW LINE
FL(e)	FLOW LINE EXISTING
G	GAS
GB	GRADE BREAK
IAW	IN ACCORDANCE WITH
INV	INVERT
LF	LINEAR FEET
MASS	MUNICIPALITY OF ANCHORAGE STANDARD SPECIFICATIONS
MAX	MAXIMUM
ME	MATCH EXISTING
MIN	MINIMUM
NIC	NOT IN CONTRACT (WORK TO BE PERFORMED BY OTHERS)
NTS	NOT TO SCALE
P#	POINT NUMBER
PCC	PORTLAND CEMENT CONCRETE
PP	POWER POLE
PL	PROPERTY LINE
PUE	PUBLIC UTILITY EASEMENT
R	RADIUS
RAP	RECYCLED ASPHALT PAVEMENT
ROW	RIGHT–OF–WAY
REF	REFERENCE
SDFI	STORM DRAIN FIELD INLET
SDMH	STORM DRAIN MANHOLE
ST	STREET
TEL	TELEPHONE
TBC	TOP BACK OF CURB
TBC (e)	TOP BACK OF CURB EXISTING
TOW	TOP OF WALL
TYP	TYPICAL

LEGEND

	PROPERTY LINE
101	EXISTING CONTOUR LINE
112	PROPOSED CONTOUR LINE
	CLEARING AND GRUBBING LIMITS
	PROPOSED ASPHALT PAVEMENT
	PROPOSED P.C.C.
	PROPOSED EP
	EXISTING DRAINAGE SWALE
	EXISTING VEGETATION
	EXISTING RAILROAD TRACKS
	EXISTING CHAIN LINK FENCE
	EXISTING CULVERT
G	GAS
SD	STORM DRAIN
W	WATER
C	COMMUNICATIONS
S	SEWER
OH/E	ELECTRIC
	DAYLIGHT LINE (FILL CONDITION)
	DAYLIGHT LINE (CUT CONDITION)
	SIGN
	FIRE HYDRANT
	WATER VALVE
	STORM DRAIN MANHOLE
	CATCH BASIN
	POLE
	LIGHT POLE
	GUY ANCHOR
	UTILITY PEDESTAL

FIELD BOOKS	BM NO.	LOCATION	ELEV.
DESIGN:			
STAKING:			
ASBUILT:			
CONTRACTOR:			
INSPECTOR:			
CONSTRUCTION RECORD	VERTICAL DATUM		

DATA	DRAWN BY	CHECKED BY	DATA	DRAWN BY	CHECKED BY
BASE	TBC		TELEPHONE	---	
TOPOGRAPHY	TBC		ELECTRIC	---	
PROFILE	---		CABLE TV	---	
SANITARY SEWER	---		TRAFFIC SIGNAL	---	
STORM SEWER	---		DESIGN	---	
WATER	---		QUANTITIES	---	
GAS	---		MUN. FINAL CHECK	---	
PLAN CHECK					

REV	DATE	DESCRIPTION	BY	REV	DATE	DESCRIPTION	BY
REVISIONS							

The Boutet Company, Inc.
601 E. 57th Place #102
Anchorage, AK. 99518
Ph. 907–522–6776
Fx. 907–522–6779
License No. AECC957
CONSULTANT

STATE OF ALASKA 49TH Todd C. Jacobson No. CE-9132 REGISTERED PROFESSIONAL ENGINEER
SEAL

MUNICIPALITY OF ANCHORAGE

PROJECT MANAGEMENT AND ENGINEERING DEPARTMENT

GIRDWOOD LIONS CLUB PARK SHELTER

NOTES, ABBREVIATIONS, AND LEGEND

HORZ SCALE: 1"=5' | DATE 02/21/2025 | GRID: SE4B15
VERT SCALE: N.T.S. | ACCT. NO.
SHEET C2 of C6

LEGEND

- SURVEY MONUMENT
- 901 SURVEY POINT NUMBER
- BUSH / SHRUB
- CONIFEROUS TREE
- SIGN
- DECIDUOUS TREE
- GUY ANCHOR
- LIGHT POLE
- VEHICLE HEATER OUTLET
- PIPE END
- UTILITY JUNCTION BOX
- UTILITY POLE
- SANITARY SEWER MANHOLE
- CULVERT
- STORM DRAIN CATCHBASIN
- FIELD DRAIN
- STORM DRAIN MANHOLE
- FIRE HYDRANT
- VALVE
- BBQ GRILL ON POST
- FIRE PIT
- PICNIC TABLE
- BOULDER
- EDGE OF TREES
- CONCRETE / SIDEWALK
- CURB AND GUTTER
- EDGE OF ASPHALT
- FENCE
- COMMUNICATION LINE
- FIBER OPTIC LINE
- ELECTRIC LINE
- OVERHEAD ELECTRIC LINE
- GAS LINE
- SANITARY SEWER LINE
- STORM DRAIN LINE
- WATER LINE
- PROPERTY LINE
- RIGHT-OF-WAY CENTERLINE
- EASEMENT LINE
- SECTION LINE

Point Table

Point #	Elevation	Northing	Easting	Description
7	103.80	2544338.34	1794423.39	1.5 BC FLUSH
1996	106.67	2543966.29	1794162.54	2 1/2" ALUMINUM MONUMENT
2173	213.28	2544374.05	1794240.79	2 1/2" ALUMINUM MONUMENT
2236	213.42	2544644.50	1794324.49	1" ALUMINUM CAP MONUMENT

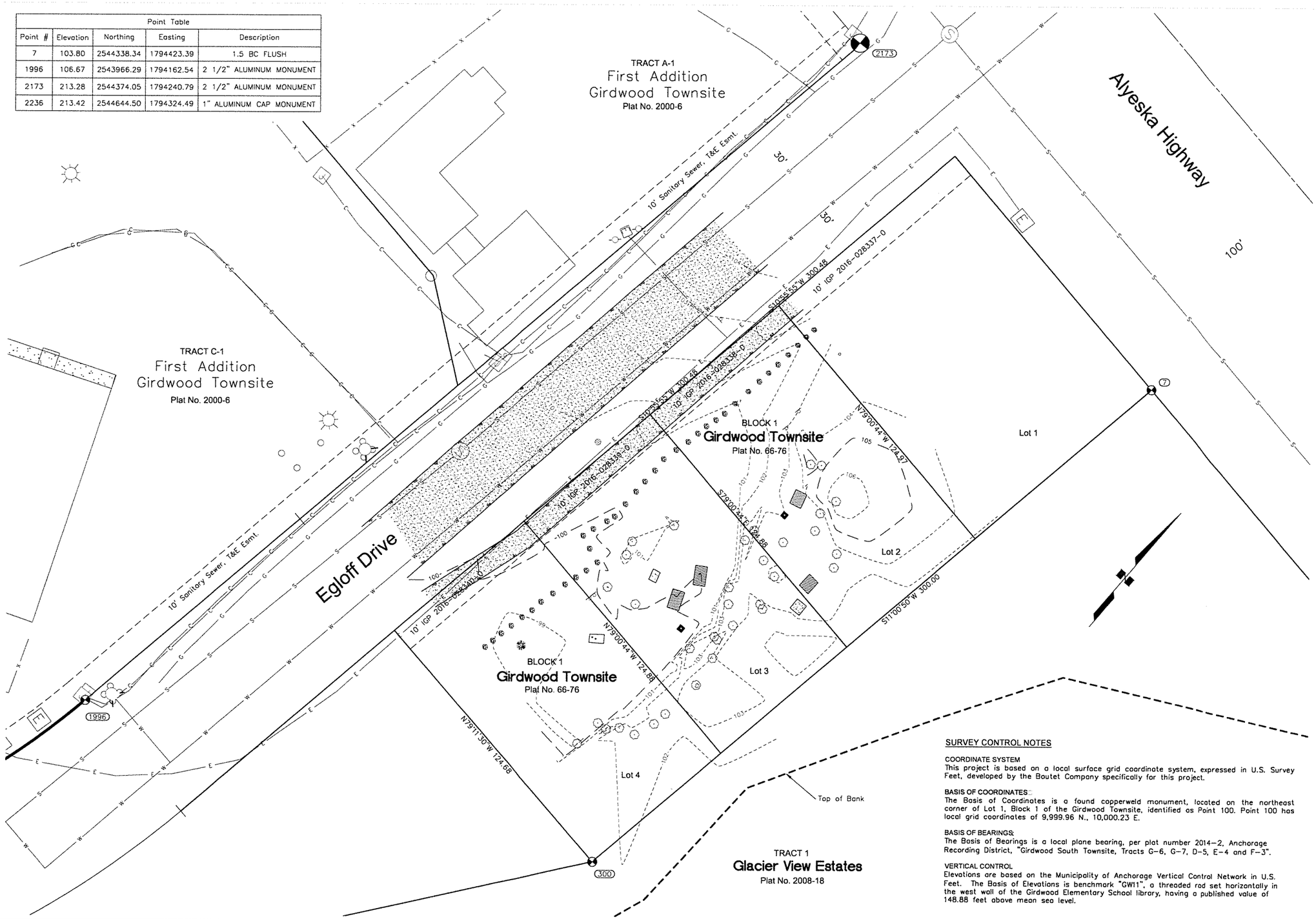

SURVEY CONTROL NOTES

COORDINATE SYSTEM
This project is based on a local surface grid coordinate system, expressed in U.S. Survey Feet, developed by the Boutet Company specifically for this project.

BASIS OF COORDINATES:
The Basis of Coordinates is a found copperweld monument, located on the northeast corner of Lot 1, Block 1 of the Girdwood Townsite, identified as Point 100. Point 100 has local grid coordinates of 9,999.96 N., 10,000.23 E.

BASIS OF BEARINGS:
The Basis of Bearings is a local plane bearing, per plat number 2014-2, Anchorage Recording District, "Girdwood South Townsite, Tracts G-6, G-7, D-5, E-4 and F-3".

VERTICAL CONTROL
Elevations are based on the Municipality of Anchorage Vertical Control Network in U.S. Feet. The Basis of Elevations is benchmark "GW11", a threaded rod set horizontally in the west wall of the Girdwood Elementary School library, having a published value of 148.88 feet above mean sea level.

FIELD BOOKS	BM NO.	LOCATION	ELEV.
DESIGN: 3658/ 2-4, 7-10 & 28	GW 11	MOA 1994 Benchmark Book, GD-6	148.88
	GW 18	MOA 1994 Benchmark Book, GD-10	164.21
STAKING:			
ASBUILT:			
CONTRACTOR:	BASIS OF DATUM: 1972 N.G.S. ADJUSTED DATUM		
INSPECTOR:			
CONSTRUCTION RECORD	VERTICAL DATUM		

DATA	DRAWN BY	CHECKED BY	DATA	DRAWN BY	CHECKED BY
BASE	TBC		TELEPHONE	---	
TOPOGRAPHY	TBC		ELECTRIC	---	
PROFILE	---		CABLE TV	---	
SANITARY SEWER	---		TRAFFIC SIGNAL	---	
STORM SEWER	---		DESIGN	---	
WATER	---		QUANTITIES	---	
GAS	---		MUN. FINAL CHECK		
PLAN CHECK					

REV	DATE	DESCRIPTION	BY	REV	DATE	DESCRIPTION	BY
REVISIONS							

The Boutet Co.
CONSULTANT

STATE OF ALASKA 49TH
Anthony P. Hoffman
LS-9020
Registered Professional Land Surveyor
SEAL

MUNICIPALITY OF ANCHORAGE

PROJECT MANAGEMENT AND ENGINEERING DEPARTMENT

GIRDWOOD LIONS CLUB PARK SHELTER

ASBUILT SURVEY

HORZ SCALE: 1"=20'
VERT SCALE: N.T.S.
DATE 9/13/22
ACCT. NO.
GRID SE4815
SHEET C3 of C6

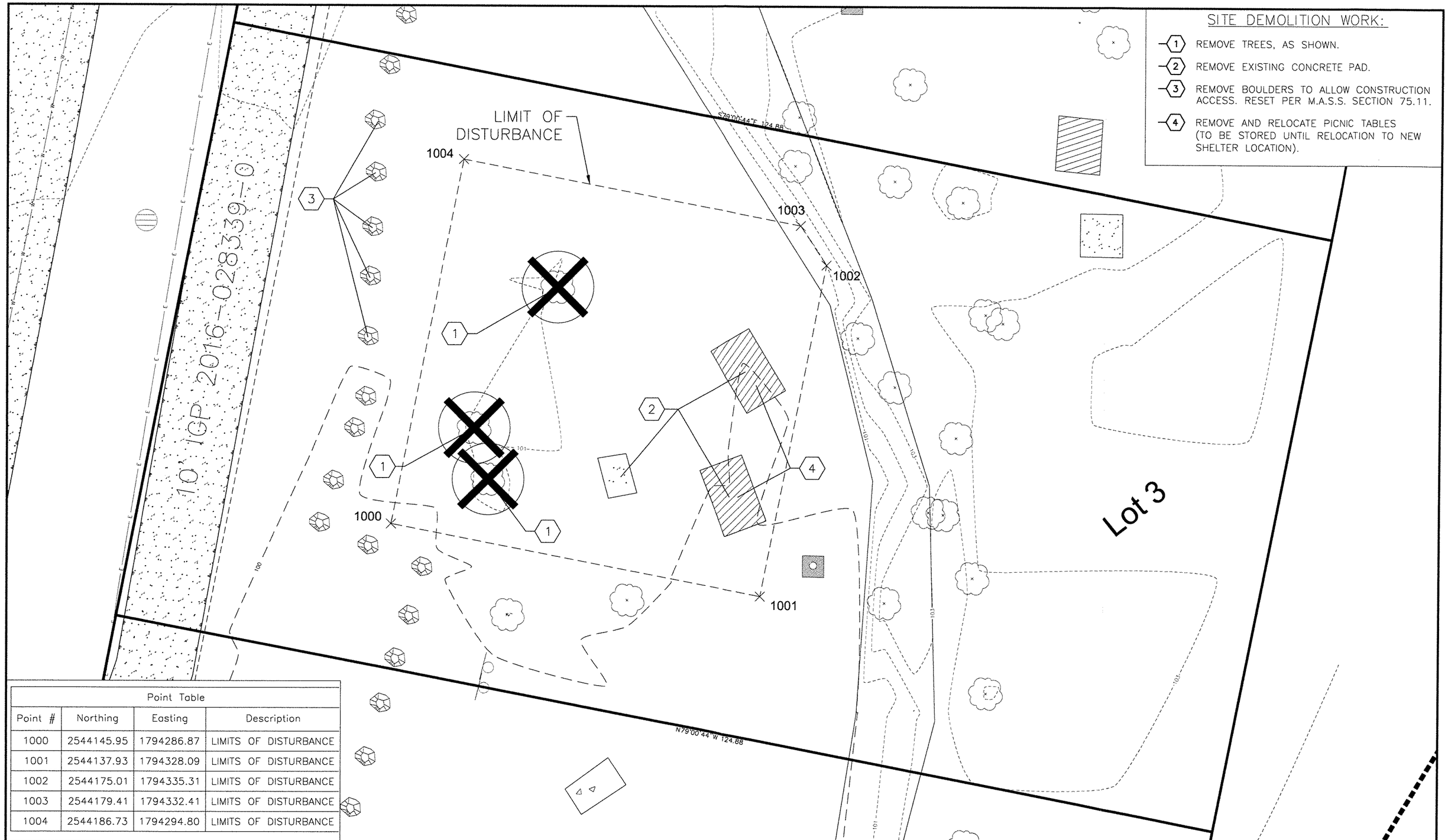

Point Table			
Point #	Northing	Easting	Description
1000	2544145.95	1794286.87	LIMITS OF DISTURBANCE
1001	2544137.93	1794328.09	LIMITS OF DISTURBANCE
1002	2544175.01	1794335.31	LIMITS OF DISTURBANCE
1003	2544179.41	1794332.41	LIMITS OF DISTURBANCE
1004	2544186.73	1794294.80	LIMITS OF DISTURBANCE

FIELD BOOKS	BM NO.	LOCATION	ELEV.
DESIGN:			
STAKING:			
ASBUILT:			
CONTRACTOR:			
INSPECTOR:			
CONSTRUCTION RECORD	VERTICAL DATUM		

DATA	DRAWN BY	CHECKED BY	DATA	DRAWN BY	CHECKED BY
BASE	TBC		TELEPHONE	---	
TOPOGRAPHY	TBC		ELECTRIC	---	
PROFILE	---		CABLE TV	---	
SANITARY SEWER	---		TRAFFIC SIGNAL	---	
STORM SEWER	---		DESIGN	---	
WATER	---		QUANTITIES	---	
GAS	---		MUN. FINAL CHECK	---	
PLAN CHECK					

REV	DATE	DESCRIPTION	BY	REV	DATE	DESCRIPTION	BY
REVISIONS							

The Boutet Company, Inc.
601 E. 57th Place #102
Anchorage, AK. 99518
Ph. 907-522-6776
Fx. 907-522-6779
License No. AECC957
CONSULTANT

STATE OF ALASKA 49TH Todd C. Jacobson No. CE-9132 REGISTERED PROFESSIONAL ENGINEER
SEAL

MUNICIPALITY OF ANCHORAGE

PROJECT MANAGEMENT AND ENGINEERING DEPARTMENT

GIRDWOOD LIONS CLUB PARK SHELTER

CLEARING, GRUBBING, & DEMOLITION

HORZ SCALE: 1"=5' | DATE 02/21/2025 | GRID: SE4815 | SHEET C4 of C6
VERT SCALE: N.T.S. | ACCT. NO.

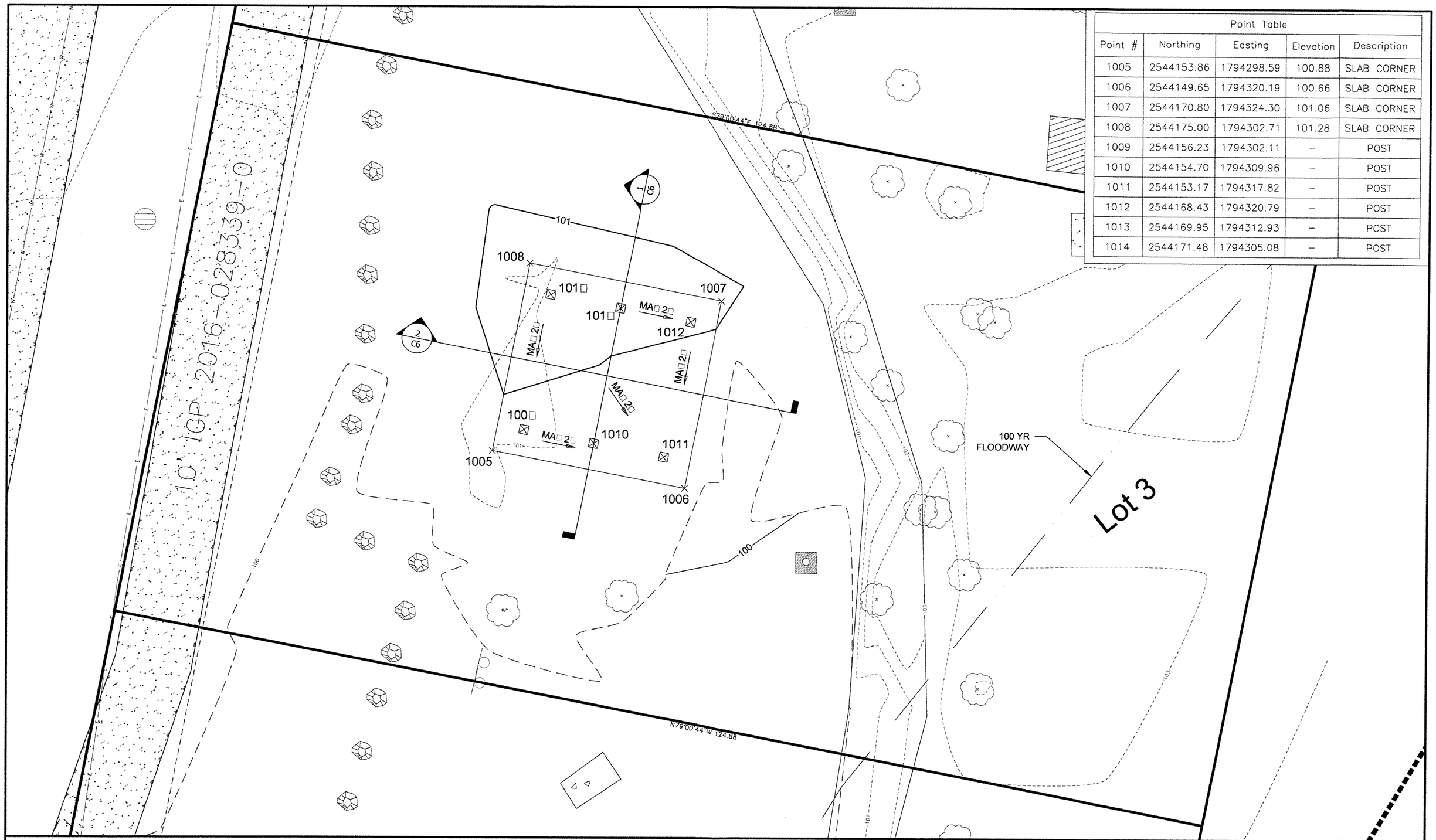

Point Table				
Point #	Northing	Easting	Elevation	Description
1005	2544153.86	1794298.59	100.88	SLAB CORNER
1006	2544149.65	1794320.19	100.66	SLAB CORNER
1007	2544170.80	1794324.30	101.06	SLAB CORNER
1008	2544175.00	1794302.71	101.28	SLAB CORNER
1009	2544156.23	1794302.11	–	POST
1010	2544154.70	1794309.96	–	POST
1011	2544153.17	1794317.82	–	POST
1012	2544168.43	1794320.79	–	POST
1013	2544169.95	1794312.93	–	POST
1014	2544171.48	1794305.08	–	POST

FIELD BOOKS	BM NO.	LOCATION	ELEV.
DESIGN:			
STAKING:			
ASBUILT:			
CONTRACTOR:			
INSPECTOR:			
CONSTRUCTION RECORD	VERTICAL DATUM		

DATA	DRAWN BY	CHECKED BY	DATA	DRAWN BY	CHECKED BY
BASE	TBC		TELEPHONE	---	
TOPOGRAPHY	TBC		ELECTRIC	---	
PROFILE	---		CABLE TV	---	
SANITARY SEWER	---		TRAFFIC SIGNAL	---	
STORM SEWER	---		DESIGN	---	
WATER	---		QUANTITIES	---	
GAS	---		MUN. FINAL CHECK	---	
PLAN CHECK					

REV	DATE	DESCRIPTION	BY	REV	DATE	DESCRIPTION	BY
REVISIONS							

The Boutet Company, Inc.
601 E. 57th Place #102
Anchorage, AK. 99518
Ph. 907-522-6776
Fx. 907-522-6779
License No. AECC957
CONSULTANT

STATE OF ALASKA 49TH Todd C. Jacobson No. CE-9132 REGISTERED PROFESSIONAL ENGINEER
SEAL

MUNICIPALITY OF ANCHORAGE

PROJECT MANAGEMENT AND ENGINEERING DEPARTMENT

GIRDWOOD LIONS CLUB PARK SHELTER

SITE AND GRADING PLAN

HORZ SCALE: 1"=5'
VERT SCALE: N.T.S.
DATE 02/21/2025
GRID: SE4815
ACCT. NO.
SHEET C5 of C6

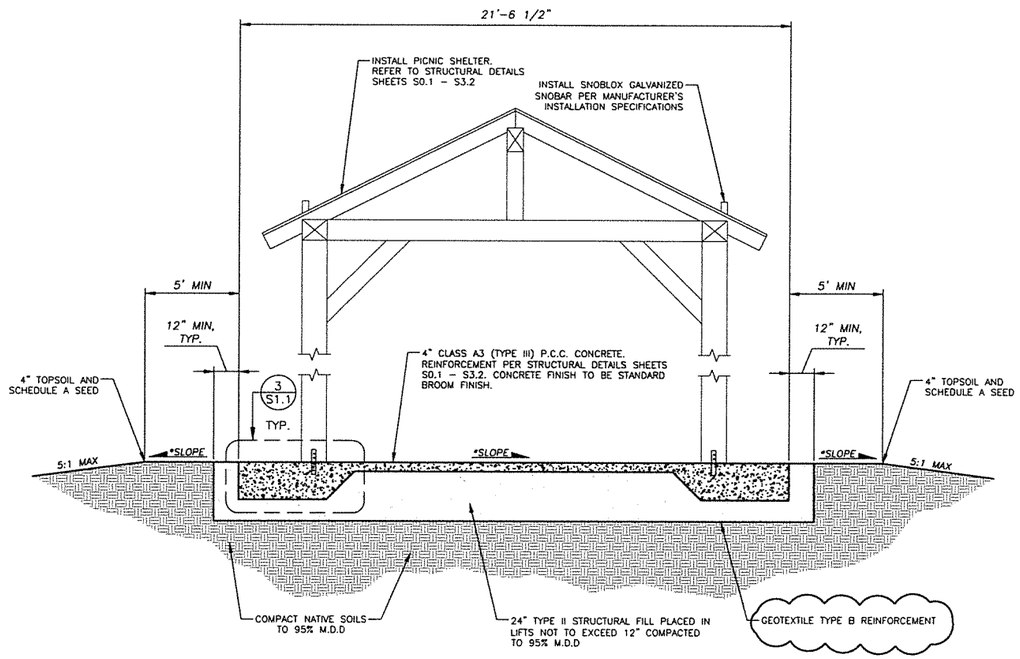

1
C6

* CROSS SLOPES SHALL BE A MINIMUM OF 1.0% AND A MAXIMUM OF 2.0% AS MEASURED IN ALL DIRECTIONS (See Grading Plan)

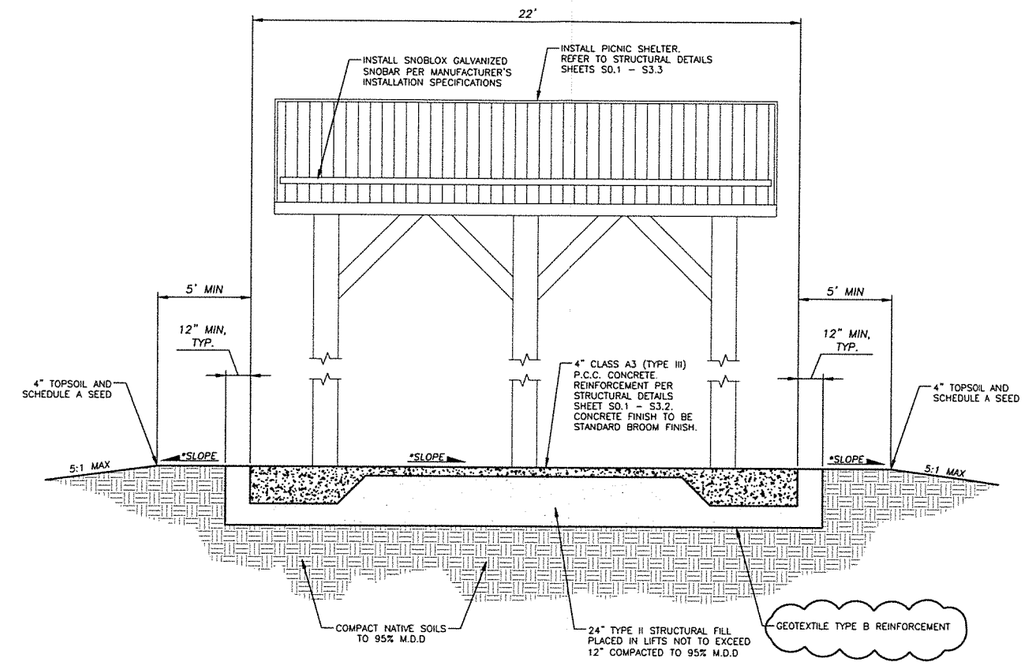

2
C6

* CROSS SLOPES SHALL BE A MINIMUM OF 1.0% AND A MAXIMUM OF 2.0% AS MEASURED IN ALL DIRECTIONS (See Grading Plan)

FIELD BOOKS	BM NO.	LOCATION	ELEV.
DESIGN:			
STAKING:			
ASBUILT:			
CONTRACTOR:			
INSPECTOR:			
CONSTRUCTION RECORD	VERTICAL DATUM		

DATA	DRAWN BY	CHECKED BY	DATA	DRAWN BY	CHECKED BY
BASE	TBC		TELEPHONE	---	
TOPOGRAPHY	TBC		ELECTRIC	---	
PROFILE	---		CABLE TV	---	
SANITARY SEWER	---		TRAFFIC SIGNAL	---	
STORM SEWER	---		DESIGN	---	
WATER	---		QUANTITIES	---	
GAS	---		MUN. FINAL CHECK	---	
PLAN CHECK					

REV	DATE	DESCRIPTION	BY	REV	DATE	DESCRIPTION	BY
REVISIONS							

The Boutet Company, Inc.
601 E. 57th Place #102
Anchorage, AK. 99518
Ph. 907-522-6776
Fx. 907-522-6779
License No. AECC957
CONSULTANT

STATE OF ALASKA 49TH
Todd C. Jacobson
No CE-9132
REGISTERED PROFESSIONAL ENGINEER
SEAL

MUNICIPALITY OF ANCHORAGE

PROJECT MANAGEMENT AND ENGINEERING DEPARTMENT

GIRDWOOD LIONS CLUB PARK SHELTER

CROSS SECTIONS

HORZ SCALE: 1"=5'
VERT SCALE: N.T.S.
DATE 02/21/2025
GRID: SE4815
ACCT. NO.
SHEET C6 of C6

STRUCTURAL GENERAL NOTES

GENERAL
THE CONTRACTOR MUST VERIFY AND COORDINATE ALL DIMENSIONS AMONG THE DRAWINGS BEFORE STARTING ANY WORK OR FABRICATION. IN CASE OF DISCREPANCIES BETWEEN DRAWINGS, SPECIFICATIONS, REFERENCE STANDARDS, SITE CONDITIONS OR GOVERNING CODE, THE MORE STRINGENT REQUIREMENTS MUST GOVERN. CONTRACTOR MUST NOTIFY THE ENGINEER OF DISCREPANCIES AND OBTAIN DIRECTION PRIOR TO PROCEEDING. NOTES ON INDIVIDUAL STRUCTURAL DRAWINGS MUST TAKE PRIORITY OVER GENERAL STRUCTURAL NOTES. NOTED DIMENSIONS TAKE PRECEDENCE OVER SCALED DIMENSIONS. DO NOT SCALE DRAWINGS. TYPICAL DETAILS MAY NOT NECESSARILY BE INDICATED AS TYP ON THE PLANS BUT MUST APPLY AS SHOWN OR DESCRIBED IN THE DETAILS.

1 ALL CONSTRUCTION MUST COMPLY WITH THE 2018 INTERNATIONAL BUILDING CODE (IBC) AS AMENDED AND ADOPTED BY THE MUNICIPALITY OF ANCHORAGE.

SAFETY - THE CONTRACTOR IS RESPONSIBLE FOR MEETING ALL FEDERAL, STATE AND LOCAL SAFETY STANDARDS. THE CONTRACTOR IS IN CHARGE OF ALL SAFETY MATTERS ON AND AROUND THE JOB SITE.

STRUCTURAL DESIGN DATA
STRUCTURAL DESIGN IS IN ACCORDANCE WITH THE IBC AS AMENDED AND ADOPTED BY THE MUNICIPALITY OF ANCHORAGE. RISK CATEGORY IS II IN ACCORDANCE WITH IBC SECTION 1604.5. 1

THE STRUCTURE HAS BEEN DESIGNED FOR THE FOLLOWING OPERATIONAL LOADS ON THE COMPLETED STRUCTURES (REFERENCE MINIMUM DESIGN LOADS AND ASSOCIATED CRITERIA FOR BUILDINGS AND OTHER STRUCTURES (ASCE 7-16) FOR VARIABLE DEFINITIONS). CONTRACTOR IS RESPONSIBLE FOR TEMPORARY SHORING AND BRACING DURING CONSTRUCTION.

SNOW LOADS: GROUND SNOW (Pg) = 129 PSF (VIA ALT MEANS AND METHODS) 1
Is=1.0, Ct=1.2, Ce=1.0
ROOF SNOW (Ps) = 86 PSF SLOPED

WIND LOADS: BASIC WIND SPEED (3-SECOND GUST, Vult)=138 MPH, OPEN BUILDING

SEISMIC LOADS: SITE CLASS D, SEISMIC DESIGN CATEGORY D, Ss=1.5, S1=0.71, Sds=1.0, Sd1=0.80, Ie=1.0, R=1, Cs=1.0, BASE SHEAR=13.4 KIPS.

FLOOD LOADS: 2.0 FT INUNDATION DEPTH, WATER SPEED OF 2 FT/S
SHEAR PER COLUMN = 290 LBS

LATERAL ANALYSIS IS LINEAR STATIC. LATERAL FORCES ARE CARRIED BY THE FLEXIBLE ROOF DIAPHRAGM TO THE COMPRESSION-ONLY KNEE BRACES AND PIN-BASE TIMBER COLUMNS. MOMENTS, SHEARS, AND ROTATIONAL FORCES ARE DELIVERED TO THE FOUNDATION BY THE WOOD FRAME IN PROPORTION TO THEIR TRIBUTARY AREA.

FOUNDATIONS
FOUNDATIONS ARE DESIGNED FOR A MAXIMUM SOIL BEARING PRESSURE OF 2,000 PSF UNDER SUSTAINED LOADING.

FOUNDATION SOILS MUST BE PREPARED IN ACCORDANCE WITH THE IBC AND THE PROJECT GEOTECHNICAL INVESTIGATION REPORT "GEOTECHNICAL ENGINEERING REPORT LIONS CLUB PARK PICNIC SHELTER, GIRDWOOD, ALASKA", DATED OCTOBER 2022, BY SHANNON & WILSON.

ALL ORGANIC, FROZEN, OR OTHER UNSUITABLE MATERIALS MUST BE REMOVED FROM SUB-GRADE AND REPLACED WITH COMPACTED GRANULAR NON-FROST SUSCEPTIBLE (NFS) FILL. ALL FOOTINGS MUST BE FOUNDED UPON UNDISTURBED, NATURAL SUB-GRADE OR COMPACTED NFS FILL WITH A MINIMUM ALLOWABLE BEARING CAPACITY OF 2,000 PSF.

SUB-GRADES BENEATH FOOTINGS AND SLABS MUST BE COMPACTED TO A MINIMUM OF 95 PERCENT OF THE MAXIMUM DRY DENSITY AS MEASURED BY ASTM D1557. BACKFILL AROUND AND ABOVE ALL FOUNDATION ELEMENTS MUST BE COMPACTED TO A MINIMUM OF 90 PERCENT OF MAXIMUM DRY DENSITY.

SPECIAL INSPECTION
SPECIAL INSPECTION IS NOT REQUIRED. REFERENCE IBC SECTION 1704.2, EXCEPTION 1.

SUBMITTALS
THE CONTRACTOR MUST REVIEW, STAMP WITH THEIR APPROVAL, DATE AND SIGN ALL SHOP DRAWINGS AND SUBMITTALS REQUIRED BY THE CONTRACT DRAWINGS PRIOR TO SUBMITTAL TO THE ENGINEER. AT THE TIME OF SUBMISSION, THE CONTRACTOR MUST INFORM THE ENGINEER IN WRITING OF ANY DEVIATION IN THE SHOP DRAWINGS FROM THE REQUIREMENTS OF THE CONTRACT DRAWINGS. DIMENSIONS AND QUANTITIES ARE THE CONTRACTOR'S RESPONSIBILITY AND WILL NOT BE REVIEWED.

STRUCTURAL CONCRETE
ALL CONCRETE CONSTRUCTION MUST CONFORM TO ACI 301, STANDARD SPECIFICATION FOR STRUCTURAL CONCRETE, AS MODIFIED BY IBC SECTION 1905 AND LOCAL ADOPTED AMENDMENTS.

ALL CAST-IN-PLACE CONCRETE:
1. EXPOSURE F2, S0, W0, C1 (ACI 318-14, 19.3.1.1)
2. MINIMUM 28-DAY COMPRESSIVE STRENGTH = 4,500 PSI
3. MAXIMUM AGGREGATE SIZE = 3/4"
4. MAXIMUM WATER-CEMENT RATIO = 0.45
5. MAXIMUM CHLORIDE ION CONTENT = 1.00%
6. TARGET AIR CONTENT = 6% (+/-1%).

CONCRETE MUST BE PROPORTIONED TO ACHIEVE A WORKABLE MIX THAT CAN BE PLACED WITHOUT SEGREGATION OR EXCESS FREE SURFACE WATER.

APPLICABLE ASTM STANDARDS:
PORTLAND CEMENT = ASTM C150
AGGREGATE = ASTM C33, NORMAL WEIGHT
WATER = ASTM C1602
WATER REDUCING ADMIXTURE = ASTM C494, TYPE A

CONCRETE PLACED DURING COLD WEATHER MUST CONFORM TO ACI 306. ALL COLD WEATHER CONCRETE AND CONCRETE EXPOSED TO WEATHER MUST CONTAIN AIR ENTRAINMENT PER ACI 318-14 TABLE 19.3.3.1.

THE FOLLOWING MINIMUM CONCRETE COVER MUST BE PROVIDED FOR REINFORCEMENT FOR CAST-IN-PLACE CONCRETE:

A. CONCRETE CAST AGAINST EARTH	3-INCHES
B. CONCRETE EXPOSED TO EARTH OR WEATHER -#5 AND SMALLER	1½-INCHES

ALL CONCRETE REINFORCING MUST BE DETAILED, FABRICATED, LABELED, SUPPORTED AND SPACED IN FORMS AND SECURED IN PLACE IN ACCORDANCE WITH THE LATEST EDITIONS OF ACI 315, ACI 318, CRSI MSP-1 AND ACI SP-66. DOWELS MUST MATCH SIZE AND NUMBER OF MAIN REINFORCING.

TYPICAL REINFORCING BARS MUST BE ASTM A615, GRADE 60. LAP SPLICES MUST BE CLASS B LAPS PER ACI (63 X BAR DIAMETER). LAP SPLICES MAY ALSO ACCOMPLISHED USING MECHANICAL DEVICES THAT DEVELOP 125% OF THE STRENGTH OF THE REBAR.

CHECKED SHOP DRAWINGS SHOWING REINFORCING DETAILS, INCLUDING STEEL SIZES, SPACING AND PLACEMENT MUST BE SUBMITTED TO THE ENGINEER FOR REVIEW PRIOR TO FABRICATION. SUBMIT MIX DESIGNS FOR REVIEW PRIOR TO USE.

EMBEDDED ITEMS (CONDUIT AND SLEEVES) MUST NOT BE EMBEDDED IN OR PASS THROUGH CONCRETE WITHOUT APPROVAL. ALUMINUM ITEMS MUST NOT BE EMBEDDED IN CONCRETE. SUBMIT CONDUIT LAYOUT AND EMBEDDED ITEM PLANS FOR REVIEW PRIOR TO PLACING CONCRETE.

STRUCTURAL STEEL
MATERIALS:
SHAPES & PLATE: ASTM A36
HEADED ANCHOR RODS: ASTM F1554, GRADE 36 1

ALL DETAILING, FABRICATION AND ERECTIONS MUST CONFORM TO AISC SPECIFICATIONS AND CODES, LATEST EDITION. FABRICATOR MUST PARTICIPATE IN THE AISC QUALITY CERTIFICATION PROGRAM, BE CERTIFIED BY THE MUNICIPALITY OF ANCHORAGE, OR SPECIAL INSPECTIONS AT THE CONTRACTOR'S EXPENSE, MUST BE PROVIDED IN THE FABRICATION SHOP.

ALL WELDING MUST BE DONE BY QUALIFIED WELDERS AND MUST CONFORM TO THE AWS D1.1 AND D1.8, LATEST EDITIONS. ALL WELDING ELECTRODES MUST BE PROPERLY CONDITIONED 70 KSI MINIMUM TENSILE STRENGTH, WITH DIFFUSED HYDROGEN LEVELS OF 16ml/g (H16) OR LESS IN ACCORDANCE WITH AWS A4.3.

WELDS NOT SPECIFIED MUST BE SHOP-PERFORMED CONTINUOUS OR ALL-AROUND 3/16" FILLET WELDS.

THERE MUST BE NO FIELD CUTTING OF STRUCTURAL STEEL MEMBERS FOR THE WORK OF OTHER TRADES WITHOUT THE PRIOR APPROVAL OF THE ENGINEER.

ALL STEEL SHALL BE HOT-DIP GALVANIZED PER ASTM A123 AND POWDER COAT BLACK OVER GALVANIZING. TOUCH-UP AND REPAIR GALVANIZATION MUST CONFORM TO ASTM A780. FASTENERS MUST COMPLY WITH ASTM A153.

THE CONTRACTOR MUST SUBMIT SHOP DRAWINGS TO THE ENGINEER FOR REVIEW. THESE DRAWINGS MUST BE CHECKED BY THE CONTRACTOR BEFORE SUBMITTAL AND MUST SHOW SHOP FABRICATION DETAILS, FIELD ASSEMBLY DETAILS, AND ERECTION DIAGRAMS FOR ALL STRUCTURAL STEEL. ALSO SUBMIT WELDERS' QUALIFICATIONS.

STRUCTURAL TIMBER
MATERIALS:

POST AND HEAVY TIMBERS:	ALASKA CEDAR NO. 1
T&G DECKING:	HEM-FIR NO. 1, COMMERICAL GRADE
ROOF SHEATHING:	APA RATED SHEATHING, EXTERIOR, SPAN RATED 40/20, 5/8-INCH THICK

SIZES SHOWN ON PLANS ARE NOMINAL DIMENSIONS. POST AND HEAVY TIMBERS SHALL BE STANDARD DRESSED SAWN LUMBER. ACTUAL LUMBER DIMENSIONS MAY VARY. TAPER AS REQUIRED TO FIT CONNECTIONS.

INSTALL ROOF SHEATHING WITH THE LONG DIMENSION ACROSS SUPPORTS. STAGGER ADJACENT PANELS 48-INCHES. ALLOW 1/8-INCH SPACING AT PANEL ENDS AND PANEL EDGES, UNLESS OTHERWISE RECOMMENDED BY THE PANEL MANUFACTURER.

SHEATHING MUST BE USED IN ACCORDANCE WITH THE RECOMMENDATIONS OF APA, THE ENGINEERED WOOD ASSOCIATION. PLACE NAILS 3/8-INCH FROM EDGE OF PANELS

ALL ROOF DIAPHRAGMS MUST BE NAILED:
PANEL EDGES: 10d NAILS AT 6-INCHES ON-CENTER
INTERMEDIATE SUPPORTS: 10d @ 12-INCHES ON-CENTER

DECK MUST BE NAILED:
INTERMEDIATE AND END SUPPORTS: (2) 10d NAILS

THERE MUST BE NO FIELD CUTTING OF STRUCTURAL TIMBER MEMBERS FOR THE WORK OF OTHER TRADES WITHOUT THE PRIOR REVIEW OF THE ENGINEER.

ALL AWW SHEATHING AND LUMBER MUST BE PRESSURE TREATED IN ACCORDANCE WITH AWPA U1 STANDARD:
CAT UC3b FOR EXTERIOR CONST NOT IN CONTACT WITH GROUND

PRE-MANUFACTURED HARDWARE MUST BE SIMPSON OR APPROVED EQUAL. FASTENERS FOR METAL CONNECTORS MUST CONFORM TO MANUFACTURER'S RECOMMENDATIONS FOR THE HIGHEST CAPACITY AVAILABLE FOR EACH CONNECTOR, UNLESS OTHERWISE NOTED.

@	At	ASCE	American Society of Civil Engineers	CLR	Clear	GALV	Galvanized	MFR	Manufacturer	SCH	Schedule	UON	Unless Otherwise Noted
AB	Anchor Bolts	ASTM	American Society for Testing and Materials	COL	Column	GLB	Glue-Laminated Beam	(N)	New	SIM	Similar	VERT	Vertical
ACI	American Concrete Institute	AWPA	American Wood Protection Association	CONC	Concrete	HORZ	Horizontal	OC	On-Center	SQ	Square	W/	With
ADD'L	Additional	AWS	American Welding Society	CONT	Continuous, Continue	HSS	Hollow Structural Steel	OH	Overhead	STL	Steel	W/O	Without
ADH	Adhesive	AWW	Allweather Wood	DBN	Diaphragm Boundary Nailing	IBC	International Building Code	OPNG	Opening	T&B	Top and Bottom	W	Wide-Flange, Wide
AFF	Above Finish Floor	BLDG	Building	(E)	Existing	INT	Interior	PL	Plate	T&G	Tongue and Groove	W/C	Water / Cement Ratio
AHJ	Authority Having Jurisdiction	BLKG	Blocking	EA	Each	LAG	Lag Screw	PLS	Places	T.O.	Top of	W.P.	Work Point
AISC	American Insitute of Steel Construction	BM	Beam	EQ	Equal. Earthquake	LOC	Location	PSF	Pounds-per-square-foot	T.O.B.	Top of Beam	WWR	Welded Wire Reinforcement
ALT	Alternate	BOT	Bottom	EW	Each Way	LONG	Longitudinal	PSI	Pounds-per-square-inch	T.O.S.	Top of Steel		
AR	Anchor Rod	BTWN	Between	EXP	Expansion	MAX	Maximum	REQ'D	Required	T.O.W.	Top of Wall		
ARCH	Architect	CL	Center-Line	FDN	Foundation	MEZZ	Mezzanine	RO	Rough Opening	TRANS	Transverse		
				FF	Finished Floor	MIN	Minimum	SBN	Shearwall Boundary Nailing	TYP	Typical		

100% FINAL DOCUMENTS

ReidMiddleton
4300 B St., Suite 302 Anchorage, AK 99503
Phone 907 562-3439 - www.reidmiddleton.com
Corporate License #AECC598

© Copyright Reid Middleton, Inc. 2025

STATE OF ALASKA 49TH ELLEN E. HAMEL No. T13259 REGISTERED PROFESSIONAL ENGINEER
02/26/25

GIRDWOOD LIONS CLUB PARK SHELTER
GIRDWOOD, ALASKA

REVISION SCHEDULE		
#	DESCRIPTION	DATE
1	PERMITTING	03/18/25

DATE : 02/26/25
PROJECT NO : 402022.085
DRAWN BY : EH
CHECKED BY : DS
COPYRIGHT : 2025

SHEET DESCRIPTION:
STRUCTURAL GENERAL NOTES & ABBREVIATIONS

SHEET NO:
S0.1

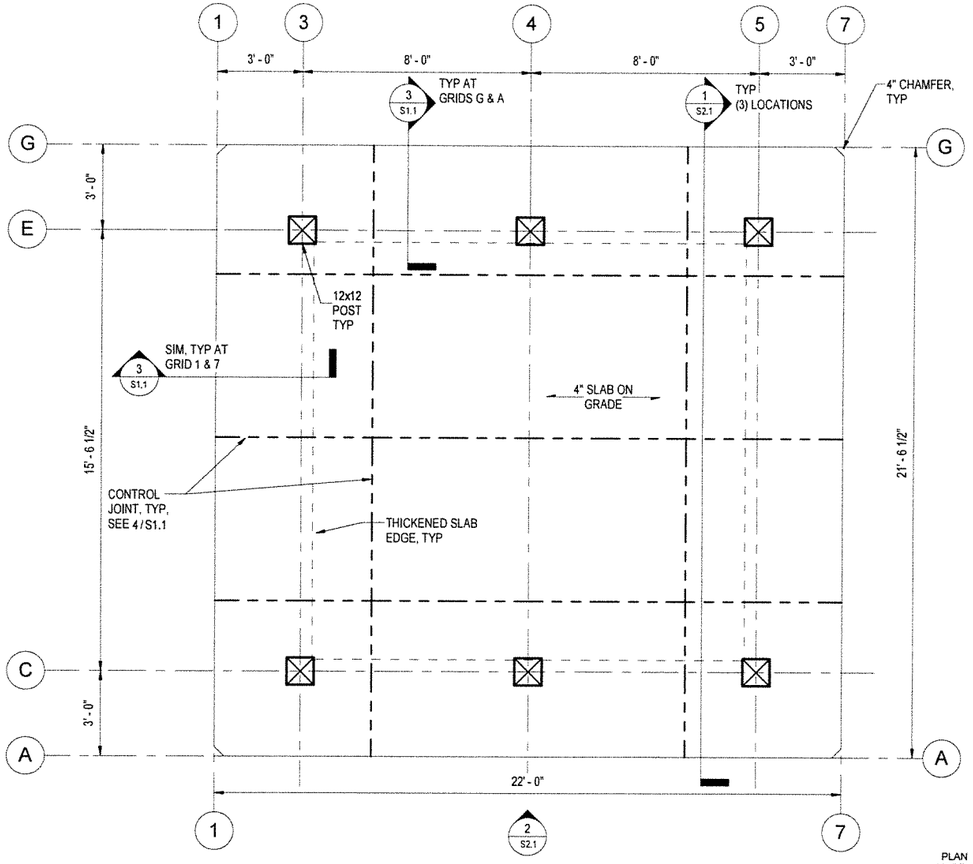

1 S1.1 FOUNDATION PLAN
3/8" = 1'-0"

PLAN NORTH

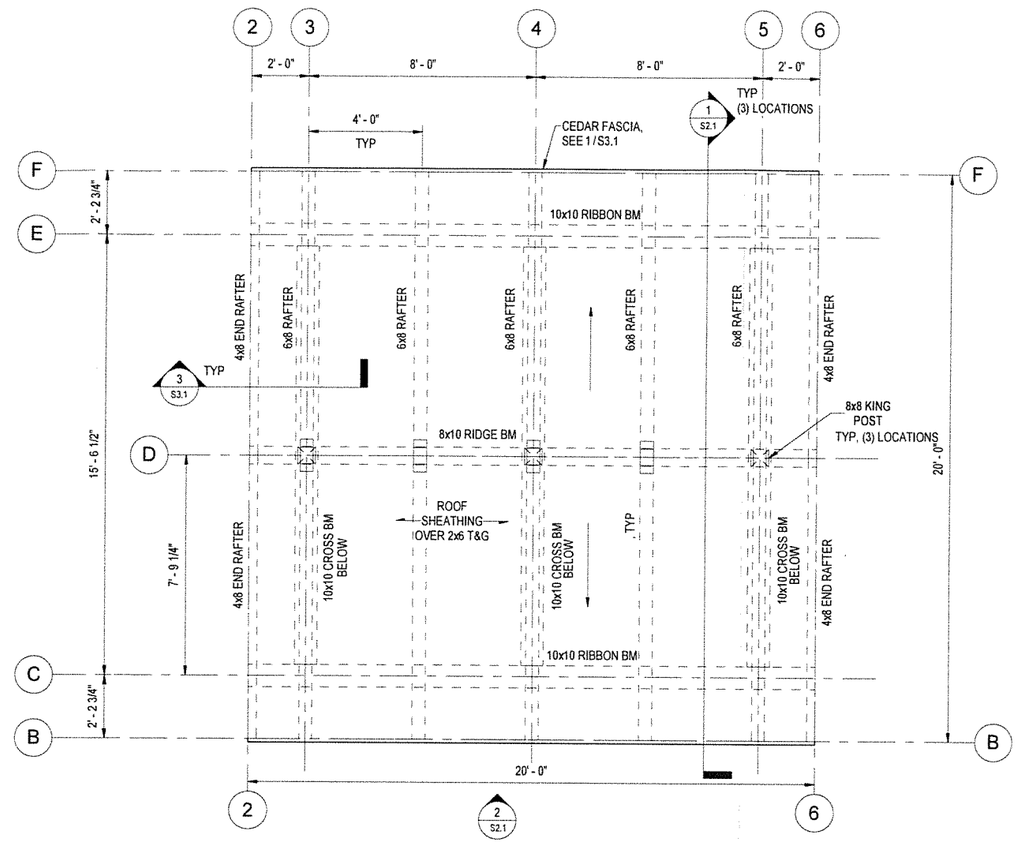

2 S1.1 ROOF FRAMING PLAN
3/8" = 1'-0"

PLAN NORTH

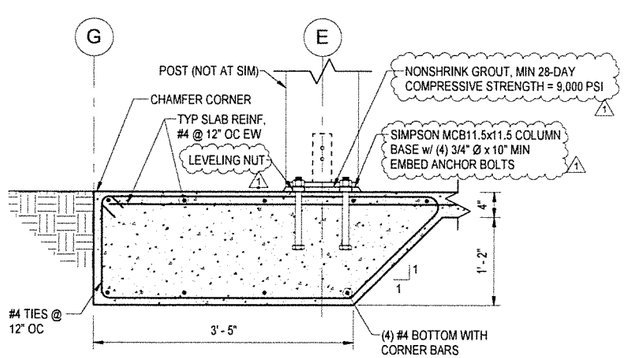

3 S1.1 SECTION AT SLAB PERIMETER
1" = 1'-0"

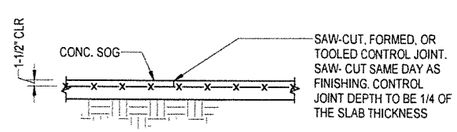

TYPICAL CRACK CONTROL JOINT (CCJ)

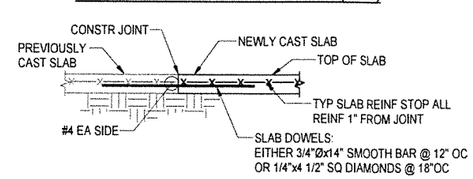

TYPICAL CONSTRUCTION JOINT (CJ)

NOTES:
1. CONSTRUCTION JOINTS MAY BE USED AT ANY CONTROL JOINT.
2. LOCATE JOINTS BTWN 24x & 36x SLAB THICKNESS "t" IN BOTH DIRECTIONS.
3. CREATE SQUARE OR REGTANGULAR SPACES BTWN JOINTS (NOT TRIANGULAR). DO NOT EXCEED 1.5:1 ASPECT RATIO IN RECTANGULAR PORTIONS. DO NOT CREATE T- OR L-SHAPED PORTIONS. LOCATE JOINTS AT EACH RE-ENTRANT CORNER OR REINF W/ #4x4'-0" DIAG BAR.

4 S1.1 TYP SOG JOINT DETAILS
3/4" = 1'-0"

100% FINAL DOCUMENTS

ReidMiddleton
4300 B St., Suite 302 Anchorage, AK 99503
Phone 907 562-3439 - www.reidmiddleton.com
Corporate License #AECC598
© Copyright Reid Middleton, Inc. 2025

STATE OF ALASKA 49TH ELLEN E. HAMEL No. T13259 REGISTERED PROFESSIONAL ENGINEER
02/26/25

GIRDWOOD LIONS CLUB PARK SHELTER
GIRDWOOD, ALASKA

REVISION SCHEDULE		
#	DESCRIPTION	DATE
1	PERMITTING	03/18/25

DATE : 02/26/25
PROJECT NO : 402022.085
DRAWN BY : GC
CHECKED BY : EH
COPYRIGHT : 2025

SHEET DESCRIPTION:
PLANS & SLAB DETAILS

SHEET NO:
S1.1

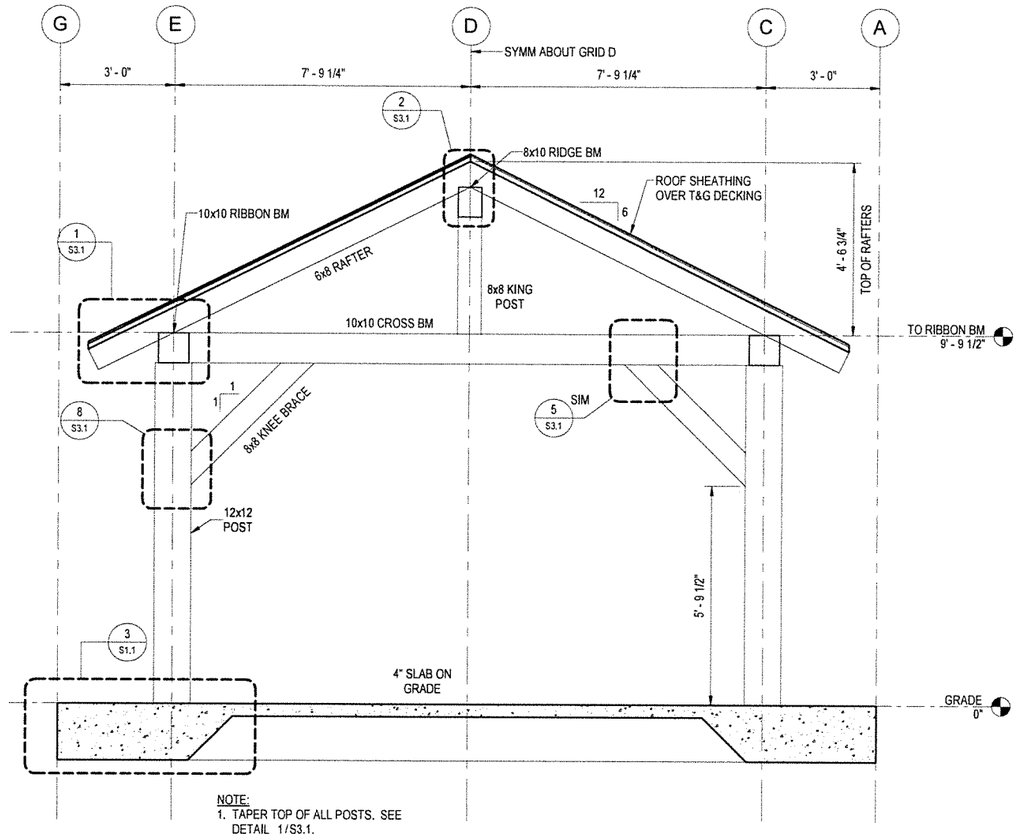

NOTE:
1. TAPER TOP OF ALL POSTS. SEE DETAIL 1/S3.1.

1 / S2.1 SHELTER SECTION
1/2" = 1'-0"

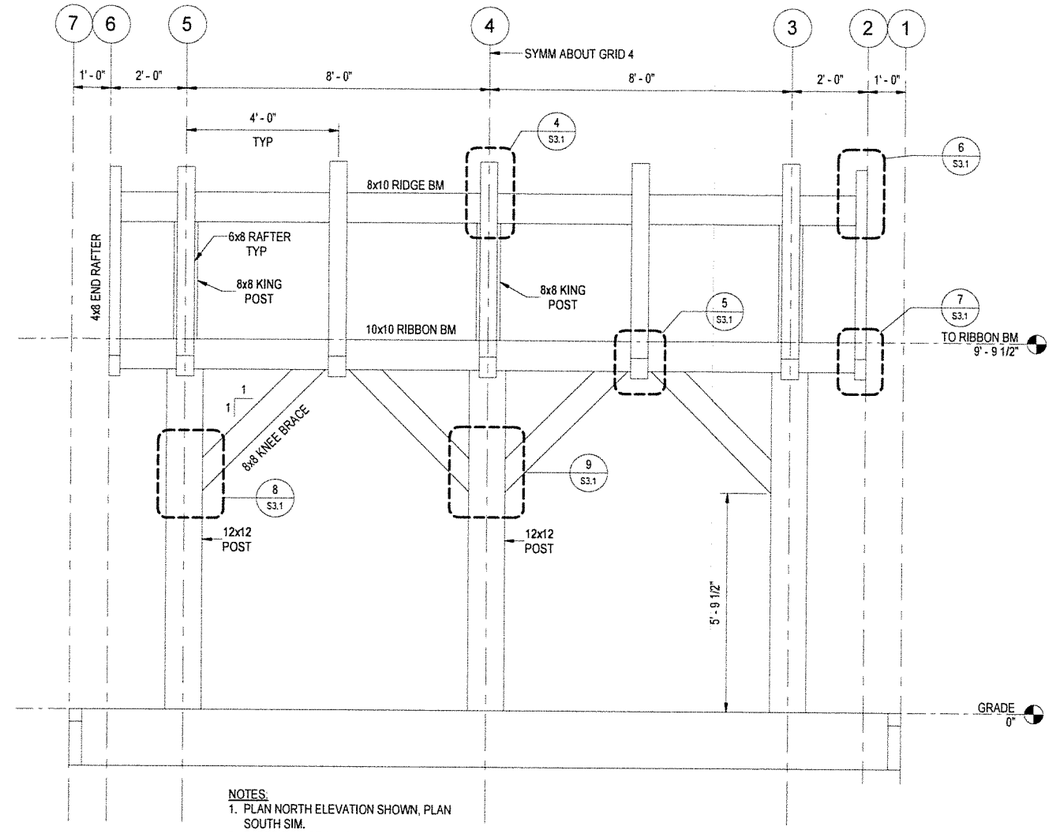

NOTES:
1. PLAN NORTH ELEVATION SHOWN, PLAN SOUTH SIM.
2. TAPER TOP OF ALL POSTS. SEE 1/S3.1.
3. DECKING AND ROOF SHEATHING NOT SHOWN FOR CLARITY.

2 / S2.1 PLAN NORTH ELEVATION
1/2" = 1'-0"

100% FINAL DOCUMENTS

ReidMiddleton
4300 B St., Suite 302 Anchorage, AK 99503
Phone 907 562-3439 - www.reidmiddleton.com
Corporate License #AECC598

© Copyright Reid Middleton, Inc. 2025

STATE OF ALASKA
49 TH
ELLEN E. HAMEL
No. T13259
REGISTERED PROFESSIONAL ENGINEER
02/26/25

GIRDWOOD LIONS CLUB PARK SHELTER
GIRDWOOD, ALASKA

REVISION SCHEDULE		
#	DESCRIPTION	DATE

DATE : 02/26/25
PROJECT NO : 402022.085
DRAWN BY : GC
CHECKED BY : EH
COPYRIGHT : 2025

SHEET DESCRIPTION:
SHELTER SECTION AND ELEVATION

SHEET NO:
S2.1

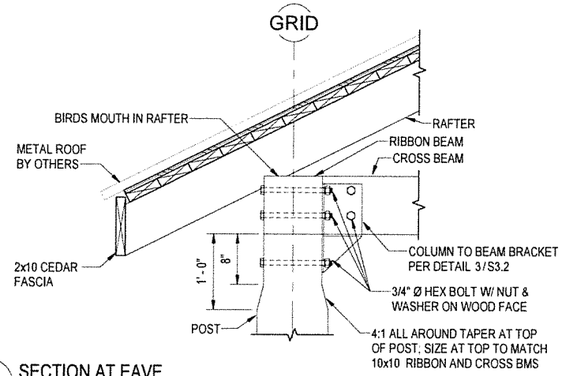

1 S3.1 SECTION AT EAVE
1" = 1'-0"

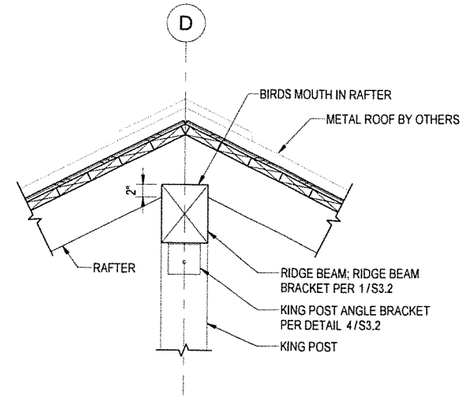

2 S3.1 RIDGE W/ ROOFING
1" = 1'-0"

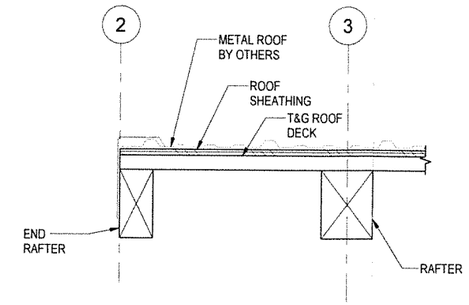

3 S3.1 GABLE SECTION
1 1/2" = 1'-0"

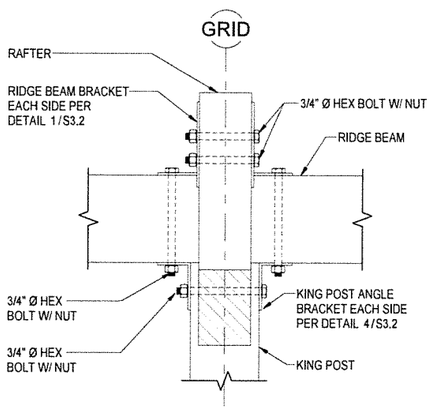

4 S3.1 RAFTER CONN TO RIDGE BEAM
1 1/2" = 1'-0"

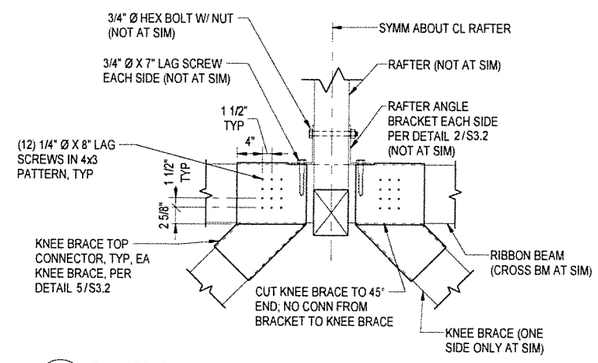

5 S3.1 RAFTER CONN TO RIBBON BEAM
1" = 1'-0"

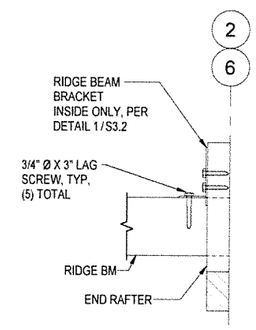

6 S3.1 END RAFTER TOP CONN
1" = 1'-0"

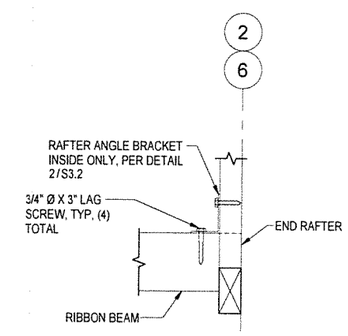

7 S3.1 END RAFTER BOT CONN
1" = 1'-0"

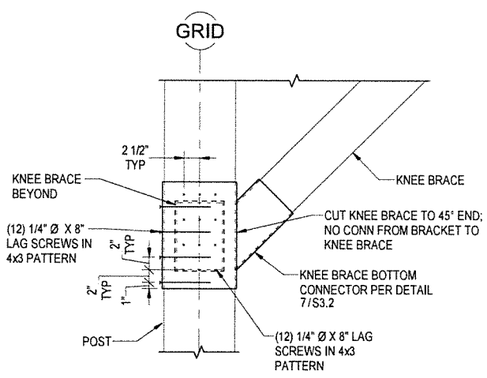

8 S3.1 KNEE BRACE BOTTOM CONNECTION
1" = 1'-0"

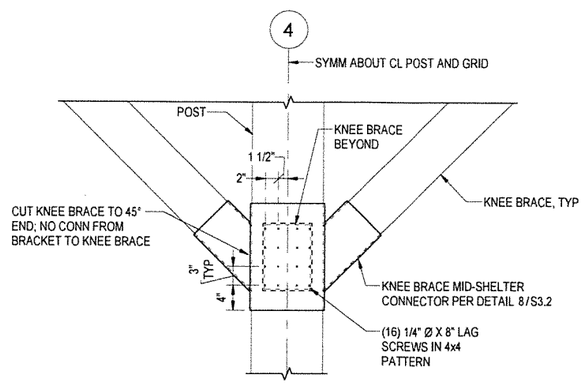

9 S3.1 KNEE BRACE BOTTOM CONNECTION AT MID-SHELTER
1" = 1'-0"

100% FINAL DOCUMENTS

ReidMiddleton
4300 B St., Suite 302 Anchorage, AK 99503
Phone 907 562-3439 - www.reidmiddleton.com
Corporate License #AECC598

© Copyright Reid Middleton, Inc. 2025

STATE OF ALASKA 49TH ELLEN E. HAMEL No. T13259 REGISTERED PROFESSIONAL ENGINEER
02/26/25

GIRDWOOD LIONS CLUB PARK SHELTER
GIRDWOOD, ALASKA

REVISION SCHEDULE		
#	DESCRIPTION	DATE

DATE : 02/26/25
PROJECT NO : 402022.085
DRAWN BY : GC
CHECKED BY : EH
COPYRIGHT : 2025

SHEET DESCRIPTION:
SHELTER DETAILS

SHEET NO:
S3.1

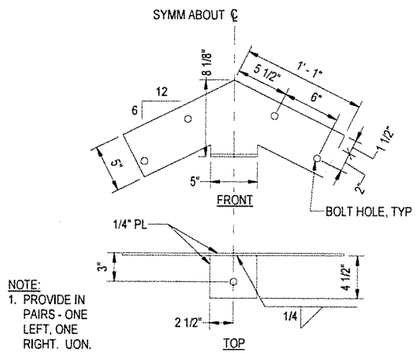

NOTE:
1. PROVIDE IN PAIRS - ONE LEFT, ONE RIGHT. UON.

1 S3.2 RIDGE BEAM BRACKET
1 1/2" = 1'-0"

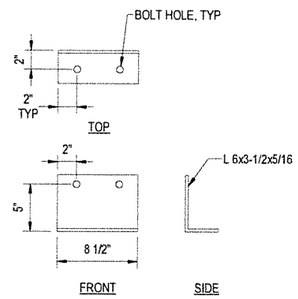

NOTE:
1. PROVIDE IN PAIRS - ONE LEFT, ONE RIGHT. UON.

2 S3.2 RAFTER ANGLE BRACKET
1 1/2" = 1'-0"

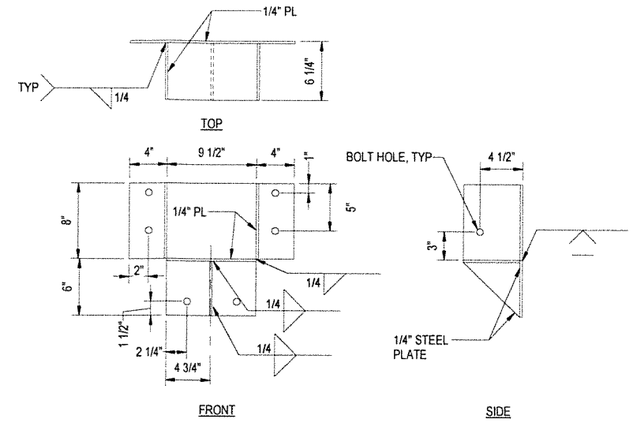

3 S3.2 COLUMN TO BEAM BRACKET
1 1/2" = 1'-0"

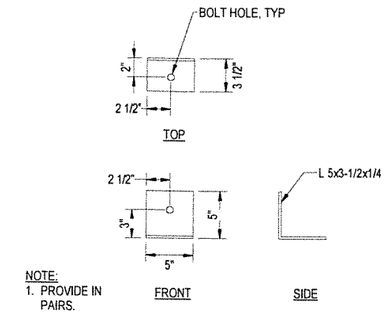

NOTE:
1. PROVIDE IN PAIRS.

4 S3.2 KING POST ANGLE BRACKET
1 1/2" = 1'-0"

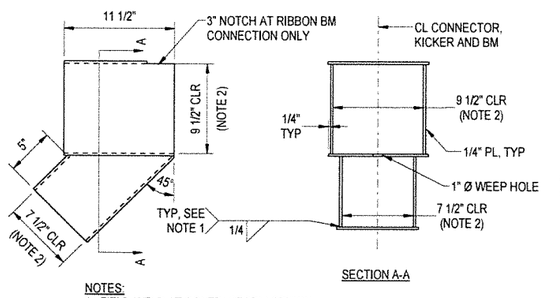

NOTES:
1. FIELD WELD AT CONTRACTOR'S OPTION.
2. OVERSIZE ALL "CLR" DIMENSIONS BY 0.10" FOR FIT-UP TO SAWN LUMBER.
3. SEE DETAIL 5/S3.1 FOR SCREW HOLES TO BEAM.

5 S3.2 KNEE BRACE TOP CONNECTOR
1 1/2" = 1'-0"

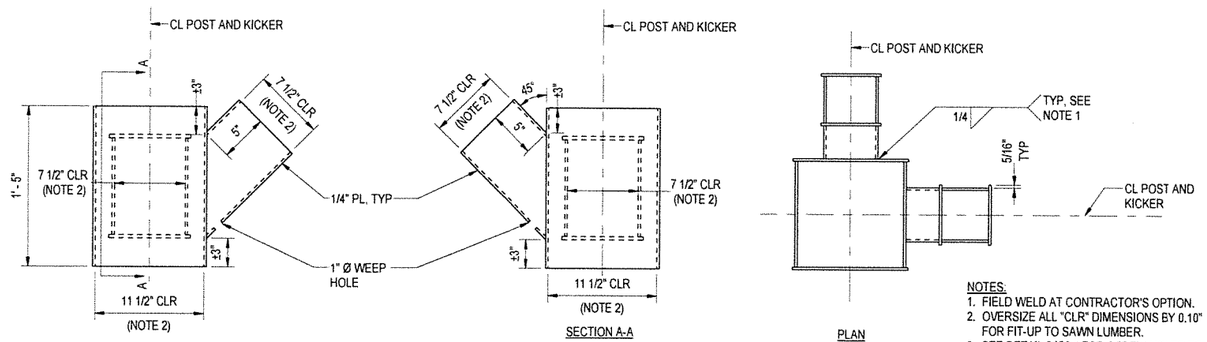

NOTES:
1. FIELD WELD AT CONTRACTOR'S OPTION.
2. OVERSIZE ALL "CLR" DIMENSIONS BY 0.10" FOR FIT-UP TO SAWN LUMBER.
3. SEE DETAIL 8/S3.1 FOR SCREW HOLES TO COLUMN.

7 S3.2 KNEE BRACE BOTTOM CONNECTOR
1 1/2" = 1'-0"

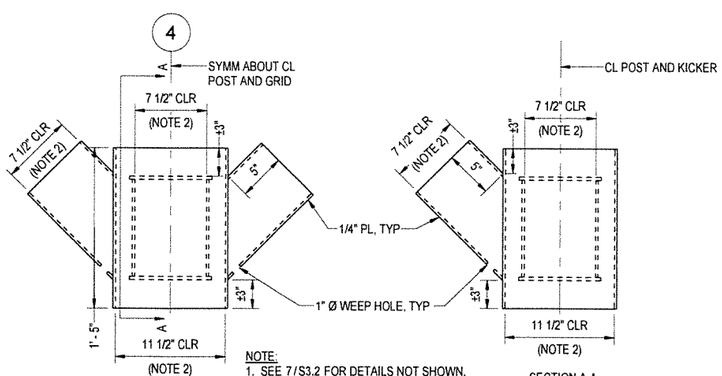

NOTE:
1. SEE 7/S3.2 FOR DETAILS NOT SHOWN.
2. OVERSIZE ALL "CLR" DIMENSIONS BY 0.10" FOR FIT-UP TO SAWN LUMBER.
3. SEE 9/S3.1 FOR SCREW HOLES TO COLUMN.

8 S3.2 KNEE BRACE MID-SHELTER CONNECTOR
1 1/2" = 1'-0"

SHEET NOTE:
1. ALL BOLT HOLES IN PLATES TO BE STD HOLES FOR 3/4" Ø BOLT.

100% FINAL DOCUMENTS

ReidMiddleton
4300 B St., Suite 302 Anchorage, AK 99503
Phone 907 562-3439 - www.reidmiddleton.com
Corporate License #AECC598

© Copyright Reid Middleton, Inc. 2025

STATE OF ALASKA 49TH ELLEN E. HAMEL No. T13259 REGISTERED PROFESSIONAL ENGINEER
02/26/25

GIRDWOOD LIONS CLUB PARK SHELTER
GIRDWOOD, ALASKA

REVISION SCHEDULE		
#	DESCRIPTION	DATE

DATE : 02/26/25
PROJECT NO : 402022.085
DRAWN BY : GC
CHECKED BY : EH
COPYRIGHT : 2025

SHEET DESCRIPTION:
SHELTER DETAILS

SHEET NO:
S3.2

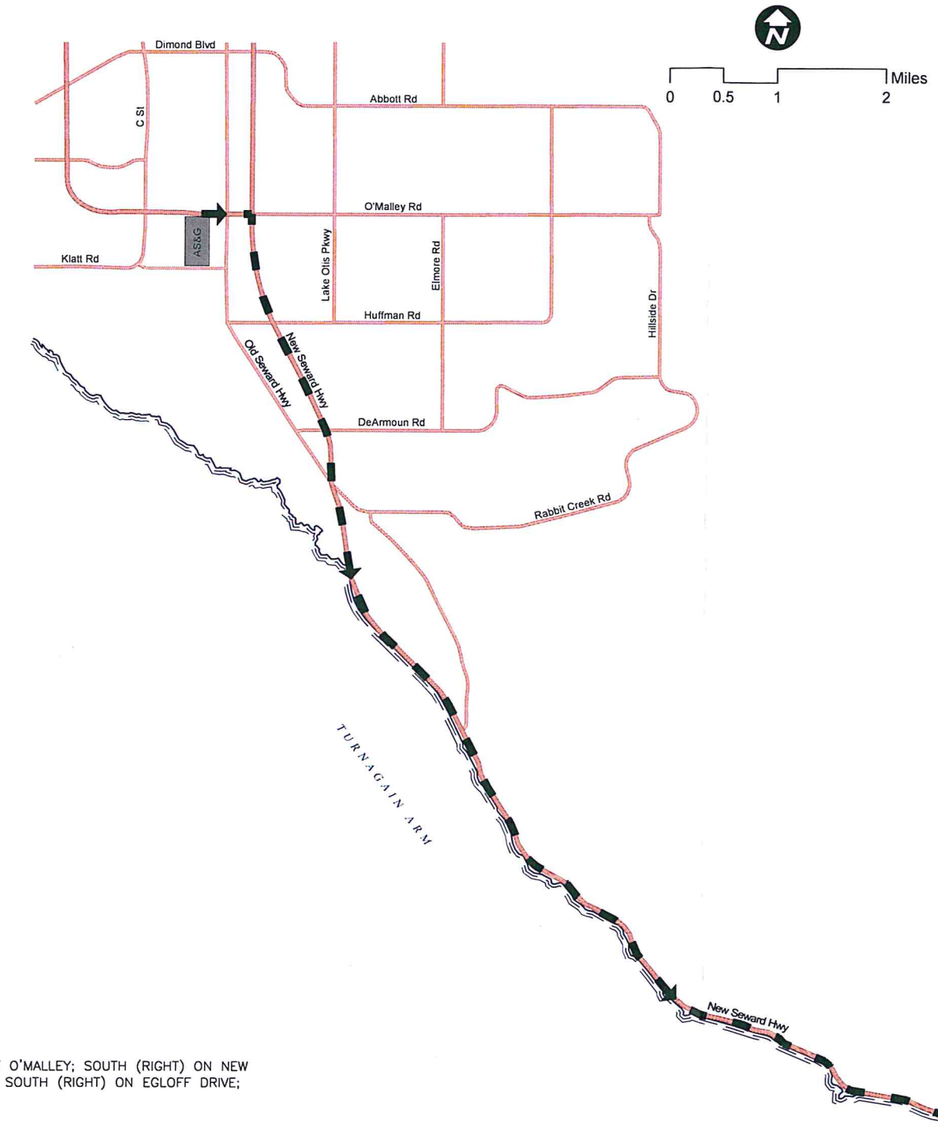

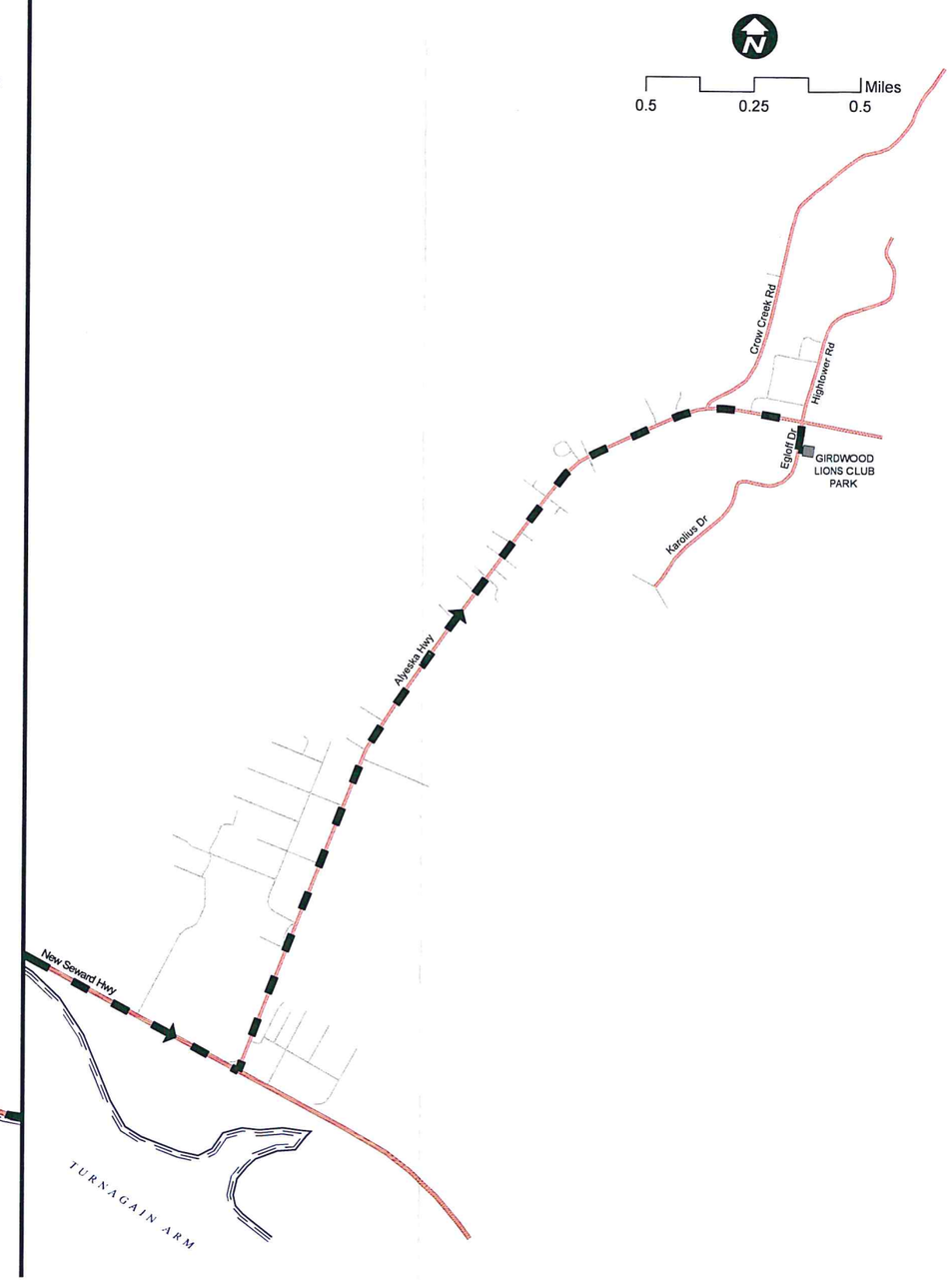

HAUL ROUTE:

IMPORT HAUL ROUTE: ANCHORAGE SAND AND GRAVEL AT O'MALLEY; SOUTH (RIGHT) ON NEW SEWARD HIGHWAY; NORTH (LEFT) ON ALYESKA HIGHWAY; SOUTH (RIGHT) ON EGLOFF DRIVE; PROJECT SITE IS ON THE LEFT.

FIELD BOOKS	BM NO.	LOCATION	ELEV.
DESIGN:			
STAKING:			
ASBUILT:			
CONTRACTOR:			
INSPECTOR:			
CONSTRUCTION RECORD	VERTICAL DATUM		

DATA	DRAWN BY	CHECKED BY	DATA	DRAWN BY	CHECKED BY
BASE	TBC		TELEPHONE	---	
TOPOGRAPHY	TBC		ELECTRIC	---	
PROFILE	---		CABLE TV	---	
SANITARY SEWER	---		TRAFFIC SIGNAL	---	
STORM SEWER	---		DESIGN	---	
WATER	---		QUANTITIES	---	
GAS	---		MUN. FINAL CHECK	---	
PLAN CHECK					

REV	DATE	DESCRIPTION	BY	REV	DATE	DESCRIPTION	BY
REVISIONS							

tbc
The Boutet Company, Inc.
601 E. 57th Place #102
Anchorage, AK. 99518
Ph. 907-522-6776
Fx. 907-522-6779
License No. AECC957
CONSULTANT

SEAL

MUNICIPALITY OF ANCHORAGE

PROJECT MANAGEMENT AND ENGINEERING DEPARTMENT

GIRDWOOD LIONS CLUB PARK SHELTER

HAUL ROUTE

HORZ SCALE: SEE SHEET
VERT SCALE: N.T.S.
DATE 02/21/2025
GRID: SE4815
ACCT. NO.
SHEET G1 of G1

TRANSIT-SUPPORTIVE DEVELOPMENT

March 2025

AHC

ANCHORAGE HOUSING CLUB

WHAT IS TRANSIT-SUPPORTIVE DEVELOPMENT?

- Transit-Supportive Development is a planning and design strategy that consists in promoting urban development that is **compact, mixed-use, pedestrian- and bicycle-friendly, and closely integrated with mass transit** by clustering jobs, housing, services, and amenities around public transport stations

DO WE WANT IT?

- At the Federal Level (HUD): "Transit-Oriented Development is increasingly recognized as having the potential to improve the quality of life for American households, by creating vibrant, livable communities in proximity to transit."
- At the Muni Level:
  - 2040 Land Use Plan (LUP), AO 2017-116
    - Goal 2:
      - Identify the most appropriate areas that can absorb more intensive use and compact housing
      - Ensure that infrastructure can serve identified sites, and that public amenities are available nearby; and
      - Support redevelopment and infill projects that can catalyze additional development.

Transit-supportive Development

Transit-supportive Development (TSD) identifies corridors where expanded public transit service will support a compact, walkable pattern of commercial, residential, and/or mixed-use development. Over time, compact development can create ridership demand to support more frequent bus service. It will give Anchorage's households more choices in how to get to work and other destinations. It also provides more opportunities to live in a walkable, accessible, and affordable neighborhood environment.

WHAT DOES TSD LOOK LIKE?

2040 LUP

St. Paul, MN

Portland, OR

Smyrna, TN

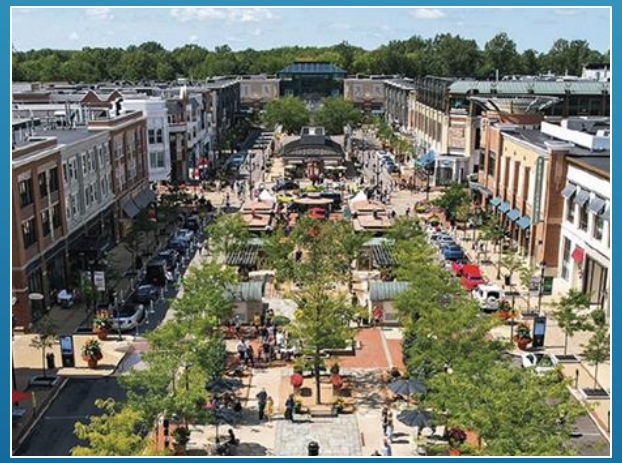

Mercer Island, WA

RELATIONSHIP BETWEEN PLANS AND CODE

- Plans: Vision and Strategy for the future shape of Anchorage
- Code: What can actually be built on the ground
- Transit-Supportive Development is in our plans, but was never implemented to be in code

We want this In the future

We can do this now

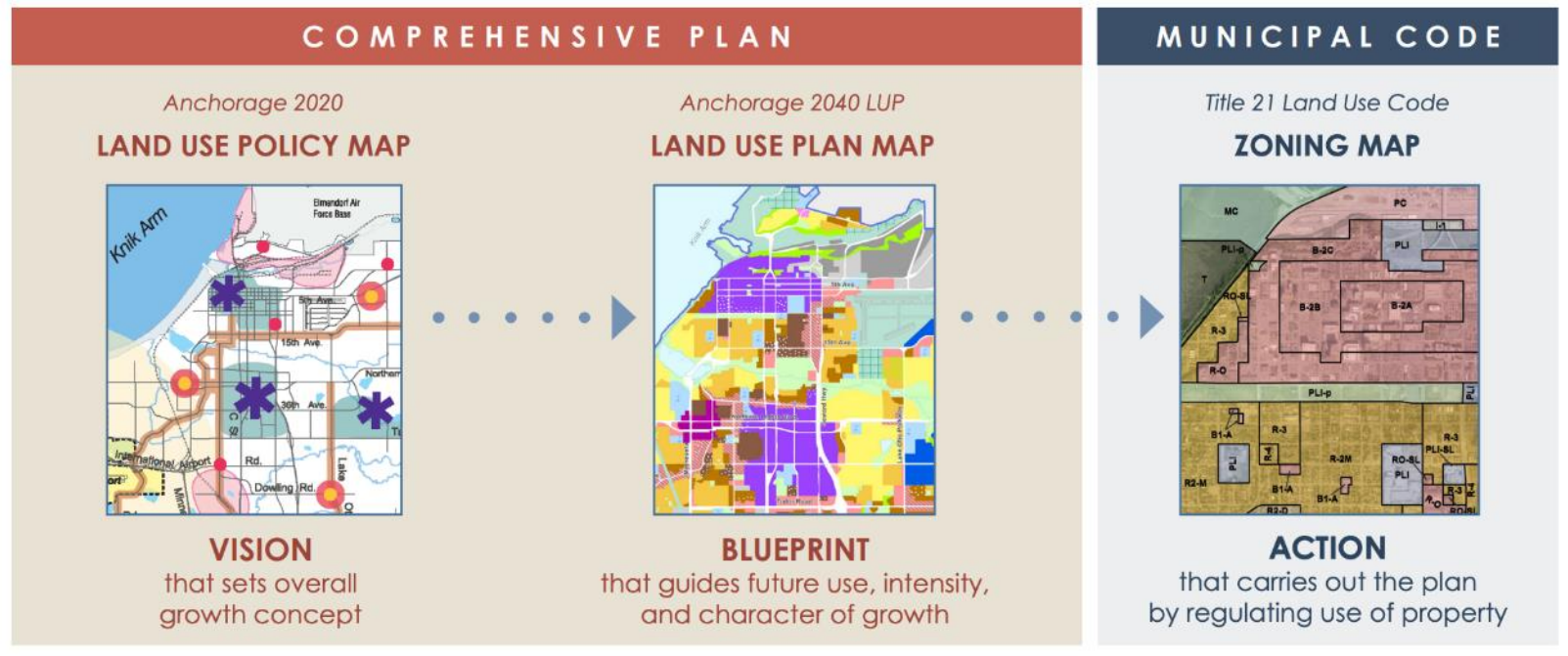

RELATIONSHIP BETWEEN PLANS AND CODE

We want this In the future
(2040 LUP)

We can do this now
(Code)

Muldoon

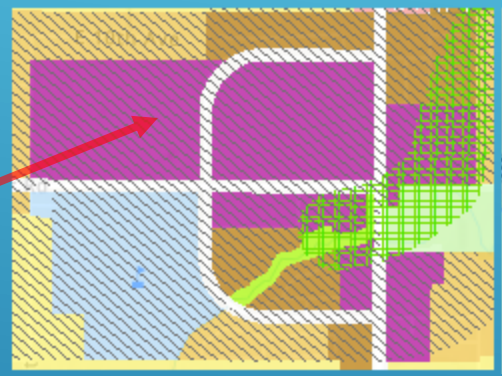

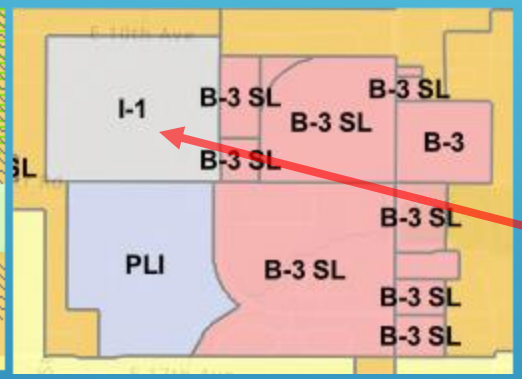

Town Centers (Purple):
Housing
Mixed-Use
Walkable

Industrial:
No Housing Allowed

Airport Heights

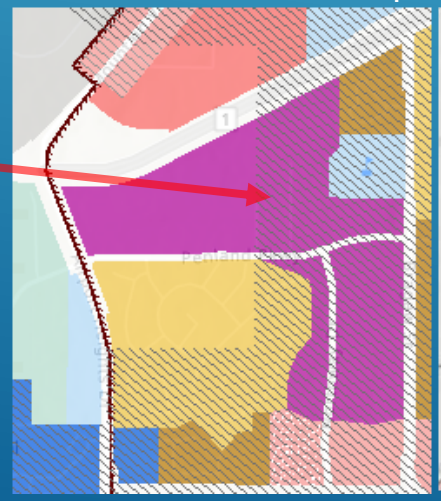

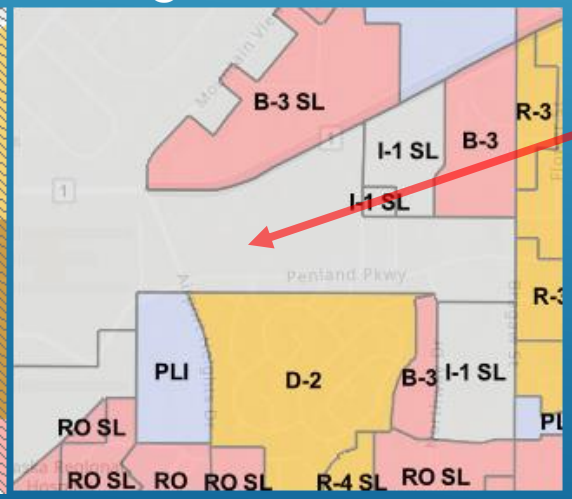

WHAT OUR EXISTING CODE RESULTS IN: (MULDOON FRED MEYER AREA)

Existing land use regulations result in this:

WHAT TSD COULD RESULT IN:

Updated land use regulations could allow this:

WHERE MIGHT THIS BE IN ANCHORAGE?

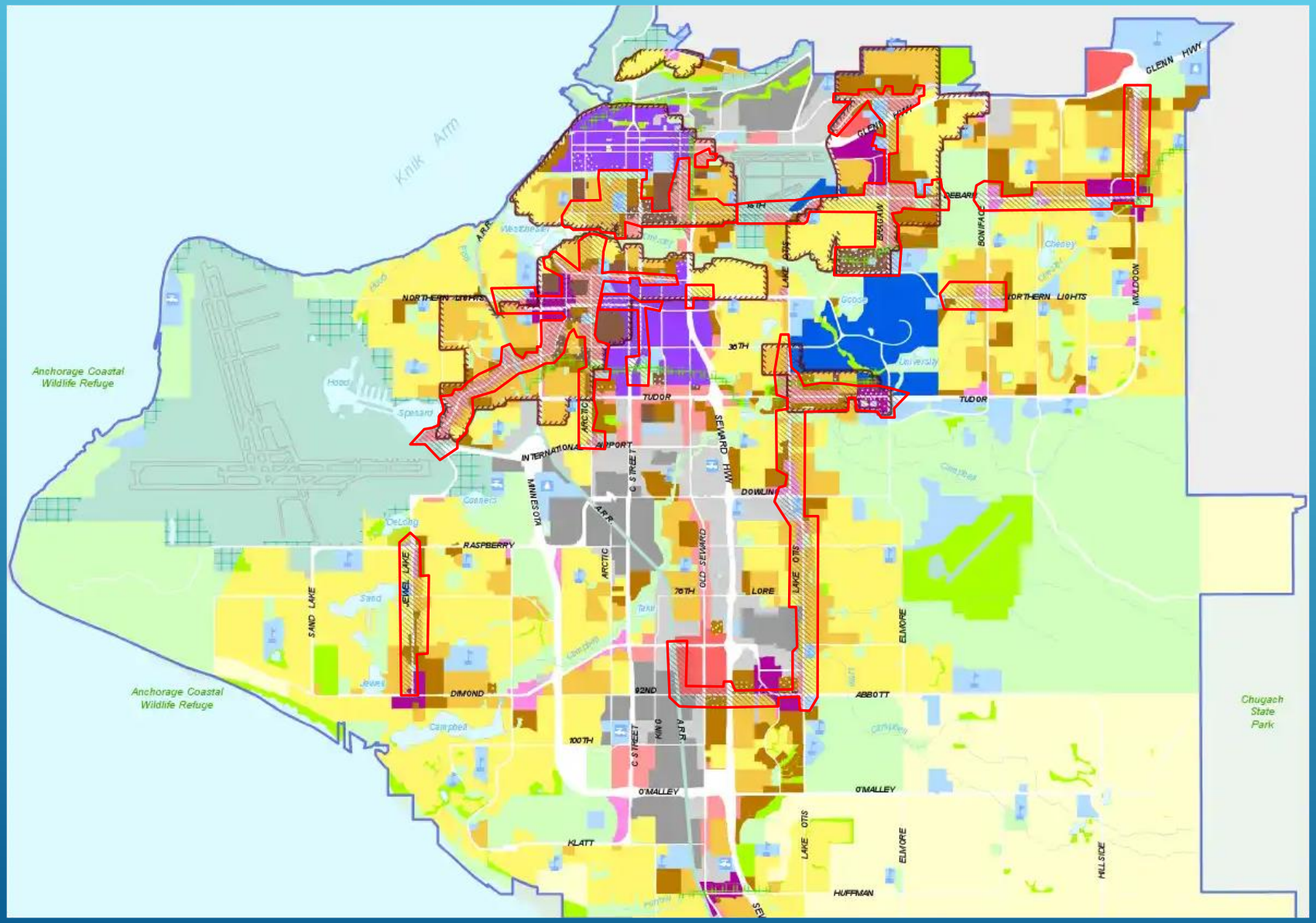

NOTE: RED LINES APPROXIMATE

ALSO, TOWN CENTERS ARE DARK PURPLE

WHO DOES IT HELP AND HOW?

- Who
  - Young families and professionals
  - Seniors Looking to downsize but stay in their community and maintain independence
  - Entrepreneurs who want to serve their community
  - Everyone who loves walking or biking to get a cup of coffee or a pastry
- How
  - Increased availability and diversity of housing
  - Dynamic neighborhoods and corridors
  - Greater transportation flexibility and choice
  - Commercial opportunities and growth
  - Financial benefits to city and residents

BENEFITS

- University of Utah: Walkable neighborhoods contribute to 15% decrease in obesity and 20% decrease in diabetes
- Fiscally sound policy: more intensive land use contributes greater property taxes at same mill rates and land valuations for existing properties
- Increases development by relieving constrictions on development that contribute to high housing prices and depreciating housing stock
- Creates affordable, attainable, desirable housing at a range of income levels and in multiple areas of town
- Provides greater incentive for roads to be retrofitted for greater pedestrian and cyclist use as areas transform into mixed-uses

DOES IT WORK?

- U.S. Department of Transportation: "Homes in walkable and transit-accessible areas are extremely desirable, and insufficient supply generally leads to higher prices for these homes. Increasing the amount of development near transit **enables lower housing costs and makes more convenient transit service available for residents of all incomes.**"

FROM A CLIMATE STANDPOINT

- Urban Areas
  - Significant drops in energy consumption
    - 4,000 ppl/km2
    - 10,000 ppl/km2
    - 22,000 ppl/km2
  - DU/Acre:
    - 6
    - 16
    - 35 (FTA goal for TSD is 36 du/acre)
- Per Capita Energy Consumption:
  - U.S. Average: 279 Million BTUs
  - Alaska: 987 Million BTUs (3.5x the average)

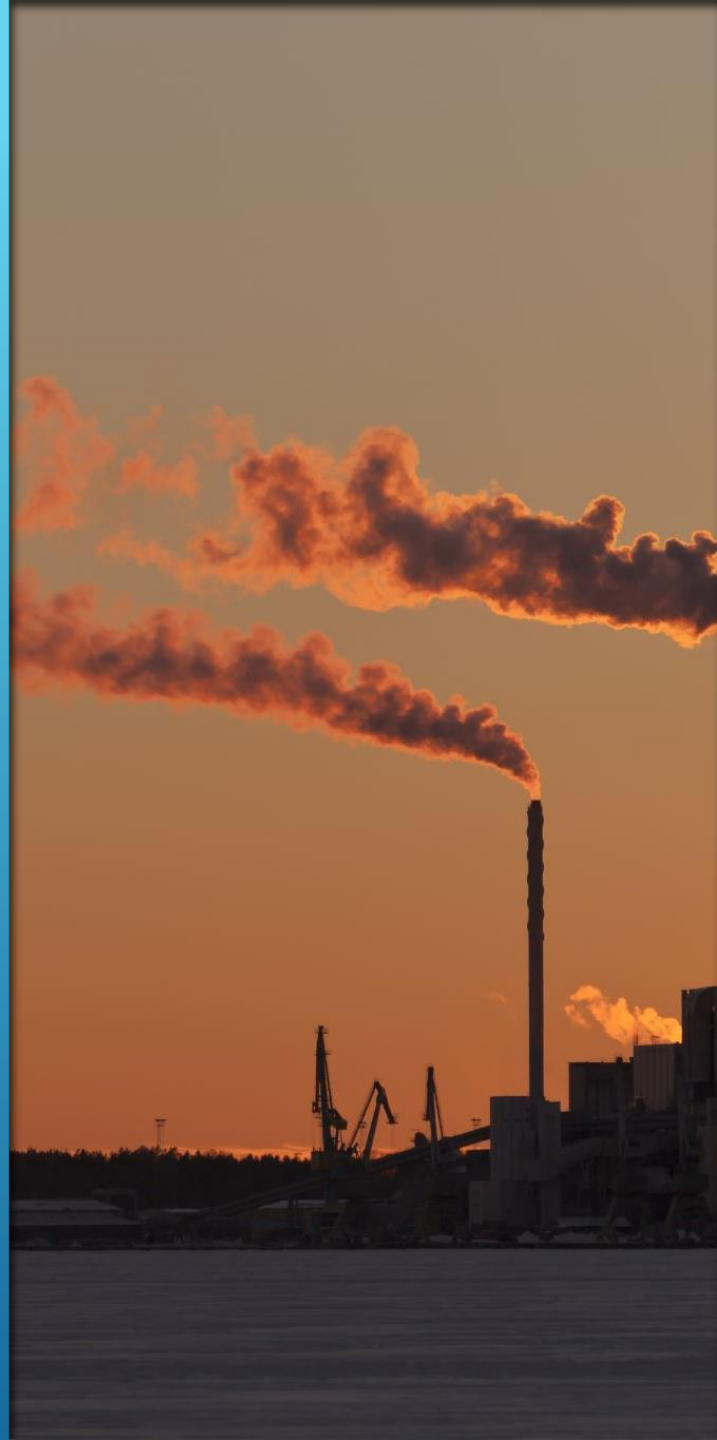

WHAT IS THE PATH FORWARD?

- Resolution in support of implementing Town Centers and Transit-Supportive Corridors from the 2040 LUP.
- Engage in the public process should an ordinance come forward.

BACKUP SLIDES

From:	Honest, Miranda L.
To:	zackary.gottshall@gmail.com; Girdwood Board of Supervisors; TACCpresident@proton.me
Cc:	Spano, Liza M.; Community Councils
Subject:	Notice of Deemed Complete Renewal Application of License 2025-2027
Date:	Tuesday, April 29, 2025 1:49:15 PM
Attachments:	2025-2027 The Frost Frontier #M10161 Renewal-TakuCampbell.pdf 2025-2027 The Herbal Cache #M19277 Renewal-GBOS.pdf 2025-2027 Alaska Rustic #M10239 Renewal-TurnagainArm.pdf

---

Dear Community Council:

This email is to notify you that the Clerk's Office has received and deemed complete the attached application(s) for the renewal of a municipal marijuana license within your boundary as required by Anchorage Municipal Code (AMC) 10.80.036C.

Currently, the application(s) are under review. The application(s) will be scheduled for final review by the Assembly at a regularly scheduled Assembly Meeting. You will be notified of the date and time, once scheduled.

The Community Council may send comments regarding the attached municipal marijuana license application to wwmas@muni.org or reply to this email. Please include the business name in the subject line.

If you have any concerns or issues with the above referenced establishment(s) we recommend contacting Municipal Code Enforcement and the State of Alaska Enforcement, and file a formal complaint, supplying detailed information regarding your concerns.

- *File a complaint with Municipal Code Enforcement – 343-4141 or online HERE.*
- *File a complaint with the State of Alaska Alcohol & Marijuana Enforcement – 269-0350 or email amco.enforcement@alaska.gov*

If you feel that there are criminal activities taking place, please contact Anchorage Police Department and give them information possible criminal activities associated with the premises.

File a complaint with Anchorage Police Department - file your report here

Thank you,
Mandy Honest
Business License Official

Municipality of Anchorage
Municipal Clerk's Office
907-343-4316

Messages to and from this email address may be available to the public under Alaska Public Records Law.

Renewal Application for Municipal Marijuana Establishment License

Municipality of Anchorage
Clerk's Office
PO Box 196650
Anchorage, AK 99519-6650

APPLICANT INFORMATION

Name of Authorized Applicant (see 3 AAC 306.020(d)) (last, first, MI): Carse, Brent

Home Physical Address: 317 Timberline dr	Contact Phone – Day: 907-764-7108 Contact Cell:
City, State, Zip Code: Girdwood, AK 99587	Business Mailing Address: PO Box 822
E-mail (required): Brent.Carse@gmail.com	City, State, Zip Code: Girdwood, AK 99587

MARIJUANA ESTABLISHMENT INFORMATION

Business Owner and Doing Business As Name: Brent Carse The Herbal Cache LLC

Municipal License Number: M 19277

- ☐ Cultivation Facility (including Limited Cultivation Facility)
- ☐ Manufacturing Facility (including Concentrate Manufacturing Facility)
- ☐ Testing Facility
- ☒ Retail Sales Establishment
  - ☐ On-Site Consumption Endorsement

PROPERTY INFORMATION

Site Street Address: 158 Holmgren Pl Girdwood, AK 99587

Any dwelling units on the property? ☐ Yes ☒ No | Any liquor licenses on the property? ☐ Yes ☒ No

APPLICATION REQUIREMENTS (Supporting documents must be submitted with renewal application.)

- ☒ Signed (original)
- ☒ List of all licensees and affiliates (3 AAC 306.020) with their home physical addresses (use additional sheet if necessary)
- ☒ Report any changes from last submitted application as required by AMC 10.80.036 (must also submit a change report/transfer application).

(Additional information may be required)

SWORN STATEMENT LISTING ALL CRIMINAL CHARGES ON WHICH THE LICENSEE(S) HAVE BEEN CONVICTED AND ANY CIVIL VIOLATION OF AS 04, AS 17.38, OR TITLE 10.80 IN THE CURRENT AND PREVIOUS CALENDAR YEARS AS REQUIRED BY AMC 10.80.036B.

I, the applicant, hereby swear that the following is a complete list of all such convictions for each proposed owner and manager of the marijuana establishment. None

(use additional sheet if necessary)

RECENT REGULATORY INFORMATION (Events that have occurred in the last 1 year for all or a portion of the site)

- ☐ Building or Land Use Permit:
- ☐ Land Use Enforcement Action:
- ☐ Nonconforming Determination requested for property?

ALL LICENSEES & AFFILIATES (3 AAC 306. 306.020, use additional sheet if necessary)

Current Licensees and Affiliates: Last, First, MI	Home Physical Address:
Carse Brent	317 Timberline dr, Girdwood, AK 99587

DC (initial) I hereby certify that I am owner of the property described above, or that I have permission from the owner to use the property described above, and that I am applying for a municipal license renewal in conformance with Title 10 and Title 21 of the Anchorage Municipal Code. My establishment will remain in conformance with municipal code at all times.

DC (initial) If I am applying for a license renewal for a marijuana cultivation facility, marijuana manufacturing facility, or marijuana retail sales establishment, I swear that neither I nor any proposed licensee (as defined in 3 AAC 306.020(b)(2)), agent, or employee of the proposed licensee, have any ownership or financial interest in any marijuana testing facility. If I am applying for a license renewal for a marijuana testing facility, I swear that neither I nor any proposed licensee, agent, or employee of the proposed licensee, have any ownership or financial interest in any marijuana cultivation facility, marijuana manufacturing facility, or marijuana retail sales establishment.

DC (initial) I hereby swear that no proposed licensee (as defined in 3 AAC 306.020(b)(2)) owes past-due taxes (property, business personal property, or other), fees (utility or other), or fines (traffic, library, trash, or other) to the municipality.

DC (initial) In accordance with AMC 10.80.056, I will immediately provide the Municipal Clerk with any communication from the state Marijuana Control Board disclosing the substance of information received by the Board as a result of a criminal history record check.

DC (initial) I acknowledge that the Assembly may deny my renewal application for a marijuana establishment license for any of the reasons listed in AMC 10.80.080.

DC (initial) In accordance with AMC 10.80.036B.b., I have read and am familiar with AS 17.38 and AMC 10.80 and will comply with all applicable requirements.

MODIFICATION INFORMATION (If applicable; if not applicable, select N/A.)

The licensed premises area is increasing by_____square feet.	☐ Yes	☒ N/A
A caretaker's unit is being added to the property.	☐ Yes	☒ N/A
My **retail store** is within 500 feet of a residential zoning district, and I am increasing my hours of operation from_____to _____.	☐ Yes	☒ N/A
My **retail store** is within 500 feet of a residential zoning district, and I am increasing the number of outdoor light fixtures.	☐ Yes	☒ N/A
In my **retail store**, I am increasing the retail sales area within the licensed premises area by _____square feet.	☐ Yes	☒ N/A
In my **cultivation establishment**, I am increasing my cultivation area within the licensed premises area by_square feet.	☐ Yes	☒ N/A
In my **manufacturing establishment**, I am adding a type of extraction process not previously approved for my facility.	☐ Yes	☒ N/A
My modification is not listed above and/or I have additional modifications to those checked above.	☐ Yes	☒ N/A
Please describe **all** the proposed modification(s) on a separate sheet, and attach any drawings or plans that show the proposed modifications.	☐ Yes	☒ N/A

I state, under penalty of perjury, that my name and signature or mark are shown on this application and that I am the individual making the foregoing application and authorized agent for this business **and affirm that the answers to the questions, the sworn statements regarding (1)** a person other than the proposed licensee(s) may not have a direct or indirect financial interest in the business being issued the license per AMC 10.80.015A **(2) listing all criminal convictions and (3) past due taxes, fines, and fees, and all other information contained in this application are true and complete to my knowledge.** WARNING: I understand that it is illegal to falsely sign or forge a signature. Falsely signing this declaration is an offense and may be prosecuted. It is a crime to submit a false written statement. AMC 8.30.170 - Unsworn falsification in the second degree. Unsworn falsification is a class A misdemeanor. AS 11.56.220, AS 11.56.235, AS 11.56.240

Signature of Applicant

4/28/25

Date

RETURN COMMENTS TO:

Municipality of Anchorage Planning Department
Current Planning Division
PO Box 196650
Anchorage, Alaska 99519-6650
Phone: 907-343-7943

CASE NO: 2025-0045

PLANNER: Daniel Mckenna-Foster

REQUEST: Review and Recommendation by Planning and Zoning Commission of an Ordinance of the Anchorage Municipal Assembly amending Anchorage Municipal Code Title 21 Chapters 1.03, 21.04, 21.05, 21.06, 21.07, 21.10, 21.11, 21.13, & 21.15 to allow more flexibility for small forms of housing and mobile dwelling units in manufactured home parks and the R-5 district.

COMMENTS AND MEETING SCHEDULE

Planning and Zoning Commission
Loussac Library Assembly Chambers
3600 Denali Street
Anchorage, Alaska

Hearing Date: Monday, June 09, 2025

Agency Comments Due: Monday, May 26, 2025

Council Comments Due: Friday, May 30, 2025

COMMUNITY COUNCIL(S):
Abbott Loop, Airport Heights, Basher, Bayshore-Klatt, Bear Valley, Birchwood, Chugiak, CBERRRSA Board of Supervisors, CERAB, Campbell Park, Downtown, Eagle River, Eagle River Valley, Eklutna Valley, Fairview, Girdwood Board of Supervisors, Glen Alps, Government Hill, Midtown, JBER, Hillside, Huffman OMalley, Mountain View, North Star, Northeast, Old Seward-Oceanview, Portage Valley, Rabbit Creek, Rogers Park, Russian Jack, Sand Lake, Scenic Foothills, South Addition, South Fork, Spenard, Taku Campbell, Tudor Area, Turnagain, Turnagain Arm, and University Area

Municipality of Anchorage

Planning Department

Memorandum

Date: May 2, 2025

To: Reviewing Agencies

Subject: PZC Case 2025-0045, Manufactured Home Parks and Mobile Dwelling Units

The Planning Department is seeking comments on the attached draft ordinance, which will update the definitions of mobile homes, manufactured homes, and manufactured housing communities. The proposal would also allow more flexibility in siting small and moveable forms of housing.

This change will help implement one of the goals of the Mayor's 10,000 Homes in 10 Years Strategy: "*Legalize smaller, cheaper, and innovative housing types like manufactured, mobile, modular, and even 3D-printed homes.*" Attached is information on issues being addressed, policy support, proposed solutions, and other items to consider.

Staff welcomes any comments on this ordinance, and depending on the volume of feedback received, may provide an amended draft for review by the Planning and Zoning Commission.

Your comments will be submitted to the Planning and Zoning Commission for a public hearing scheduled for **Monday, June 9 2025, at 6:30 p.m. in the Assembly Chambers of the Z.J. Loussac Library, 3600 Denali Street, Anchorage**. Recommendations from the Commission will be forwarded to the Assembly.

Submit written comments in the following ways:

by CityView:	http://munimaps.muni.org/planning/allcomments.cfm **(insert case number *2025-0045*)**
by email:	Anchorage2040@muni.org
by fax:	(907) 343-7927
by mail:	Current Planning Division MOA Planning Department P.O. Box 196650 Anchorage, AK 99519-6650

If you have questions, please contact Daniel Mckenna-Foster at 907-343-7918 in the Planning Department.

Attachmemts Ordinance Information Sheet
Draft Ordinance

Submitted by: Chair of the Assembly at the Request of the Mayor
Prepared by: Planning Department
For reading: _____

ANCHORAGE, ALASKA
AO No. 2025-_____

AN ORDINANCE AMENDING AMC 21.03, 21.04, 21.05, 21.06, 21.07, 21.10, 21.11, 21.13 and 21.15 TO ALLOW MORE FLEXIBILITY FOR SMALL FORMS OF HOUSING AND MOBILE DWELLING UNITS IN MANUFACTURED HOME PARKS AND THE R-5 DISTRICT.

(Planning and Zoning Commission Case 2025-0045)

WHEREAS, the Assembly commissioned a study on the feasibility of new manufactured home communities, which indicated that this type of development is no longer an affordable option; and

WHEREAS, the study noted that no new manufactured home communities have been built in Anchorage since 1990, and the development of individual manufactured houses, such as for use on individual lots, has decreased from over 128 per year in 2014 to just three in 2023; and

WHEREAS, the study also stated that zoning restrictions play a significant role in the decline of MHC development; and

WHEREAS, Policy #59 of the 2020 Comprehensive Plan calls for the Municipality to recognize mobile home parks, co-ops, and common ownership interests as viable, affordable housing choices and neighborhood lifestyle options; and

WHEREAS, Action 4-12 of the 2040 Land Use Plan calls for the Municipality to work jointly with the manufactured housing industry/community and affordable housing advocates to develop an affordable housing redevelopment displacement mitigation strategy; and

WHEREAS, allowing more flexibility with how land can be used within existing manufactured housing communities but maintaining the protections of the building code can both allow people to improve their living conditions and also provide more options for current residents; now, therefore,

THE ANCHORAGE ASSEMBLY ORDAINS:

Section 1. Anchorage Municipal Code 21.03.115, Review and Approval Procedures, Small Area Implementation Plan, is hereby amended to read as follows (*the remainder of the section is not affected and therefore not set out)*:

21.03.115 SMALL AREA IMPLEMENTATION PLAN

*** *** ***

G. Compliance with Small Area Implementation Plan.

Draft

2. The provision in G.1. shall not apply to the following use categories and types when conditional use approval is required in the applicable Title 21 tables of allowed uses:

a. Manufactured home communities;

*** *** ***

(AO 2021-46(S), 6-8-21; AO 2024-24, 4-23-24)

Section 2. Anchorage Municipal Code 21.04.020, Zoning Districts, Residential Districts, is hereby amended to read as follows (*the remainder of the section is not affected and therefore not set out)*:

21.04.020 RESIDENTIAL DISTRICTS

*** *** ***

K. R-5: Low-Density Residential District

1. Purpose. The R-5 district is intended primarily for single- and two-family residential areas with gross densities up to five dwelling units per acre. Mobile dwelling units[HOMES] on individual lots are allowed in this district.

*** *** ***

(AO 2012-124(S), 2-26-13; AO 2014-132, 11-5-14; AO 2015-100, 10-13-15; AO 2017-176, 1-9-18; AO 2019-58, 5-7-19; AO 2022-36, 4-26-22; AO 2023-77, 7-25-23; AO 2023-42, 8-22-23; AO 2023-50, 7- 11-23; AO 2023-103(S), 12-18-23)

Section 3. Anchorage Municipal Code 21.05.010, Use Regulations, Table of Allowed Uses, is hereby amended to read as follows (*the remainder of the section is not affected and therefore not set out)*:

21.05.010 TABLE OF ALLOWED USES

*** *** ***

E. Table of Allowed Uses - Residential, Commercial, Industrial, and Other Districts.

Draft

TABLE 21.05-1: TABLE OF ALLOWED USES – RESIDENTIAL, COMMERCIAL, INDUSTRIAL, AND OTHER DISTRICTS
P = Permitted Use S = Administrative Site Plan Review C = Conditional Use M = Major Site Plan Review T = Special Land Use Permit for Marijuana
For uses allowed in the A, TA, and TR districts, see section 21.04.060.
All other uses not shown are prohibited.

	RESIDENTIAL																	COMMERCIAL					INDUST.			OTHER					
Use Category	Use Type	R-1	R-1A	R-2A	R-2D	R-2M	R-3	R-3A	R-4	R-4A	R-5	R-6	R-7	R-8	R-9	R-10	B-1A	B-1B	B-3	RO	MC	I-1	I-2[1]	MI	AF	DR	PR	PLI	W	Definitions and Use-Specific Standards
RESIDENTIAL USES																															
	*** *** ***																														
Household Living	Dwelling, mobile dwelling unit[HOME]										P																				21.05.030A.7.
	Mobile Dwelling Unit [MANUFACTURED HOME] community					C	C		C	C	C																				21.05.030A.8.
	*** *** ***																														

(AO 2012-124(S), 2-26-13; AO 2013-117, 12-3-13; AO 2013-139, 01-28-14; AO 2014-58, 5-20-14; 2015-133(S), 2-23-16; AO 2015-142(S-1), 6-21-16; AO 2016-3(S), 2-23-16; AO 2016-131, 11-15-16; AO 2016-136, 11-15-16; AO 2016-156, 12-20-16; AO 2017-10, 1-24-17; AO 2017-57, 4-11-17; AO 2017-74, 5-23-17; AO 2017-176, 1-9-18; AO 2017-175(S), 2-13-18; AO 2020-38, 4-28-20; AO 2020-56, 6-23-20; AO 2021-54, 6-22-21; AO 2023-77, 7-25-23; AO 2023-42, 8-22-23; AO 2023-87(S-1), 6-25-24)

Section 4. Anchorage Municipal Code 21.05.030, Use Regulations, Residential Uses: Definitions and Use-Specific Standards, is hereby amended to read as follows (*the remainder of the section is not affected and therefore not set out)*:

21.05.030 RESIDENTIAL USES: DEFINITIONS AND USE-SPECIFIC STANDARDS

*** *** ***

A. Household Living

*** *** ***

7. Mobile Dwelling[, MOBILE HOME] Unit

a. Definition

A small form of transportable housing that can be certified as safe for habitation by the MOA Building Official. This includes dwellings that meet federal requirements for manufactured housing[TRANSPORTABLE, FACTORY-BUILT DWELLING UNIT DESIGNED AND INTENDED TO BE

USED AS A YEAR-ROUND DWELLING, AND BUILT PRIOR TO THE ENACTMENT OF THE FEDERAL MANUFACTURED HOME CONSTRUCTION AND SAFETY STANDARDS ACT OF 1976].

b. Use-Specific Standard

Only one mobile dwelling unit[HOME] is allowed per lot in the R-5 district, unless the lot is within a mobile dwelling unit[MANUFACTURED HOME] community. A mobile dwelling unit[HOME] shall be placed on a permanent foundation unless it is an accessory dwelling unit or located within a mobile dwelling unit[MANUFACTURED HOME] community.

8. Mobile Dwelling Unit[MANUFACTURED HOME] Community (MDU[H]C)

a. Definition

Any parcel or adjacent parcels of land in the same ownership that are utilized for occupancy by more than two mobile dwelling units[HOMES, OR MANUFACTURED HOMES]. This term shall not be construed to mean tourist facilities for parking of travel trailers or campers, which are classified under “camper park.”

b. Use-Specific Standards

*** *** ***

v. Impermanent Foundations

No mobile dwelling units[HOMES AND MANUFACTURED HOMES] within an MDU[H]C shall be placed on a permanent foundation.

vi. Mobile Dwelling Unit[HOME OR MANUFACTURED HOME] Spaces

(A) Occupancy

No mobile home or manufactured home space shall contain more than one manufactured home, mobile home, [OR]duplex mobile home or manufactured home, or any other type of small dwelling that can be certified as safe for habitation by the building code or another accepted code[NO OTHER DWELLING UNIT SHALL OCCUPY A MOBILE HOME OR MANUFACTURED HOME SPACE].

Draft

(B) Minimum Size

In manufactured home communities created after January 1, 2014, all single mobile home or manufactured home spaces shall have a minimum of 1,750[3,500] square feet of land area and all duplex mobile home or manufactured home space shall have a minimum of 2,500[5,000] square feet of land area.

(C) Mobile Dwelling Unit[HOME OR MANUFACTURED HOME] Separation

(1) No part of any mobile dwelling unit[MOBILE HOME, MANUFACTURED HOME], accessory building, or its addition shall be placed closer than 15 feet from any other mobile home, manufactured home, or its addition, or no closer than ten feet if that mobile home, manufactured home, accessory building, or its addition being placed meets building code, NFPA (National Fire Protection Act) 501A and HUD #24 CFR 328O standards.

(2) The requirements of sections 21.06.030C.2., Projections into Required Setbacks, and 21.05.070, Accessory Uses and Structures, shall not apply to MDU[H]Cs. All mobile dwelling units[HOMES, MANUFACTURED HOMES], and accessory structures shall be placed at least five feet from the front space line. Steps shall not be considered in determining the separations required by this subsection.

(D) Access

Each mobile dwelling unit[HOME OR MANUFACTURED HOME] space shall have direct success to an internal street. Direct access to exterior public streets is prohibited.

Draft

vii. Streets and Drainage Facilities
All streets within an MDU[H]C shall comply with the following standards:
*** *** ***

viii. Water and Sewage Systems
All mobile dwelling units[HOMES] in MDU[H]Cs shall be connected to water and sewage systems approved by the appropriate governmental body before they may be occupied.

ix. Landscaping
*** *** ***

(B) All areas not devoted to mobile dwelling unit[HOME OR MANUFACTURED HOME] spaces, structures, drives, walks, off-street parking facilities, or other required landscaping shall be planted with site enhancement landscaping.

x. Additions to mobile dwelling units[HOMES OR MANUFACTURED HOMES]; Accessory Buildings

(A) Generally
All additions and accessory buildings shall be subject to the spacing and setback requirements for mobile dwelling units[HOMES AND MANUFACTURED HOMES]. Any addition or accessory building shall be constructed in accordance with building safety code regulations pertaining to temporary structures, provided that additions will not be required to have a permanent foundation.

(B) Height
The height of accessory buildings is limited to that of the underlying zoning district. In the case of districts where the height is unrestricted, the maximum height of accessory structures shall be 12 feet. The height of additions to mobile dwelling units [MOBILE HOMES OR MANUFACTURED HOMES] is limited to that of the underlying zoning district. The

Draft

use of any area created above the original roof line of the mobile home or manufactured home as living space is prohibited.

(C) Exits

The number of exterior exits from additions shall be equal to or greater than the number of exits leading from the mobile dwelling unit[HOME OR MANUFACTURED HOME]to the addition. When two exterior exits are required from additions, they shall be placed a distance apart equal to one-fifth of the total perimeter of the addition.

*** *** ***

xiii. Campers and Travel Trailers Occupied campers and travel trailers are not subject to paragraphs 8.b.vi., Mobile Home or Manufactured Home Spaces, and 8.b.viii., Water and Sewage Systems, of this subsection. Any permitted spaces intended for occupied campers and travel trailers shall be placed in an area segregated from permanent mobile home or manufactured home spaces. Any area within a MDU[H]C that is occupied by campers and travel trailers shall be Chapter 21.05: Use Regulations Sec. Residential Uses: Definitions and Use-Specific Standards Title 21: Land Use Planning February 11, 2025 Anchorage, Alaska Page 5-26 served by a service building containing public toilet facilities and water supply

*** *** ***

xv. Convenience Establishments in MDU[H]Cs Convenience establishments of a commercial nature, including stores, coin-operated laundry, beauty shops and barbershops, may be permitted in MDU[H]Cs subject to the following restrictions. Such establishments and the parking lot primarily related to their operations shall not occupy more than ten percent of the area of the community, shall be subordinate to the residential use and character of the park, shall be located, designed and intended to serve frequent trade or service needs of persons residing in the community, and shall present no visible evidence of their commercial character from any portion of any district outside the community. Such convenience

Draft

areas shall be considered accessory uses to the principal use of mobile dwelling units [MOBILE HOMES OR MANUFACTURED HOMES], may be permitted without a zoning change, and shall be discontinued if the MDU[H]C is discontinued.

xvi. Sites in Flood Hazard Area The following requirements shall apply to all MDU[H]Cs, any portion of which are within a flood hazard area:

(A) Over-the-top ties shall be provided at each of the four corners of the mobile home or manufactured home and two ties per side at intermediate locations. Mobile dwelling units [HOMES] more than 50 feet long shall require one additional tie per side.

(B) Frame ties shall be provided at each corner of the frame, and five ties per side at intermediate points. Mobile dwelling units[HOMES OR MANUFACTURED HOMES] more than 50 feet long shall require four additional ties per side.

(C) All components of the anchorage system shall be capable of carrying a force of 4,800 pounds.

(D) Any additions to the mobile home or manufactured home shall be similarly anchored. (E) All applications for a conditional use for an MDU[H]C shall include an evacuation plan indicating alternate vehicular access and escape routes during times of flooding.

xvii. Sites in Floodplain No mobile dwelling units [MOBILE HOMES OR MANUFACTURED HOMES] shall be placed within the regulatory floodplain, except that MDU[H]Cs existing before September 25, 1979, shall be permitted to place mobile dwelling units[HOMES OR MANUFACTURED HOMES] within existing unit spaces.

xviii. Nonconforming MDU[H]Cs

Draft

(A) Those MDU[H]Cs situated within the boundaries of the former City of Anchorage which existed prior to August 30, 1977, are not subject to paragraphs 8.b.vi., Mobile dwelling unit[HOME OR MANUFACTURED HOME] Spaces, and 8.b.vii., Streets . Drainage Facilities, of this subsection, provided that such communities meet the standards set forth in the former City of Anchorage Municipal Code sections 6.60.010 through 6.60.110.

(B) Those MDU[H]Cs situated in any area of the municipality other than that described in paragraph i. above, which existed prior to 1966, are not subject to the requirements of paragraphs 8.b.vi., Mobile dwelling unit [MOBILE HOME OR MANUFACTURED HOME] Spaces, 8.b.vii., Streets and Drainage Facilities, and 8.b.x., Additions to Mobile Dwelling Units[HOMES OR MANUFACTURED HOMES]; Accessory Buildings, of this subsection, within the area and to the extent that it was constructed, operated or maintained prior to that date.

(C) Any MDU[H]C exempt from certain requirements of this subsection 21.05.030A.8., Mobile Dwelling Unit [MANUFACTURED HOME COMMUNITY], as provided in paragraphs xviii.(A) and (B) above, shall conform to all provisions of this subsection 21.05.030A.8. within any area first constructed, operated, or maintained after the specified date or within any area that is substantially altered, remodeled, reconstructed, or rebuilt after that date.

*** *** ***

(AO 2012-124(S), 2-26-13; AO 2013-117, 12-3-13; AO 2014-58, 5-20-14; AO 2015-133(S), 2-23-16; AO 2017-160, 12-19-17; AO 2023-103(S), 12-18-23; AO 2023-87(S-1), 6-25-24

Section 5. Anchorage Municipal Code 21.05.050, Use Regulations, Commercial Uses: Definitions and Use-Specific Standards, is hereby amended to read as follows (*the remainder of the section is not affected and therefore not set out)*:

Draft

21.05.050 COMMERCIAL USES: DEFINITIONS AND USE-SPECIFIC STANDARDS

*** *** ***

I. Vehicles and Equipment

*** *** ***

5. Vehicle-Large, Sales and Rental

a. Definition

An establishment engaged in the display, sale, leasing, or rental of new or used motor vehicles, and boats less than 30 feet in length and/or less than 12,000 lbs. Vehicles include, but are not limited to, automobiles, light trucks, vans, trailers, recreational vehicles, and mobile dwelling units[HOMES].

*** *** ***

(AO 2012-124(S), 2-26-13; AO 2013-117, 12-3-13; AO 2014-133, 11-5-14; AO 2015-82, 7-28-15; AO 2023- 77, 7-25-2023; AO 2024-24, 4-23-24; AO 2025-3, 2-11-25)

Section 6. Anchorage Municipal Code 21.05.070, Use Regulations, Accessory Uses and Structures, is hereby amended to read as follows (*the remainder of the section is not affected and therefore not set out)*:

21.05.070 ACCESSORY USES AND STRUCTURES

*** *** ***

C. Table of Accessory Uses

*** *** ***

TABLE 21.05-3: TABLE OF ACCESSORY USES – RESIDENTIAL, COMMERCIAL, INDUSTRIAL, AND OTHER DISTRICTS

P = Permitted S = Administrative Site Plan Review C = Conditional Use Review

	RESIDENTIAL															COMMERCIAL					INDUST.			OTHER					
Accessory Uses	**R-1**	**R-1A**	**R-2A**	**R-2D**	**R-2M**	**R-3**	**R-3A**	**R-4**	**R-4A**	**R-5**	**R-6**	**R-7**	**R-8**	**R-9**	**R-10**	**B-1A**	**B-1B**	**B-3**	**RO**	**MC**	**I-1**	**I-2**	**MI**	**AF**	**DR**	**PR**	**PLI**	**W**	**Definitions and Use-**
*** *** ***																													
Intermodal shipping container (other than for residential use)	P	P	P	P	P	P	P	P	P	P	P	P	P	P	P	P	P	P	P	P	P	P	P	P	P	P	P	P	21.05.070D.12.
*** *** ***																													

*** *** ***

D. Definitions and Use-Specific Standards for Allowed Accessory Uses and Structures

*** *** ***

3. Bed and Breakfast

a. Definition

*** *** ***

b. Use-Specific Standards

i. General Standards

(A) Bed and breakfast establishments are allowed only in attached or detached single-family and two-family dwellings, not including mobile dwelling units[HOMES].

*** *** ***

12. Intermodal Shipping Container (Connex Unit) as Storage

*** *** ***

b. Use-Specific Standards

Except when used as dwelling unit, t[T]he use of a connex unit is allowed in all zoning districts subject to the following:

*** *** ***

iii. In residential districts, connex units used for non-residential use are only permitted on lots equal to or greater than 40,000 square feet. Except as restricted in b.vii. below, connex units existing as of January 1, 2014 on any size lot may continue as long as the screening requirements of b.i. above and the number limitations of b.iv. below are met within one year of January 1, 2014, in which case such connex unit(s) shall be deemed conforming. Failure to comply with this provision shall not result in a legal nonconformity, but rather shall result in an illegal structure.

*** *** ***

E. Prohibited Accessory Uses and Structures

*** *** ***

4. Use of Mobile dwelling unit[HOME], Recreational Vehicle, or Travel Trailer as Residence

Mobile dwelling units may be used as an accessory dwelling unit to a permanent or temporary residence. Except as allowed by 21.05.080B.3.d., in all zoning districts, [MOBILE HOMES,] recreational vehicles[,] and travel trailers may not be used as an accessory use for a permanent or temporary residence. However, an RV or travel trailer may be used as visitor accommodation for not more than 90 days in any calendar year.

(AO 2012-124(S), 2-26-13; AO 2013-117, 12-3-13; AO 2015-131, 1-12-15; AO2015-142(S-1), 6-21-16; AO 2016-3(S), 2-23-16; AO 2016-136, 11-15-16; AO 2017-10, 1-24-17; AO 2017-160, 12-19-17; AO 2017-176, 1-9-18, AO 2018-43(S); 6-12-18;

Draft

AO 2020-38, 4-28-20; AO 2021-26, 3-9-21; AO 2021-89(S), 2-15-22; AO 2022-107, 2-7-23; AO 2023-77, 7-25-23; AO 2024-24, 4-22-2024)

Section 7. Anchorage Municipal Code 21.05.080, Use Regulations, Temporary Uses and Structures, is hereby amended to read as follows (*the remainder of the section is not affected and therefore not set out)*:

21.05.080 TEMPORARY USES AND STRUCTURES

*** *** ***

B. General Temporary Use Standards

*** *** ***

3. Other Uses and Structures Allowed

The following temporary uses and structures shall be allowed in any zoning district or as specified below, in accordance with the standards of this section.

*** *** ***

d. Temporary Living in a Mobile Home, Motor Home, or Other Recreational Vehicle

Notwithstanding title 23, one mobile dwelling unit [HOME], motor home, or other recreational vehicle with a fully operable self-contained sanitation system may be used on a lot in the R-5, R-6, R-7, R-8, R-9, R-10, and TA districts as temporary living quarters for not more than 18 months while a permanent dwelling is being constructed or repaired, if the following requirements are met:

*** *** ***

(AO 2012-124(S), 2-26-13; AO 2013-117, 12-3-13; AO 2024-24, 4-23-24)

Section 8. Anchorage Municipal Code 21.06.020, Dimensional Standards, Dimensional Standards Trables, is hereby amended to read as follows (*the remainder of the section is not affected and therefore not set out)*:

21.06.020 DIMENSIONAL STANDARDS TABLES

A. Table of Dimensional Standards: Residential Districts

Draft

TABLE 21.06-1: TABLE OF DIMENSIONAL STANDARDS - RESIDENTIAL DISTRICTS *(Additional standards may apply. See district-specific standards in chapter 21.04 and use-specific standards in chapter 21.05.)*								
Use	Minimum lot dimensions[1]		Max lot coverage (%)[7]	Minimum Setback Requirements (ft)			Max number of principal structures per lot or tract [2]	Maximum height of structures (ft)
	Area (sq ft)	Width (ft)		Front	Side	Rear		
*** *** ***								
R-5: Low-Density Residential District								
Dwelling, single-family, or one mobile dwelling unit[HOME]	7,000	50	30	20	5	10	1	Principal: 30 Accessory garages/ carports: 25 Other accessory: 12
*** *** ***								

(AO 2012-124(S), 2-26-13; AO 2013-117, 12-3-13; AO 2015-100, 10-13-15; AO 2016-71, 6-21-16; AO 2017-160, 12-19-17; AO 2017-176, 1-9-18; AO 2018-43(S), 6-12-18; AO 2019-11, 2-12-19; AO 2018-58, 5-7-19; AO 2020-38, 5-28-20; AO 2022-36, 4-26-22; AO 2023-77, 7-25-23; AO 2023-42, 8-22-23; AO 2023-103(S), 12-18-23; AO 2023-87(S-1), 6-25-24)

Section 9. Anchorage Municipal Code 21.07.020, Development and Design Standards, Natural Resource Protection, is hereby amended to read as follows (*the remainder of the section is not affected and therefore not set out)*:

21.07.020 NATURAL RESOURCE PROTECTION

*** *** ***

E. Flood Hazard Area Regulations

*** *** ***

5. Regulations Applicable to Flood Hazard Area

*** *** ***

c. Standards for Issuance of Building or Land Use Permit
No building permits, encroachment permits, manufactured home permits mobile dwelling unit permits, or other land use permits shall be issued for any development activity within the flood hazard area unless the plans show that, in addition to compliance with all other ordinances, regulations and permit requirements, the development shall meet the following requirements:

*** *** ***

7. Construction Requirements

a. Generally
All new construction and substantial improvements in areas designated on the flood insurance rate map as zones A, A1-30, AE, and AH shall meet the following conditions:

*** *** ***

Draft

v. For new mobile dwelling[MANUFACTURED HOME] parks and manufactured home subdivisions; for expansions to existing mobile dwelling unit[MANUFACTURED HOME] parks and manufactured home subdivisions; for existing manufactured home parks and manufactured home subdivisions where the repair, reconstruction or improvement of the streets, utilities and pads equals or exceeds 50 percent of value of the streets, utilities and pads before the repair, reconstruction or improvement has commenced; and for mobile dwelling units[MANUFACTURED HOMES] not placed in a manufactured home park or manufactured home subdivision, require that the repair, and on all property not within a mobile dwelling unit[MANUFACTURED HOME] park or subdivision stands or lots are elevated on compacted fill or on pilings so that:

(A) The lowest floor of each mobile dwelling unit or manufactured home must be at least one foot above the base flood level.

(B) Adequate surface drainage and access for a hauler must be provided.

(C) For mobile dwelling units or manufactured homes placed on pilings, pilings must be stable and no more than ten feet apart and reinforced if more than six feet above the ground level.

(D) Lots must be large enough to permit steps.

vi. All mobile dwelling units or manufactured homes to be placed or substantially improved shall be elevated on a permanent foundation such that the lowest floor of the manufactured home is at least one foot above the base flood elevation, and be securely anchored to an adequately anchored foundation system.

vii. All mobile dwelling units or manufactured homes must likewise be anchored to prevent flotation, collapse or lateral movement, and shall be installed using methods and practices that minimize flood damage. Anchoring methods may

Draft

include but are not limited to use of over-the-top or frame ties to ground anchors.

*** *** ***

(AO 2012-124(S), 2-26-13; AO 2013-117, 12-3-13; AO 2016-34(S), 4-12-16; AO 2017-11, 2-14-17; AO 2018-67(S-1), 10-9-18; AO 2023-77, 7-25-23)

Section 10. Anchorage Municipal Code 21.10.020, Chugiak-Eagle River, Application of Chapter 21.10, is hereby amended to read as follows (*the remainder of the section is not affected and therefore not set out)*:

21.10.020 APPLICATION OF CHAPTER 21.10

*** *** ***

F. Definitions

1. When the terms "Mobile Home" or "Manufactured Home" exist in this chapter 21.10, they shall be considered the same as Mobile Dwelling Units in the other chapters of Title 21.

(AO 2012-124(S), 2-26-13; AO 2013-117, 12-3-13; AO 2020-38, 4-28-20)

Section 11. Anchorage Municipal Code 21.11.050, Downtown, Use Regulations, is hereby amended to read as follows (*the remainder of the section is not affected and therefore not set out)*:

*** *** ***

21.11.050. USE REGULATIONS

*** *** ***

A. Table of Allowed Uses

TABLE 21.11-2: TABLE OF ALLOWED USES – DOWNTOWN DISTRICTS

P = Permitted Use L = Permitted with Limitations S = Administrative Site Plan Review
C = Conditional Use M = Major Site Plan Review T = Special Land Use Permit for Marijuana
A blank cell means the use is prohibited.

Use Type	B-2A	B-2B	B-2C	Definitions and Use-Specific Standards
RESIDENTIAL USES				
*** *** ***				
Mobile dwelling[,] unit[MOBILE HOME]				21.05.030A.7.
Mobile dwelling unit [MANUFACTURED HOME]community				21.05.030A.8.
*** *** ***				

(AO 2020-38, 4-28-20; AO 2023-43, 4-25-23: AO 2023-77, 7-25-23; AO 2023-120, 12-5-23)

Section 12. Anchorage Municipal Code 21.13.020, Nonconformities, Single- and Two-Family Structures and Mobile Homes, is hereby amended to read as follows (*the remainder of the section is not affected and therefore not set out)*:

21.13.020 SINGLE- AND TWO-FAMILY STRUCTURES AND MOBILE DWELLING UNITS[HOMES]

*** *** ***

B. Mobile Dwelling Units[HOMES]

1. Lawfully erected nonconforming mobile dwelling units[HOMES] may be repaired or replaced, as long as the nonconformity is not increased.

2. Lawfully erected nonconforming mobile dwelling units[HOMES] on individual lots may be moved within the lot in compliance with setback regulations.

3. Mobile dwelling units[HOMES] in nonconforming manufactured home communities may be repaired or replaced, in compliance with setback regulations.

(AO 2012-124(S), 2-26-13)

Section 13. Anchorage Municipal Code 21.15.040, Rules of Construction and Definitions, Residential Uses: Definitions and Use-Specific Standards, is hereby amended to read as follows (*the remainder of the section is not affected and therefore not set out)*:

21.15.040 RESIDENTIAL USES: DEFINITIONS AND USE-SPECIFIC STANDARDS

*** *** ***

Mixed-Use Development

*** *** ***

Mobile Dwelling Unit

Any manufactured home, mobile home, tiny home, or other type of small dwelling that can be moved and certified as safe for permanent occupancy by either HUD or the Building Official.

Modify Fuels

*** *** ***

(AO 2012-124(S), 2-26-13; AO 2013-117, 12-3-13; AO 2014-132, 11-5-14; AO 2015-82, 7-28-15; AO 2015-100, 10-13-15; AO 2015-138, 1-12-16; AO 2015-133(S), 2-23-16; AO 2015-142(S-1), 6-21-16; AO 2016-3(S), 2-23-16; AO 2016-144(S), 12-20-16; AO 2017-55, 4-11-17; AO 2017-75, 5-9-2017; AO 2018- 12, 2-27-18; AO 2018-67(S-1), 10-9-18; AO 2018-92, 10-23-18; AO 2019-132, 12-2-19; AO 2020-38, 4- 28-20; AO 2021-89(S), 2-15-22; AO 2022-36, 4-26-22; AO 2022-80(S), 11-22-22; AO 2023-120, 12-5-23)

Draft

Section 14. This ordinance shall be effective immediately upon passage and approval by the Assembly.

PASSED AND APPROVED by the Anchorage Assembly this _____ day of _____, 2025.

_____
Chair of the Assembly

ATTEST:

_____
Municipal Clerk

(Planning and Zoning Commission Case No. 2025-0045)

Draft