Roger Hickel
Contracting, Inc.

July 26th, 2022

Municipality of Anchorage
3640 E. Tudor Rd
Anchorage, AK 99507
Attention: Saxton Shearer

Re: Navigation CMAR
Project #: 457

Subject: Long Lead Plumbing Items (WP #5)R1

Dear Mr. Shearer,

In accordance with our recent conversation regarding the procurement of long lead plumbing fixtures, we have prepared the attached quote.

We understand the work to entail providing material as described in the attached quotes will be ordered and the shop drawing/submittal process for such will begin immediately so as to receive long lead items yet this fall.

We propose to provide this work for the lump price of $169,232.27. Please see the attached quotes and breakdown as to how this estimate was developed. Upon reviewing, please do advise if work beyond that which is scoped is necessary or desired, we would be happy to modify our pricing accordingly.

Please do not hesitate to contact me should you have any questions or concerns regarding this proposal. Thank you for this opportunity to be of service.

Sincerely,

Scott Dunlap

Scott Dunlap, Vice President
Roger Hickel Contracting, Inc

Accepted: Saxton Shearer
Owner's Representative

Date: 7-26-22

Navigation CMAR- WP #5.

11001 Calaska Circle • Anchorage, Alaska • 99515 • phone 907-279-1400 • fax 907-279-1405

Roger Hickel Contracting, Inc.

Date: 7/26/2022
WP # 5

Project: **Navigation Center CMAR**

Description: Long Lead Plumbing Fixtures

	ICOR#	na
General Contractors Work		
Regular Labor		$0.00
Materials		$158,386.00
Equipment		$0.00
Subtotal		$158,386.00
Subcontractors		
Subcontractor work		$0.00
Subcontractor equipment		$0.00
2nd Tier Subcontractor		$0.00
3rd Tier Subcontractor		$0.00
Total Subcontractor	0%	$0.00
SUMMARY		
Prime Contractors Regular Labor		$0
Prime Contractors Materials		$158,386
Leased Equipment		$0
Total Self-Performed Work		$158,386
Subcontractor Subtotal		$0
Total Cost of work (Self Performed and Subcontracted)		$158,386
General Liability Insurance (.85%)		$1,346
P/P Bond (.91%)		$1,441
Total Task Cost		$161,174
CMAR Fee	5%	$8,058.68
Total Change order amount		$169,232.27

Submitted by: Scott Dunlap

7/20/2022
Date

7/26/2022

Project: Navigation Center

WP #: 5

Description: Procure Long Lead Plumbing Fixtures

Roger Hickel Contracting, Inc.

SPEC SECT	ACTIVITY	QTY	Unit	Labor MH	Labor $	Total MH's		TOTAL LABOR $	Material Rate	TOTAL MATL $	TOTAL EQUIP $	SUB $	Line Totals
	Long Lead Plumbing Fixtures (AMI Quote)	1	LS		87	0	87	0	158,386	158,386	0	0	158,386
					87	0	87	0		0	0	0	0
		SECTION TOTALS				0		-		158386.00	0	0	158,386

Total MH 0

Total Labor $ 0

Total Matl $ 158,386

Total Equip $ 0

0

Total $ 158,386

ALASKA MECHANICAL INCORPORATED

8540 Dimond D Circle
Anchorage, AK 99515

(907) 349-8502
Fax (907) 349-1324

July 26, 2022

To: Roger Hickel Contracting

Subject: Mechanical Proposal **Rev. 7**

Reference: Navigation Center 65%
Anchorage, Alaska

Alaska Mechanical, Inc. proposes to furnish the following as called out on the mechanical drawings.

- **Alternate Penal Fixture Material Procurement** **$ 158,386**

The following statements, assumptions, inclusions and exclusions define our scope of work and are part of our proposal.

Inclusions:
1. Submittals and Product Data
2. Purchase of Long Lead Equipment upon Approved Submittals (Attached)

Exclusions:
1. All Warranties if Equipment not installed by AMI

Lead Times:

ALTERNATE Willoughby Penal Water Closets and Sinks P-1, P-1A, P-2	14-16 Weeks to Anchorage
ALTERNATE Willoughby Penal Showers P-3, P-3A	14-16 Weeks to Anchorage

If you have any questions, please feel free to call.

This proposal is based on signing a contract with a mutually acceptable schedule and conditions as set forth in AIA Form A401 "Subcontract" or other mutually acceptable format and is invalid after sixty (60) days.

Thanks,

Thomas Cupp
Vice President

ALASKA MECHANICAL INCORPORATED

907-267-0107 (office)
907-317-2686 (cell)

Willoughby Penal Fixtures (alternate)		Amount	Vendor	Lead Times
P-1 & P-1A Water Closet (REVISED)	$	**26,777.96**	Pacific	12-14 Weeks to Anchorage
P-2 Lavatory	$	**21,290.72**	Pacific	12-14 Weeks to Anchorage
P-3 Shower	$	**30,972.69**	Pacific	12-14 Weeks to Anchorage
P-3A ADA Shower	$	**57,548.59**	Pacific	12-14 Weeks to Anchorage
Floor Drain Adder (design change)	$	**1,136.98**	Keller	PO Released 7-25-22
AMI Direct Cost	$	137,726.94		
15% Mark Up	$	20,659.04		
Total Cost	$	**158,385.98**		

Note: Alterante floor mount water closet proposed. No wall carriers required.

Willoughby Industries, Inc.
5105 West 78th Street
Indianapolis, IN 46268
toll free (800) 428-4065
fax (317) 875-0837
www.willoughby-ind.com

WILLOUGHBY

QUOTATION

TO:

ROTH - SIRIANNI, LLC
8040 KING STREET
ANCHORAGE, AK 99518
US

ATTN: MIKE RONALDSON

JOB NAME:

MUNICIPALITY OF ANCHORAGE
NAVIGATION CENTER
ANCHORAGE, AK 99503-6634
US

Project No: 40339

Quote No.	Date	Cust No.	Delivery	F.O.B.	Terms	Expiration
2202079 REV04(07/25/22)	6/21/2022	R&C01	12-14 WEEKS ARO & SUB	INDIANAPOLIS	1% 10 N 20 DAYS	30 DAYS

Quantity	UM	Model	Description	Price $	Extension $
			**** IMPORTANT PRICING NOTE **** QUOTED PRICING IS VALID FOR ORDER PLACEMENT WITHIN 30 DAYS OF QUOTE DATE. DUE TO CURRENT RAW MATERIAL, SUPPLIES AND FUEL PRICE VOLATILITY, QUOTED PRICING WILL ONLY BE GOOD FOR ORDER PLACEMENT WITHIN 30 DAYS OF QUOTE DATE WITH COMPLETE RELEASE FOR PRODUCTION & SHIPMENT NOT TO EXCEED 120 DAYS FROM QUOTE DATE.		
			TAG01: P-1		
11	EA	ETW-1490-FM-FA-TS	STAINLESS STEEL TOILET, FRONT MOUNTED, WALL OUTLET, FLOOR MOUNTED, TOP SPUD, BLOWOUT		
11	EA	1.6GPF	ULF - ULTRA LOW 1.6 GALLONS PER FLUSH		
11	EA	GWC	GASKETED TOILET WASTE CONNECTION		
11	EA	HS	HINGED WHITE PLASTIC SEAT, OPEN FRONT LESS COVER		
11	EA	ASFVC	LIGATURE-RESISTANT FLUSH VALVE COVER FOR TOP SPUD TOILET ESTIMATED WEIGHT IS 75 POUNDS PER FIXTURE NOTE: LESS FLUSH VALVE AND CARRIER (NOT APPLICABLE FOR THIS FIXTURE) HYDRAULIC PUSH BUTTON ACUATED FLUSH VALVE REQUIRED FOR USE WITH FLUSH VALVE COVER	1,201.25	13,213.75
			TAG02: P-1A		
11	EA	ETW-1490-FM-FA-TS-HC	STAINLESS STEEL TOILET, FRONT MOUNTED, WALL OUTLET, FLOOR MOUNTED, TOP SPUD, ADA, BLOWOUT		
11	EA	1.6GPF	ULF - ULTRA LOW 1.6 GALLONS		

DELIVERY LEAD TIMES ARE APPROXIMATE AND ARE BASED ON MANUFACTURING TIMELINES IN PLACE AT TIME OF QUOTE. PLEASE CHECK WITH FACTORY AT TIME OF ORDER FOR CURRENT DELIVERY LEAD TIMES. PRICES GOOD FOR 30 DAYS. SUBJECT TO TERMS & CONDITIONS. WILLOUGHBY BIDS THIS PROJECT AS CLOSE AN EQUAL AS POSSIBLE. GOODS OF U.S. ORIGIN. QUOTED IN U.S. DOLLARS. WILLOUGHBY PRODUCTS ARE MADE IN THE USA! ABOVE QUANTITIES ARE ESTIMATES ONLY. VERIFY ALL QUANTITIES BEFORE ORDERING. IF LIFTGATE DELIVERY IS REQUIRED, ORDER IS SUBJECT TO ADDITIONAL FREIGHT COSTS.

*WARNING: Cancer and Reproductive Harm - www.P65Warnings.ca.gov *California P65 product/package warning label required*

By: JOSH WOODALL

Willoughby Industries, Inc.
5105 West 78th Street
Indianapolis, IN 46268
toll free (800) 428-4065
fax (317) 875-0837
www.willoughby-ind.com

QUOTATION

TO:

ROTH - SIRIANNI, LLC
8040 KING STREET
ANCHORAGE, AK 99518
US

ATTN: MIKE RONALDSON

JOB NAME:

MUNICIPALITY OF ANCHORAGE
NAVIGATION CENTER
ANCHORAGE, AK 99503-6634
US

Project No: 40339

Quote No.	Date	Cust No.	Delivery	F.O.B.	Terms	Expiration
2202079 REV04(07/25/22)	6/21/2022	R&C01	12-14 WEEKS ARO & SUB	INDIANAPOLIS	1% 10 N 20 DAYS	30 DAYS

Quantity	UM	Model	Description	Price $	Extension $
			PER FLUSH		
11	EA	GWC	GASKETED TOILET WASTE CONNECTION		
11	EA	HS	HINGED WHITE PLASTIC SEAT, OPEN FRONT LESS COVER		
11	EA	ASFVCADA	LIGATURE-RESISTANT ADA FLUSH VALVE COVER FOR TOP SPUD TOILET ESTIMATED WEIGHT IS 75 POUNDS PER FIXTURE NOTE: LESS FLUSH VALVE AND CARRIER (NOT APPLICABLE FOR THIS FIXTURE) HYDRAULIC PUSH BUTTON ACTUATED FLUSH VALVE REQUIRED FOR USE WITH FLUSH VALVE COVER	1,233.11	13,564.21
			TAG03: P-2		
22	EA	HS-1014-96-HC-FA	SECURITY LAVATORY, 18" WIDE, ADA, FRONT ACCESS, RECTANGULAR BOWL		
22	EA	DMS	DECK MOUNTED SPOUT (PER BOWL)		
22	EA	PML2-PBH	DUAL TEMPERATURE PNEUMATIC PUSHBUTTON METERING VALVE, LEAD FREE, LIGATURE RESISTANT PNEUMATIC PUSH BUTTONS		
22	EA	RPT	REMOVABLE LAVATORY P-TRAP		

DE[illegible] LEAD TIMES ARE APPROXIMATE AND ARE BASED ON MANUFACTURING TIMELINES IN PLACE AT TIME OF QUOTE. PLEASE CHECK WITH FACTORY AT TIME OF ORDER FOR CU[illegible] DELIVERY LEAD TIMES. PRICES GOOD FOR 30 DAYS. SUBJECT TO TERMS & CONDITIONS. WILLOUGHBY BIDS THIS PROJECT AS CLOSE AN EQUAL AS POSSIBLE. GOODS OF U.S. [illegible]GIN. QUOTED IN U.S. DOLLARS. WILLOUGHBY PRODUCTS ARE MADE IN THE USA! ABOVE QUANTITIES ARE ESTIMATES ONLY. VERIFY ALL QUANTITIES BEFORE ORDERING. IF LIFTGATE DELIVERY IS REQUIRED, ORDER IS SUBJECT TO ADDITIONAL FREIGHT COSTS.

*WARNING: Cancer and Reproductive Harm - www.P65Warnings.ca.gov *California P65 product/package warning label required*

By: JOSH WOODALL

WILLOUGHBY

Willoughby Industries, Inc.
5105 West 78th Street
Indianapolis, IN 46268
toll free (800) 428-4065
fax (317) 875-0837
www.willoughby-ind.com

QUOTATION

TO:
ROTH - SIRIANNI, LLC
8040 KING STREET
ANCHORAGE, AK 99518
US

ATTN: MIKE RONALDSON

JOB NAME:
MUNICIPALITY OF ANCHORAGE
NAVIGATION CENTER
ANCHORAGE, AK 99503-6634
US

Project No: 40339

Quote No.	Date	Cust No.	Delivery	F.O.B.	Terms	Expiration
2202079 REV04(07/25/22)	6/21/2022	R&C01	12-14 WEEKS ARO & SUB	INDIANAPOLIS	1% 10 N 20 DAYS	30 DAYS

Quantity	UM	Model	Description	Price $	Extension $
			NOTE: LESS CARRIER ESTIMATED WEIGHT IS 50 POUNDS PER FIXTURE WRITTEN SPECIFICATION AND/OR PLUMBING FIXTURES SCHEDULE IS VAGUE AND/OR CONTRADICTORY. IF FIXTURE CONFIGURATION CHANGES AND/OR MODIFICATIONS ARE REQUIRED, PLEASE CONTACT FACTORY FOR PRICING.	967.76	21,290.72
			TAG04: P-3		
9	EA	US-3636-FA	SECURITY CABINET SHOWER, 36" X 36" UNITIZED, FRONT ACCESS		
9	EA	PML1-PBH	SINGLE TEMPERATURE PNEUMATIC PUSHBUTTON METERING VALVE, LEAD FREE, LIGATURE RESISTANT PNEUMATIC PUSH BUTTON		
9	EA	1.5GPM	1.5 GPM SHOWER FLOW RATE		
9	EA	NPS	NON-ADJUSTABLE PENAL SHOWER HEAD		
9	EA	NHD	NO-HUB SHOWER DRAIN, 2"		
9	EA	RD(1)	RECESSED SOAP DISH, SINGLE STATION SHOWER ESTIMATED WEIGHT IS 350 POUNDS PER FIXTURE WRITTEN SPECIFICATION AND/OR PLUMBING FIXTURES SCHEDULE IS VAGUE AND/OR CONTRADICTORY. IF FIXTURE CONFIGURATION CHANGES AND/OR MODIFICATIONS ARE REQUIRED, PLEASE CONTACT FACTORY FOR PRICING.	3,441.41	30,972.69

DELIVERY LEAD TIMES ARE APPROXIMATE AND ARE BASED ON MANUFACTURING TIMELINES IN PLACE AT TIME OF QUOTE. PLEASE CHECK WITH FACTORY AT TIME OF ORDER FOR CURRENT DELIVERY LEAD TIMES. PRICES GOOD FOR 30 DAYS. SUBJECT TO TERMS & CONDITIONS. WILLOUGHBY BIDS THIS PROJECT AS CLOSE AN EQUAL AS POSSIBLE. GOODS OF U.S. ORIGIN. QUOTED IN U.S. DOLLARS. WILLOUGHBY PRODUCTS ARE MADE IN THE USA! ABOVE QUANTITIES ARE ESTIMATES ONLY. VERIFY ALL QUANTITIES BEFORE ORDERING. IF LIFTGATE DELIVERY IS REQUIRED, ORDER IS SUBJECT TO ADDITIONAL FREIGHT COSTS.

*WARNING: Cancer and Reproductive Harm - www.P65Warnings.ca.gov *California P65 product/package warning label required*

By: JOSH WOODALL

Willoughby Industries, Inc.
5105 West 78th Street
Indianapolis, IN 46268
toll free (800) 428-4065
fax (317) 875-0837
www.willoughby-ind.com

QUOTATION

TO:
ROTH - SIRIANNI, LLC
8040 KING STREET
ANCHORAGE, AK 99518
US

ATTN: MIKE RONALDSON

JOB NAME:
MUNICIPALITY OF ANCHORAGE
NAVIGATION CENTER
ANCHORAGE, AK 99503-6634
US

Project No: 40339

Quote No.	Date	Cust No.	Delivery	F.O.B.	Terms	Expiration
2202079 REV04(07/25/22)	6/21/2022	R&C01	12-14 WEEKS ARO & SUB	INDIANAPOLIS	1% 10 N 20 DAYS	30 DAYS

Quantity	UM	Model	Description	Price $	Extension $
			TAG05: P-3A		
11	EA	US-3636-HC-FA	SECURITY CABINET SHOWER, 36" X 36" UNITIZED, ADA, FRONT ACCESS, WITH (GB3318) L-SHAPED GRAB BAR, (GB24V) VERTICAL GRAB BAR, AND (FSS) STAINLESS STEEL FOLD-UP SEAT		
11	EA	PML1-MA2-PBH	SINGLE TEMPERATURE PNEUMATIC PUSHBUTTON METERING VALVE, DUAL MANIFOLD, LEAD FREE, LIGATURE RESISTANT PNEUMATIC PUSH BUTTONS		
11	EA	1.5GPM	1.5 GPM SHOWER FLOW RATE		
11	EA	NPS	NON-ADJUSTABLE PENAL SHOWER HEAD		
11	EA	FX	HANDHELD FLEXSHOWER WITH QUICK DISCONNECT AND VACUUM BREAKER		
11	EA	ICD	INSIDE CAULK SHOWER DRAIN, 2"		
11	EA	TH1	RELEASE TOWEL HOOK, SINGLE, FIXTURE MOUNTED		
11	EA	RD(1)	RECESSED SOAP DISH, SINGLE STATION SHOWER		
			ESTIMATED WEIGHT IS 450 POUNDS PER FIXTURE		
			WRITTEN SPECIFICATION AND/OR PLUMBING FIXTURES SCHEDULE IS VAGUE AND/OR CONTRADICTORY. IF FIXTURE CONFIGURATION CHANGES AND/OR MODIFICATIONS ARE REQUIRED, PLEASE CONTACT FACTORY FOR PRICING.	5,231.69	57,548.59

RY LEAD TIMES ARE APPROXIMATE AND ARE BASED ON MANUFACTURING TIMELINES IN PLACE AT TIME OF QUOTE. PLEASE CHECK WITH FACTORY AT TIME OF ORDER FOR CURRENT DELIVERY LEAD TIMES. PRICES GOOD FOR 30 DAYS. SUBJECT TO TERMS & CONDITIONS. WILLOUGHBY BIDS THIS PROJECT AS CLOSE AN EQUAL AS POSSIBLE. GOODS OF U.S. ORIGIN. QUOTED IN U.S. DOLLARS. WILLOUGHBY PRODUCTS ARE MADE IN THE USA! ABOVE QUANTITIES ARE ESTIMATES ONLY. VERIFY ALL QUANTITIES BEFORE ORDERING. IF LIFTGATE DELIVERY IS REQUIRED, ORDER IS SUBJECT TO ADDITIONAL FREIGHT COSTS.

WARNING: Cancer and Reproductive Harm - www.P65Warnings.ca.gov *California P65 product/package warning label required

By: JOSH WOODALL

Willoughby Industries, Inc.
5105 West 78th Street
Indianapolis, IN 46268
toll free (800) 428-4065
fax (317) 875-0837
www.willoughby-ind.com

WILLOUGHBY

QUOTATION

TO:

ROTH - SIRIANNI, LLC
8040 KING STREET
ANCHORAGE, AK 99518
US

ATTN: MIKE RONALDSON

JOB NAME:

MUNICIPALITY OF ANCHORAGE
NAVIGATION CENTER
ANCHORAGE, AK 99503-6634
US

Project No: 40339

Quote No.	Date	Cust No.	Delivery	F.O.B.	Terms	Expiration
2202079 REV04(07/25/22)	6/21/2022	R&C01	12-14 WEEKS ARO & SUB	INDIANAPOLIS	1% 10 N 20 DAYS	30 DAYS

Quantity	UM	Model	Description	Price $	Extension $
			Total for Quote $		136,589.96

DELIVERY LEAD TIMES ARE APPROXIMATE AND ARE BASED ON MANUFACTURING TIMELINES IN PLACE AT TIME OF QUOTE. PLEASE CHECK WITH FACTORY AT TIME OF ORDER FOR CURRENT DELIVERY LEAD TIMES. PRICES GOOD FOR 30 DAYS. SUBJECT TO TERMS & CONDITIONS. WILLOUGHBY BIDS THIS PROJECT AS CLOSE AN EQUAL AS POSSIBLE. GOODS OF U.S. ORIGIN. QUOTED IN U.S. DOLLARS. WILLOUGHBY PRODUCTS ARE MADE IN THE USA! ABOVE QUANTITIES ARE ESTIMATES ONLY. VERIFY ALL QUANTITIES BEFORE ORDERING. IF LIFTGATE DELIVERY IS REQUIRED, ORDER IS SUBJECT TO ADDITIONAL FREIGHT COSTS.

*WARNING: Cancer and Reproductive Harm - www.P65Warnings.ca.gov *California P65 product/package warning label required*

By: JOSH WOODALL

WILLOUGHBY INDUSTRIES, INC. WILL NOT RELEASE THIS PRODUCT FOR PRODUCTION WITHOUT RECEIVING ALL OF THE FOLLOWING INFORMATION:

- ✓ A complete & approved submittal package returned to Willoughby Industries, Inc.
- ✓ Specify required details listed on the contractor checklists throughout this submittal package. (Checklists are located before the specification sheets for each individual fixture.)
- ✓ Proper purchase order including:
  - Our Terms of Sale
  - "Bill To" & "Ship To" Addresses
  - Quantities
  - Model / Part #'s
  - Authorized Signature
  - Job Site Contact

In wall / floor material (i.e.: wall sleeves, wall frames, access boxes, & detox units) will ship approximately N/A **weeks after receipt of all information listed above.**

Fixtures will ship approximately 12 - 14 **weeks after receipt of all information listed above.**

Willoughby
Project # 40339 **Item #** P-1

WILLOUGHBY INDUSTRIES, INC.

Contractor Checklist for Water Closets

This information must be received for order to be processed.
(Standard accessory locations shown on drawings will be used if no information is given).

- ❑ No Information Needed:

I have reviewed the submittal package for this fixture. I have verified that the information given with regards to the above questions is correct and this fixture is released for production.

Signature_____ Company_____ Date_____

Willoughby Industries - *Security Products*

WILLOUGHBY

ETW-1490-FM-FA Stainless Steel Front Mounted Wall Outlet Floor Mounted Blowout Series Toilet

P-1

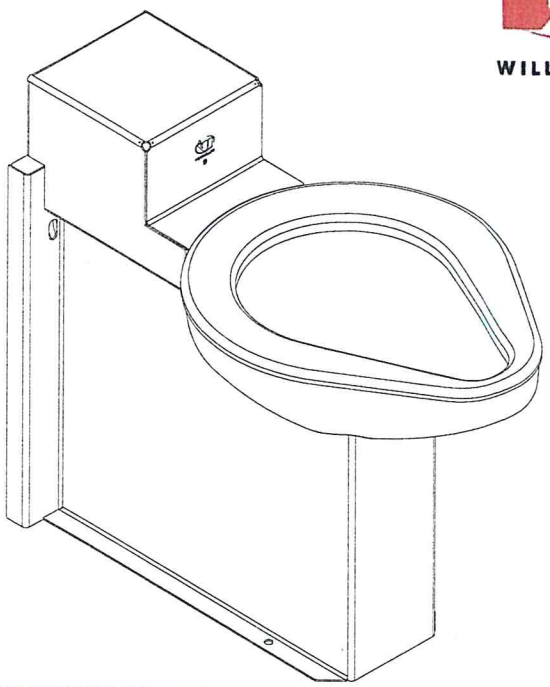

(1.6 GPF UNIT W/ 15" A.F.F. SEAT HEIGHT* SHOWN)
(Unit may be shown with optional features)

WaterSense Meets EPA Criteria
Certified by CSA Group
WaterSense certified only for use with a certified high-efficiency flushometer

IN COMPLIANCE WITH A.D.A. 2010

** USE "HC" SUFFIX FOR 18" A.F.F.SEAT HEIGHT

To specify fixture and accessories, use the Model Number and Options page.

Example: To specify a Front Access, Stainless Steel, Floor Mounted, Blowout Series Toilet with back spud, standard 15" seat height, 1.6 GPF, gasketed waste connection, hydraulic flush valve, flush valve connection, high polish seat, wall template, and toilet shipping cover

Use the following Willoughby Model Number:
ETW-1490-FM-FA-BS-1.6-GWC-FV-FVT-HPS-MT-TSC

Recommended Specifications

Stainless Steel, Front Mounted, Wall Outlet, Floor Mounted, Blowout Series Toilet shall be: Willoughby Model No. **ETW-1490-FM-FA** (Select from model number and options list on next page)

Fixture shall be fabricated from 14 gauge, type 304 stainless steel. The construction shall be all welded, with exposed stainless surfaces polished to a #4 satin finish.

Standard toilet shall include:
- Elongated toilet bowl with contoured seat
- Integral crevice-free self-draining flushing rim with positive afterfill
- Fully enclosed 2-3/8" O.D. trap which shall maintain a minimum 2" seal and pass a 2" ball
- Bead blast finish bowl interior

Toilet shall be blowout type, requiring 35 PSI minimum flushing pressure. Model shall meet the requirements of ASME A112.19.3/CSA B45.4.

Fixture shall withstand loadings of 5,000 lbs. without permanent damage.

Anchoring shall be through the front and through the floor (anchoring hardware provided by others).

Unit requires no chase area for installation and maintenance unless specified with any Toilet Waste Extension options or Toilet Overflow Preventer options.

On back to back fixture installations, do not use standard cross type waste fitting: cross flow may result due to blowout jet action. Use sanitary or offset type waste fittings.

Note: Unit will pass a 2" ball.

Note: Fixture should only be used with a listed high-efficiency flushometer to ensure the complete system meets the requirements of WaterSense.

WARNING: Cancer and Reproductive Harm
- www.P65Warnings.ca.gov

visit our website at www.willoughby-ind.com
5105 West 78th Street • Indianapolis, IN. 46268
(317) 875-0830 • Fax: (317) 875-0837 • (800) 428-4065

MADE IN THE U.S.A.

© Rev. 2/2022

MODEL NUMBER AND OPTIONS:

1.) Base Model Number:

- ✓ ETW-1490-FM-FA — Stainless Steel, Front Mounted, Wall Outlet, Floor Mounted, Blowout Series Toilet

2.) Inlet Location:

- ☐ BS Back Spud
- ✓ TS Top Spud

3.) Toilet Seat Height:

- ✓ 15" Seat Height (Standard)
- ☐ HC 18" Seat Height, Handicap-ADA Compliant

4.) Flush Valve GPF (Must Specify if FV or EFVP is Selected):

- ☐ 1.28 GPF HET (4.8 Lpf) (WaterSense Labeled)
- ✓ 1.6 GPF ULF (6.0 Lpf)
- ☐ 3.5 GPF (13.2 Lpf)

5.) Toilet Waste:

- ✓ GWC Gasketed Waste Connection (Standard)
- ☐ PC3 Pinned Clean-out Plug PVC-3"
- ☐ PCB3 Pinned Clean-out Plug Brass-3"
- ☐ PC4 Pinned Clean-out Plug PVC-4"
- ☐ PCB4 Pinned Clean-out Plug Brass-4"

6.) Other Options:

- ☐ T4 Manual Reset Toilet Overflow Preventer, Requires: (FV) Hydraulic Flush Valve and Accessible Chase
- ☐ ET4 Electronic Toilet Overflow Preventer*, Requires (EFVP), Accessible Chase, & (WUCC-3010) or (WMSII) control
- ☐ FV Hydraulic Flush Valve (Includes Actuator)
- ☐ EFVP Electronic Flush Valve w/ (PZPB) Ligature-resistant Piezo Push Button (Pick Control)*/**
- ☐ FVT Flush Valve Connection (Back Spud Only)
- ✓ ASFVC Flush Valve Cover (Ligature-resistant, Top Spud Only)**
- ☐ ASFVCADA Ligature-resistant ADA Flush Valve Cover (Top Spud Only)**

[CONTINUED IN NEXT COLUMN:]

[Other Options CONTINUED:]

- ☐ AP Flush Valve Access Panel (Allows access to chase mounted flush valve from fixture side)
- ✓ HS Hinged White Plastic Seat (No Cover, not recommended for Maximum Security/Ligature-resistant use)
- ☐ DC Decorator Color (Fixture exterior only - White)
- ☐ TF24H Hard-wired Transformer, 110VAC to 24VAC*
- ☐ TF24P Plug-in Transformer, 110VAC to 24VAC*
- ☐ HPS High Polish Seat
- ☐ MT Wall Template
- ☐ TSC Toilet Shipping Cover
- ☐ RTH1 Wall Mounted Recessed Tissue Holder (Rear Mounted, Requires Accessible Chase)
- ☐ RTH2 Wall Mounted Recessed Tissue Holder (Front Mounted, 4-1/2" Depth)
- ☐ RFVB Remote Flush Valve with Box
- ☐ REFVB Remote Electronic Flush Valve with Box*
- ☐ Other _____

7.) Electronic Controls* (Must Use Electronic Flush Valve):

- ☐ WUFC-4000 ☐ Pneutronic ☐ WMSII
- ☐ WUCC-3010 (Select WUCC-3010 Control if pairing a Toilet with a Lavatory or if the Toilet is selected with an (ET4) overflow option)

*(Req. 110V power through ground fault interrupter (GFCI) receptacle)

****LIGATURE-RESISTANT DISCLAIMER**

This product is designed to minimize ligature points. While every effort has been made to reduce the possibility of ligature points, this product does not eliminate all risks. Ligature-Resistant products by Willoughby Industries are to be used in conjunction with, not as a replacement for, trained professionals.

Approved For Manufacturing By: _____ Date: _____ Company: _____

Wall Thickness: _____ Wall Type: _____

VERIFY ALL DIMENSIONS WITH FACTORY PRIOR TO ROUGH-IN

WILLOUGHBY RESERVES THE RIGHT TO MAKE CHANGES IN DESIGN AND DIMENSIONS WITHOUT FORMAL NOTICE AND WITHOUT INCURRING OBLIGATION.

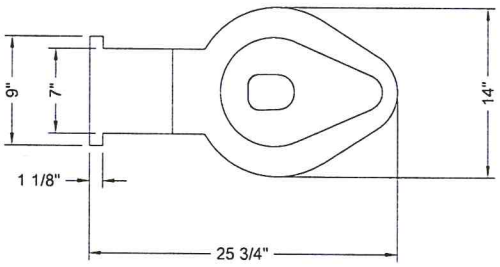

PLAN VIEW

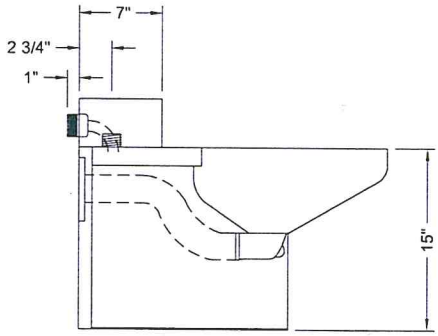

SIDE VIEW

visit our website at www.willoughby-ind.com

5105 West 78th Street • Indianapolis, IN. 46268

(317) 875-0830 • Fax: (317) 875-0837 • (800) 428-4065

MADE IN THE **U.S.A.**

© Rev. 2/2022

TAG: P-1

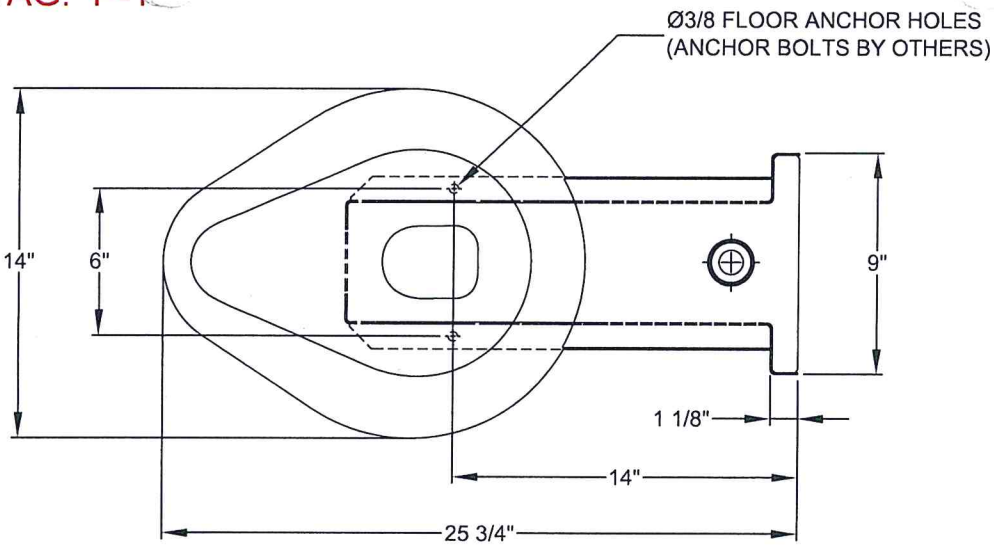

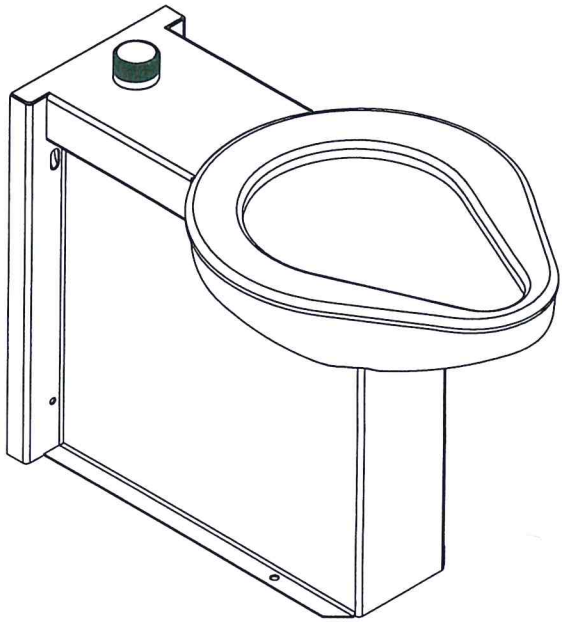

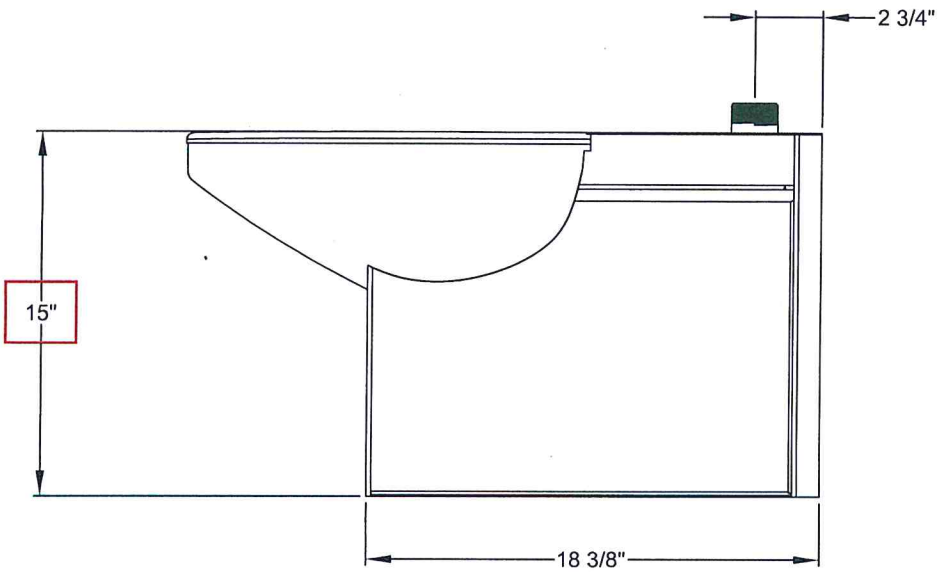

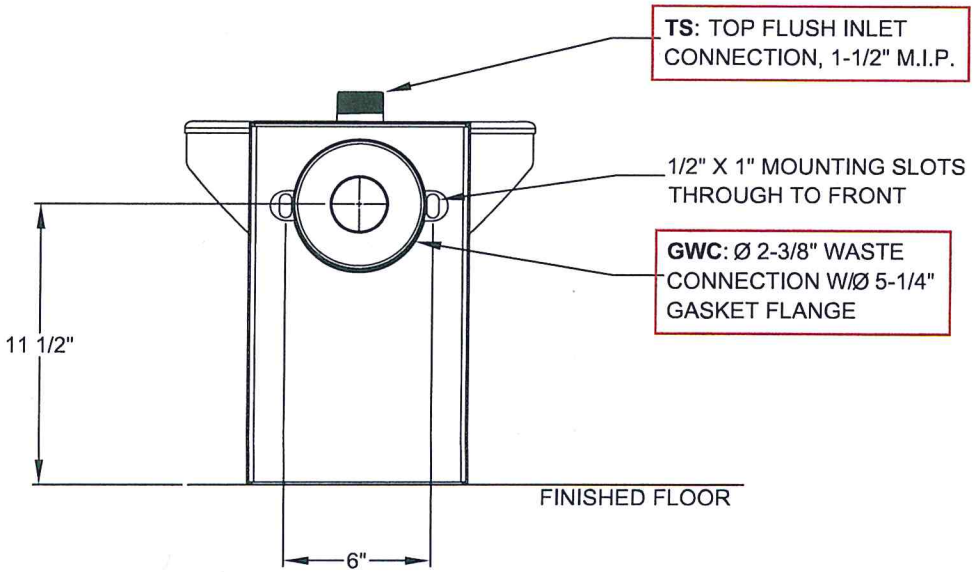

Willoughby Industries, Inc. Indianapolis, Indiana	TITLE / DESC.: ETW-1490-FM-FA ETW-1490-FM-FA-TS-GWC					PART #: T1490-X106
TOLERANCES EXCEPT AS NOTED	2 PLCS: ±0.03 3 PLCS: ±0.015 FRACTIONS: ±1/4"	SIZE: A	MAT'L: 14GA T304 STAINLESS STEEL, SATIN FINISH	REVISION: A	ORIG.: NAL 5/21/19	SUBMITTAL
		SCALE: 1:8	REF.:		REV.: NAL 1/18/21	SHEET: 1 OF 1

Willoughby Industries - *Security Products*

WILLOUGHBY

ASFVC
Ligature-resistant Flush Valve Cover

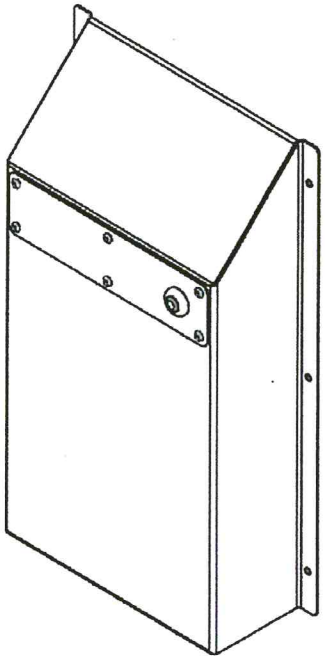

Stainless steel ligature-resistant flush valve cover shall be:
Willoughby Option No. **ASFVC**

Flush valve cover shall be fabricated from 14 GA, Type 304 stainless steel with exposed stainless steel surfaces polished to a #4 satin finish. Flush valve cover is supplied with Ø5/16" mounting holes, anchoring hardware is provided by others. Flush valve cover shall have a ligature-resistant sloped top, radiused vertical corners and a single access cover with a single push button hole for right or left hand toilet.

Options:

- ☐ DC Decorator Color (Fixture exterior only- White)
- ☐ For use with Willoughby push button actuator (double 'D' hole required)
- ☑ For use with Sloan push button actuator (Ø1-1/2" hole required)
- ☐ For use with another push button actuator (specify hole size:_____)

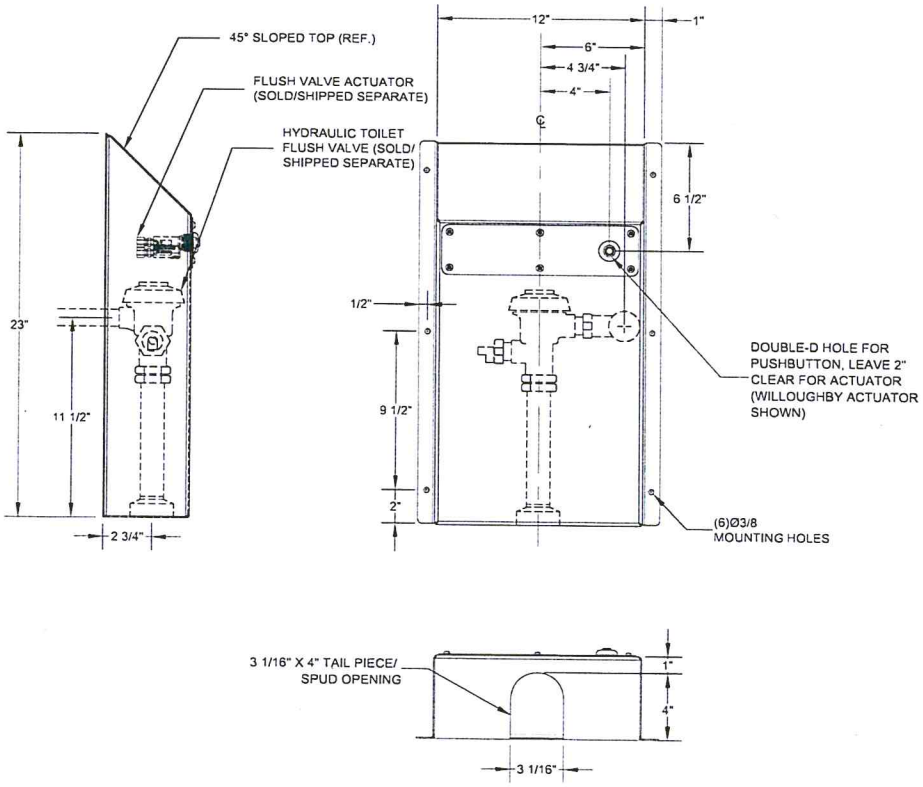

WARNING: Cancer and Reproductive Harm
- www.P65Warnings.ca.gov

visit our website at www.willoughby-ind.com
5105 West 78th Street • Indianapolis, IN. 46268
(317) 875-0830 • Fax: (317) 875-0837 • (800) 428-4065

MADE IN THE U.S.A.

© Rev. 3/2020

TAG: P-1 FVC

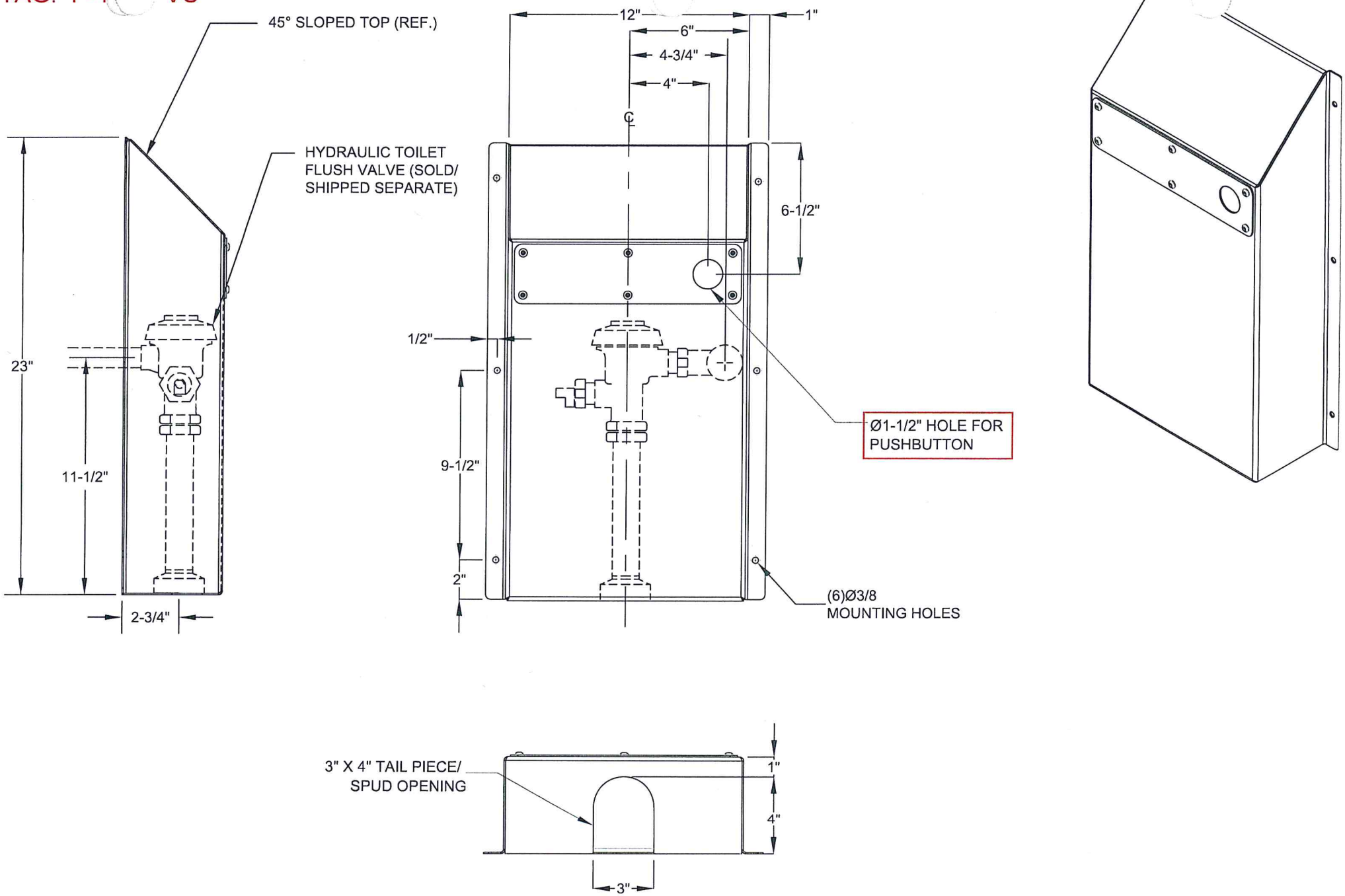

WILLOUGHBY	Willoughby Industries, Inc. Indianapolis, Indiana	TITLE / DESC.: FLUSH VALVE COVER, LIGATURE RESISTANT ASFVC				PART #: P181018A
TOLERANCES EXCEPT AS NOTED	2 PLCS: ±0.03 3 PLCS: ±0.015 FRACTIONS: ±1/4" ANGLE: ±1°	SIZE: A	MAT'L: 14 GA. #4 304 S/S	REVISION: B	ORIG.: NAL 9/5/18	STANDARD
		SCALE: 1:8	REF.:		REV.: NAL 11/30/21	SHEET: 1 OF 1

WILLOUGHBY	TITLE: (HS) HINGED TOILET SEAT MOUNTING DETAIL FOR P/N: 800050				DRAWING #: P151014A
	TOLERANCE: DIMENSIONS ARE +/- 1/4" EXCEPT AS NOTED	MATERIAL: AS NOTED	DRAWN BY: MW	DATE: 12/1/15	REV: B 10/8/19
			SCALE: NOT TO SCALE		STANDARD DWG.

NOTE:
SEE DWG# 800050 FOR DETAILS ON MOUNTING SEAT TO BRACKET

SPECIFIED SEAT COLOR
☑ WHITE- P/N: 800050

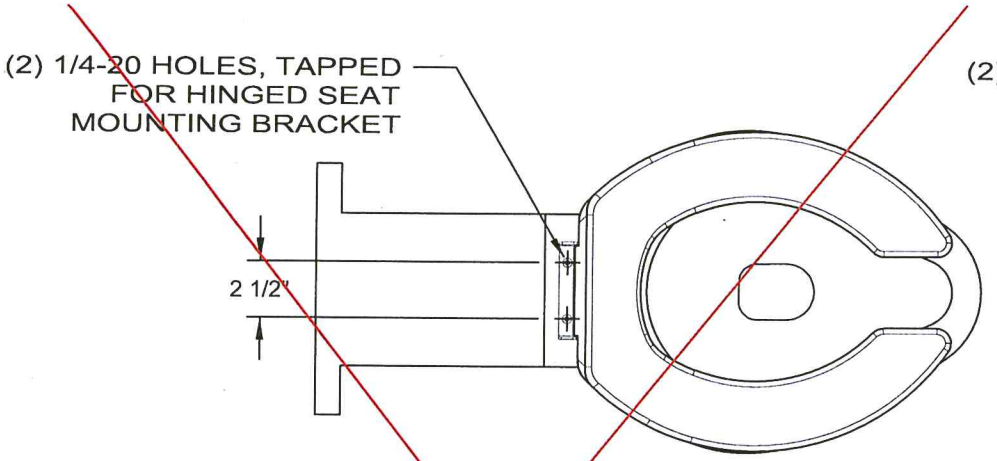

☐ SEAT MOUNTING FOR BACK SPUD

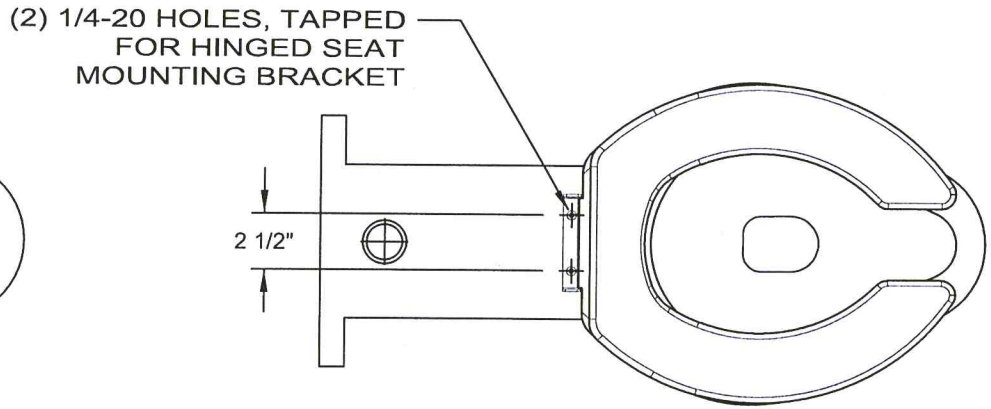

☑ SEAT MOUNTING FOR TOP SPUD

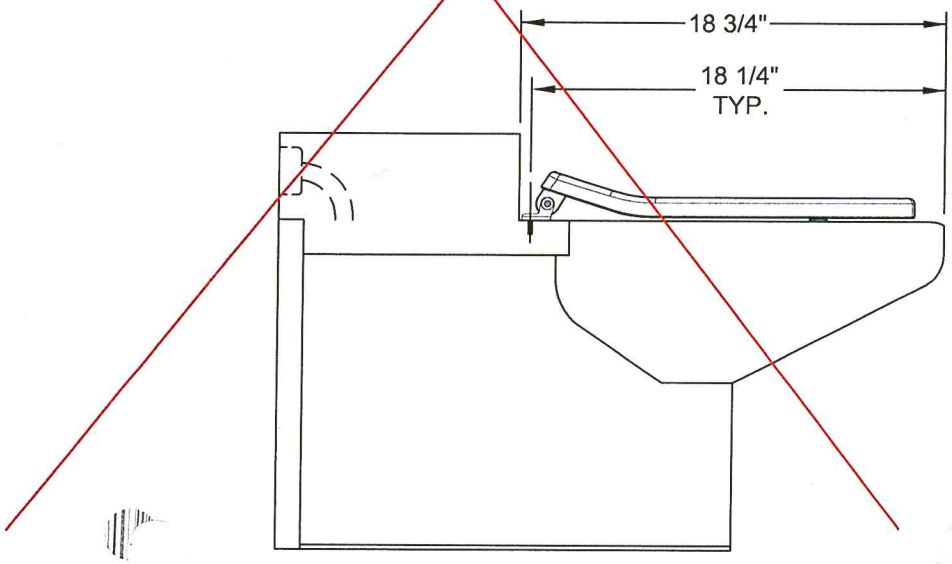

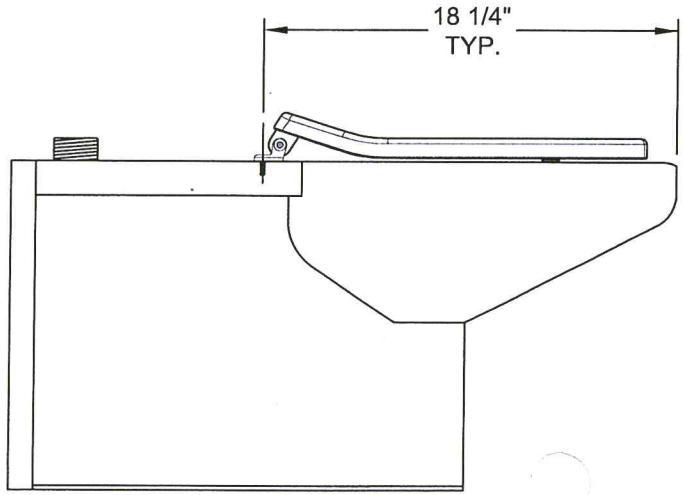

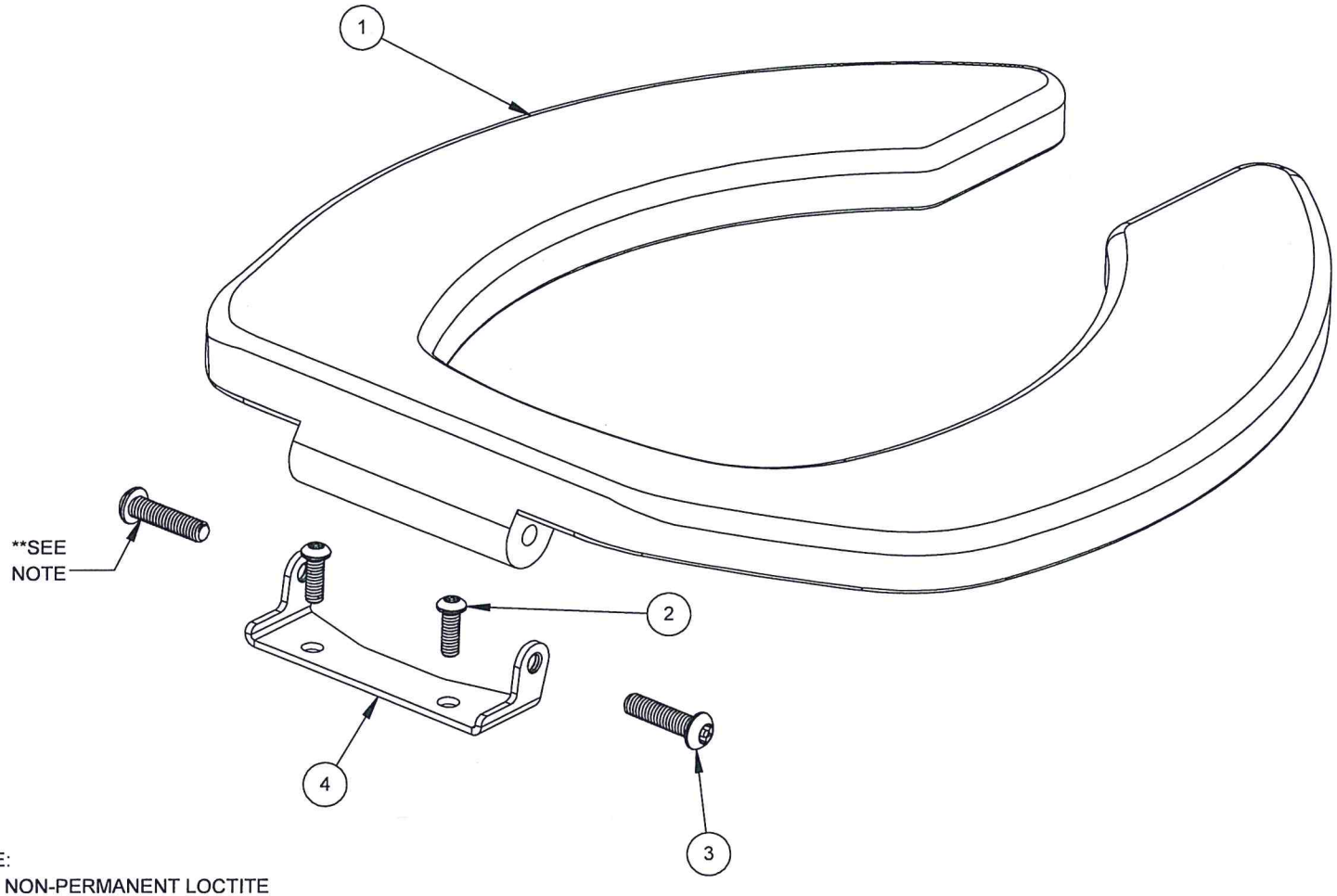

**NOTE:
APPLY NON-PERMANENT LOCTITE
WHEN INSTALLING THE 5/16 BOLTS. APPLY
THE LOCTITE AT THE BASE OF THREADS
CLOSEST TO THE BOLT HEAD.

ITEM #	PART #	DESCRIPTION	QTY.
1	380331	TOILET SEAT, 14x16, WHITE, STANDARD 1490	1
2	4502SSN	SCREW, 1/4-20 x 3/4 SECURITY SCREW (BH)	2
3	4518SSN	SCREW, SECURITY, BH, 5/16-18 x 1-1/4", SS, PIN-TORX	2
4	S101805	BRACKET, TOILET SEAT MOUNT, 955CT	1

WILLOUGHBY	Willoughby Industries, Inc. Indianapolis, Indiana			TITLE / DESC.: TOILET SEAT ASSEMBLY, WHITE, 1490			PART #: 800050
	TOLERANCES EXCEPT AS NOTED	2 PLCS: ±0.03 3 PLCS: ±0.015 FRACTIONS: ±1/32" ANGLE: ±1°	SIZE: A SCALE: 1:4	MAT'L: SEE BOM REF.:	REVISION: A	ORIG.: TRB 6/19/15 REV.: NAL 8/28/18	STANDARD SHEET: 1 OF 1

Willoughby
Project # 40339 **Item #** P-1A

WILLOUGHBY INDUSTRIES, INC.

Contractor Checklist for Water Closets

This information must be received for order to be processed.
(Standard accessory locations shown on drawings will be used if no information is given).

- ❑ No Information Needed

I have reviewed the submittal package for this fixture. I have verified that the information given with regards to the above questions is correct and this fixture is released for production.

Signature_____ Company_____ Date_____

Willoughby Industries - *Security Products*

WILLOUGHBY

ETW-1490-FM-FA Stainless Steel Front Mounted Wall Outlet Floor Mounted Blowout Series Toilet

P-1A

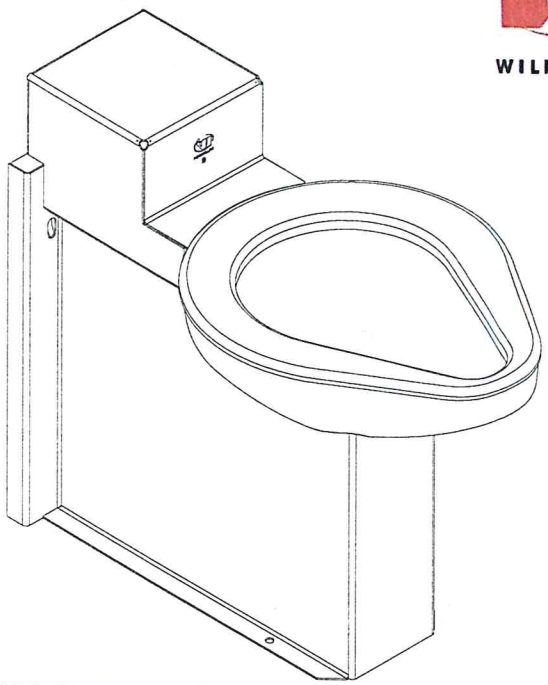

(1.6 GPF UNIT W/ 15" A.F.F. SEAT HEIGHT* SHOWN)
(Unit may be shown with optional features)

WaterSense Meets EPA Criteria
Certified by CSA Group
WaterSense certified only for use with a certified high-efficiency flushometer

IN COMPLIANCE WITH A.D.A. 2010

** USE "HC" SUFFIX FOR 18" A.F.F.SEAT HEIGHT

To specify fixture and accessories, use the Model Number and Options page.

Example: To specify a Front Access, Stainless Steel, Floor Mounted, Blowout Series Toilet with back spud, standard 15" seat height, 1.6 GPF, gasketed waste connection, hydraulic flush valve, flush valve connection, high polish seat, wall template, and toilet shipping cover

Use the following Willoughby Model Number:
ETW-1490-FM-FA-BS-1.6-GWC-FV-FVT-HPS-MT-TSC

Recommended Specifications

Stainless Steel, Front Mounted, Wall Outlet, Floor Mounted, Blowout Series Toilet shall be: Willoughby Model No. **ETW-1490-FM-FA** (Select from model number and options list on next page)

Fixture shall be fabricated from 14 gauge, type 304 stainless steel. The construction shall be all welded, with exposed stainless surfaces polished to a #4 satin finish.

Standard toilet shall include:
- Elongated toilet bowl with contoured seat
- Integral crevice-free self-draining flushing rim with positive afterfill
- Fully enclosed 2-3/8" O.D. trap which shall maintain a minimum 2" seal and pass a 2" ball
- Bead blast finish bowl interior

Toilet shall be blowout type, requiring 35 PSI minimum flushing pressure. Model shall meet the requirements of ASME A112.19.3/CSA B45.4.

Fixture shall withstand loadings of 5,000 lbs. without permanent damage.

Anchoring shall be through the front and through the floor (anchoring hardware provided by others).

Unit requires no chase area for installation and maintenance unless specified with any Toilet Waste Extension options or Toilet Overflow Preventer options.

On back to back fixture installations, do not use standard cross type waste fitting: cross flow may result due to blowout jet action. Use sanitary or offset type waste fittings.

Note: Unit will pass a 2" ball.

Note: Fixture should only be used with a listed high-efficiency flushometer to ensure the complete system meets the requirements of WaterSense.

WARNING: Cancer and Reproductive Harm
- www.P65Warnings.ca.gov

visit our website at www.willoughby-ind.com
5105 West 78th Street • Indianapolis, IN. 46268
(317) 875-0830 • Fax: (317) 875-0837 • (800) 428-4065

MADE IN THE U.S.A.

© Rev. 2/2022

MODEL NUMBER AND OPTIONS:

1.) Base Model Number:

- ✓ ETW-1490-FM-FA — Stainless Steel, Front Mounted, Wall Outlet, Floor Mounted, Blowout Series Toilet

2.) Inlet Location:

- ☐ BS Back Spud
- ✓ TS Top Spud

3.) Toilet Seat Height:

- ☐ 15" Seat Height (Standard)
- ✓ HC 18" Seat Height, Handicap-ADA Compliant

4.) Flush Valve GPF (Must Specify if FV or EFVP is Selected):

- ☐ 1.28 GPF HET (4.8 Lpf) (WaterSense Labeled)
- ✓ 1.6 GPF ULF (6.0 Lpf)
- ☐ 3.5 GPF (13.2 Lpf)

5.) Toilet Waste:

- ✓ GWC Gasketed Waste Connection (Standard)
- ☐ PC3 Pinned Clean-out Plug PVC-3"
- ☐ PCB3 Pinned Clean-out Plug Brass-3"
- ☐ PC4 Pinned Clean-out Plug PVC-4"
- ☐ PCB4 Pinned Clean-out Plug Brass-4"

6.) Other Options:

- ☐ T4 Manual Reset Toilet Overflow Preventer, Requires: (FV) Hydraulic Flush Valve and Accessible Chase
- ☐ ET4 Electronic Toilet Overflow Preventer*, Requires (EFVP), Accessible Chase, & (WUCC-3010) or (WMSII) control
- ☐ FV Hydraulic Flush Valve (Includes Actuator)
- ☐ EFVP Electronic Flush Valve w/ (PZPB) Ligature-resistant Piezo Push Button (Pick Control)*/**
- ☐ FVT Flush Valve Connection (Back Spud Only)
- ☐ ASFVC Flush Valve Cover (Ligature-resistant, Top Spud Only)**
- ✓ ASFVCADA Ligature-resistant ADA Flush Valve Cover (Top Spud Only)**

[CONTINUED IN NEXT COLUMN:]

[Other Options CONTINUED:]

- ☐ AP Flush Valve Access Panel (Allows access to chase mounted flush valve from fixture side)
- ✓ HS Hinged White Plastic Seat (No Cover, not recommended for Maximum Security/Ligature-resistant use)
- ☐ DC Decorator Color (Fixture exterior only - White)
- ☐ TF24H Hard-wired Transformer, 110VAC to 24VAC*
- ☐ TF24P Plug-in Transformer, 110VAC to 24VAC*
- ☐ HPS High Polish Seat
- ☐ MT Wall Template
- ☐ TSC Toilet Shipping Cover
- ☐ RTH1 Wall Mounted Recessed Tissue Holder (Rear Mounted, Requires Accessible Chase)
- ☐ RTH2 Wall Mounted Recessed Tissue Holder (Front Mounted, 4-1/2" Depth)
- ☐ RFVB Remote Flush Valve with Box
- ☐ REFVB Remote Electronic Flush Valve with Box*
- ☐ Other _____

7.) Electronic Controls* (Must Use Electronic Flush Valve):

- ☐ WUFC-4000 ☐ Pneutronic ☐ WMSII
- ☐ WUCC-3010 (Select WUCC-3010 Control if pairing a Toilet with a Lavatory or if the Toilet is selected with an (ET4) overflow option)

*(Req. 110V power through ground fault interrupter (GFCI) receptacle)

****LIGATURE-RESISTANT DISCLAIMER**

This product is designed to minimize ligature points. While every effort has been made to reduce the possibility of ligature points, this product does not eliminate all risks. Ligature-Resistant products by Willoughby Industries are to be used in conjunction with, not as a replacement for, trained professionals.

Approved For Manufacturing By: _____ Date: _____ Company: _____

Wall Thickness: _____ Wall Type: _____

VERIFY ALL DIMENSIONS WITH FACTORY PRIOR TO ROUGH-IN

WILLOUGHBY RESERVES THE RIGHT TO MAKE CHANGES IN DESIGN AND DIMENSIONS WITHOUT FORMAL NOTICE AND WITHOUT INCURRING OBLIGATION.

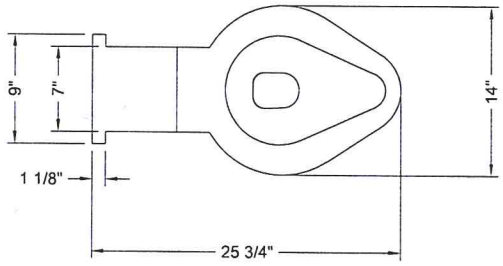

PLAN VIEW

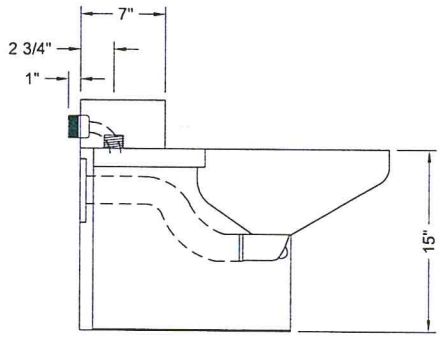

SIDE VIEW

visit our website at www.willoughby-ind.com
5105 West 78th Street • Indianapolis, IN. 46268
(317) 875-0830 • Fax: (317) 875-0837 • (800) 428-4065

MADE IN THE **U.S.A.**

© Rev. 2/2022

TAG: P-1A

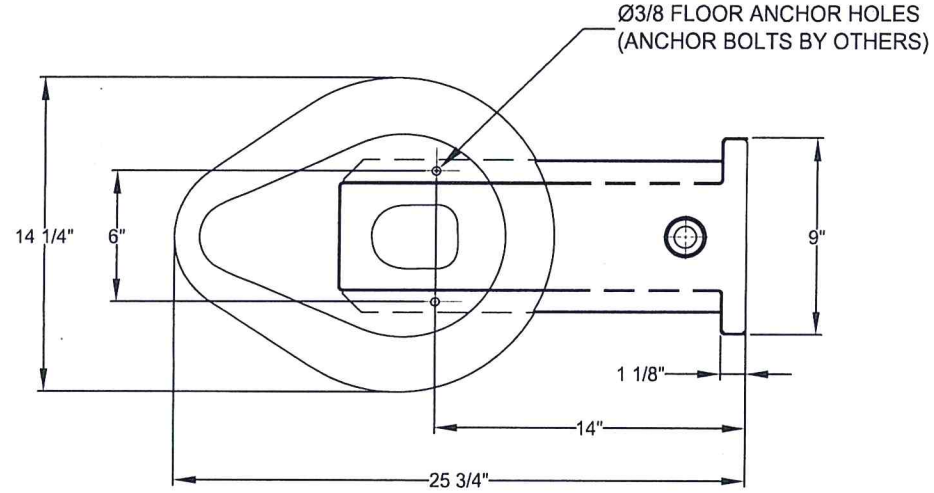

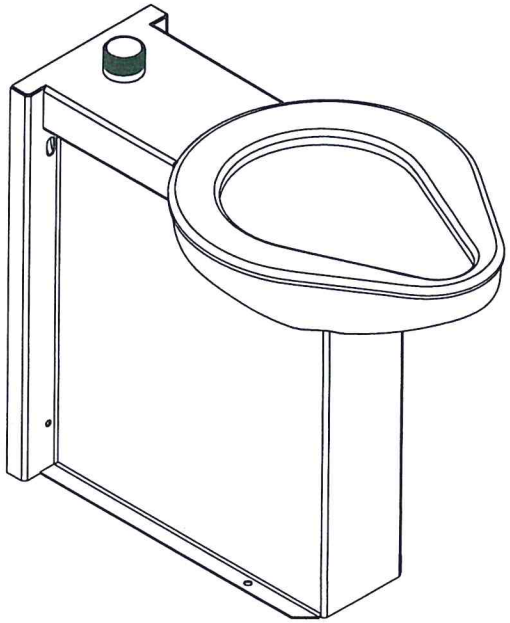

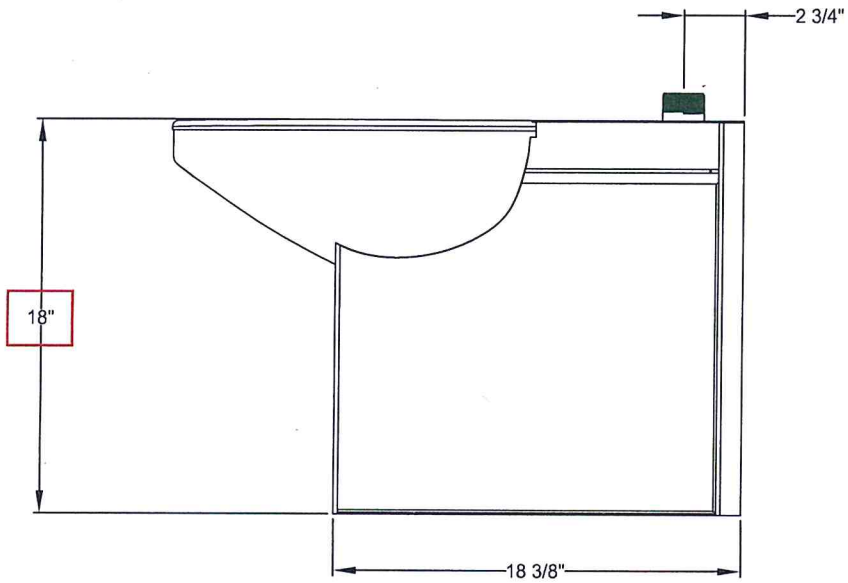

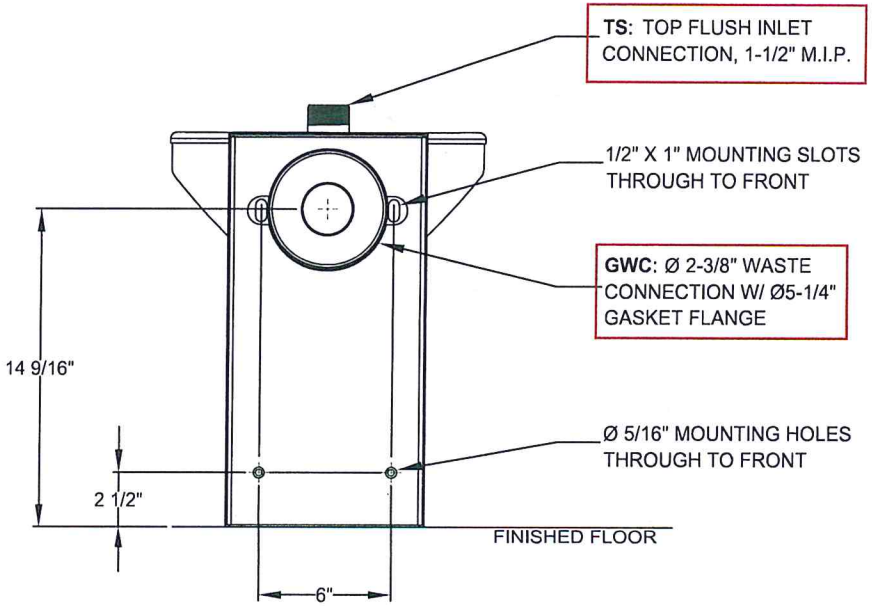

WILLOUGHBY	**Willoughby Industries, Inc.** Indianapolis, Indiana			TITLE / DESC.:	ETW-1490-FM-FA ETW-1490-FM-FA-TS-HC-GWC			PART #: T1490-X175
TOLERANCES EXCEPT AS NOTED	2 PLCS: ±0.03 3 PLCS: ±0.015 FRACTIONS: ±1/4" ANGLE: ±1°	SIZE: A		MAT'L: 14 GA., T304 S/S, #3 FINISH		REVISION: A	ORIG.: NAL 9/23/19	SUBMITTAL
		SCALE: 1:6		REF.:			REV.: NAL 9/23/19	SHEET: 1 OF 1

Willoughby Industries - *Security Products*

WILLOUGHBY

ASFVC-ADA
Ligature-resistant
ADA Compliant
Flush Valve Cover

Stainless steel ligature-resistant ADA compliant flush valve cover shall be:
Willoughby Option No. **ASFVC-ADA**

Flush valve cover shall be fabricated from 14 GA, Type 304 stainless steel with exposed stainless steel surfaces polished to a #4 satin finish. Flush valve cover is supplied with Ø5/16" mounting holes, anchoring hardware is provided by others. Flush valve cover shall have a ligature-resistant sloped top, radiused vertical corners, single access cover with a single push button hole for right or left hand toilet.

Options:

- ❑ DC Decorator Color (Fixture exterior only- White)
- ❑ For use with Willoughby push button actuator (double 'D' hole required)
- ☑ For use with Sloan push button actuator (Ø1-1/2" hole required)
- ❑ For use with another push button actuator (specify hole size:_____)

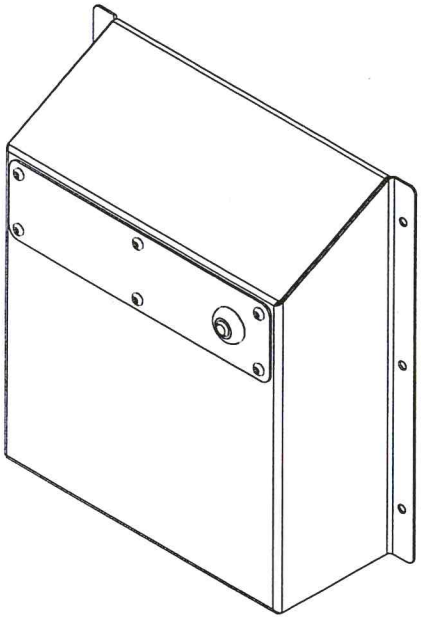

SHOWN WITH WILLOUGHBY 600317PM PUSH BUTTON

IN COMPLIANCE WITH A.D.A. 2010

FOR SLOAN HYDRAULIC FLUSH VALVE

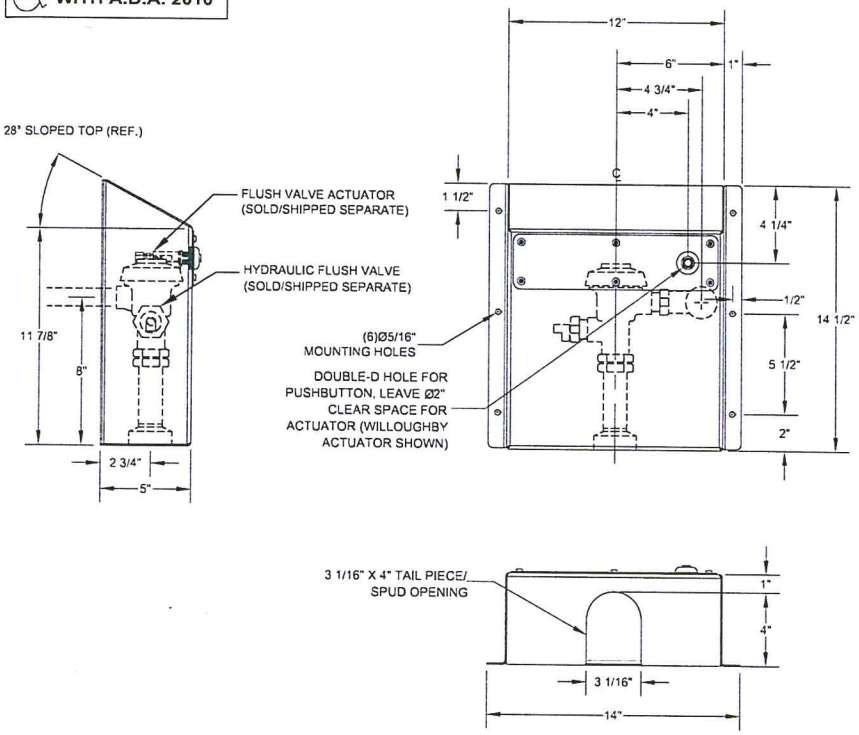

WARNING: Cancer and Reproductive Harm

- www.P65Warnings.ca.gov

visit our website at www.willoughby-ind.com
5105 West 78th Street • Indianapolis, IN. 46268
(317) 875-0830 • Fax: (317) 875-0837 • (800) 428-4065

MADE IN THE U.S.A.

© Rev. 10/2018

IN COMPLIANCE WITH A.D.A. 2010

FOR HYDRAULIC FLUSH VALVE TAG: P-1A ASFVCADA

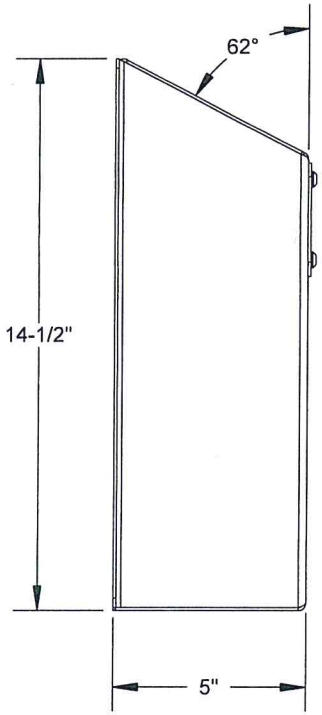

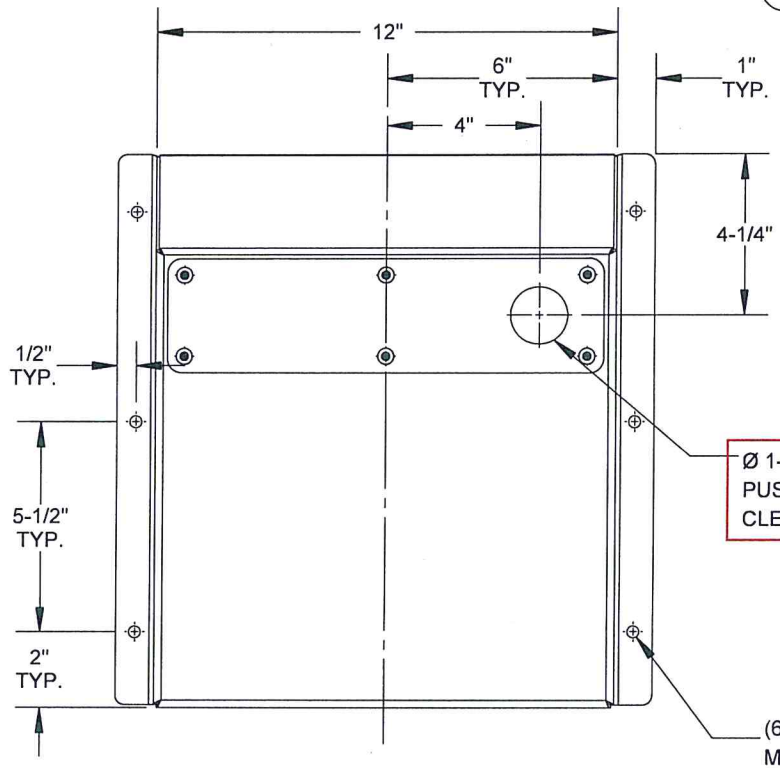

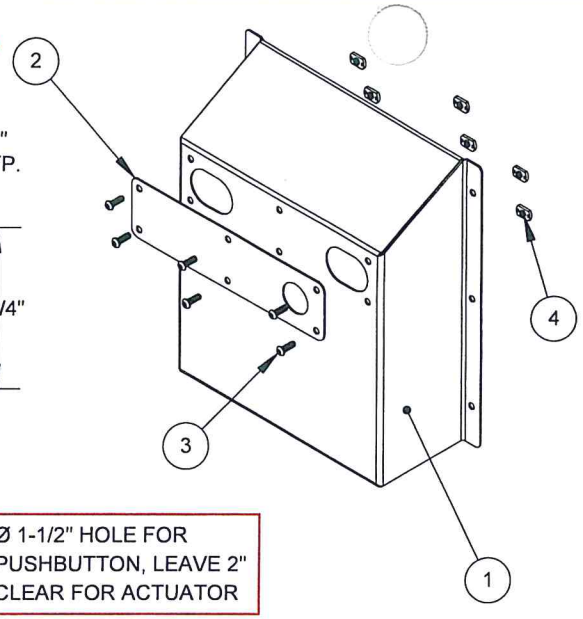

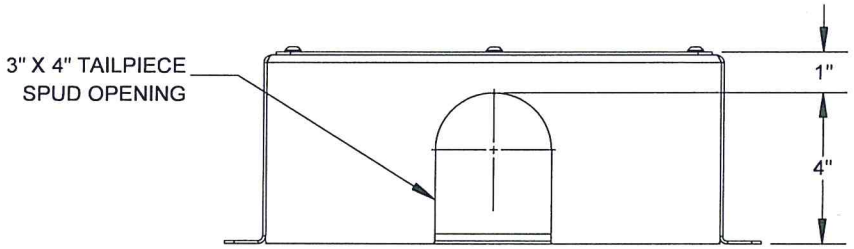

ITEM #	PART #	DESCRIPTION	QTY.
1	S102077	COVER - FLUSH VALVE - ADA LIGATURE RESISTANT - 14 1/2" X 12" X 5"	1
2	S104159	COVER - ACCESS - 11 3/8" X 3"	1
3	4502SSN	SCREW, 1/4-20 x 3/4 SECURITY SCREW (BH)	6
4	600003	WELD NUT, 1/4"-20, STAINLESS STEEL	6

WILLOUGHBY	**Willoughby Industries, Inc.** Indianapolis, Indiana	TITLE / DESC.: FLUSH VALVE COVER BOX, ASFVC-ADA ASFVC-ADA, R/L PUSHBUTTON, LIGATURE RESISTANT, 1-1/2 IN. HOLE				PART #: M2802-0168
TOLERANCES EXCEPT AS NOTED	2 PLCS: ±0.03 3 PLCS: ±0.015 FRACTIONS: ±1/4" ANGLE: ±1°	SIZE: A	MAT'L: 14GA #3 FINISH 304 S/S	REVISION: A	ORIG.: WDB 9/14/18	STANDARD
		SCALE: 1:5	REF.: M2802-0166		REV.: WDB 9/14/18	SHEET: 1 OF 1

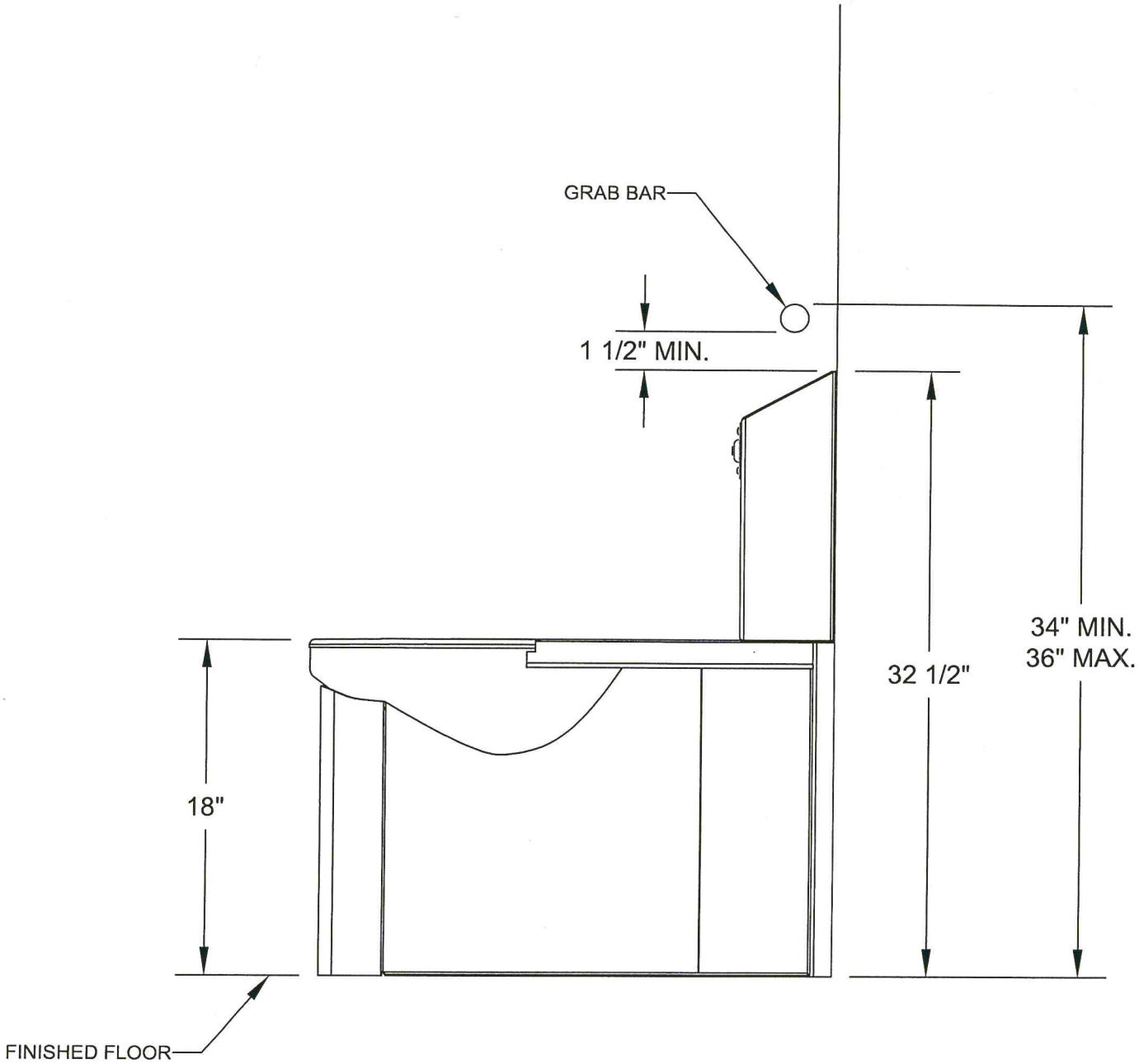

Willoughby Industries, Inc. Indianapolis, Indiana	TITLE / DESC.: ADA TOILET WITH FLUSH VALVE COVER AND GRAB BAR LAYOUT			PART #: P214015A
TOLERANCES EXCEPT AS NOTED — 2 PLCS: ±0.0; 3 PLCS: ±0.0; FRACTIONS: ±1/4"; ANGLE: ±1°	A	MAT'L:	REVISION: B	ORIG.: 10/21 — STANDARD
	1:6	REF.:	REV.: NA — 12/3/21	SHEET: 1 OF 1

WILLOUGHBY	TITLE: (HS) HINGED TOILET SEAT MOUNTING DETAIL FOR P/N: 80[illegible]0				DRAWING #: P1[illegible]014A	
	TOLERANCE: DIMENSIONS ARE +/- 1/4" EXCEPT AS NOTED	MATERIAL: AS NOTED	DRAWN BY: MW	DATE: 12/1/15	REV: B 10/8/19	STANDARD DWG.
			SCALE: NOT TO SCALE			

NOTE:
SEE DWG# 800050 FOR DETAILS ON MOUNTING SEAT TO BRACKET

SPECIFIED SEAT COLOR
☑ WHITE- P/N: 800050

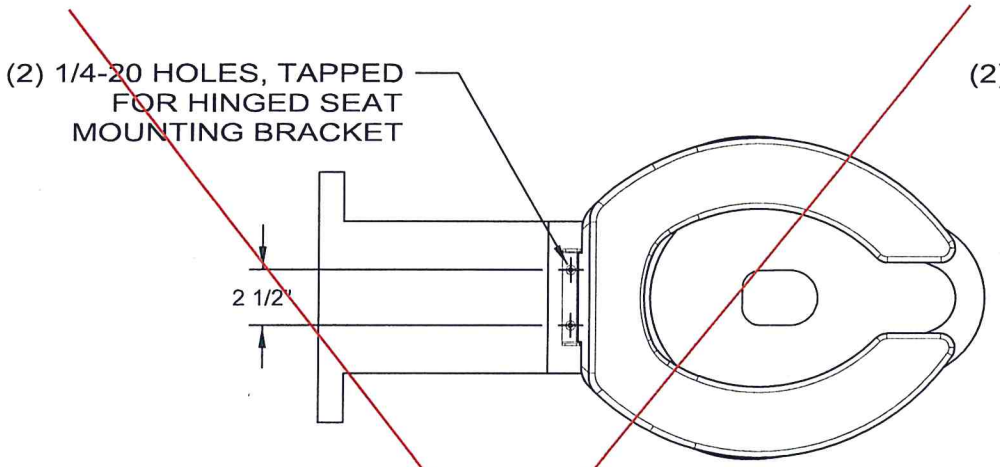

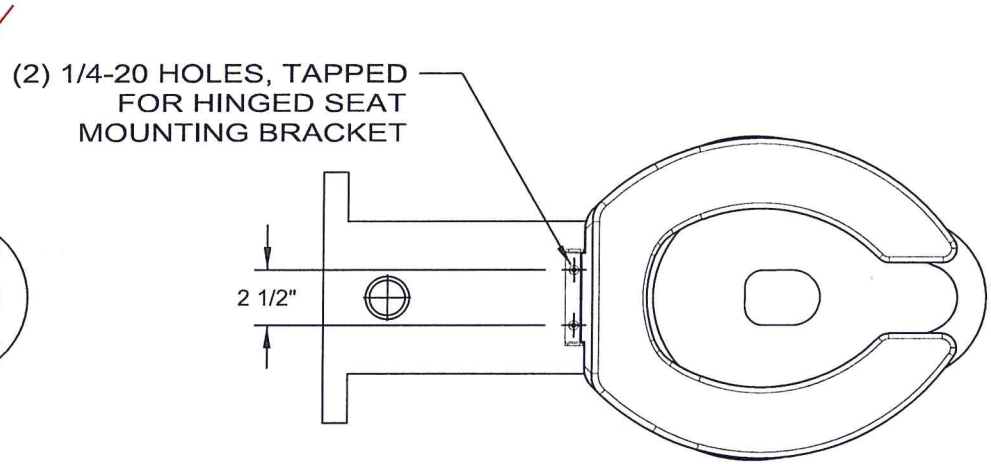

☐ SEAT MOUNTING FOR BACK SPUD

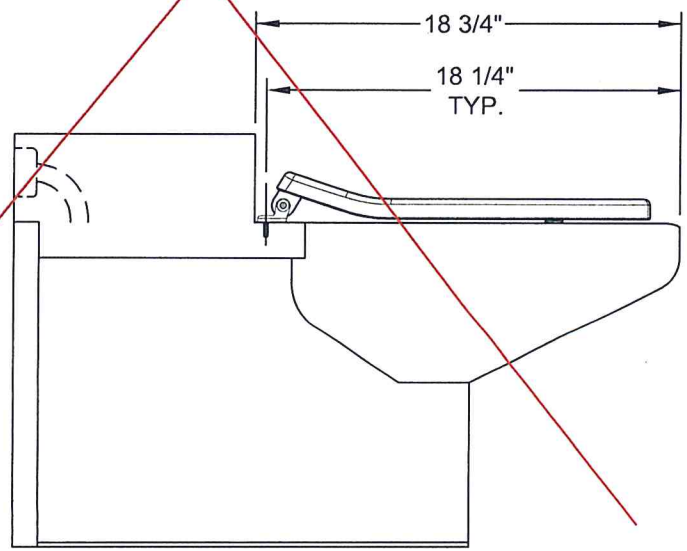

☑ SEAT MOUNTING FOR TOP SPUD

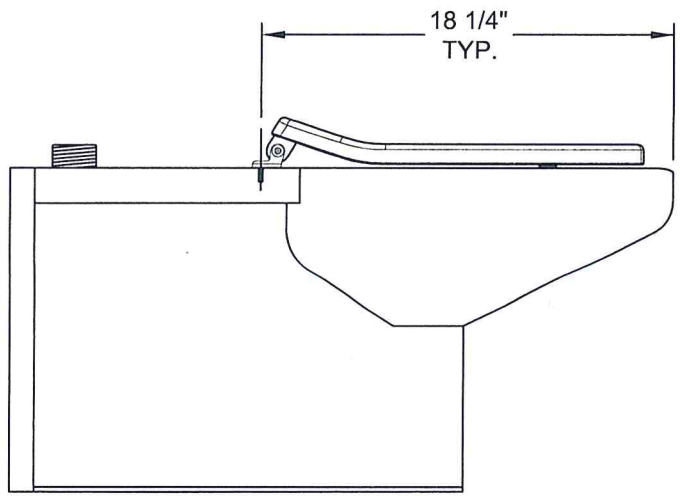

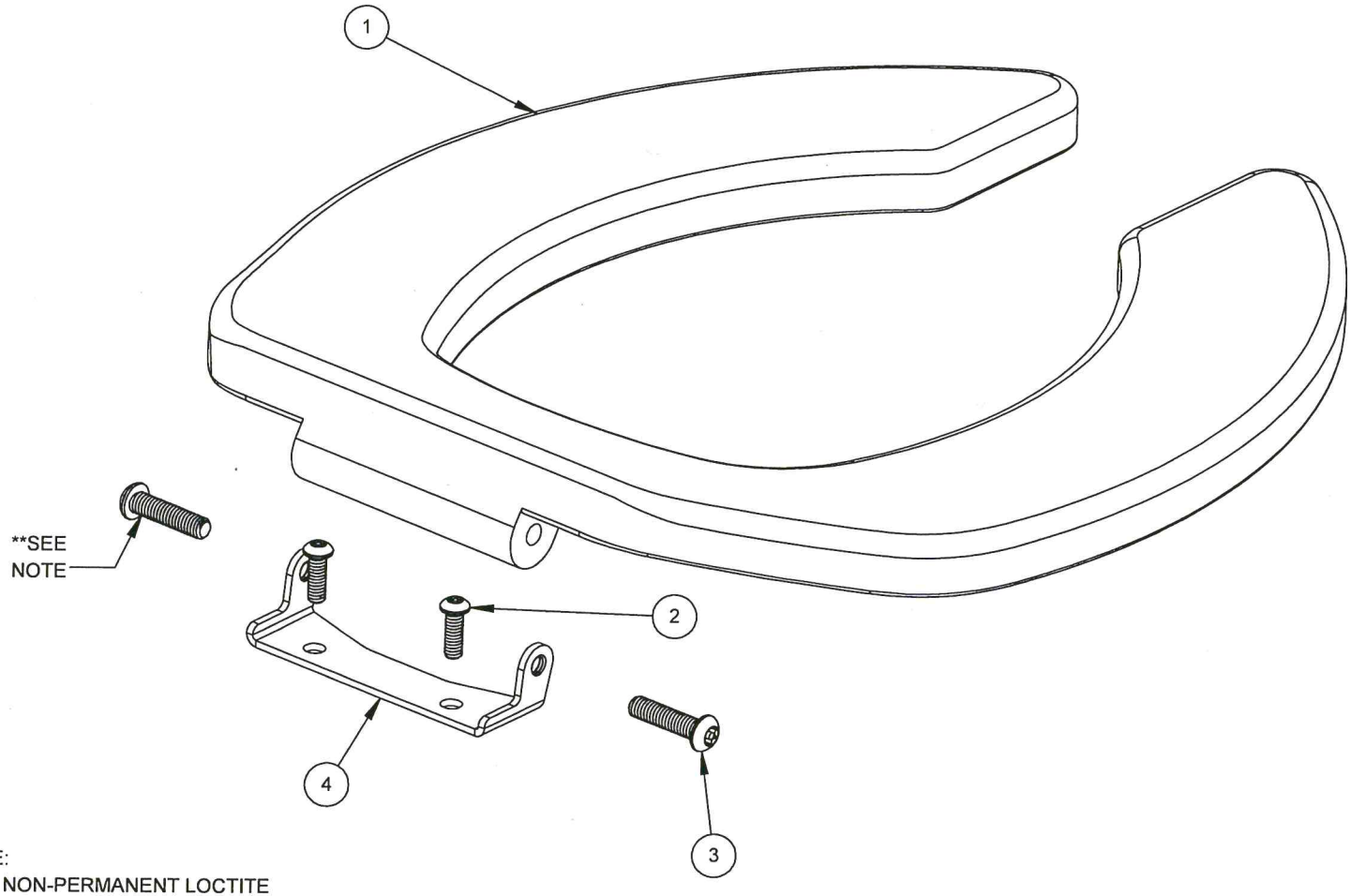

**NOTE:
APPLY NON-PERMANENT LOCTITE
WHEN INSTALLING THE 5/16 BOLTS. APPLY
THE LOCTITE AT THE BASE OF THREADS
CLOSEST TO THE BOLT HEAD.

ITEM #	PART #	DESCRIPTION	QTY.
1	380331	TOILET SEAT, 14x16, WHITE, STANDARD 1490	1
2	4502SSN	SCREW, 1/4-20 x 3/4 SECURITY SCREW (BH)	2
3	4518SSN	SCREW, SECURITY, BH, 5/16-18 x 1-1/4", SS, PIN-TORX	2
4	S101805	BRACKET, TOILET SEAT MOUNT, 955CT	1

WILLOUGHBY	Willoughby Industries, Inc. Indianapolis, Indiana	TITLE / DESC.: TOILET SEAT ASSEMBLY, WHITE, 1490				PART #: 800050
	TOLERANCES EXCEPT AS NOTED	2 PLCS: ±0.03 3 PLCS: ±0.0 FRACTIONS: ±1/2 ANGLE: ±1°	A	MAT'L: SEE BOM	REVISION: A	ORIG.: TF /15	STANDARD
			1:4	REF.:		REV.: N. /18	SHEET: 1 OF 1

Willoughby
Project # 40339 **Item #** P-2

WILLOUGHBY INDUSTRIES, INC.

Contractor Checklist for Lavatory and Drinking Fountains

This information must be received for order to be processed.
(Standard accessory locations shown on drawings will be used if no information is given).

- ❑ No information needed.

I have reviewed the submittal package for this fixture. I have verified that the information given with regards to the above questions is correct and this fixture is released for production.

Signature_____ Company_____ Date_____

Willoughby Industries - *Security Products*

WILLOUGHBY

HS-1014-96-HC-FA
Stainless Steel
18" Wide
Front Mounted
Handicap-ADA Compliant
Rectangular Bowl
Lavatory

P-2

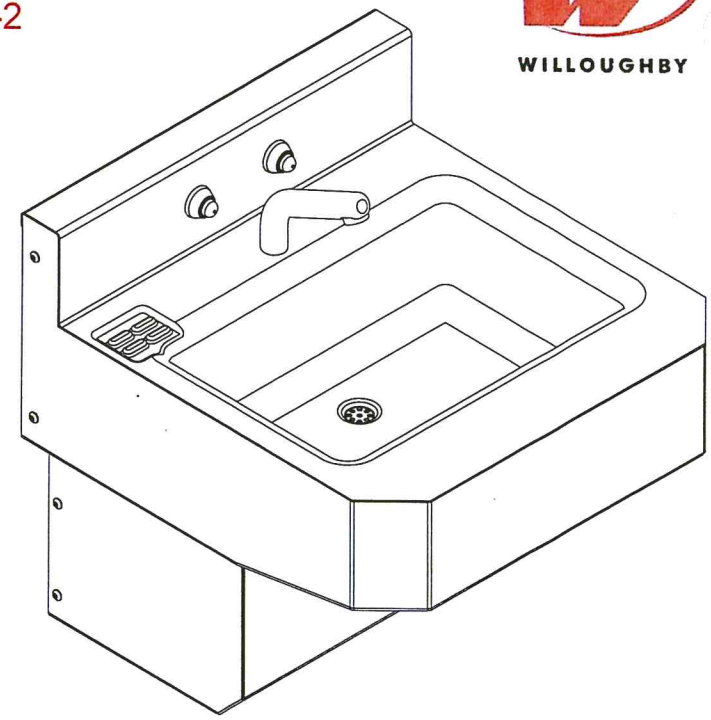

IN COMPLIANCE WITH A.D.A. 2010

(Unit may be shown with optional features)

To specify fixture and accessories, use the Model Number and Options page.

Example: To specify an 18" Wide, Front Mounted, Handicap-ADA Compliant, Rectangular Bowl Lavatory with dual temp. pneumatic metering valve, ligature-resistant pneumatic push buttons, deck mounted spout, standard removable 'p'-trap, and wall template

Use the following Willoughby Model Number:
HS-1014-96-HC-FA-PML2-PBH-DMS-RPT-MT

Recommended Specifications

Stainless Steel, 18" Wide, Front Mounted, Handicap-ADA Compliant, Rectangular Bowl Lavatory shall be:
Willoughby Model No. **HS-1014-96-HC-FA**
(Select from model number and options list on next page)

Fixture shall be fabricated from 14 GA., Type 304 stainless steel. The construction shall be all welded, with exposed stainless surfaces polished to a #4 satin finish.

Standard lavatory shall include:
- Rectangular-shaped bowl, 14-1/2" x 9-1/2" x 4-3/8" deep
- Fast drain with air vent
- (1-1/2") slip joint, cast brass union 'p' trap
- Removable bottom panel attached with vandal resistant screws
- Self-draining soap dish
- 0.5 GPM flow rate

Anchoring shall be from the front with 'z' clip, anchoring holes provided. Anchoring hardware by others. Unit requires no chase area for installation and maintenance.

Note: Only deck mounted Willoughby lavatory spouts and filler/bubblers are available with this lavatory model.

WARNING: Cancer and Reproductive Harm
- www.P65Warnings.ca.gov

visit our website at www.willoughby-ind.com
5105 West 78th Street • Indianapolis, IN. 46268
(317) 875-0830 • Fax: (317) 875-0837 • (800) 428-4065

MADE IN THE **U.S.A.**

© Rev. 1/2022

MODEL NUMBER AND OPTIONS:

1.) Base Model Number:

- ☑ HS-1014-96-HC-FA — Stainless Steel, 18" Wide, Front Mounted, Handicap-ADA Compliant, Rectangular Bowl Lavatory

2.) Spout/Bubbler Selection:

- ☑ DMS Deck Mounted Spout
- ☐ DMBH Ligature-resistant Deck Mounted Bubbler**

3.) Lavatory Valve Selection:

- ☐ NV No Valve (Select Hole Punching if needed)
- ☐ PML1 Single Temp. Pneumatic Metering
- ☑ PML2 Dual Temp. Pneumatic Metering
- ☐ E1L1 Single Temp. Electronic (pick control)*
- ☐ E1L2 Dual Temp. Electronic (pick control)*

4.) Lavatory Valve Actuation:

- ☑ PBH Ligature-resistant Pneumatic Push Buttons**
- ☐ PZPB Ligature-resistant Piezo Electronic Push Buttons**

5.) Electronic Controls* (Must Use Electronic Push Button):

N/A

- ☐ WUCC-3010 ☐ Pneutronic ☐ WMSII

(The WUCC-3010 Control can be used to pair a Lavatory with a Toilet)

6.) Hole Punching:

N/A

- ☐ 4CC 4" Centerset, Ø1-1/4" Holes (Specify 2 or 3 holes:___)
- ☐ 8CC 8" Centerset, Ø1-1/4" Holes (Specify 2 or 3 holes:___)
- ☐ 1CC Center Shank, (1) Ø1-1/4" Hole
- ☐ SP Special Punching (Specify hole punching dim.)

  SP: _____

7.) Lavatory Waste:

- ☑ RPT Removable 'P'-Trap (Standard)
- ☐ OV Lavatory Overflow
- ☐ SLOW Slow Drain

8.) Options:

- ☐ MT Wall Template
- ☐ TB1 Single Toothbrush Holder
  - ☐ Right ☐ Left
- ☐ TB2 Dual Toothbrush Holder
  - ☐ Right ☐ Left
- ☐ TF24H Hard-wired Transformer, 110VAC to 24VAC*
- ☐ TF24P Plug-in Transformer, 110VAC to 24VAC*
- ☐ TH1 Single Towel Hook
  - ☐ Right ☐ Left
- ☐ TH2 Dual Towel Hook
  - ☐ Right ☐ Left
- ☐ DC Decorator Color (Fixture exterior only - White)
- ☐ ISH Integral Shelf
- ☐ DFBH Ligature-resistant DM Drinking Fountian Bubbler**/***

  ***(Panel Mounted Push Button)
- ☐ Other: _____
- ☐ Other: _____

*(Req. 110V power through ground fault interrupter (GFCI) receptacle)

****LIGATURE-RESISTANT DISCLAIMER**

This product is designed to minimize ligature points. While every effort has been made to reduce the possibility of ligature points, this product does not eliminate all risks. Ligature-Resistant products by Willoughby Industries are to be used in conjunction with, not as a replacement for, trained professionals.

Approved For Manufacturing By: _____ Date: _____ Company: _____

Wall Thickness: _____ Wall Type: _____

VERIFY ALL DIMENSIONS WITH FACTORY PRIOR TO ROUGH-IN

WILLOUGHBY RESERVES THE RIGHT TO MAKE CHANGES IN DESIGN AND DIMENSIONS WITHOUT FORMAL NOTICE AND WITHOUT INCURRING OBLIGATION.

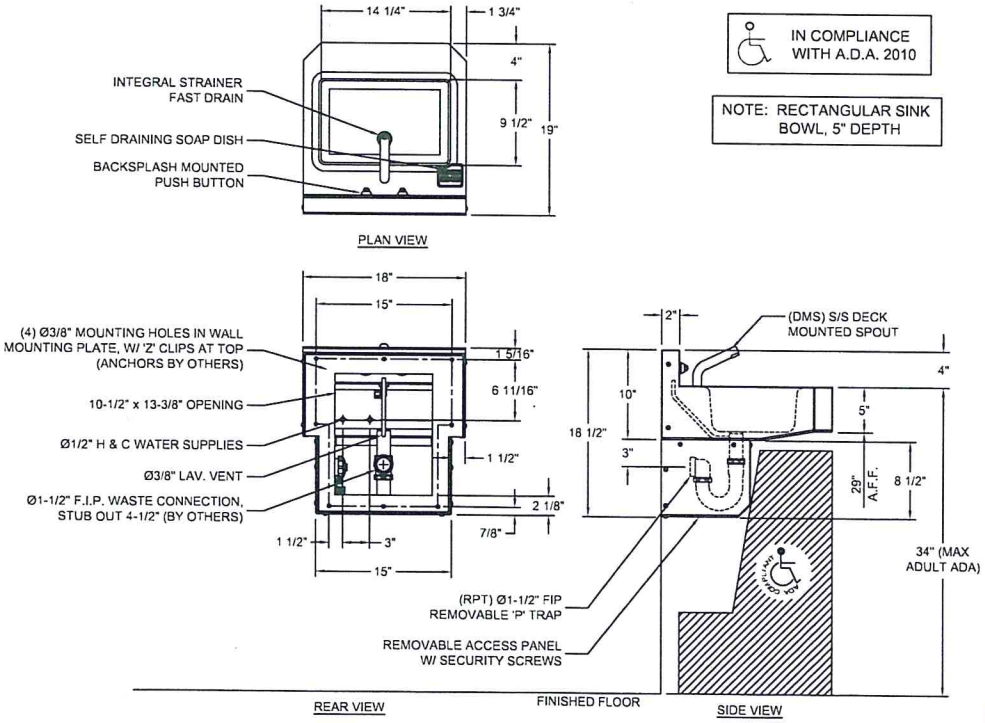

IN COMPLIANCE WITH A.D.A. 2010

NOTE: RECTANGULAR SINK BOWL, 5" DEPTH

visit our website at www.willoughby-ind.com

5105 West 78th Street • Indianapolis, IN. 46268

(317) 875-0830 • Fax: (317) 875-0837 • (800) 428-4065

MADE IN THE **U.S.A.**

© Rev. 1/2022

TAG: P-2

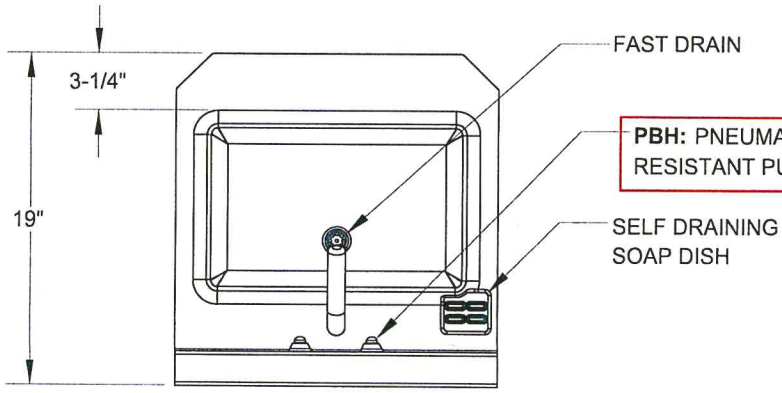

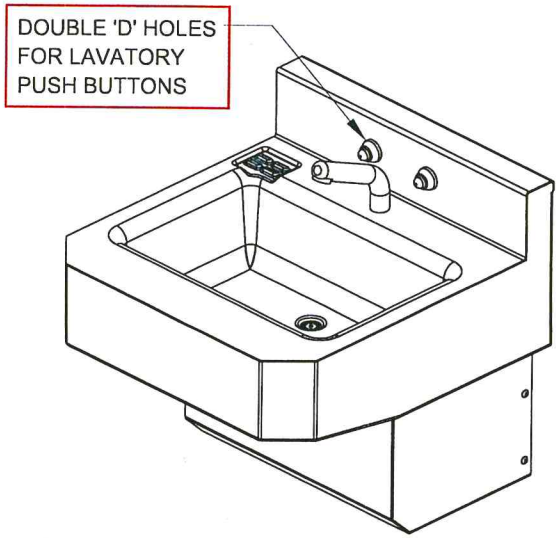

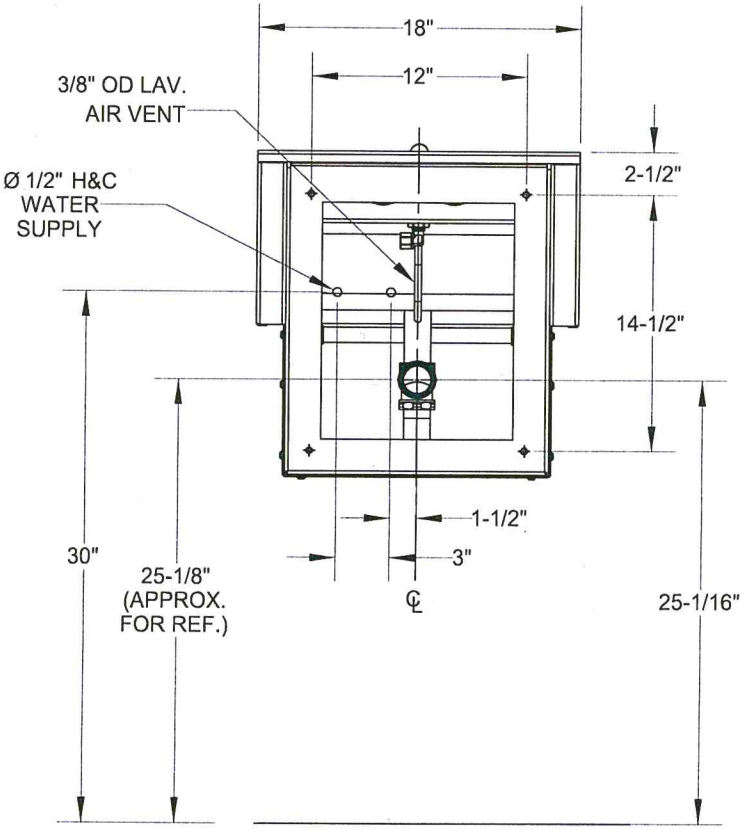

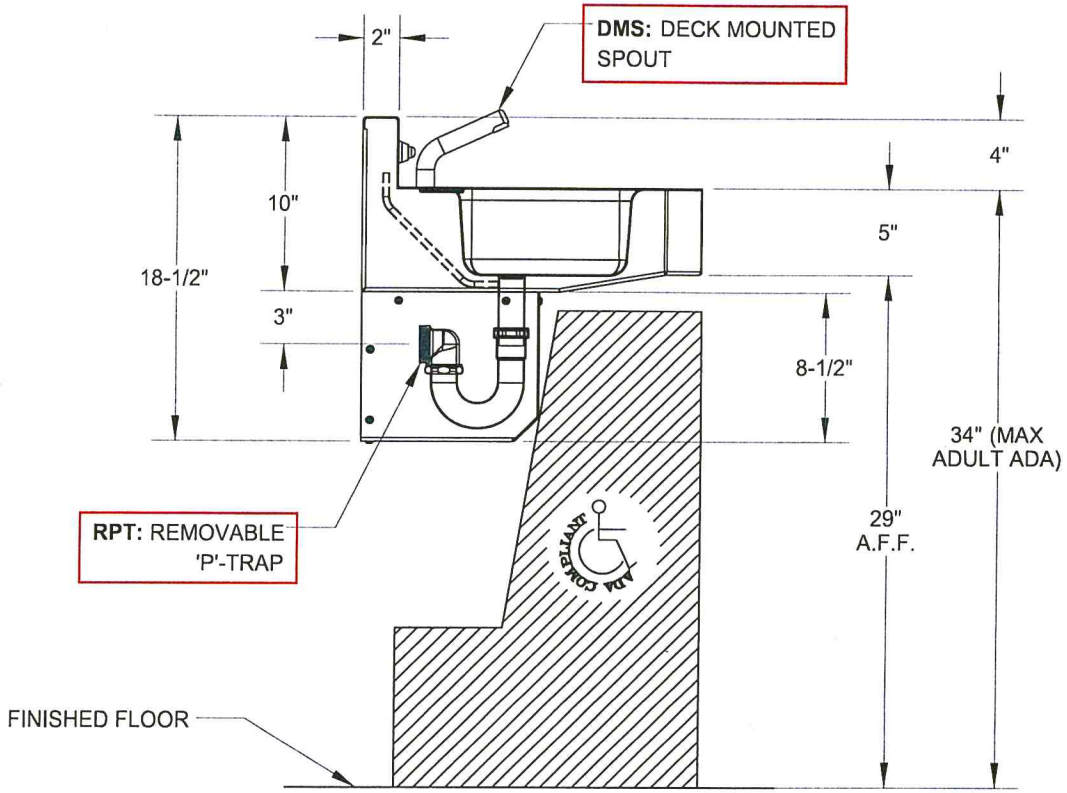

Willoughby Industries, Inc. Indianapolis, Indiana	TITLE / DESC.: HS-1014-96-HC-FA LAVATORY ASSEMBLY, HS-1014-96-HC-FA-DMS-PML2-PBH-RPT				PART #: L1014-0426
TOLERANCES EXCEPT AS NOTED: 2 PLCS: ±0.03; 3 PLCS: ±0.01; FRACTIONS: ±1/32"; ANGLE: ±1°	A	MAT'L: 14 GA 304 S/S #3 SATIN FINISH	REVISION: A	ORIG.	/21/19	STANDARD
	1:1	REF.: L1014-0-0408		REV.: WDB 5/21/19	SHEET: 1 OF 1

TITLE:	DRAWING #:
DECK MOUNTED SPOUT MODEL SUFFIX "DMS"	P9[illegible]071A

DIMENSIONS ARE +/- 1/4" EXCEPT AS NOTED	MATERIAL: TYPE 304 S/S	DRAWN BY: R.T.S.	DATE: 12/15/98	REV. #: J 10/6/21	STANDARD DWG.
		SCALE: NONE			

WILLOUGHBY

STANDARD DECK SPOUT
(# 320424 INCLUDES # 320157A)

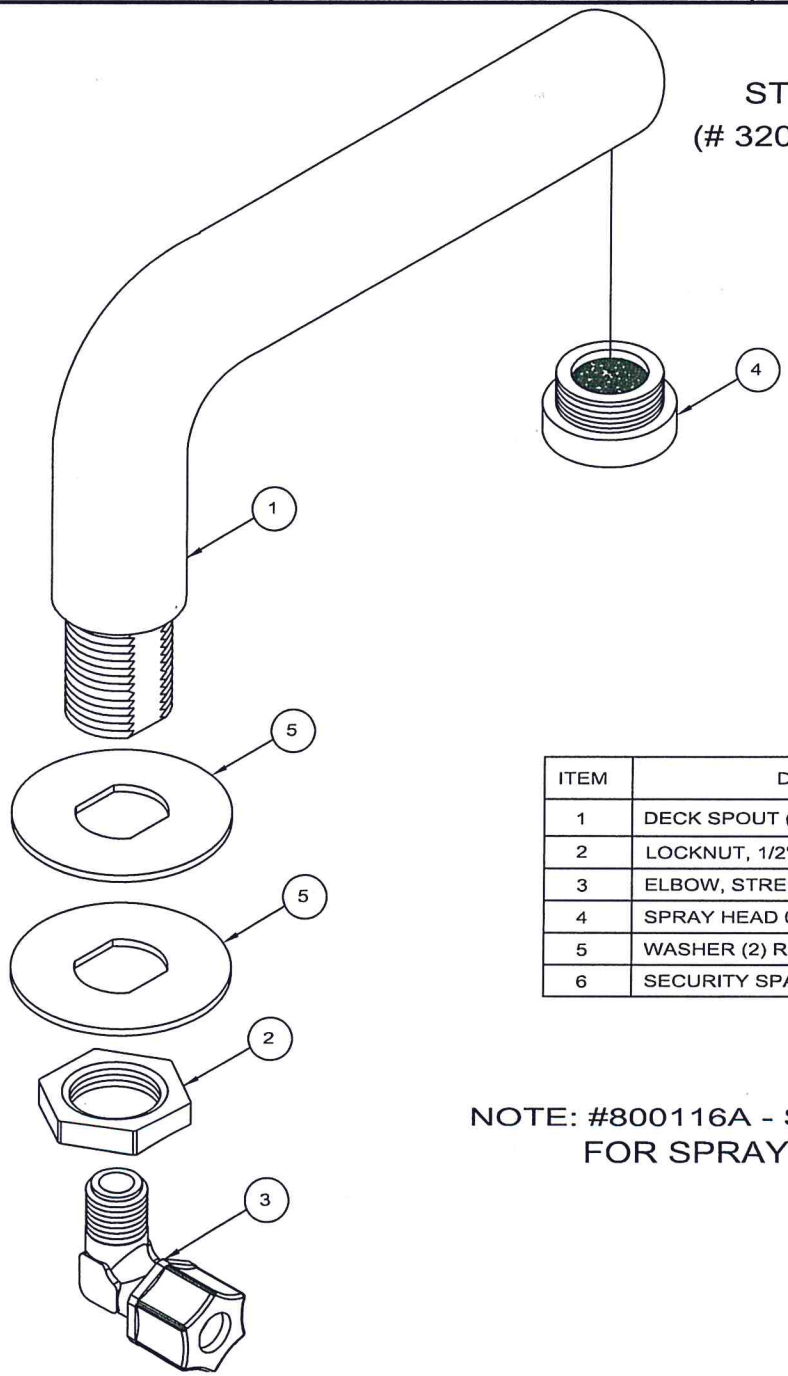

ITEM	DESCRIPTION	PART #
1	DECK SPOUT (COMES WITH 320157A)	320424
2	LOCKNUT, 1/2" BRASS PIPE	320312
3	ELBOW, STREET 3/8" FPT x 1/4" MPT	320579
4	SPRAY HEAD 0.5 GPM	320157A
5	WASHER (2) REQUIRED	S300872
6	SECURITY SPANNER TOOL FOR SPRAY HEAD	800116A

NOTE: #800116A - SECURITY SPANNER TOOL
FOR SPRAY HEAD NOT SHOWN

Willoughby Industries - *Security Products*

WILLOUGHBY

PML2 / PSL2 Dual Temperature Lead-free Pneumatic Valve

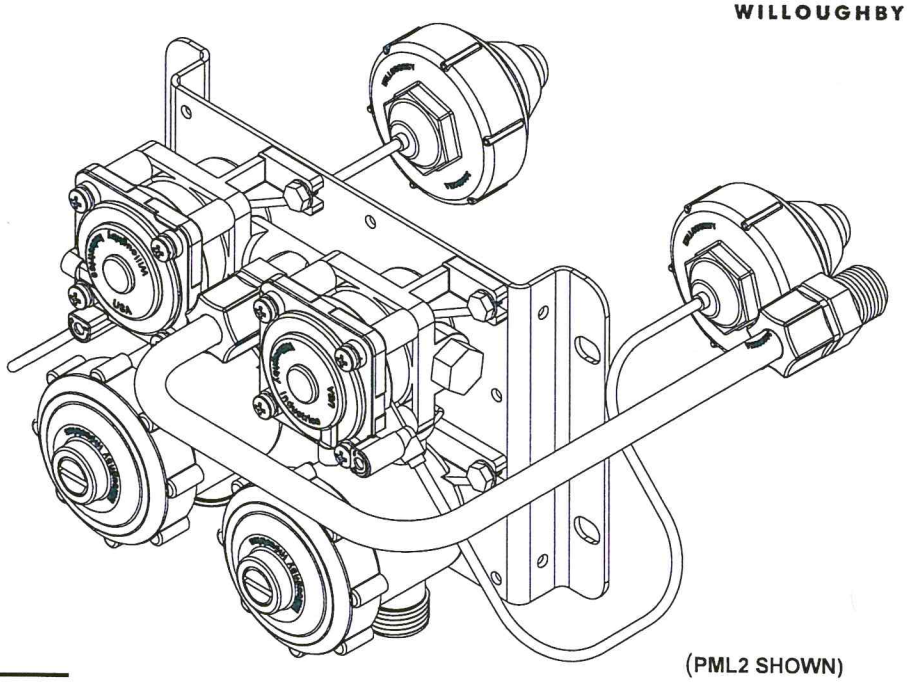

(PML2 SHOWN)

Recommended Specifications

Dual Temperature, Lead-free Pneumatic Valve assembly shall be: Willoughby Model No. **P__L2** (Select from options list)

The valve assembly shall use diaphragms to pneumatically activate non-hold open metering (5-90 second) or non-metering pneumatic valves. The vandal-resistant push buttons shall be keyed/non-removable from the front of the fixture and shall require less than 5 lbs of force to operate.

The plastic valve checkstop/strainer shall feature integral mounting points. Replaceable stainless steel strainer and optional 0.5 GPM flow control can be serviced without disturbing the supply line. Assembly shall use flexible tubing to connect to the filler/bubbler/shower head. Water inlet is 1/2" MPT and is reversible for either top or bottom supply. A galvanized wall mounting plate is provided, wall anchoring hardware provided by others.

Flexible tubing is supplied for walls up to 8" thick. Recommended operating pressure shall be 35-70 psi. Valve shall withstand pressures up to 90 psi. The maximum length for tubing between the push button actuator and the valve is 10 feet. The pneumatic system is entirely self-contained and shall require no outside air supply. Cost reducing manifolded valves shall consist of multiple valve assemblies served by a common supply line. Valve complies with NSF-61 standard.

* This is not a substitute for a thermostatic mixing valve. The delivered water temperature is the result of the two combined inlet temperatures and cannot be adjusted by this valve assembly. The hot side of the valve must be supplied with tempered water.

***LIGATURE-RESISTANT DISCLAIMER**
This product is designed to minimize ligature points. While every effort has been made to reduce the possibility of ligature points, this product does not eliminate all risks. Ligature-Resistant products by Willoughby Industries are to be used in conjunction with, not as a replacement for, trained professionals.

Model Number:

- ☑ PML2 — Dual Temp. Metering
- ☐ PSL2 — Dual Temp. Non-metering

Flow Selection (choose one):

- ☐ 0.5 GPM Flow (lavatories)
- ☐ 1.5 GPM Flow (showers)
- ☐ 2.0 GPM Flow (showers)
- ☑ NFC (No Flow Control) (showers, up to MA2)

Push Button:

- ☑ PBH — Ligature-resistant Pneumatic Push Button*
- ☐ PLPB — Pneumatic Palm Push Button

Options:

- ☐ -MA2 (Double Manifold, No flow limitation)
- ☐ -MA3 (Triple Manifold, 0.5 GPM flow only)
- ☐ -MA4 (Quad Manifold, 0.5 GPM flow only)
- ☐ -TMV — In-line Thermostatic Mixing Valve

WARNING: Cancer and Reproductive Harm
- www.P65Warnings.ca.gov

visit our website at www.willoughby-ind.com
5105 West 78th Street • Indianapolis, IN. 46268
(317) 875-0830 • Fax: (317) 875-0837 • (800) 428-4065

MADE IN THE **U.S.A.**

© Rev. 8/2021

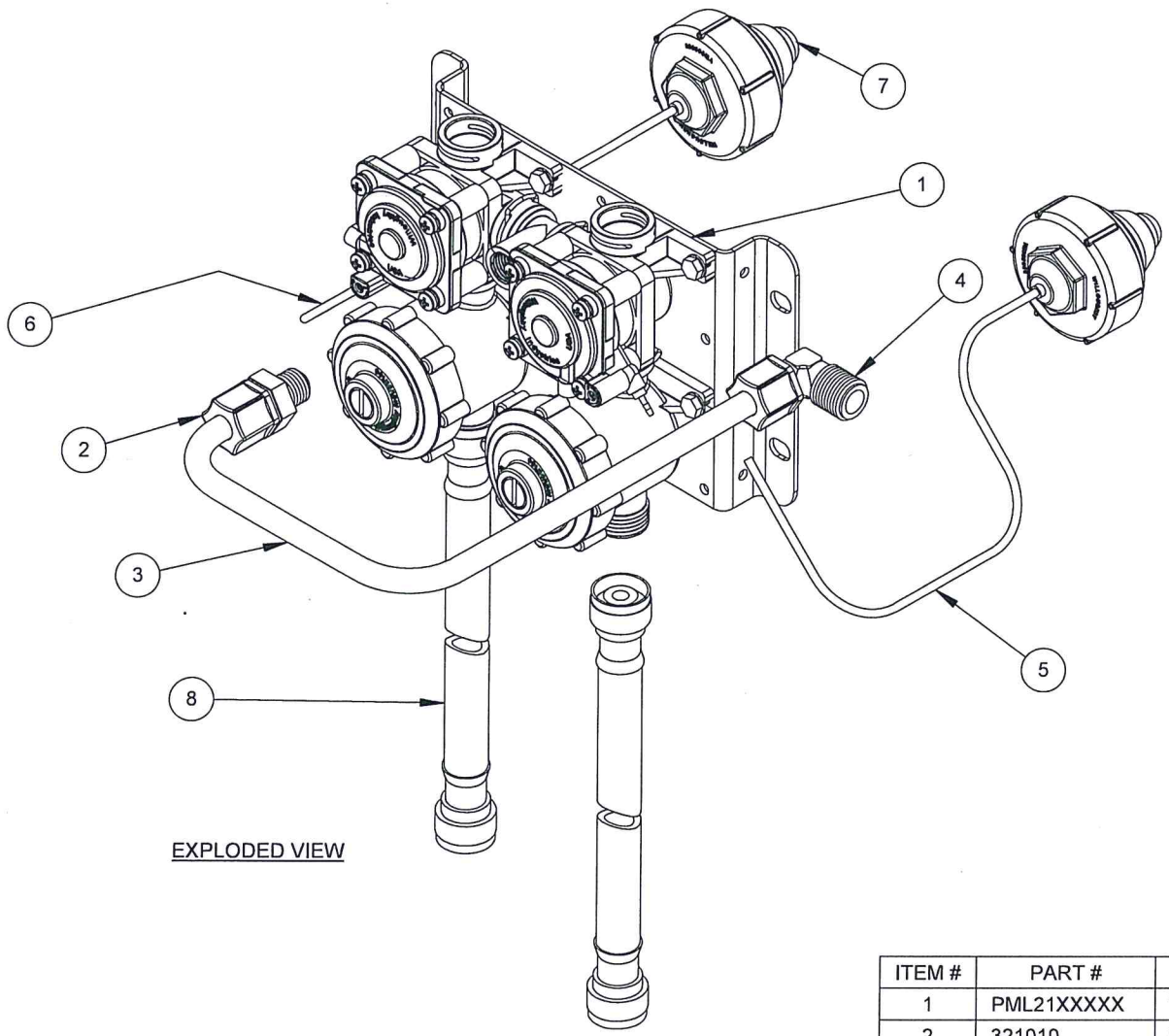

EXPLODED VIEW

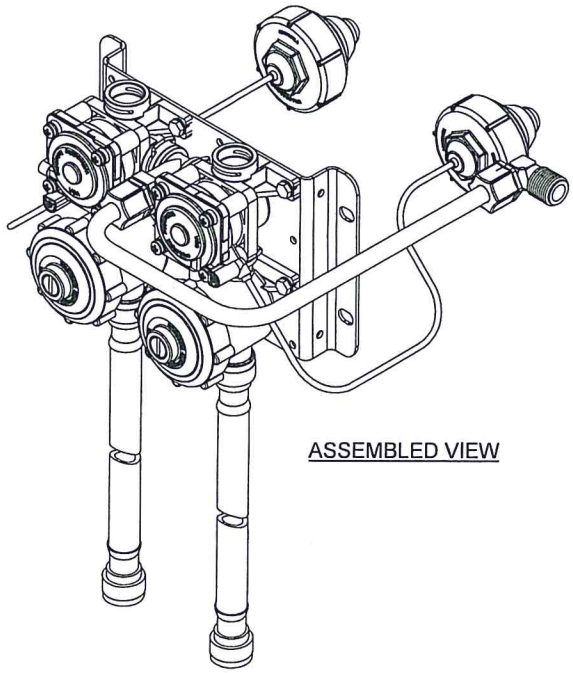

ASSEMBLED VIEW

ITEM #	PART #	DESCRIPTION	QTY.
1	PML21XXXXX	VALVE ASSY PNEU. METERING-DUAL TEMP-NFC-LEAD FREE	1
2	321010	3/8" TUBE x 1/4" MPT CONNECTOR	1
3	600523	FLEXIBLE TUBING 3/8"OD X 1/4"ID	1
4	320577	90 ELBOW, 3/8 MPT X 3/8 TUBE	1
5	600475	PNEUMATIC TUBING 1/16"ID (BLUE)	1
6	600470	PNEUMATIC TUBING 1/16"ID (RED)	1
7	600306LR	(PBH) LIGATURE-RESISTANT PNEUMATIC PUSH BUTTON	2
8	980520	20" FLEX HOSE, 1/2 F.I.P CONNECTION	2

WILLOUGHBY

Willoughby Industries Inc.
Indianapolis, Indiana

TOLERANCES EXCEPT AS NOTED
2 PLCS: ±0.03
3 PLCS: ±0.015
FRACTIONS: ±1/32"
ANGLE: ±1°

SIZE: A
SCALE: 1:8

TITLE / DESC.: VALVE ASSY PNEU. METERING-DUAL TEMP-NFC-LEAD FREE

PART #: PML21XXG0E

MAT'L: N/A
REF.:

REVISION: A

ORIG.: EEF 2/2/15
REV.: EEF 5/24/17

STANDARD

SHEET: 1 OF 1

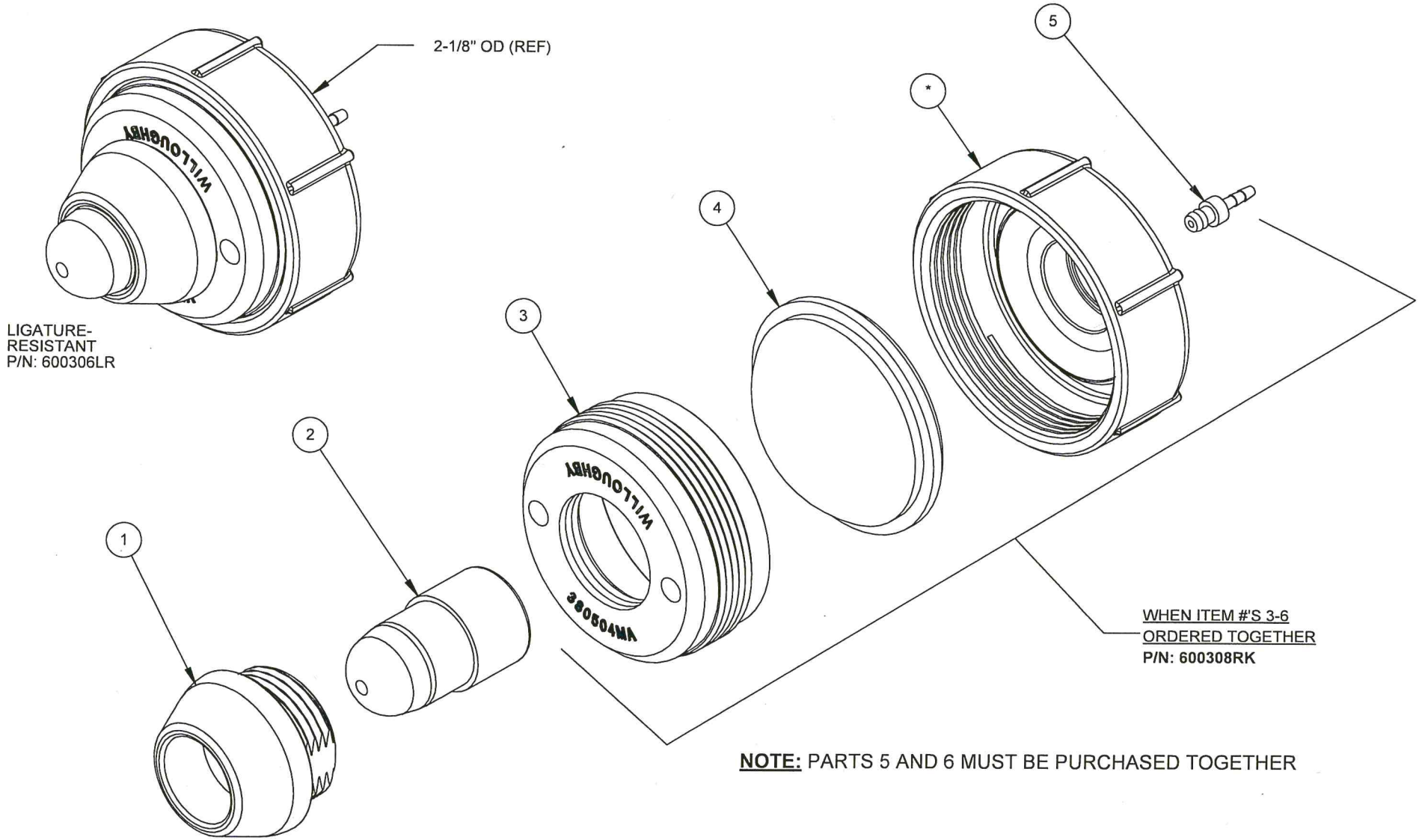

NOTE: PARTS 5 AND 6 MUST BE PURCHASED TOGETHER

ITEM #	PART #	DESCRIPTION	QTY.
1	380119	PUSHBUTTON SLEEVE, LIGATURE-RESISTANT DIAPH. PUMP	1
2	600046	PUSHBUTTON, LIGATURE-RESISTANT DIAPHRAGM PUMP	1
3	380504MA	CAP, DIAPHRAGM PUMP, MOLDED	1
4	600201	DIAPHRAGM, PNEUMATIC PUMP	1
5	380840	FITTING, HOSE BARB, PUSH-IN, 1/16" (BRASS)	1

WILLOUGHBY	Willoughby Industries, Inc. Indianapolis, Indiana	TITLE / DESC.: (PBH) LIGATURE-RESISTANT PNEUMATIC PUSH BUTTON	PART #: 600306LR
TOLERANCES EXCEPT AS NOTED	2 PLCS: 0.03 3 PLCS: 0.01 FRACTIONS: 1/32 ANGLE: 1	MAT'L: AS NOTED, SEE BOM REF.:	REVISION: A ORIG.: EF '17 REV.: N/ /21
			STANDARD SHEET: 1 OF 1

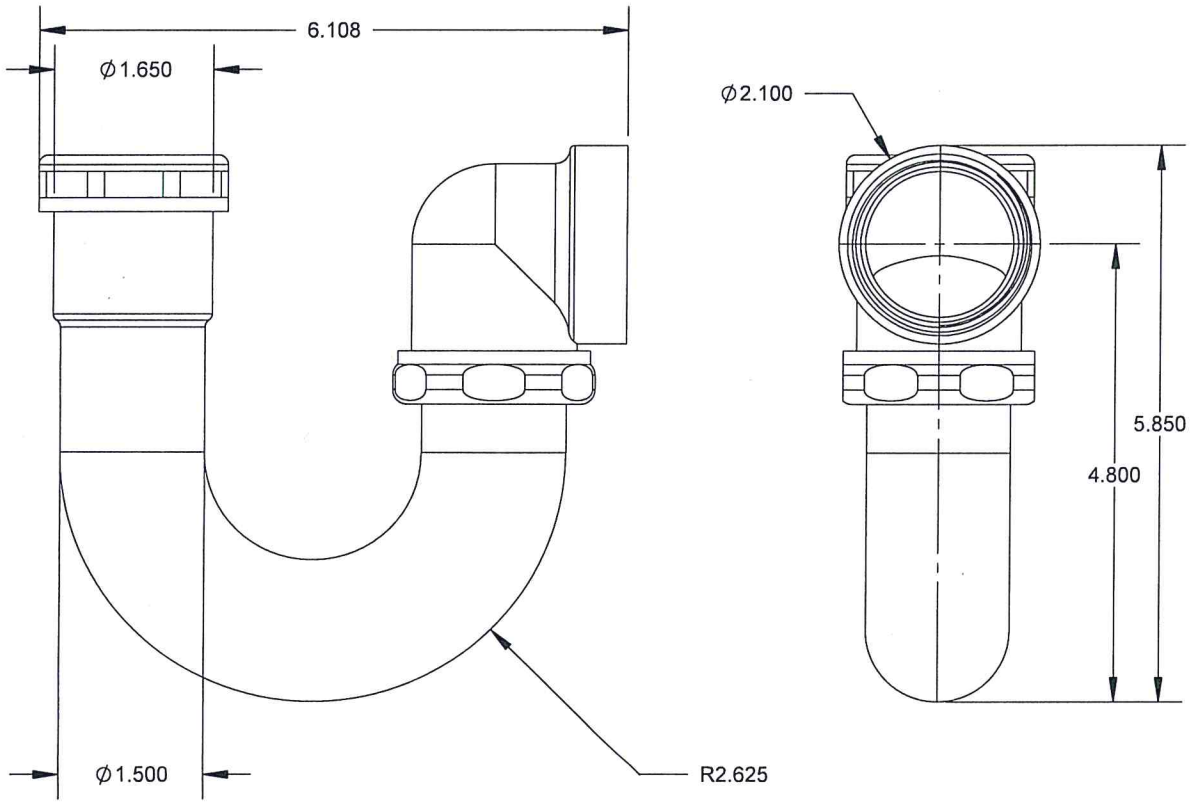

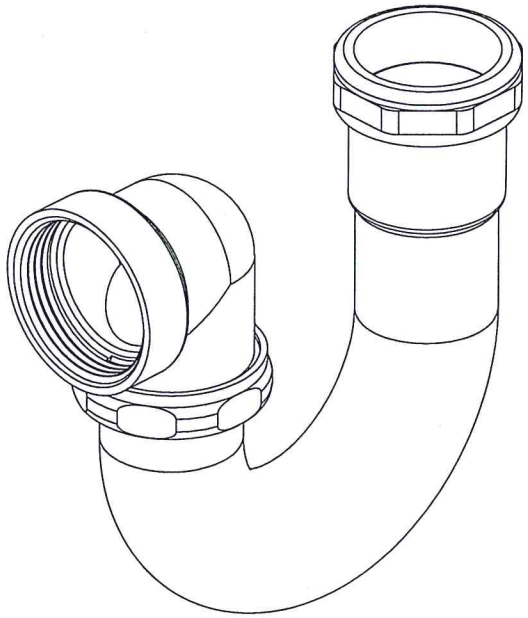

WILLOUGHBY	**Willoughby Industries, Inc.** Indianapolis, Indiana		TITLE / DESC.	RPT- REMOVABLE P-TRAP P-TRAP, 1-1/2 O.D, 17GA, CHROME, W/FIP ELBOW				PART #: 380286
	TOLERANCES EXCEPT AS NOTED	2 PLCS: ±0.03 3 PLCS: ±0.015 FRACTIONS: ±1/32" ANGLE: ±1°	SIZE: A	MAT'L: CHROME-PLATED BRASS	REVISION: A	ORIG. TRB 7/23/14		STANDARD
			SCALE: 1:2	REF.:		REV. TRB 7/23/14		SHEET: 1 OF 1

Willoughby
Project # 40339 **Item #** P-3

WILLOUGHBY INDUSTRIES, INC.

Contractor Checklist for Cabinet Showers

This information must be received for order to be processed.
(Standard accessory locations shown on drawings will be used if no information is given).

- ❑ Specify showerhead/push button orientation and finish schedule:

I have reviewed the submittal package for this fixture. I have verified that the information given with regards to the above questions is correct and this fixture is released for production.

Signature_____ Company_____ Date_____

Willoughby Industries - *Security Products*

WILLOUGHBY

Front Access Cabinet Shower

P-3

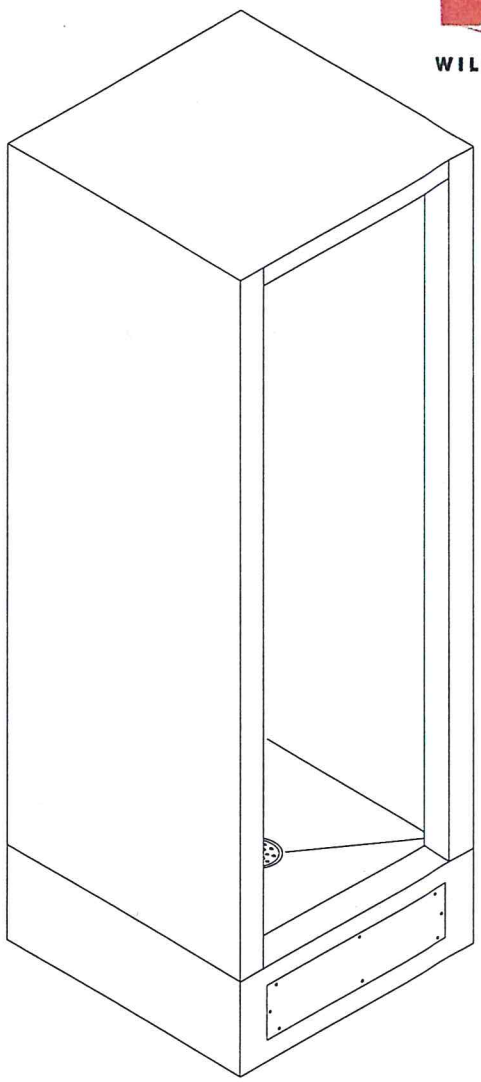

Recommended Specifications

Front Access Cabinet Shower shall be:
Willoughby Model No. ___**S-**____**-FA**
(Select from model number and options list on next page)

Shower cabinet shall be fabricated from 14 gauge, Type 304 stainless steel. Shower floor shall be fabricated from 11 gauge, Type 304 stainless steel. The construction shall be ***all-welded*** (unitized models only, not applicable to knockdown models), exposed stainless surfaces polished to a #4 satin finish, except shower floor which shall have a non-slip glass blast finish.

Standard equipment shall include:
- (NPS) non-adjustable penal shower head, mounted in a corner panel (plumbed to a top supply connection)
- (NHD) No-hub drain with removable strainer

Unit requires no chase area for installation and maintenance. Drain connection shall be through removable front access cover. Shower head and push button shall be mounted in a side mullion.

Underside of shower floor shall be sound deadened with fire resistant material.

Please provide shower finish schedule upon ordering.
(Unit may be shown with optional features)

To specify fixture and accessories, use the Model Number and Options page.

Example: To specify a unitized 36" x 36" Front Access Cabinet Shower with left hand shower head/valving, back wall with polished front, single temp. pneumatic metering valve, standard ligature-resistant pneumatic push button, 2.5 GPM flow rate, standard non-adjustable penal shower head and standard no-hub drain

Use the following Willoughby Model Number:
US-3636-FA-L-A4-PML1-PBH-2.5GPM-NPS-NHD

To specify Knockdown Cabinet Shower: Select the "KS" model number from the list on the Model Number and Options page.

It is highly recommended that a floor drain be utilized at or near the shower entrance. The floor drain is to be provided by others.

Optional WaterSense Labeled ligature-resistant shower head available (LRSH).

WARNING: Cancer and Reproductive Harm
- www.P65Warnings.ca.gov

visit our website at www.willoughby-ind.com
5105 West 78th Street • Indianapolis, IN. 46268
(317) 875-0830 • Fax: (317) 875-0837 • (800) 428-4065

MADE IN THE U.S.A.

© Rev. 8/2021

MODEL NUMBER AND OPTIONS:

1.) Base Model Number:

Unitized Front Access Cabinet Showers:

- ☐ US-3030-FA — 30"L x 30"W Cabinet Shower
- ☐ US-3232-FA — 32"L x 32"W Cabinet Shower
- ☑ US-3636-FA — 36"L x 36"W Cabinet Shower

Knockdown Front Access Cabinet Showers:

- ☐ KS-3030-FA — 30"L x 30"W Cabinet Shower
- ☐ KS-3232-FA — 32"L x 32"W Cabinet Shower
- ☐ KS-3636-FA — 36"L x 36"W Cabinet Shower

2.) Shower Head/Push Button Orientation: SPECIFY

- ☐ L — Left Hand
- ☐ R — Right Hand

3.) Cabinet Side Exterior Finish Schedule:

(Based on Chase Wall Orientation; see the Options Pages at the end of Catalog Section for diagram)

For (BCS) Back Wall:

- ☐ A1 — Polished Front, Left Side, & Right Side
- ☐ A2 — Polished Front & Right Side
- ☐ A3 — Polished Front & Left Side
- ☐ A4 — Polished Front only

For (LCS) Left Wall:

- ☐ B1 — Polished Front, Back Side, & Right Side
- ☐ B2 — Polished Front & Right Side
- ☐ B3 — Polished Front only

For (RCS) Right Wall:

- ☐ C1 — Polished Front, Back Side, & Left Side
- ☐ C2 — Polished Front & Left Side
- ☐ C3 — Polished Front only

4.) Valve Selection:

- ☐ NV — No Valve
- ☑ PML1 — Single Temp. Pneumatic Metering Ⓢ Ⓛ
- ☐ PML2 — Dual Temp. Pneumatic Metering Ⓢ Ⓛ
- ☐ E1L1 — Single Temp. Electronic (Pick Control)* Ⓢ Ⓛ
- ☐ E1L2 — Dual Temp. Electronic (Pick Control)* Ⓢ Ⓛ
- ☐ PBV — Pressure-Balancing Mixing Valve
- ☐ TPV — Temp/Pressure-Balancing Mixing Valve
- ☐ TPLR — Ligature-resistant Temp/Pressure-Balancing Mixing Valve Ⓛ

Valve Manifold Option:

Pneumatic or Electronic Valves Only:

(See the Manifold Option Page at the end of Catalog Section S5 for further information)

- ☐ MA2

5.) Push Button Selection:

Pneumatic or Electronic Valves Only:

- ☑ PBH — Ligature-resistant Pneumatic Push Buttons Ⓢ Ⓛ
- ☐ PZPB — Ligature-resistant Piezo Electronic Push Buttons* Ⓢ Ⓛ

6.) Flow Rates:

- ☐ 2.5 GPM (Standard)
- ☐ 2.0 GPM
- ☑ 1.5 GPM

7.) Electronic Controls*

(Must Use Electronic Push Button):

- ☐ WUSC-2200 ☐ WUSC-2400
- ☐ Pneutronic ☐ WMS II

8.) Shower Head Selection:

- ☑ NPS — Non-adjustable Penal Shower Head (Standard) Ⓢ
- ☐ APS — Adjustable Penal Shower Head
- ☐ CSH — Ligature-resistant Shower Head Ⓢ Ⓛ
- ☐ LRSH — Ligature-resistant Shower Head, WaterSense Labeled, 2.0 GPM Max Flow Rate Ⓛ

9.) Drain Selection:

- ☑ NHD — No-hub Cabinet Shower Drain (2") (Standard)
- ☐ ICD — Inside Caulk Cabinet Shower Drain (2")

10.) Options:

- ☐ VG — Ventilation Grille (Specify Free Area and Location; Standard Grille Dimensions: 8-3/4" x 8-3/4" with 15-3/4 in² open area)
- ☐ CP — Closure Panels (Specify Dimensions and Locations)
- ☐ STC — Sloping Top Closure
- ☐ MD__ — Modesty Door
  - ☐ L — Hinged Left
  - ☐ R — Hinged Right
- ☐ CR — Curtain Rod
- ☐ TH1 — Release Towel Hook Ⓢ Ⓛ
- ☑ RD — Recessed Mounted Soap Dish Ⓢ Ⓛ
- ☐ SD — Surface Mounted Soap Dish
- ☐ ZC — 'Z'-Clip Floor Mounting
- ☐ TMV — In-line Thermostatic Mixing Valve
- ☐ TF24H — Hard-wired Transformer, 110VAC to 24VAC*
- ☐ TF24P — Plug-in Transformer, 110VAC to 24VAC*
- ☐ LRD5 — 5" Ligature-resistant Drain Cover Ⓛ
- ☐ Other _____
- ☐ Other _____

*(Req. 110V power through ground fault interrupter (GFCI) receptacle)

Ⓢ For security applications

Ⓛ Ligature-resistant option**

****LIGATURE-RESISTANT DISCLAIMER**

This product is designed to minimize ligature points. While every effort has been made to reduce the possibility of ligature points, this product does not eliminate all risks. Ligature-Resistant products by Willoughby Industries are to be used in conjunction with, not as a replacement for, trained professionals.

Approved For Manufacturing By: _____ Date: _____ Company: _____

Wall Thickness: _____ Wall Type: _____

STANDARD MODELS				SIZE	DRAIN
✓	UNITIZED	✓	KNOCK DOWN	A-B	C
	US-3030-FA		KS-3030-FA	30"	15"
	US-3232-FA		KS-3232-FA	32"	16"
	US-3636-FA		KS-3636-FA	36"	18"

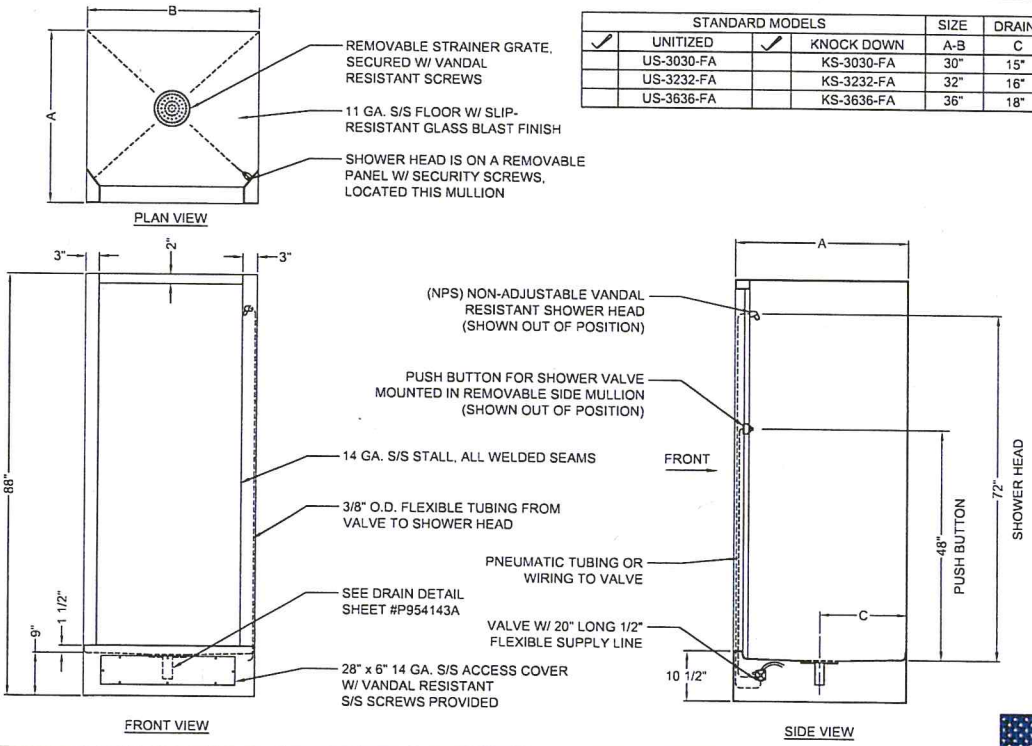

VERIFY ALL DIMENSIONS WITH FACTORY PRIOR TO ROUGH-IN

WILLOUGHBY RESERVES THE RIGHT TO MAKE CHANGES IN DESIGN AND DIMENSIONS WITHOUT FORMAL NOTICE AND WITHOUT INCURRING OBLIGATION.

visit our website at www.willoughby-ind.com

5105 West 78th Street • Indianapolis, IN. 46268

(317) 875-0830 • Fax: (317) 875-0837 • (800) 428-4065

MADE IN THE **U.S.A.**

© Rev. 8/2021

TAG: P-3

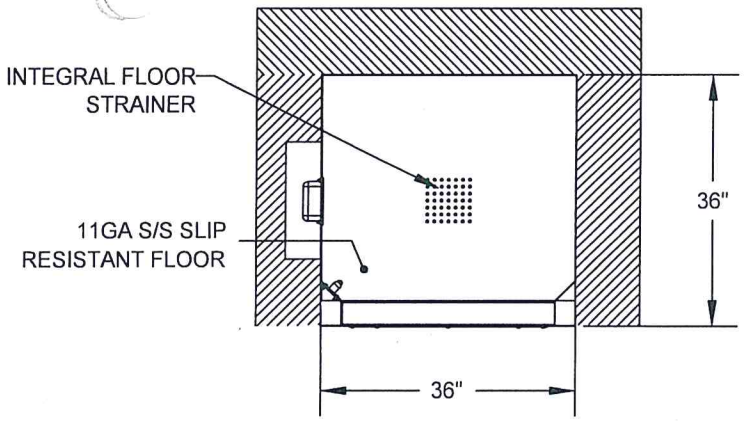

PML1 NHD
1.5 GPM *B3
NPS PBH
RD

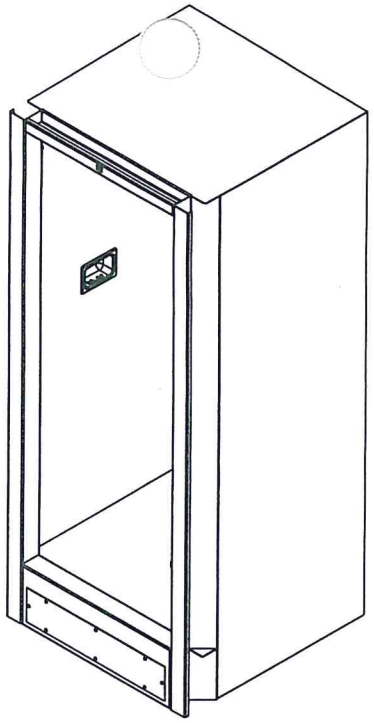

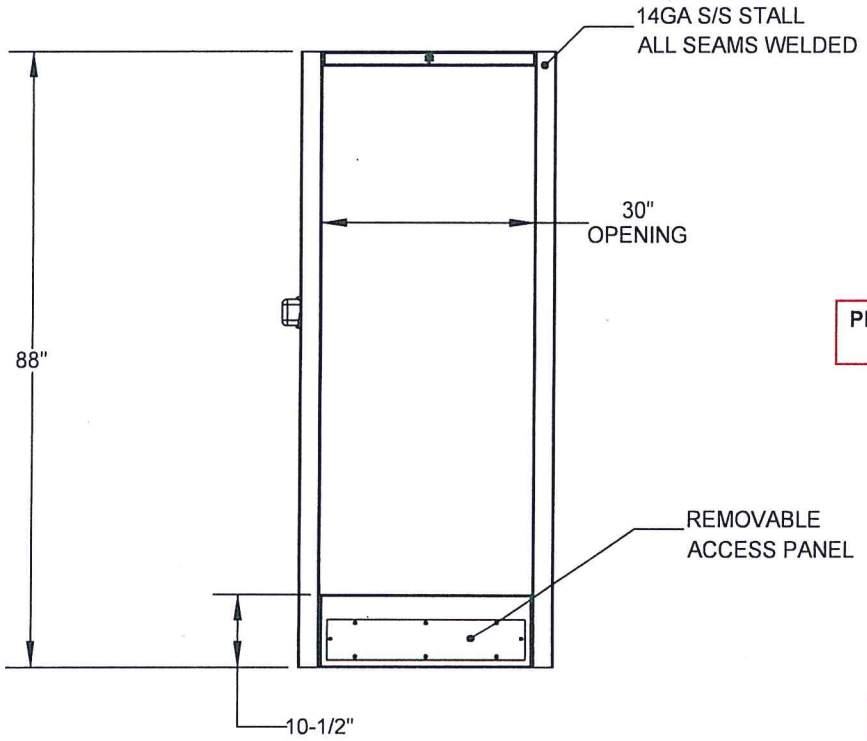

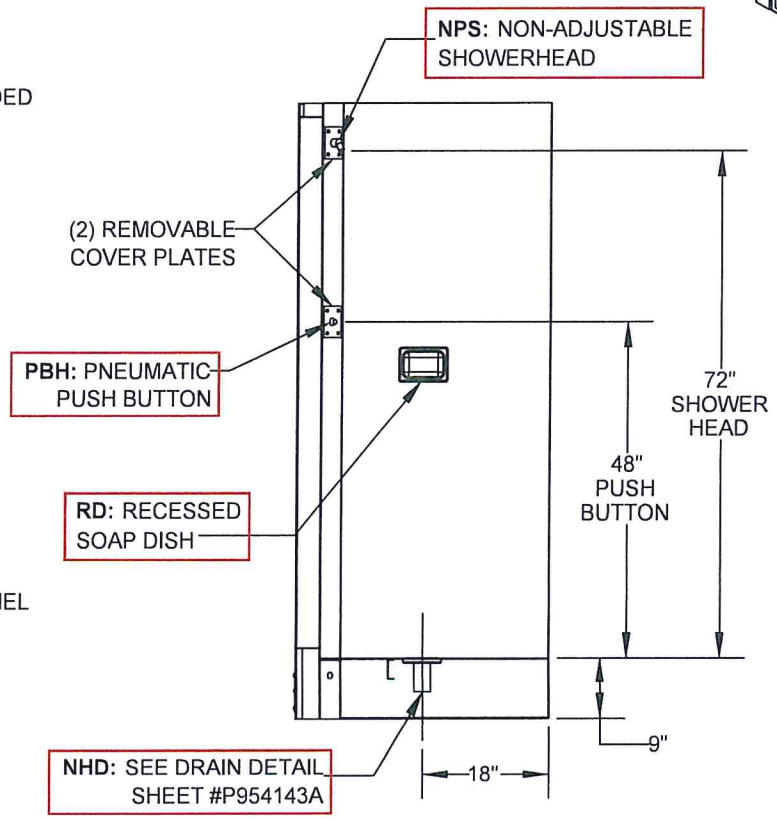

*NOTE:
SEE FINISH SCHEDULE
PRINT # P954052A

Willoughby Industries, Inc. Indianapolis, Indiana	TITLE / DESC.: SHOWER, US-3636-FA SHOWER, US-3636-FA-L-B3-PML1-PBH-1.5-NPS-NHD-RD				PART #: P224597A
TOLERANCES EXCEPT AS NOTED	2 PLCS: ±0.03 3 PLCS: ±0.015 FRACTIONS: ±1/32" ANGLE: ±1°	SIZE: A	MAT'L: 14 GA 304 SS #3 SATIN FINISH, SEE BOM	REVISION: A	ORIG.: MCL 7/6/22 STANDARD
		SCALE: 1:64	REF.: S3636-1112		REV.: MCL 7/6/22 SHEET: 1 OF 1

WILLOUGHBY	TITLE: SHOWER FINISH SCHEDULE				DRAWING #: P954052A	
	DIMENSIONS ARE +/- 1/4" EXCEPT AS NOTED	MATERIAL: N/A	DRAWN BY: E.L.G.	DATE: 6/02/95	REV. #: G 9/8/15	STANDARD DWG.
			SCALE: NONE			

BACK CHASE:

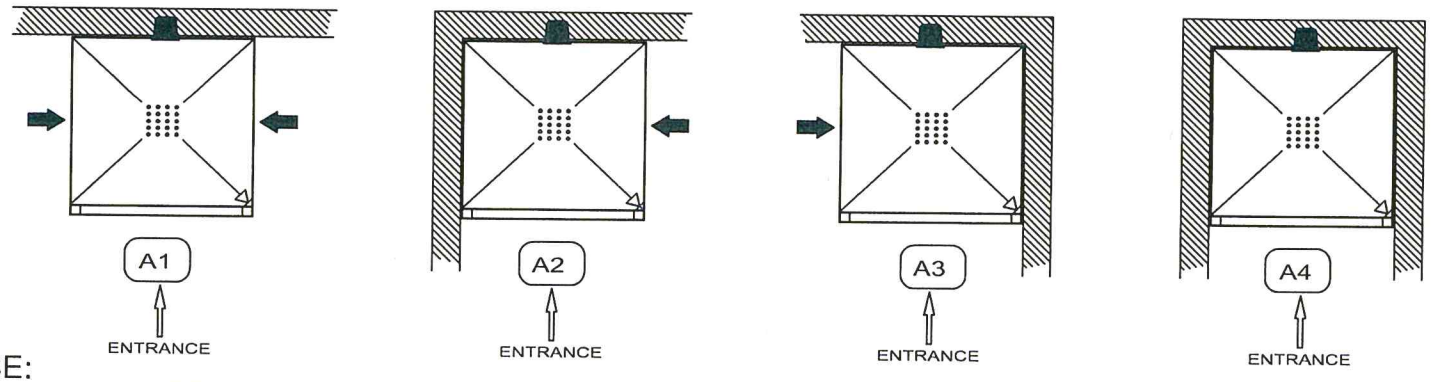

LEFT HAND CHASE:

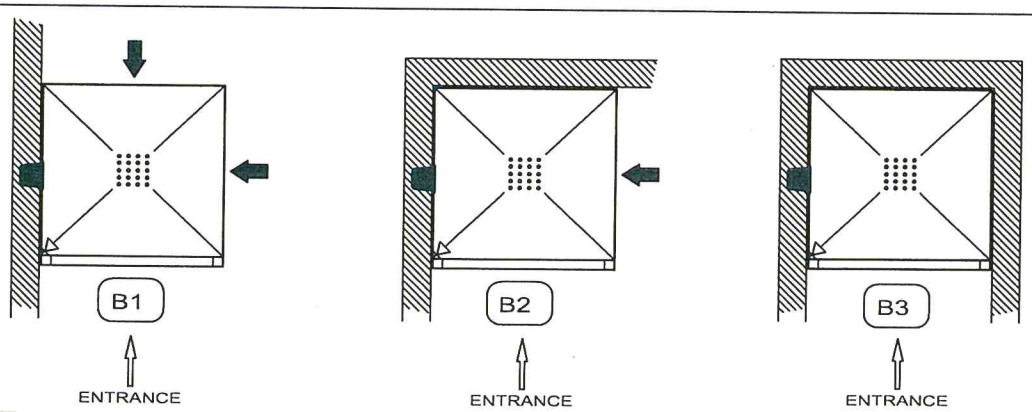

SPECIFY

BOX INDICATES PLUMBING CHASE. 1/2" (13mm) SUPPLY(S) AND 2" (51mm) WASTE BY OTHERS. (TYP.)

ARROW INDICATES POLISHED EXTERIOR SURFACE. ALL CABINETS FURNISHED WITH FRONT AND INTERIOR OF CABINET POLISHED; CHASE SIDE AND TOP ARE UNFINISHED.

RIGHT HAND CHASE:

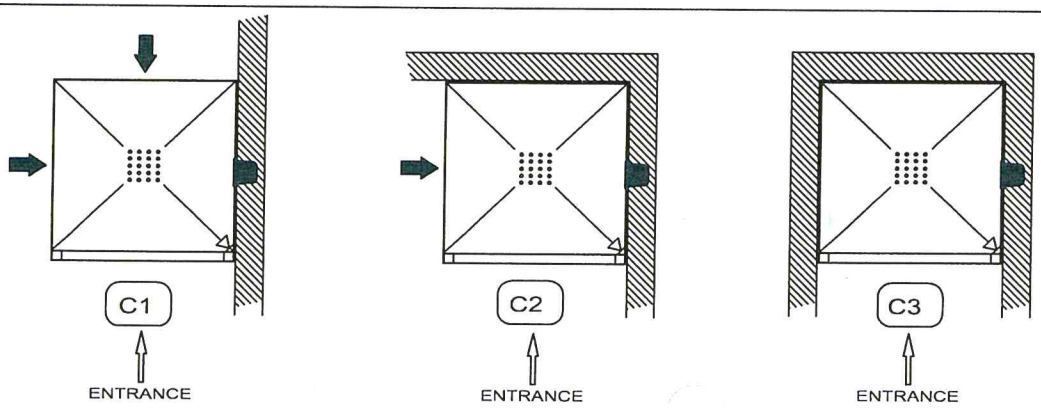

Willoughby Industries - *Security Products*

WILLOUGHBY

PML1 / PSL1 Single Temperature Lead-free Pneumatic Valve

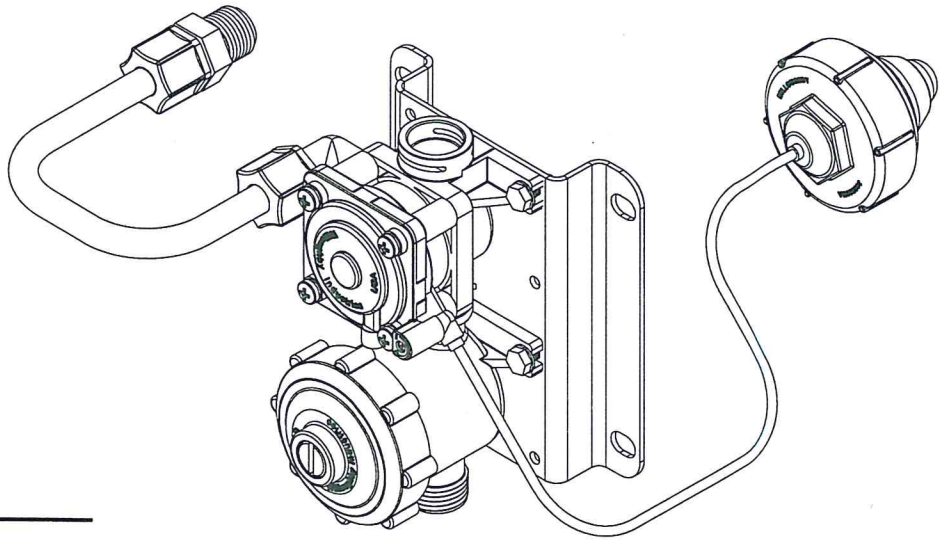

(PML1 SHOWN)

Recommended Specifications

Single Temperature, Lead-free Pneumatic Valve assembly shall be: Willoughby Model No. **P__L1** (Select from options list)

The valve assembly shall use diaphragms to pneumatically activate non-hold-open metering (5-90 second) or non-metering pneumatic valves. The vandal-resistant push buttons shall be keyed/non-removable from the front of the fixture and shall require less than 5 lbs of force to operate.

The plastic valve checkstop/strainer shall feature integral mounting points. Replaceable stainless steel strainer and optional 0.5 GPM flow control can be serviced without disturbing the supply line. Assembly shall use flexible tubing to connect to the filler/bubbler/shower head. Water inlet is 1/2" MPT and is reversible for either top or bottom supply. A galvanized wall mounting plate is provided, wall anchoring hardware provided by others.

Flexible tubing is supplied for walls up to 8" thick. Recommended operating pressure shall be 35-70 psi. Valve shall withstand pressures up to 90 psi. The valve must be supplied with tempered water. The maximum length for tubing between the push button actuator and the valve is 10 feet. The pneumatic system is entirely self-contained and shall require no outside air supply. Cost reducing manifolded valves shall consist of multiple valve assemblies served by a common supply line.

Valve complies with NSF-61 standard.

***LIGATURE-RESISTANT DISCLAIMER**
This product is designed to minimize ligature points. While every effort has been made to reduce the possibility of ligature points, this product does not eliminate all risks. Ligature-Resistant products by Willoughby Industries are to be used in conjunction with, not as a replacement for, trained professionals.

Model Number:

- ☑ PML1 — Single Temp. Metering
- ☐ PSL1 — Single Temp. Non-metering

Flow Selection (choose one):

- ☐ 0.5 GPM Flow (lavatories)
- ☐ 1.0 GPM Flow (bottle fillers)
- ☑ 1.5 GPM Flow (showers)
- ☐ 2.0 GPM Flow (showers)
- ☐ NFC (No Flow Control) (showers, up to MA2)

Push Button:

- ☑ PBH — Ligature-resistant Pneumatic Push Button*
- ☐ PLPB — Pneumatic Palm Push Button

Options:

- ☐ -MA2 (Double Manifold, No flow limitation)
- ☐ -MA3 (Triple Manifold, 0.5 GPM flow only)
- ☐ -MA4 (Quad Manifold, 0.5 GPM flow only)
- ☐ -TMV — In-line Thermostatic Mixing Valve

WARNING: Cancer and Reproductive Harm
- www.P65Warnings.ca.gov

visit our website at www.willoughby-ind.com
5105 West 78th Street • Indianapolis, IN. 46268
(317) 875-0830 • Fax: (317) 875-0837 • (800) 428-4065

MADE IN THE U.S.A.

© Rev. 8/2021

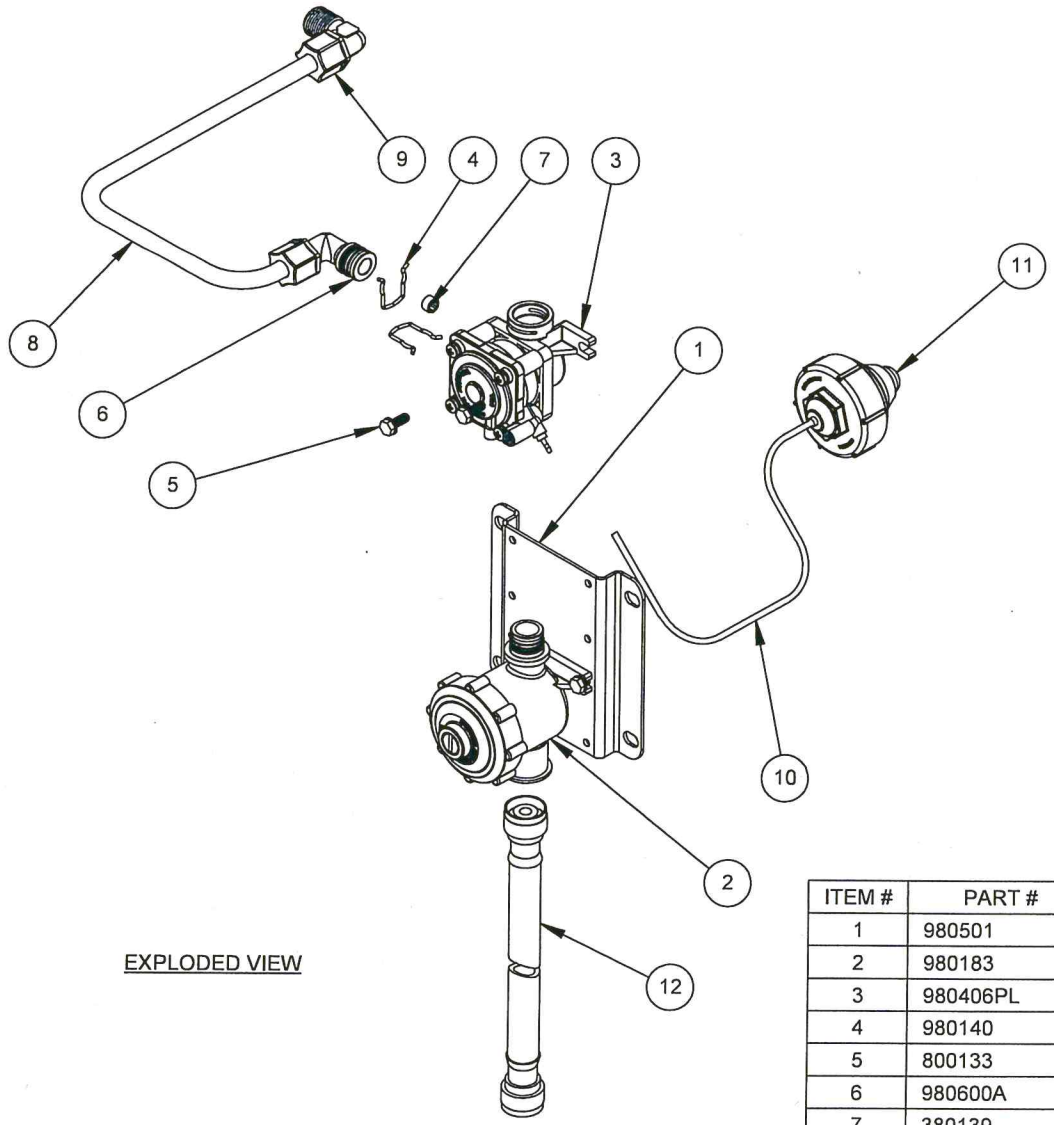

EXPLODED VIEW

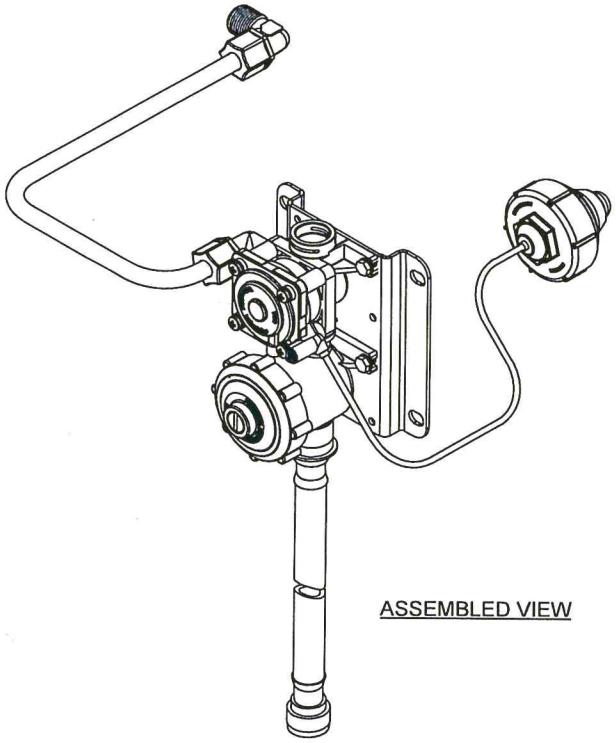

ASSEMBLED VIEW

ITEM #	PART #	DESCRIPTION	QTY.
1	980501	PM1 VALVE BRACKET	1
2	980183	CHECKSTOP ASSEMBLY	1
3	980406PL	PNEUMATIC METERING VALVE ASSY - LEFT PLUGGED	1
4	980140	SPRING CLIP, ROUND	2
5	800133	#10-16 SELF TAP TYPE B HEX HEAD SCREW	4
6	980600A	VALVE FITTING ASSEMBLY, 3/8" ELBOW	1
7	380139	FLOW REGULATOR 1.5 GPM (MR03 GRAY)	1
8	600523	FLEXIBLE TUBING 3/8"OD X 1/4"ID X 60" LONG	1
9	320577	90 ELBOW, 3/8 MPT X 3/8 TUBE	1
10	600470	PNEUMATIC TUBING 1/16"ID (RED) X 60" LONG	1
11	600306LR	(PBH) LIGATURE-RESISTANT PNEUMATIC PUSH BUTTON	1
12	980520	20" FLEX HOSE, 1/2 F.I.P CONNECTION	1

WILLOUGHBY

Willoughby Industries, Inc.
Indianapolis, Indiana

TOLERANCES EXCEPT AS NOTED: 2 PLCS. ±0.03; 3 PLCS. ±0.01; FRACTIONS: ±1/32; ANGLE ±1°

TITLE / DESC.: VALVE ASSY PNEU. METERING-SINGLE TEMP-1.5 GPM-LEAD FREE

PART #: PML1115G0E

MAT'L: N/A

REF.:

REVISION: A

ORIG.: EF '15

REV.: EL 7

STANDARD

SHEET: 1 OF 1

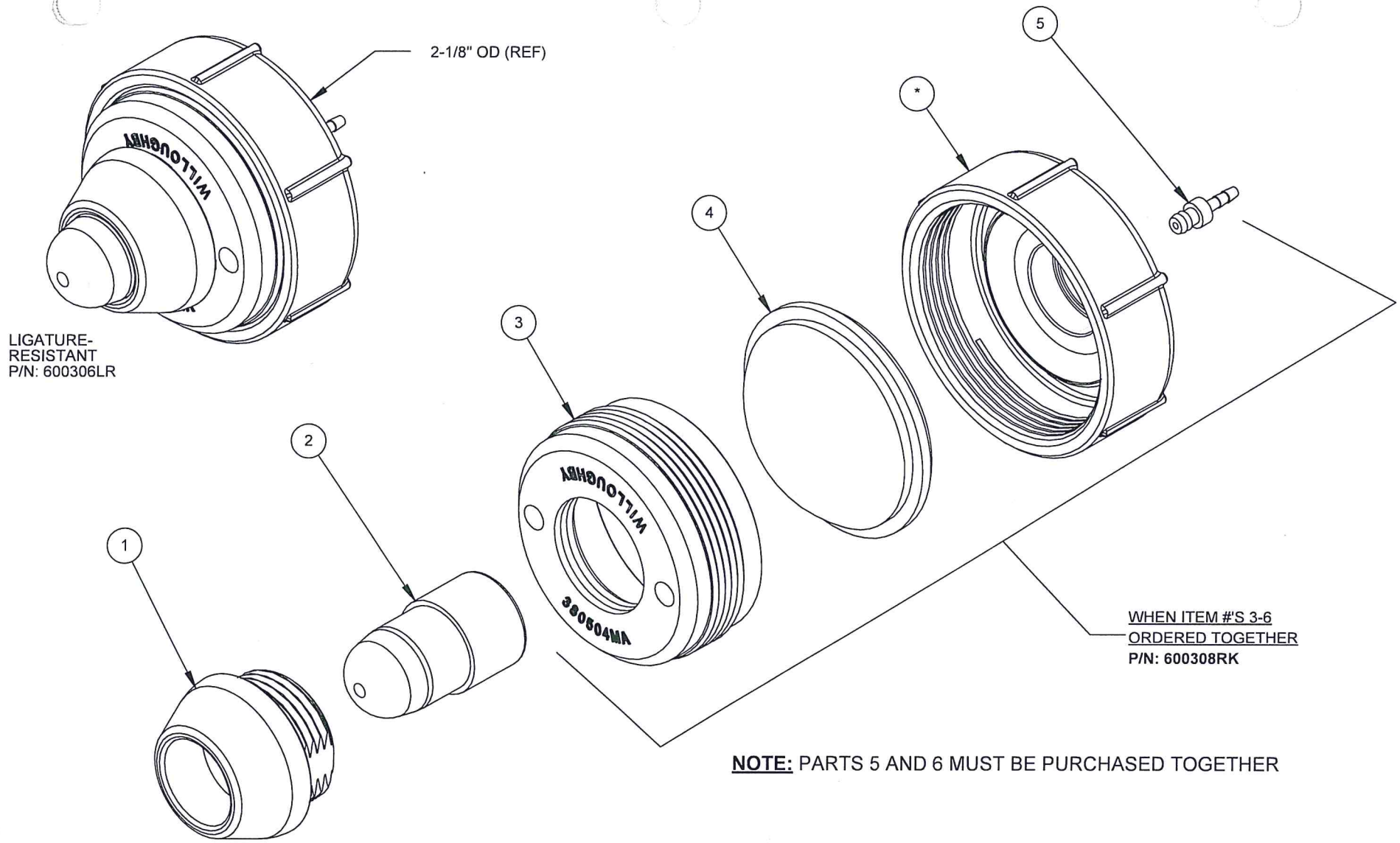

NOTE: PARTS 5 AND 6 MUST BE PURCHASED TOGETHER

ITEM #	PART #	DESCRIPTION	QTY.
1	380119	PUSHBUTTON SLEEVE, LIGATURE-RESISTANT DIAPH. PUMP	1
2	600046	PUSHBUTTON, LIGATURE-RESISTANT DIAPHRAGM PUMP	1
3	380504MA	CAP, DIAPHRAGM PUMP, MOLDED	1
4	600201	DIAPHRAGM, PNEUMATIC PUMP	1
5	380840	FITTING, HOSE BARB, PUSH-IN, 1/16" (BRASS)	1

WILLOUGHBY	Willoughby Industries, Inc. Indianapolis, Indiana		TITLE / DESC.: (PBH) LIGATURE-RESISTANT PNEUMATIC PUSH BUTTON				PART #: 600306LR	
	TOLERANCES EXCEPT AS NOTED	2 PLCS: 0.03 3 PLCS: 0.015 FRACTIONS: 1/32" ANGLE: 1	SIZE: A	MAT'L: AS NOTED, SEE BOM	REVISION: A	ORIG.: EEF 4/5/17		STANDARD
			SCALE: 1:20	REF.:		REV.: NAL 6/10/21		SHEET: 1 OF 1

Willoughby Industries - *Security Products*

WILLOUGHBY

NPS (WSH-7) Non-Adjustable Vandal Resistant Shower Head (#370098)

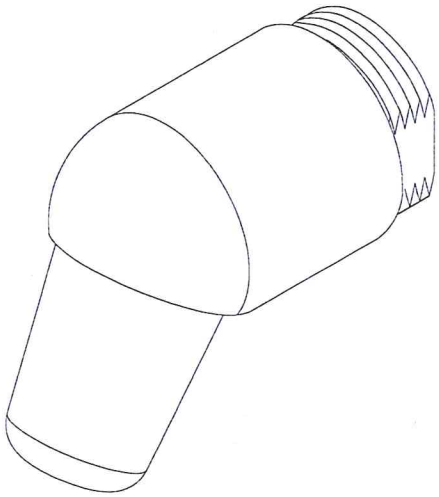

(Unit may be shown with optional features)

Recommended Specifications

Willoughby model NPS (WSH-7) non-adjustable, vandal resistant shower head shall be fixed type, constructed of Type 303 stainless steel, mounted from the rear with no visible fasteners or removable parts, and shall have a fixed 30° angle of spray with an adjustable pattern. The head shall have 3/8" F.I.P. threads on the inlet.

The shower head is non-adjustable from the user side. To adjust shower nozzle spray pattern, insert a 1/8" Allen wrench through the nozzle orifice when shower is not in use, and turn counterclockwise to widen spray pattern or clockwise to narrow the spray pattern.

OPTIONS:

☐ NPS17 17° angle of spray (#380011)

☐ 2.5 2.5 Flow (Standard)
☐ 2.0 2.0 In-line Flow Control
(See detail below; tubing must be 3/8" O.D. polyethylene)
☑ 1.5 1.5 In-line Flow Control
(See detail below; tubing must be 3/8" O.D. polyethylene)

PART #380142-XX (SPECIFY FLOW)
IN-LINE FLOW CONTROL ASSEMBLY

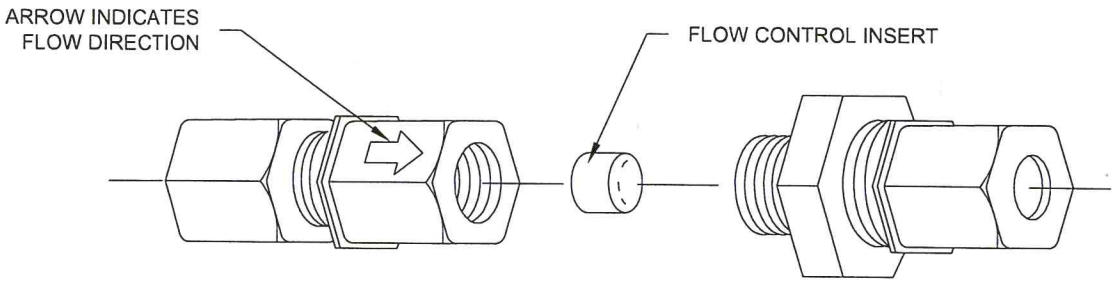

WARNING: Cancer and Reproductive Harm
- www.P65Warnings.ca.gov

visit our website at www.willoughby-ind.com
5105 West 78th Street • Indianapolis, IN. 46268
(317) 875-0830 • Fax: (317) 875-0837 • (800) 428-4065

MADE IN THE **U.S.A.**

© Rev. 7/2019

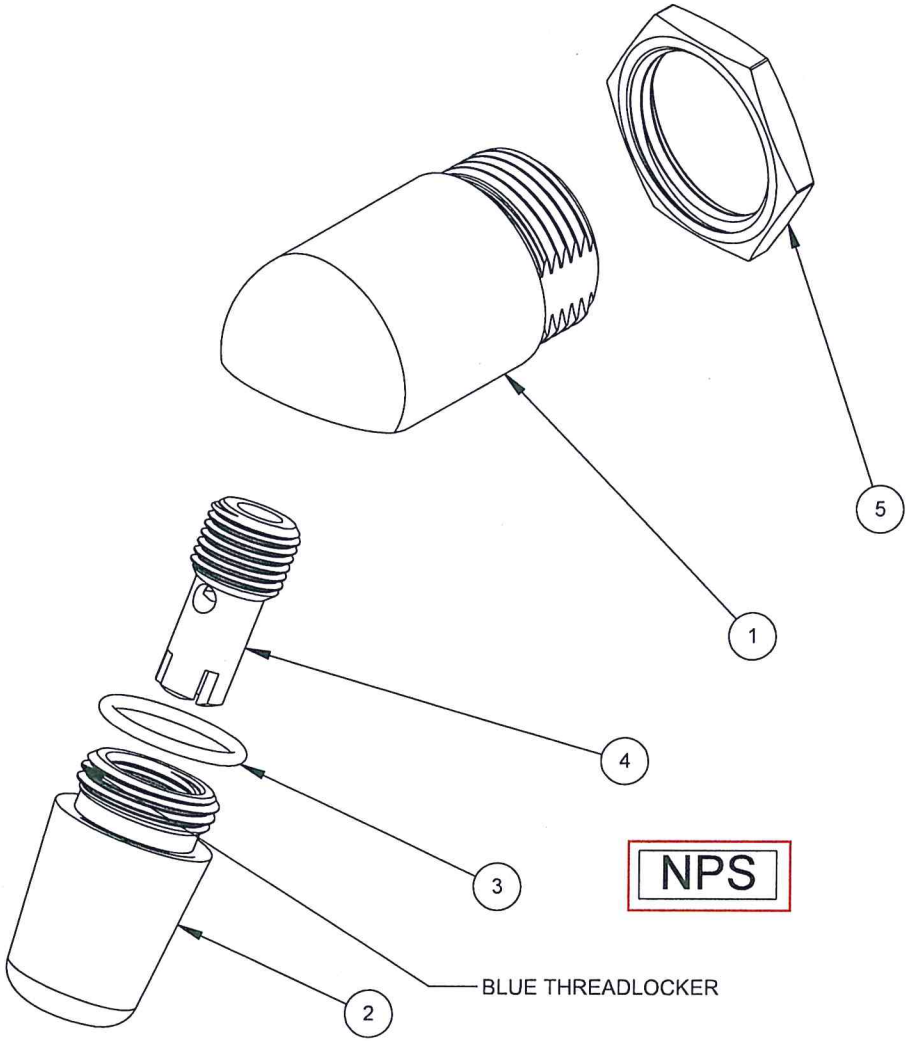

NPS

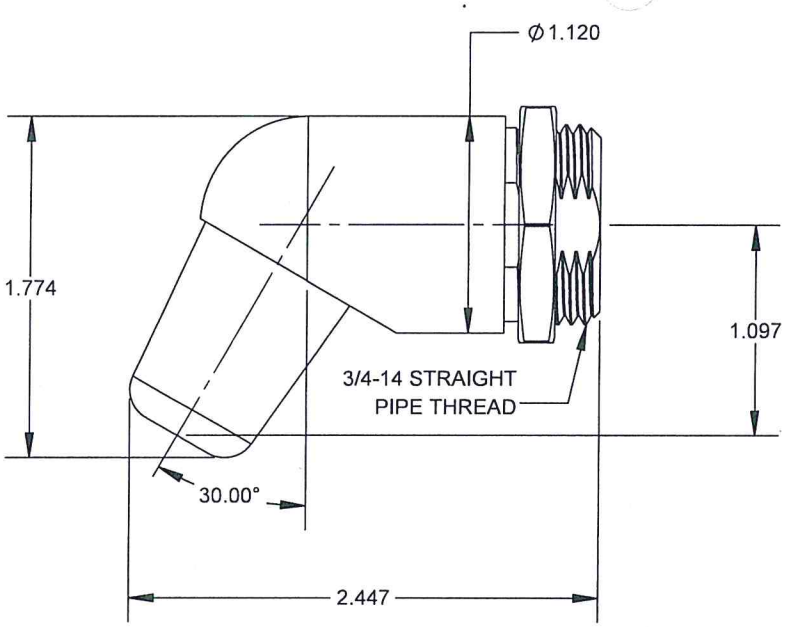

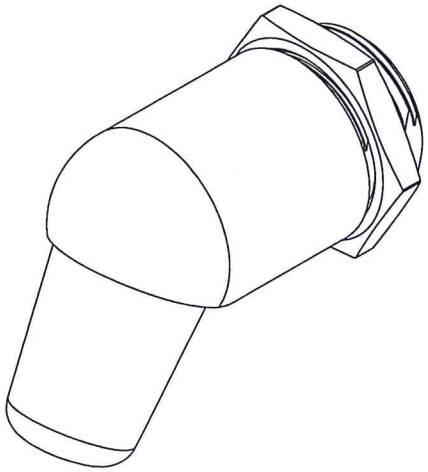

ITEM #	PART #	DESCRIPTION	QTY.
1	380029	SHOWER HEAD BASE - 30 DEG.	1
2	380032	SHOWERHEAD CAP	1
3	600131	O-RING (#017) EPDM NSF61	1
4	380031	SHOWERHEAD INSERT	1
5	600612N	HEXNUT, 3/4"-14 NPSM	1

WILLOUGHBY	Willoughby Industries, Inc. Indianapolis, Indiana	TITLE / DESC.: NPS SHOWERHEAD ASSEMBLY, NPS (WSH-7)				PART #: 370098	
	TOLERANCES EXCEPT AS NOTED	2 PLCS: ±0.03 3 PLCS: ±0.015 FRACTIONS: ±1/32" ANGLE: ±1°	SIZE: A SCALE: 1:1	MAT'L: REF.:	REVISION A	ORIG.: EEF 2/4/16 REV.: EFF 2/4/16	STANDARD SHEET: 1 OF 1

WILLOUGHBY	(NHD) NO-HUB DRAIN DETAIL (2") FOR CABINET SHOWERS				P954143A	
	TOLERANCE: DIMENSIONS ARE +/- 1/4" EXCEPT AS NOTED	MATERIAL: AS NOTED	DRAWN BY: ELG	DATE: 11/20/95	REV: G 3/1/21	STANDARD DWG.
			SCALE: NOT TO SCALE			

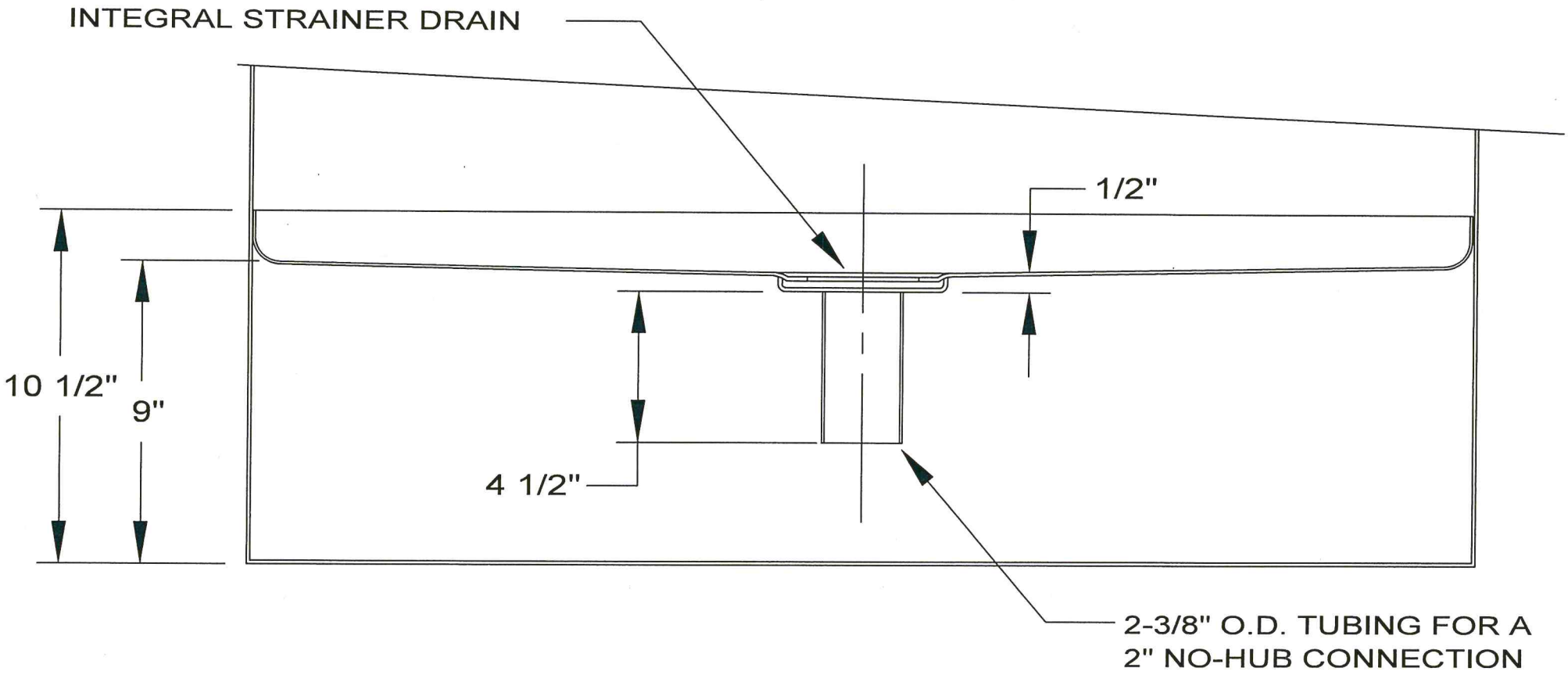

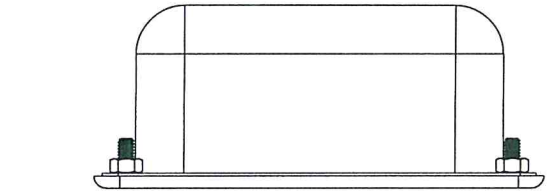

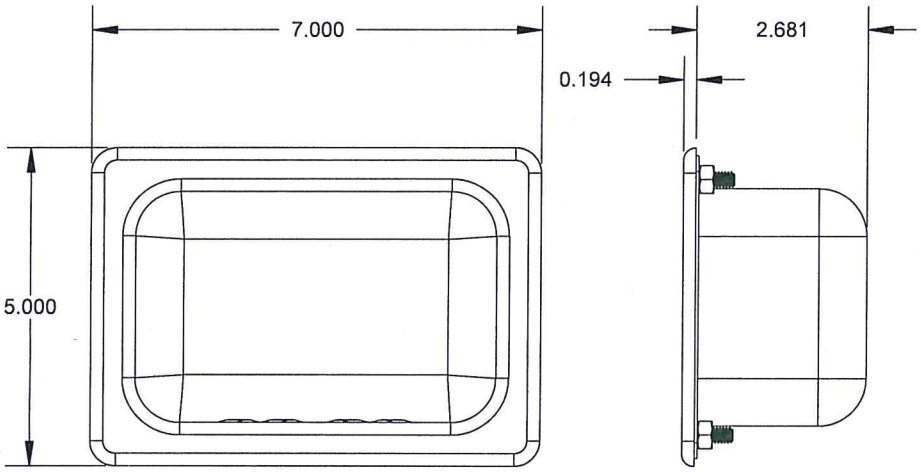

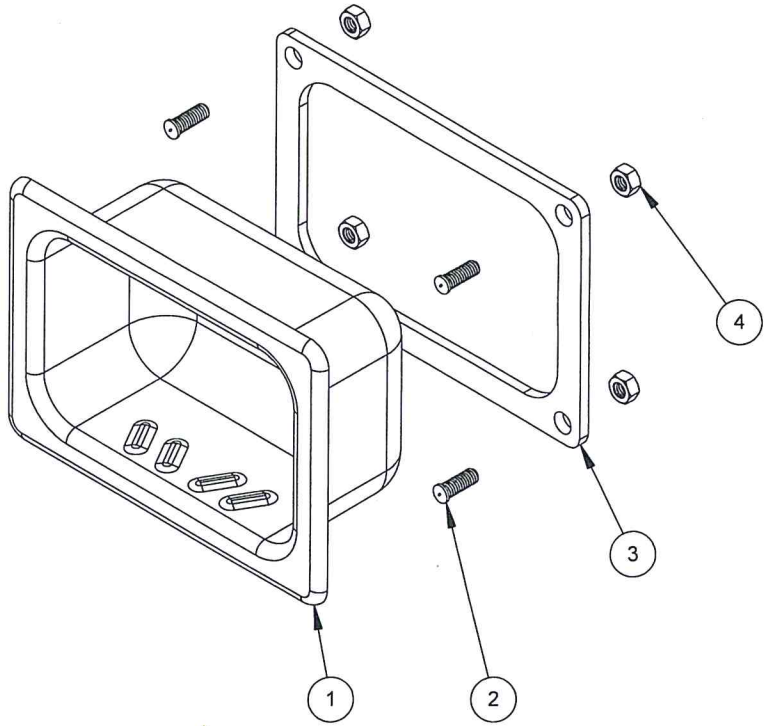

ITEM #	PART #	DESCRIPTION	QTY.
1	200720	SOAP DISH - RECESSED	1
2	800135	WELD STUD, 1/4-20 X 3/4" S/S	4
3	380052N	GASKET, SOAP DISH	1
4	600613N	HEX NUT, 1/4"-20, STAINLESS STEEL	4

WILLOUGHBY	**Willoughby Industries, Inc.** Indianapolis, Indiana			TITLE / DESC.: (RD) RECESSED SOAP DISH ASSEMBLY				PART #: 1745SA-C
	TOLERANCES EXCEPT AS NOTED	2 PLCS: ±0.03 3 PLCS: ±0.015 FRACTIONS: ±1/32" ANGLE: ±1°	SIZE: A	MAT'L: N/A	REVISION: A	ORIG.: EEF 1/15/16		STANDARD
			SCALE: 1:3	REF.:		REV.: EEF 1/15/16		SHEET: 1 OF 1

Willoughby
Project # 40339 **Item #** P-3A

WILLOUGHBY INDUSTRIES, INC.

Contractor Checklist for Cabinet Showers

This information must be received for order to be processed.
(Standard accessory locations shown on drawings will be used if no information is given).

- ❑ Specify showerhead/pushbutton orientation and shower finish schedule:

- ❑ Specify Release Towel hook location:

I have reviewed the submittal package for this fixture. I have verified that the information given with regards to the above questions is correct and this fixture is released for production.

Signature_____ Company_____ Date_____

Willoughby Industries - *Security Products*

WILLOUGHBY

ADA Compliant Front Access Transfer Cabinet Shower

P-3A

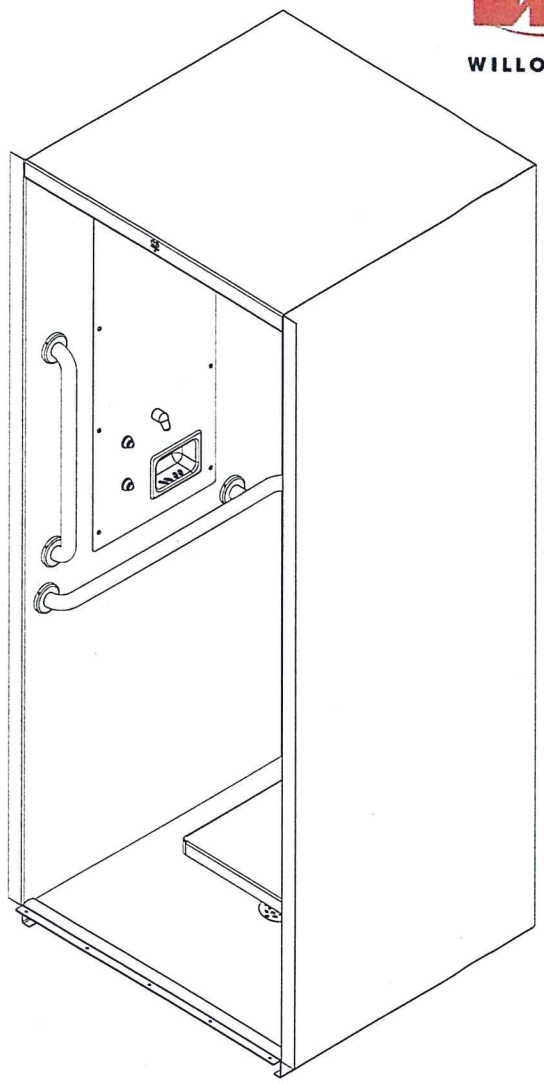

IN COMPLIANCE WITH A.D.A. 2010

Recommended Specifications

ADA Compliant Front Access Transfer Cabinet Shower shall be: Willoughby Model No.___**S- 3636-HC-FA**
(Select from model number and options list on next page)

Shower cabinet shall be fabricated from 14 gauge, Type 304 stainless steel. Shower floor shall be fabricated from 11 gauge, Type 304 stainless steel. The construction shall be ***all-welded*** (unitized models only, not applicable to knockdown models),exposed stainless surfaces polished to a #4 satin finish, except shower floor which shall have a non-slip glass blast finish.

Standard equipment shall include:
- (ICD) Inside caulk drain (2") with removable strainer
- (GB3318) 18" x 33" Horizontally-mounted L-shaped grab bar
- (GB24V) 24" Vertically-mounted grab bar
- (FSS) Fold-up stainless steel shower seat
-1/2" ADA Threshold with anchor holes

Unit requires no chase area for installation and maintenance. Shower valve and shower head shall be mounted on removable access panel secured with security screws.

Underside of shower floor shall be sound deadened with fire resistant material.

Unit requires 2" recess in floor.

Optional WaterSense Labeled ligature-resistant shower head available (LRSH).

Please provide shower finish schedule upon ordering.
(Unit may be shown with optional features)

To specify fixture and accessories, use the Model Number and Options page.

Example: To specify a unitized 36" x 36" Front Access Handicap Cabinet Shower with left hand shower head/push button/valving, polished front, single temp. pneumatic metering valves, standard ligature-resistant pneumatic push buttons, 2.5 GPM flow rate, two non-adjustable penal shower heads, standard inside caulk drain, and recessed mounted soap dish

Use the following Willoughby Model Number:
US-3636-HC-FA-L-B3-PML1-MA2-PBH-2.5GPM-NPS-2HD-ICD-RD

The location of the showerhead within the cabinet shower could result in potential water spray outside of the shower compartment. It is highly recommended that a floor drain be utilized at or near the shower entrance. The floor drain is to be provided by others.

Fixture shall be free-standing, no anchoring required.

To specify Knockdown Cabinet Shower: Select the "KS" model number from the list on the Model Number and Options page.

WARNING: Cancer and Reproductive Harm
- www.P65Warnings.ca.gov

visit our website at www.willoughby-ind.com
5105 West 78th Street • Indianapolis, IN. 46268
(317) 875-0830 • Fax: (317) 875-0837 • (800) 428-4065

MADE IN THE **U.S.A.**

© Rev. 6/2022

MODEL NUMBER AND OPTIONS:

1.) Base Model Number:

Unitized Handicap Front Access Cabinet Shower:

☑ US-3636-HC-FA 36"L x 36"W Cabinet Shower

Knockdown Handicap Front Access Cabinet Shower:

☐ KS-3636-HC-FA 36"L x 36"W Cabinet Shower

2.) Shower Head/Push Button/Valve Orientation: SPECIFY

☐ L Left Hand

☐ R Right Hand

3.) Cabinet Side Exterior Finish Schedule:

(Based on Chase Wall Orientation; see the Options Pages at the end of Catalog Section for diagram))

For (LCS) Left Wall:

☐ B2 Polished Front & Right Side

☐ B3 Polished Front only

For (RCS) Right Wall:

☐ C2 Polished Front & Left Side

☐ C3 Polished Front only

4.) Valve Selection:

☐ NV No Valve

☑ PML1 Single Temp. Pneumatic Metering Ⓢ Ⓛ

☐ PML2 Dual Temp. Pneumatic Metering Ⓢ Ⓛ

☐ E1L1 Single Temp. Electronic (Pick Control)* Ⓢ Ⓛ

☐ E1L2 Dual Temp. Electronic (Pick Control)* Ⓢ Ⓛ

☐ PBV Pressure-Balancing Mixing Valve

☐ TPV Temp/Pressure-Balancing Mixing Valve

☐ TPLR Ligature-resistant Temp/Pressure-Balancing Mixing Valve Ⓛ

Valve Manifold Option:

Pneumatic or Electronic Valves Only:

(See the Manifold Option Page at the end of Catalog Section S5 for further information)

☑ MA2

5.) Diverter Valve:

☐ DV Diverter Valve

☐ DVLR Ligature-resistant Diverter Valve Ⓛ

☐ PML1-MA2 Two Single Temp. Pneumatic Metering Valves in Lieu of Diverter Valve Ⓛ

6.) Push Button Selection:

Pneumatic or Electronic Valves Only:

☑ PBH Ligature-resistant Pneumatic Push Buttons Ⓢ Ⓛ

☐ PZPB Ligature-resistant Piezo Electronic Push Buttons* Ⓢ Ⓛ

7.) Flow Rates:

☐ 2.5 GPM (Standard)

☐ 2.0 GPM

☑ 1.5 GPM

8.) Electronic Controls*

(Must Use Electronic Push Button):

☐ WUSC-2200 ☐ WUSC-2400

☐ Pneutronic ☐ WMS II

9.) Shower Head Selection:

☑ NPS Non-adjustable Penal Shower Head Ⓢ

☑ FX Hand Held Flexshower w/ Quick Disconnect and Vacuum Breaker

☐ APS Adjustable Penal Shower Head

☐ CSH Ligature-resistant Shower Head Ⓢ Ⓛ

☐ 2HD (2) Fixed Shower Heads, Replaces (FX) Ⓢ

☐ LRSH Ligature-resistant Shower Head, WaterSense Labeled, 2.0 GPM Max Flow Rate Ⓛ

10.) Drain Selection:

☑ ICD Inside Caulk Cabinet Shower Drain (2") (Standard)

11.) Options:

☐ VG Ventilation Grille (Specify Free Area and Location; Standard Grille Dimensions: 8-3/4" x 8-3/4" with 15-3/4 in² open area)

☐ CP Closure Panels (Specify Dimensions and Locations)

☐ STC Sloping Top Closure

☐ MD__ Modesty Door (Not ADA-Compliant)

☐ L Hinged Left

☐ R Hinged Right

☐ CR Curtain Rod

☑ TH1 Release Towel Hook Ⓢ Ⓛ

☐ GBC Grab Bar Closure Plate Ⓢ Ⓛ

☑ RD Recessed Mounted Soap Dish Ⓢ Ⓛ

☐ SD Surface Mounted Soap Dish

☐ TMV In-line Thermostatic Mixing Valve

☐ TF24H Hard-wired Transformer, 110VAC to 24VAC*

☐ TF24P Plug-in Transformer, 110VAC to 24VAC*

☐ LFSS Less Fold-up Stainless Steel Shower Seat (NOTE: FSS Fold-up Shower Seat is required for ADA Compliance)

☐ LGB3318 Less 18" x 33" Horizontally-mounted L-Shaped Grab Bar

☐ LGB24V Less 24" Vertically-mounted Grab Bar

☐ LRD5 5" Ligature-resistant Drain Cover Ⓛ

☐ Other _____

☐ Other _____

*(Req. 110V power through ground fault interrupter (GFCI) receptacle)

Ⓢ For security applications

Ⓛ Ligature-resistant option***

*****LIGATURE-RESISTANT DISCLAIMER**

This product is designed to minimize ligature points. While every effort has been made to reduce the possibility of ligature points, this product does not eliminate all risks. Ligature-Resistant products by Willoughby Industries are to be used in conjunction with, not as a replacement for, trained professionals.

Approved For Manufacturing By: _____ Date: _____ Company: _____

Wall Thickness: _____ Wall Type: _____

VERIFY ALL DIMENSIONS WITH FACTORY PRIOR TO ROUGH-IN

WILLOUGHBY RESERVES THE RIGHT TO MAKE CHANGES IN DESIGN AND DIMENSIONS WITHOUT FORMAL NOTICE AND WITHOUT INCURRING OBLIGATION.

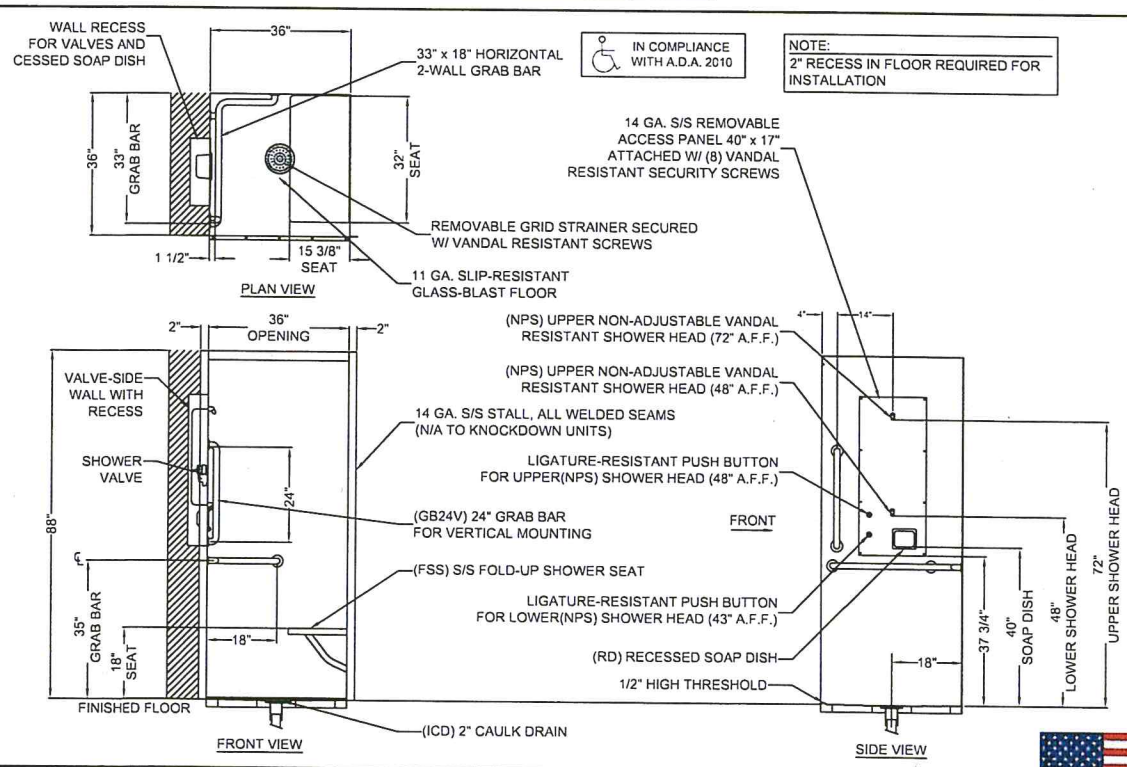

visit our website at www.willoughby-ind.com

5105 West 78th Street • Indianapolis, IN. 46268

(317) 875-0830 • Fax: (317) 875-0837 • (800) 428-4065

MADE IN THE **U.S.A.**

© Rev. 6/2022

TAG: P-3...

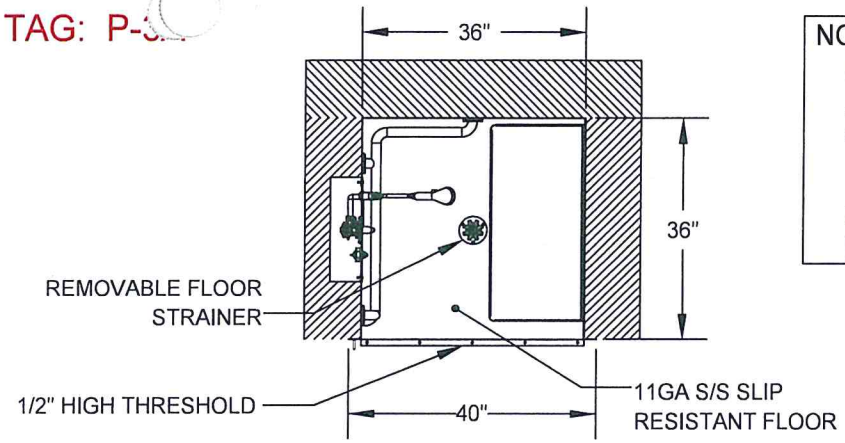

NOTE:
5" MINIMUM CHASE AREA REQUIRED ON VALVE/SOAP DISH SIDE

2" RECESS IN FLOOR REQUIRED FOR INSTALLATION

IN COMPLIANCE WITH A.D.A. 2010

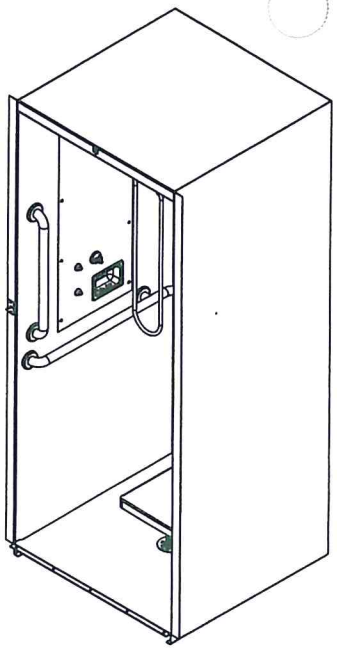

PBH | PML1-MA2 | *B3 | RD
ICD | FX | NPS | 1.5 GPM
TH1L

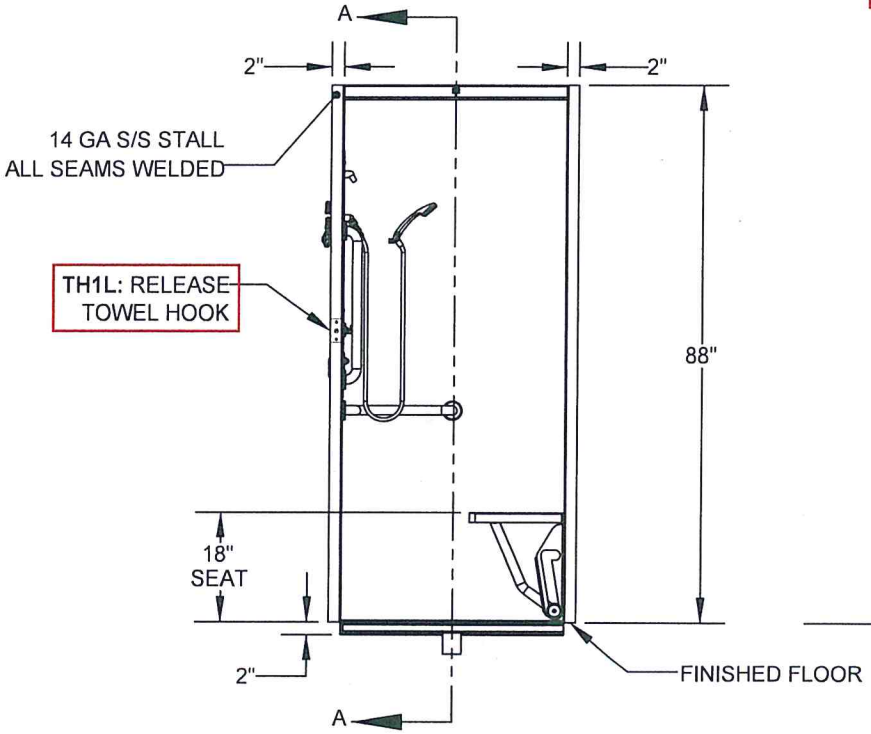

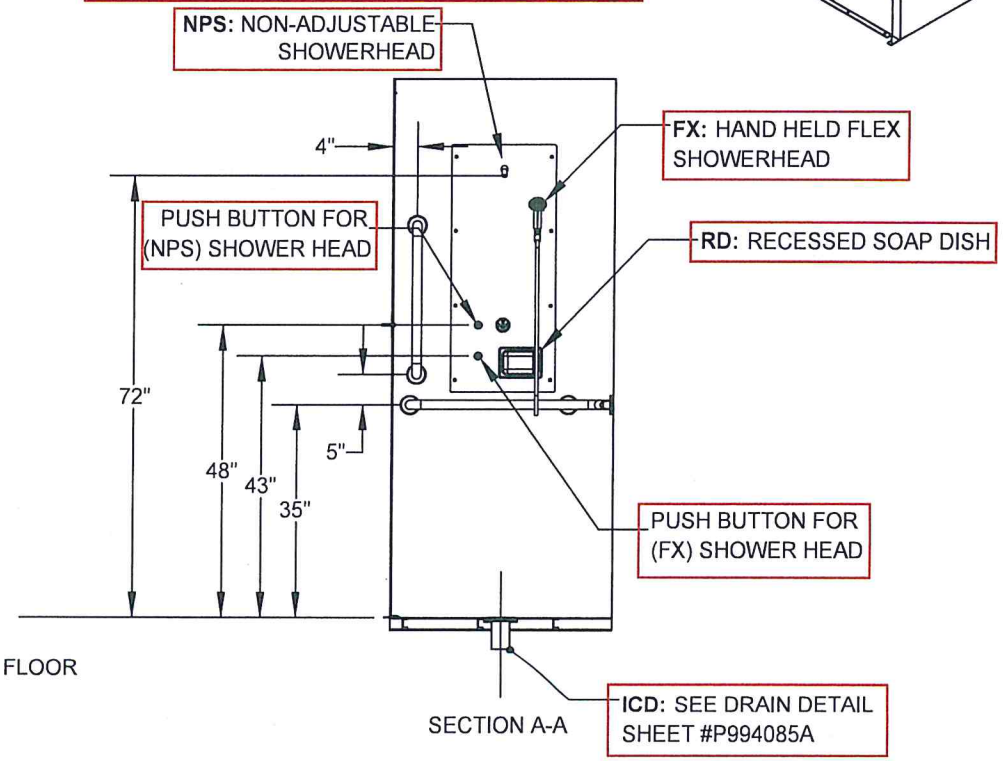

*NOTE:
SEE FINISH SCHEDULE PRINT # P954043A

Willoughby Industries, Inc. Indianapolis, Indiana	TITLE / DESC.: CABINET SHOWER ASSEMBLY - US-3636-HC-FA US-3636-HC-FA-L-B3-PML1-MA2-PBH-1.5-NPS-FX-ICD-TH1L-RD				PART #: P224598A
TOLERANCES EXCEPT AS NOTED: 2 PLCS ±0.03, 3 PLCS ±0.015, FRACTIONS ±1/32"	SIZE: A	MAT'L: 14 GA 304 SS #4 SATIN FINISH	REVISION: A	ORIG.: MCL 7/6/22	STANDARD
	SCALE: 1:32	REF.: S3636-XXX2		REV.: MCL 7/6/22	SHEET: 1 OF 1

WILLOUGHBY	TITLE: SHOWER FINISH SCHEDULE FOR HANDICAP SHOWERS				DRAWING #: P024043A	
	DIMENSIONS ARE +/- 1/4" EXCEPT AS NOTED	MATERIAL: N/A	DRAWN BY: JR	DATE: 06/26/02	REV. #: F 6/29/20	STANDARD DWG
			SCALE: NONE			

LEFT HAND CHASE:

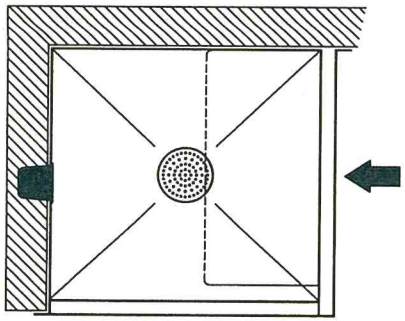

B2

ENTRANCE

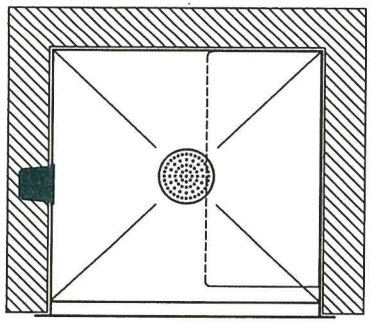

B3

ENTRANCE

RIGHT HAND CHASE:

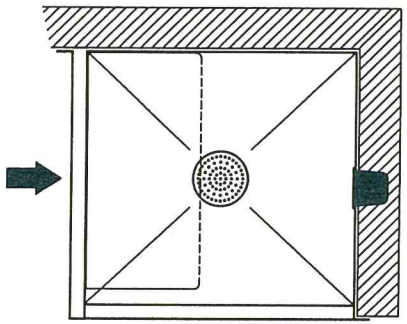

C2

NTRANCE

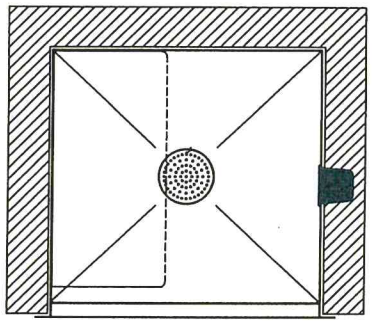

C3

ENTRANCE

SPECIFY

BOX INDICATES PLUMBING CHASE. 1/2" (13mm) SUPPLY(S) BY OTHERS

ARROW INDICATES POLISHED EXTERIOR SURFACE. ALL CABINETS FURNISHED WITH FRONT AND INTERIOR OF CABINET POLISHED; CHASE SIDE AND TOP ARE UNFINISHED.

Willoughby Industries - *Security Products*

WILLOUGHBY

PML1 / PSL1
Single Temperature
Lead-free
Pneumatic Valve

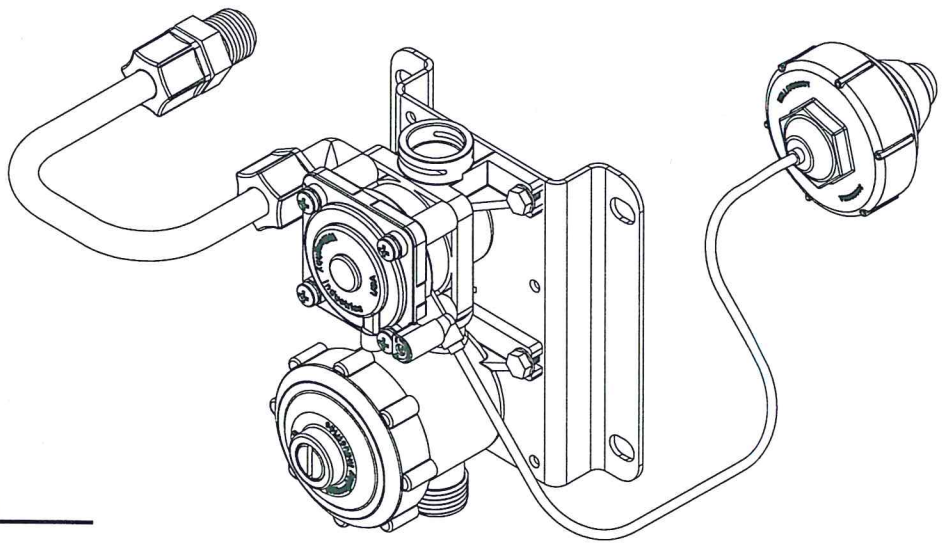

(PML1 SHOWN)

Recommended Specifications

Single Temperature, Lead-free Pneumatic Valve assembly shall be: Willoughby Model No. **P__L1** (Select from options list)

The valve assembly shall use diaphragms to pneumatically activate non-hold-open metering (5-90 second) or non-metering pneumatic valves. The vandal-resistant push buttons shall be keyed/non-removable from the front of the fixture and shall require less than 5 lbs of force to operate.

The plastic valve checkstop/strainer shall feature integral mounting points. Replaceable stainless steel strainer and optional 0.5 GPM flow control can be serviced without disturbing the supply line. Assembly shall use flexible tubing to connect to the filler/bubbler/shower head. Water inlet is 1/2" MPT and is reversible for either top or bottom supply. A galvanized wall mounting plate is provided, wall anchoring hardware provided by others.

Flexible tubing is supplied for walls up to 8" thick. Recommended operating pressure shall be 35-70 psi. Valve shall withstand pressures up to 90 psi. The valve must be supplied with tempered water. The maximum length for tubing between the push button actuator and the valve is 10 feet. The pneumatic system is entirely self-contained and shall require no outside air supply. Cost reducing manifolded valves shall consist of multiple valve assemblies served by a common supply line.

Valve complies with NSF-61 standard.

***LIGATURE-RESISTANT DISCLAIMER**
This product is designed to minimize ligature points. While every effort has been made to reduce the possibility of ligature points, this product does not eliminate all risks. Ligature-Resistant products by Willoughby Industries are to be used in conjunction with, not as a replacement for, trained professionals.

Model Number:
- ☑ PML1 — Single Temp. Metering
- ☐ PSL1 — Single Temp. Non-metering

Flow Selection (choose one):
- ☐ 0.5 GPM Flow (lavatories)
- ☐ 1.0 GPM Flow (bottle fillers)
- ☑ 1.5 GPM Flow (showers)
- ☐ 2.0 GPM Flow (showers)
- ☐ NFC (No Flow Control) (showers, up to MA2)

Push Button:
- ☑ PBH — Ligature-resistant Pneumatic Push Button*
- ☐ PLPB — Pneumatic Palm Push Button

Options:
- ☑ -MA2 (Double Manifold, No flow limitation)
- ☐ -MA3 (Triple Manifold, 0.5 GPM flow only)
- ☐ -MA4 (Quad Manifold, 0.5 GPM flow only)
- ☐ -TMV — In-line Thermostatic Mixing Valve

WARNING: Cancer and Reproductive Harm - www.P65Warnings.ca.gov

visit our website at www.willoughby-ind.com
5105 West 78th Street • Indianapolis, IN. 46268
(317) 875-0830 • Fax: (317) 875-0837 • (800) 428-4065

MADE IN THE U.S.A.

© Rev. 8/2021

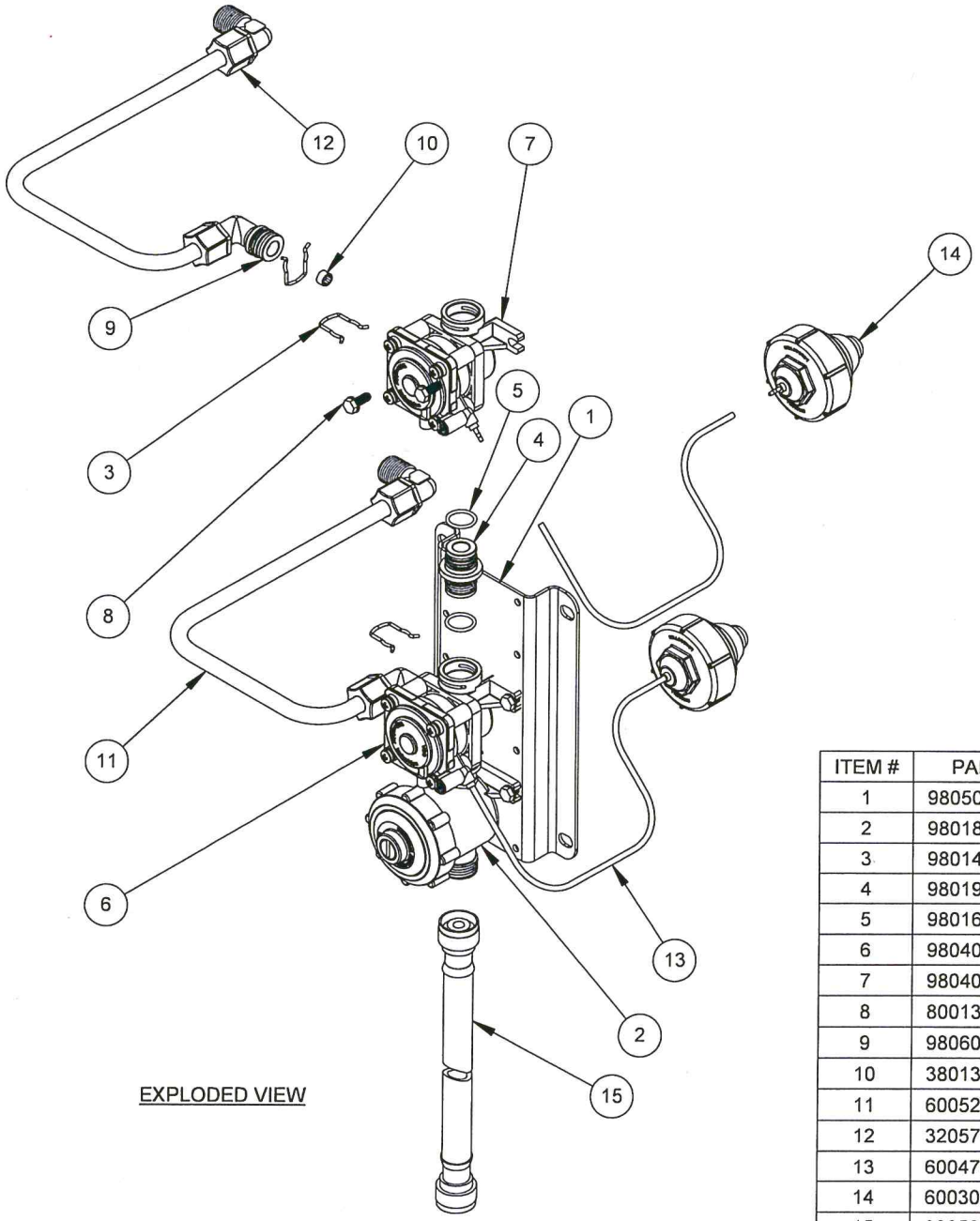

EXPLODED VIEW

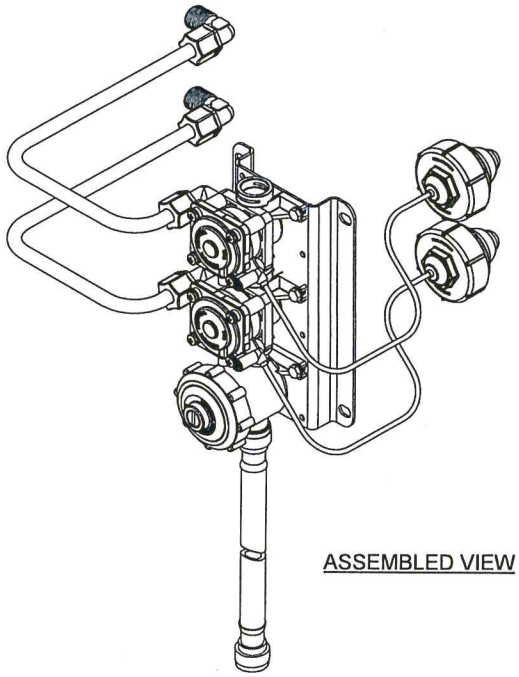

ASSEMBLED VIEW

ITEM #	PART #	DESCRIPTION	QTY.
1	9805012	MOUNTING PLATE, PM1-MA2 VALVE	1
2	980183	CHECKSTOP ASSEMBLY	1
3	980140	SPRING CLIP, ROUND	5
4	980197	PLASTIC VALVE COUPLING	1
5	980164	O-RING, #015	2
6	980406L	PNEUMATIC METERING VALVE ASSEMBLY - LEFT	1
7	980406PL	PNEUMATIC METERING VALVE ASSY - LEFT PLUGGED	1
8	800133	#10-16 SELF TAP TYPE B HEX HEAD SCREW	6
9	980600A	VALVE FITTING ASSEMBLY, 3/8" ELBOW	2
10	380139	FLOW REGULATOR 1.5 GPM (MR03 GRAY)	2
11	600523	FLEXIBLE TUBING 3/8"OD X 1/4"ID	2
12	320577	90 ELBOW, 3/8 MPT X 3/8 TUBE	2
13	600470	PNEUMATIC TUBING 1/16"ID (RED)	2
14	600306LR	(PBH) LIGATURE-RESISTANT PNEUMATIC PUSH BUTTON	2
15	980520	20" FLEX HOSE, 1/2 F.I.P CONNECTION	1

WILLOUGHBY

Willoughby Industries, Inc.
Indianapolis, Indiana

TOLERANCES EXCEPT AS NOTED: 2 PLCS: ±0.03; 3 PLCS: ±0.01; FRACTIONS: ±1/32; ANGLE: ±1°

A

TITLE / DESC.: VALVE ASSY PNEU. METERING-SINGLE TEMP-1.5 GPM-LEAD FREE

PART #: PML1215G0E

MAT'L: N/A

REF.:

REVISION: A

ORIG.: EF[illegible] [illegible]6/15

REV.: E[illegible] [illegible]7

STANDARD

SHEET: 1 OF 1

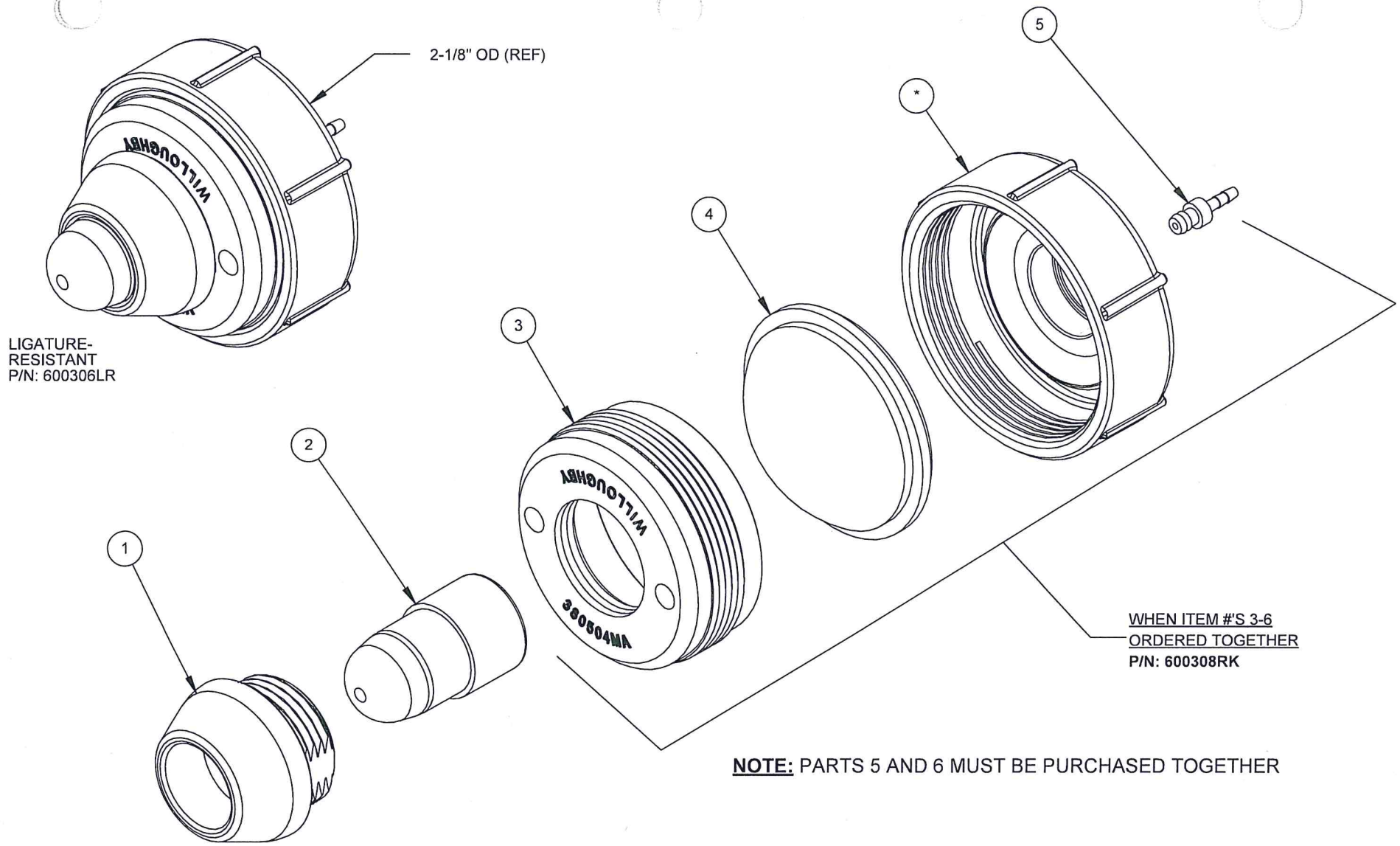

NOTE: PARTS 5 AND 6 MUST BE PURCHASED TOGETHER

ITEM #	PART #	DESCRIPTION	QTY.
1	380119	PUSHBUTTON SLEEVE, LIGATURE-RESISTANT DIAPH. PUMP	1
2	600046	PUSHBUTTON, LIGATURE-RESISTANT DIAPHRAGM PUMP	1
3	380504MA	CAP, DIAPHRAGM PUMP, MOLDED	1
4	600201	DIAPHRAGM, PNEUMATIC PUMP	1
5	380840	FITTING, HOSE BARB, PUSH-IN, 1/16" (BRASS)	1

WILLOUGHBY	Willoughby Industries, Inc. Indianapolis, Indiana			TITLE / DESC.: (PBH) LIGATURE-RESISTANT PNEUMATIC PUSH BUTTON			PART #: 600306LR
	TOLERANCES EXCEPT AS NOTED	2 PLCS: 0.03 3 PLCS: 0.015 FRACTIONS: 1/32" ANGLE: 1	SIZE: A SCALE: 1:20	MAT'L: AS NOTED, SEE BOM REF.:	REVISION A	ORIG. EEF 4/5/17 REV.: NAL 6/10/21	STANDARD SHEET 1 OF 1

Willoughby Industries - *Security Products*

WILLOUGHBY

NPS (WSH-7) Non-Adjustable Vandal Resistant Shower Head (#370098)

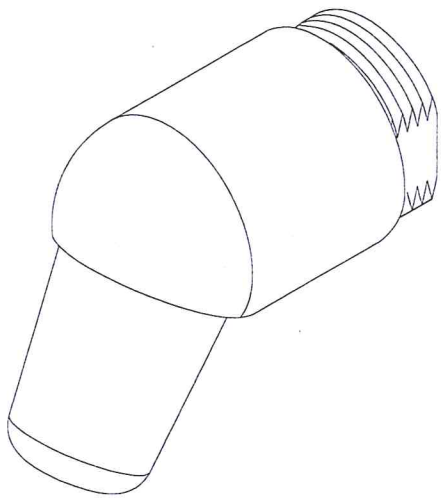

(Unit may be shown with optional features)

Recommended Specifications

Willoughby model NPS (WSH-7) non-adjustable, vandal resistant shower head shall be fixed type, constructed of Type 303 stainless steel, mounted from the rear with no visible fasteners or removable parts, and shall have a fixed 30° angle of spray with an adjustable pattern. The head shall have 3/8" F.I.P. threads on the inlet.

The shower head is non-adjustable from the user side. To adjust shower nozzle spray pattern, insert a 1/8" Allen wrench through the nozzle orifice when shower is not in use, and turn counterclockwise to widen spray pattern or clockwise to narrow the spray pattern.

OPTIONS:

☐ NPS17 17° angle of spray (#380011)

☐ 2.5 2.5 Flow (Standard)
☐ 2.0 2.0 In-line Flow Control
(See detail below; tubing must be 3/8" O.D. polyethylene)
☑ 1.5 1.5 In-line Flow Control
(See detail below; tubing must be 3/8" O.D. polyethylene)

PART #380142-XX (SPECIFY FLOW)
IN-LINE FLOW CONTROL ASSEMBLY

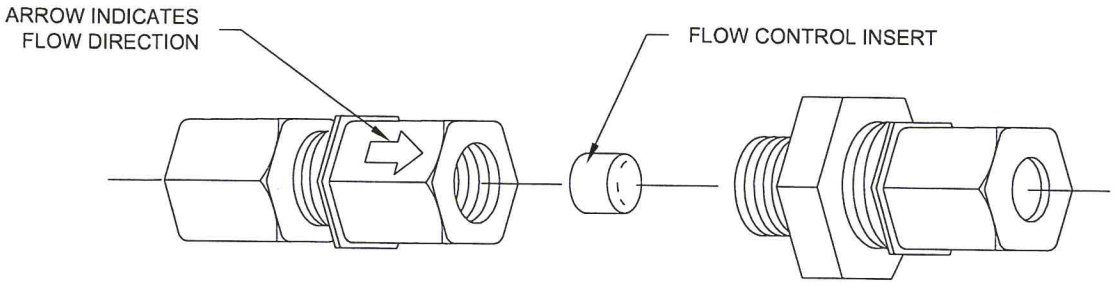

WARNING: Cancer and Reproductive Harm
- www.P65Warnings.ca.gov

visit our website at www.willoughby-ind.com
5105 West 78th Street • Indianapolis, IN. 46268
(317) 875-0830 • Fax: (317) 875-0837 • (800) 428-4065

MADE IN THE **U.S.A.**

© Rev. 7/2019

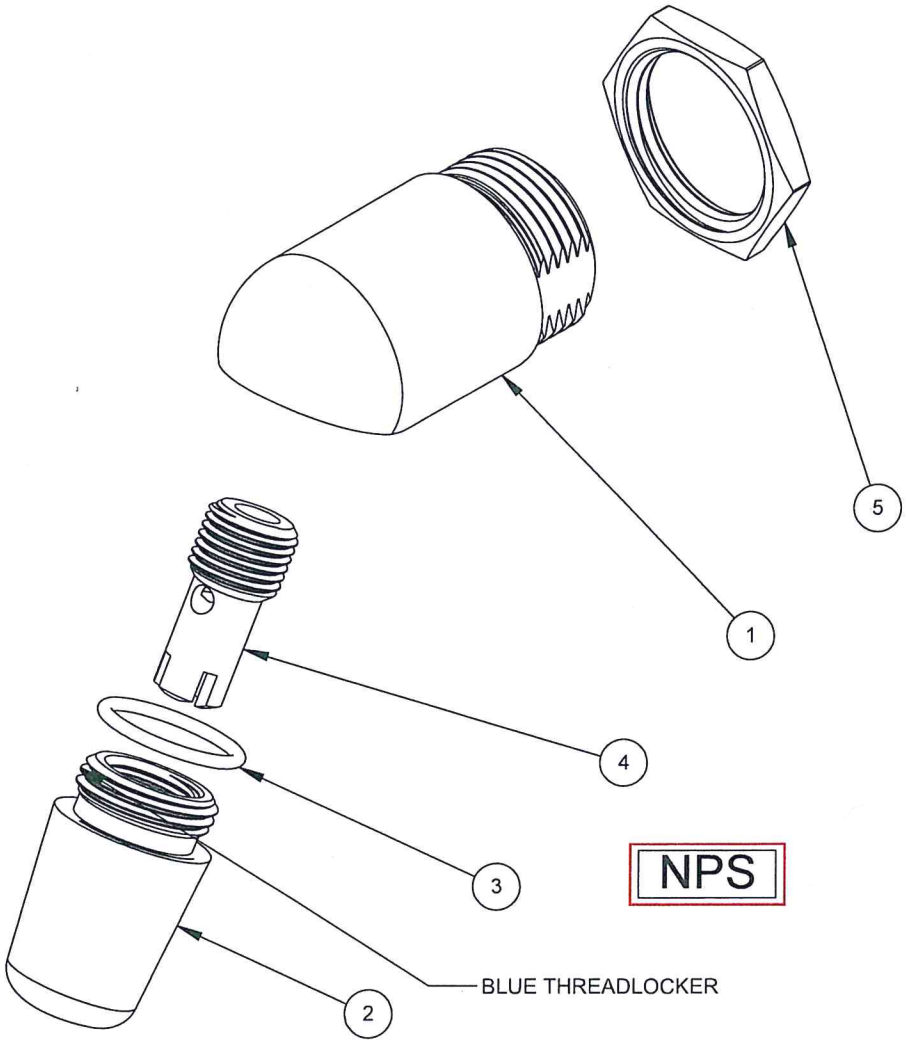

NPS

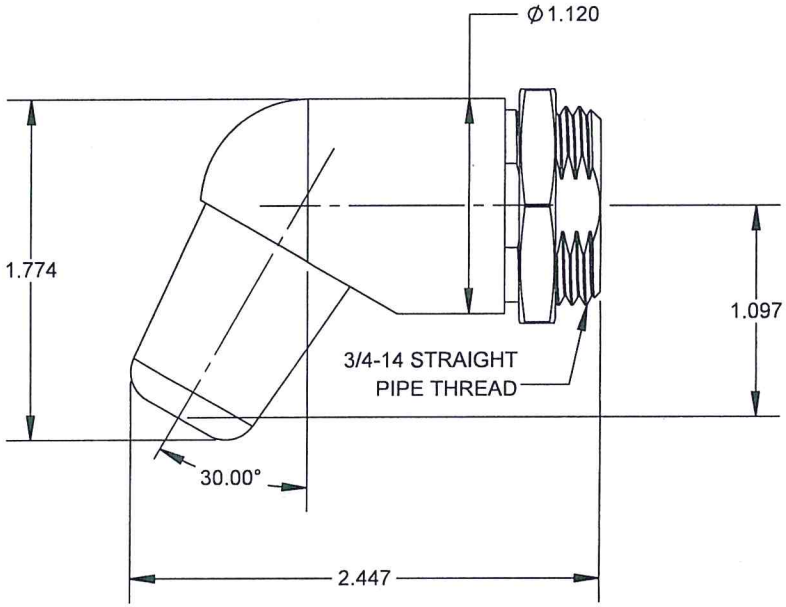

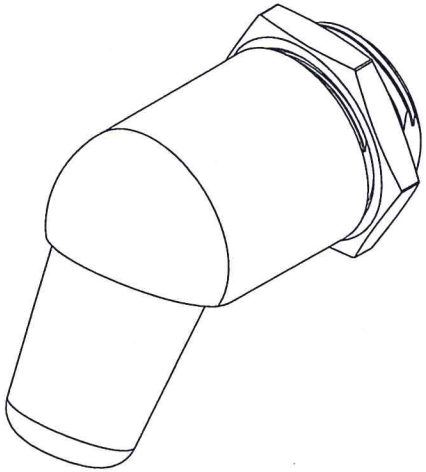

ITEM #	PART #	DESCRIPTION	QTY.
1	380029	SHOWER HEAD BASE - 30 DEG.	1
2	380032	SHOWERHEAD CAP	1
3	600131	O-RING (#017) EPDM NSF61	1
4	380031	SHOWERHEAD INSERT	1
5	600612N	HEXNUT, 3/4"-14 NPSM	1

WILLOUGHBY	Willoughby Industries, Inc. Indianapolis, Indiana	TITLE / DESC. NPS SHOWERHEAD ASSEMBLY, NPS (WSH-7)			PART # 370098	
	TOLERANCES EXCEPT AS NOTED	2 PLCS: ±0.03 3 PLCS: ±0.015 FRACTIONS: ±1/32" ANGLE: ±1°	SIZE: A SCALE: 1:1	MAT'L: REF.:	REVISION A	ORIG.: EEF 2/4/16 REV.: EFF 2/4/16	STANDARD SHEET: 1 OF 1

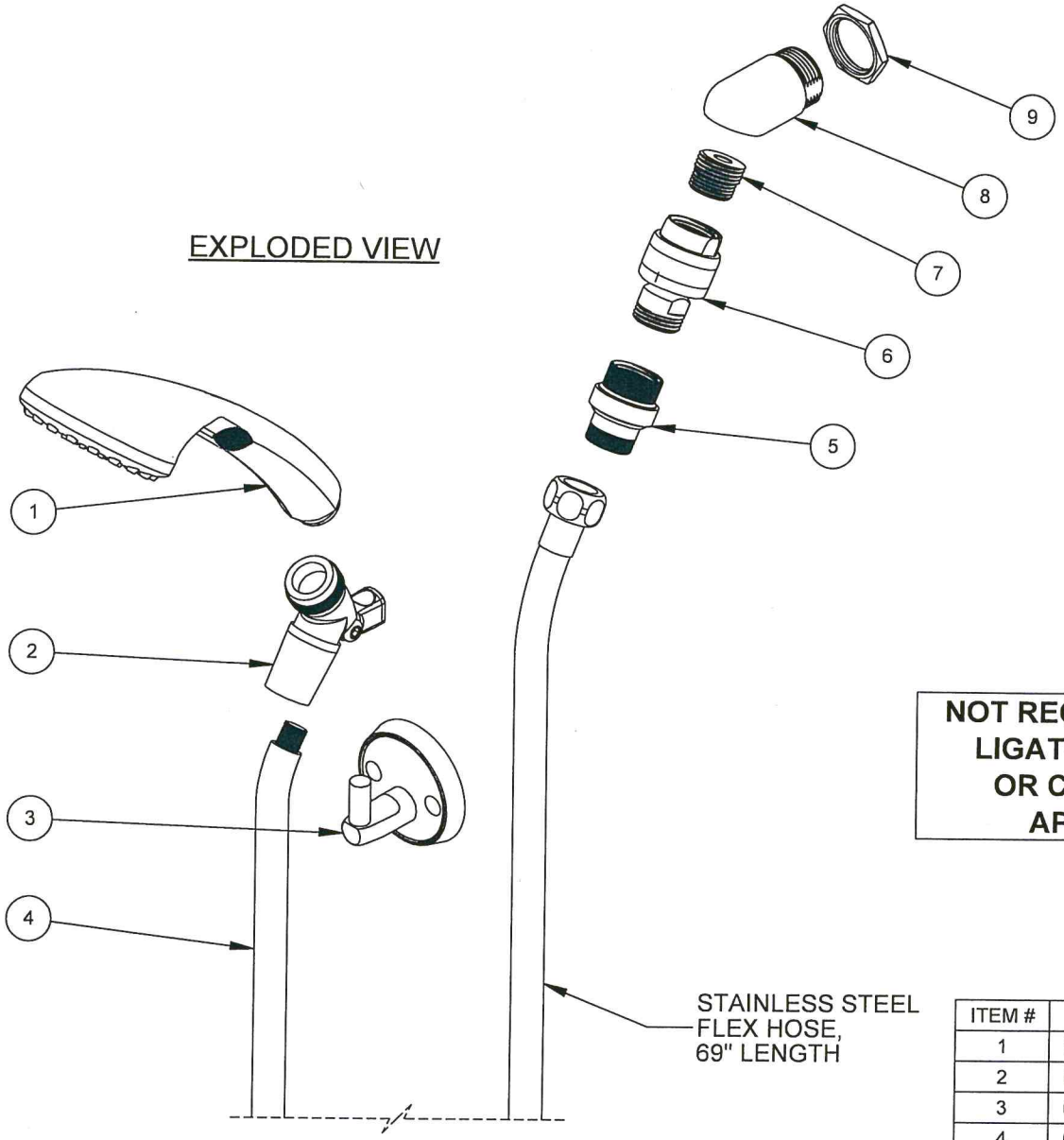

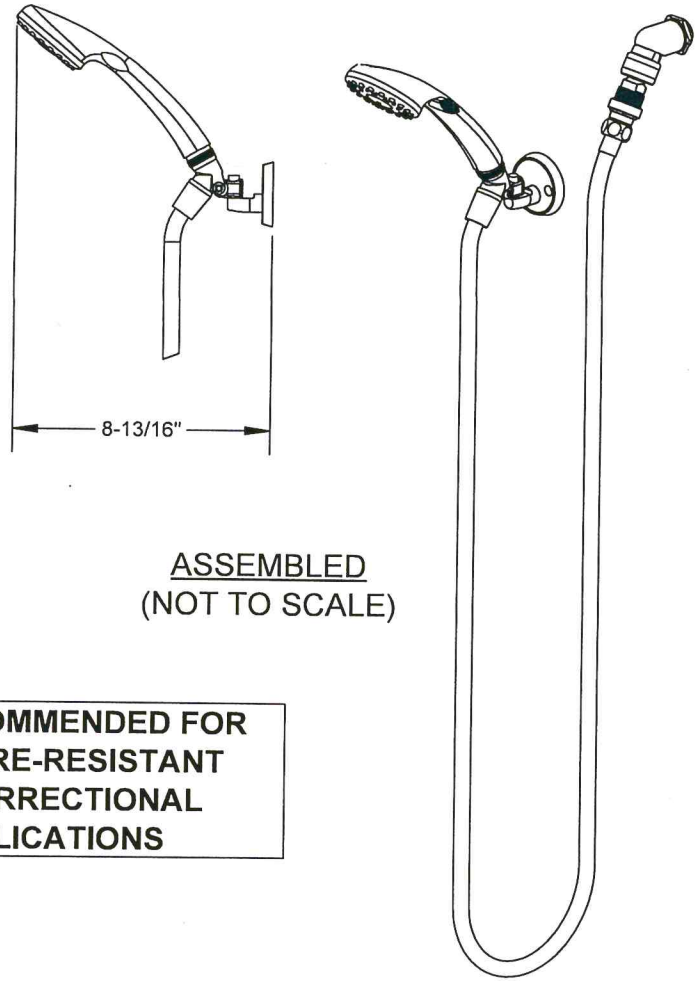

ASSEMBLED
(NOT TO SCALE)

NOT RECOMMENDED FOR LIGATURE-RESISTANT OR CORRECTIONAL APPLICATIONS

ITEM #'S 1, 2, 4, & 5 AVAILABLE AS **P/N: 600692**
HAND HELD FLEXSHOWER ASSEMBLY

ITEM #	PART #	DESCRIPTION	QTY.
1	382461	HAND SHOWER, W/ SHUTOFF	1
2	600676	SWIVEL CONNECTOR HOOK	1
3	600681	WALL MOUNT FX HOOK	1
4	600680	STAINLESS STEEL FLEX HOSE FOR FLEXSHOWER	1
5	600679	QUICK CONNECTOR	1
6	600675	VACUUM BREAKER- FLEXSHOWER	1
7	380004	THREADED SWIVEL ADAPTER	1
8	380029	SHOWER HEAD BASE - 30 DEG.	1
9	600612N	HEXNUT, 3/4"-14 NPSM	1

WILLOUGHBY

Willoughby Industries, Inc.
Indianapolis, Indiana

TOLERANCES EXCEPT AS NOTED: 2 PLCS. ±0.03; 3 PLCS. ±0.01; FRACTIONS ±1/32; ANGLE ±1°

A | 1:3

TITLE / DESC.: (FX-ADA) FLEXSHOWER HEAD, HAND SHOWER W/ QUICK DISCONNECT

PART #: 382461K

MAT'L: AS NOTED, SEE BOM

REF.: P981059D

REVISION: A

ORIG.: MW 2/17

REV.: N. /20

STANDARD

SHEET: 1 OF 1

WILLOUGHBY PART # 382461

Delta Universal Showering

Full Spray Push Button Hand Shower

Model#: 75009WH

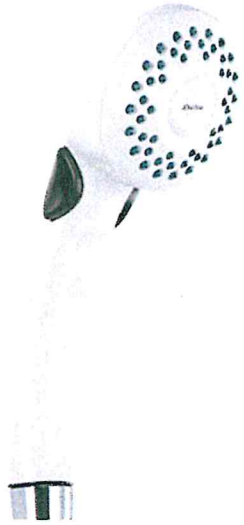

Finish: White

Product Features

- Replacement full spray hand shower with push button
- Push button feature reduces water flow to a trickle
- Rub clean to remove mineral deposits, simply wet, rub and rinse away
- Easy-grip handle for a secure hold
- Soft, rubber Touch-Clean® spray holes allow you to easily wipe away calcium and lime build-up from the spray face of your shower head and hand shower with the touch of a finger

WILLOUGHBY	TITLE: (ICD) INSIDE CAULK DRAIN DETAIL FOR HANDICAP CABINET SHOWERS				DRAWING #: P994085A	
	TOLERANCE: DIMENSIONS ARE +/- 1/4" EXCEPT AS NOTED	MATERIAL: AS NOTED	DRAWN BY: RTS	DATE: 12/22/99	REV: H 4/2/19	STANDARD DWG.
			SCALE: NOT TO SCALE			

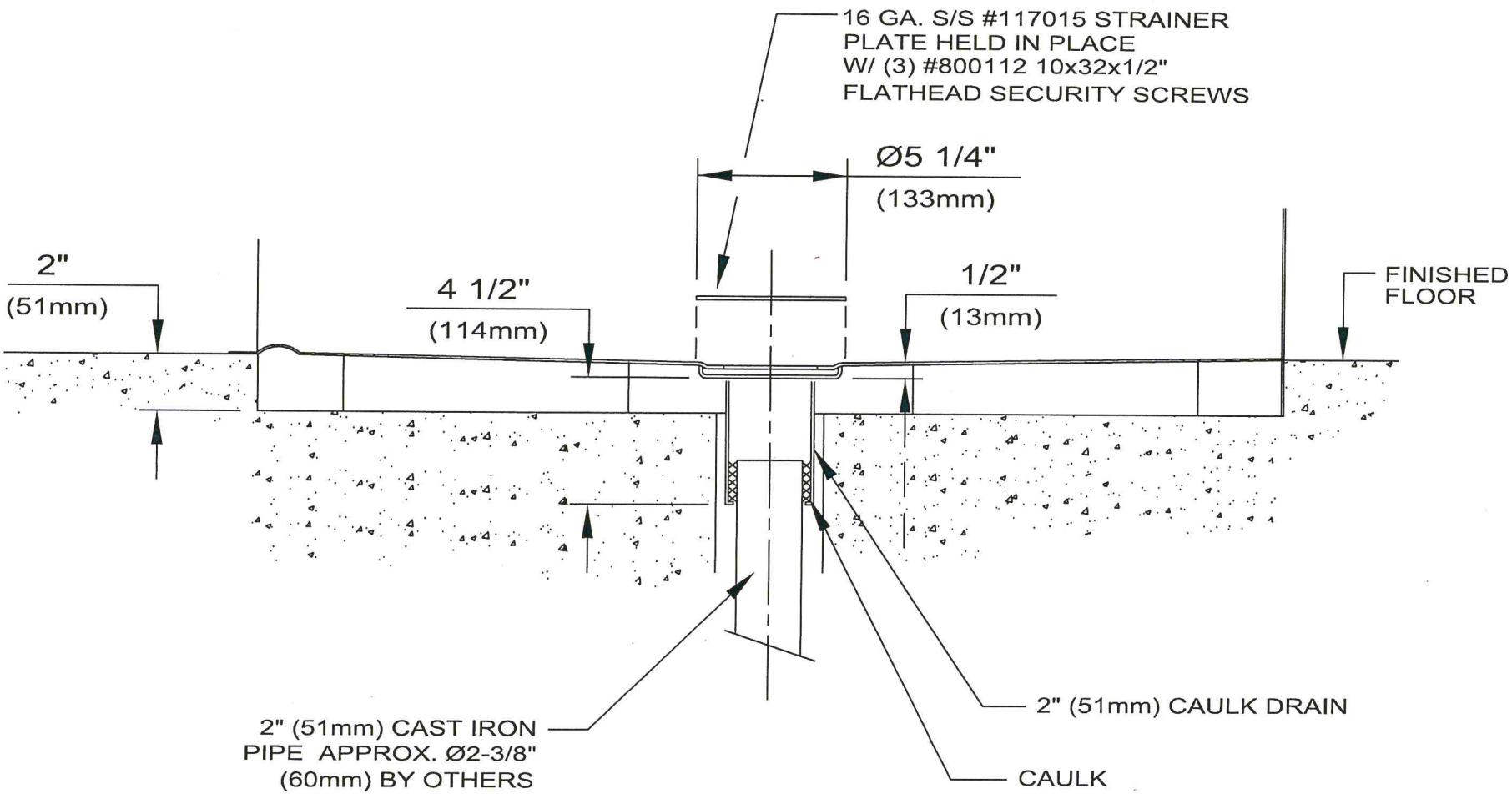

SIDE VIEW

MILLOUGHBY	HANDICAP CABINET SHOWER INSTALLATION DETAIL				P 4027A
TOLERANCE: DIMENSIONS ARE +/- 1/4" EXCEPT AS NOTED	MATERIAL: AS NOTED	DRAWN BY: NAL	DATE: 10/4/2018	REV: A 4/2/19	STANDARD DWG.
		SCALE: NOT TO SCALE			

IN COMPLIANCE WITH A.D.A. 2010*

*FOR ADA COMPLIANCE, THRESHOLD MUST BE RECESSED 2" OR HAVE A RAMP PROVIDED. CONSULT ADA GUIDELINES.

FOR 36" x 36" SHOWER, MINIMUM FLOOR CUT-OUT DIMENSION IS 36 1/4" x 36 1/4" TO RECEIVE SHOWER CABINET

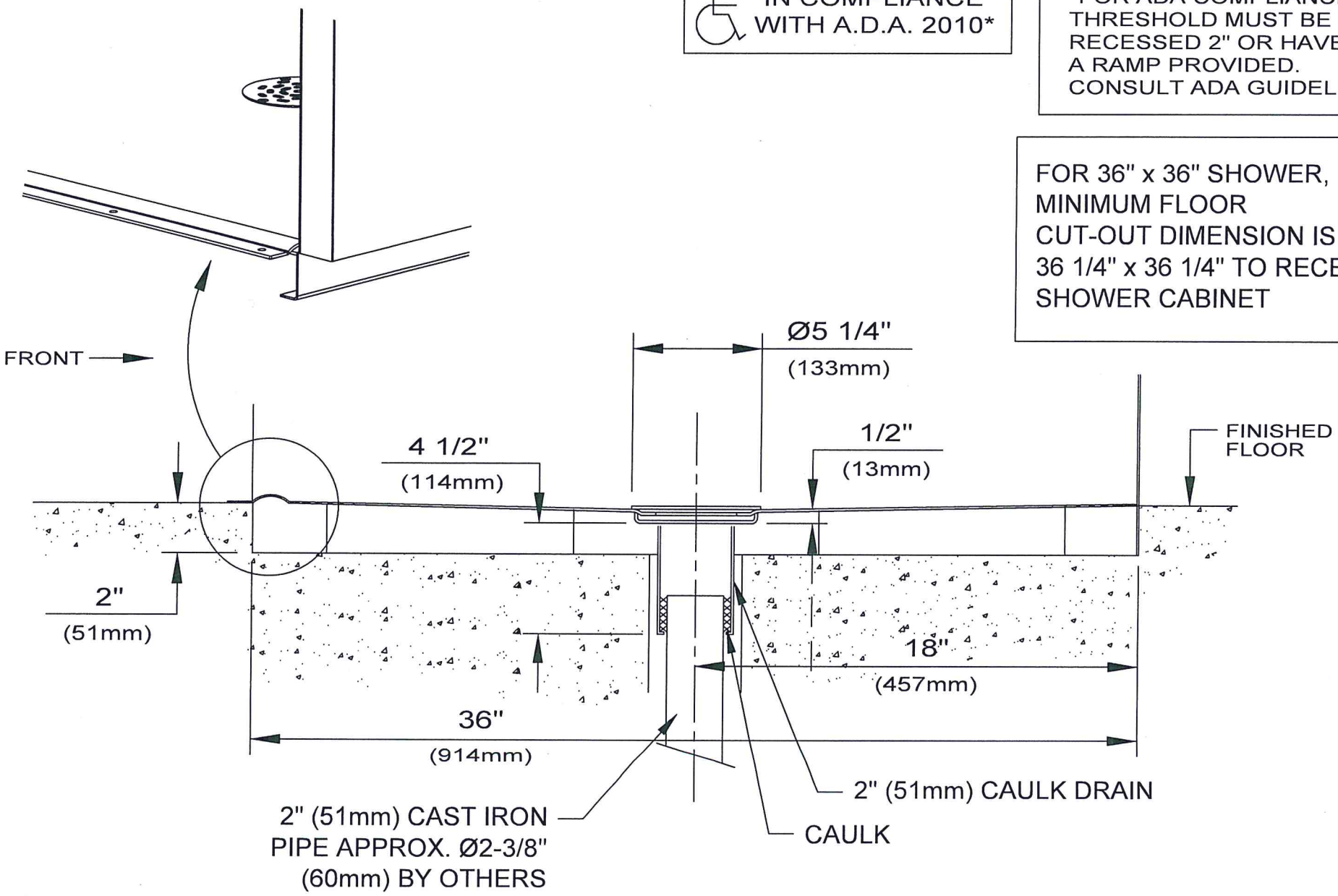

SIDE VIEW

WILLOUGHBY	TITLE: RELEASE TOWEL HOOK TH1 (SA-1745-D), SHOWER STALL				DRAWING #: P961018A	
	DIMENSIONS ARE +/- 1/4" EXCEPT AS NOTED	MATERIAL: N/A	DRAWN BY: E.L.G.	DATE: 4/29/96	REV. #: E 7/27/15	STANDARD DWG.
			SCALE: NONE			

SA-1745-D - THIS LIGATURE-RESISTANT PRESSURE ACTIVATED RELEASE TOWEL HOOK WILL SUPPORT LIGHT CLOTHING AND TOWEL LOADS, HOWEVER, EXCESSIVE LOADS PLACED ON THE HOOK WILL RENDER ITS FUNCTION USELESS.

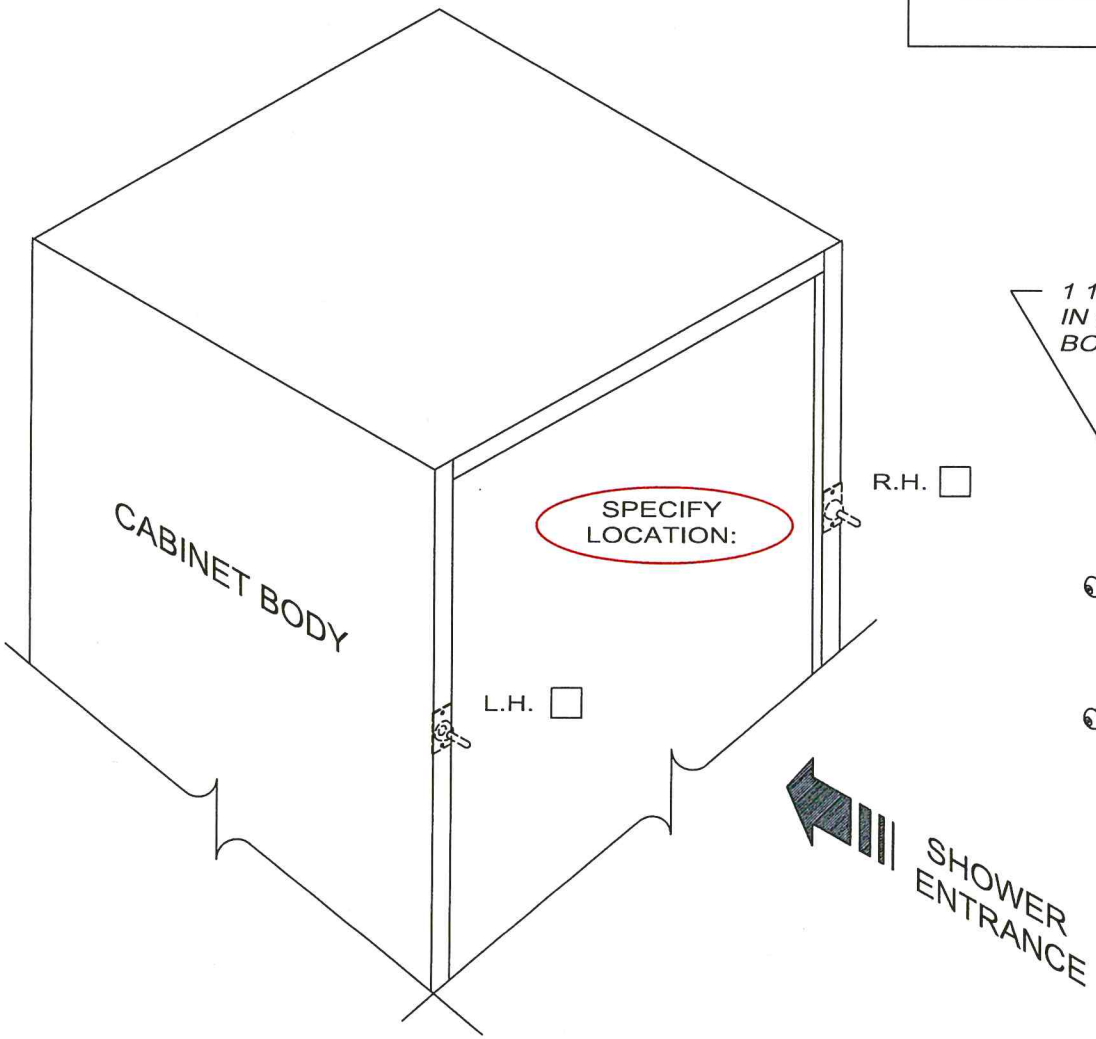

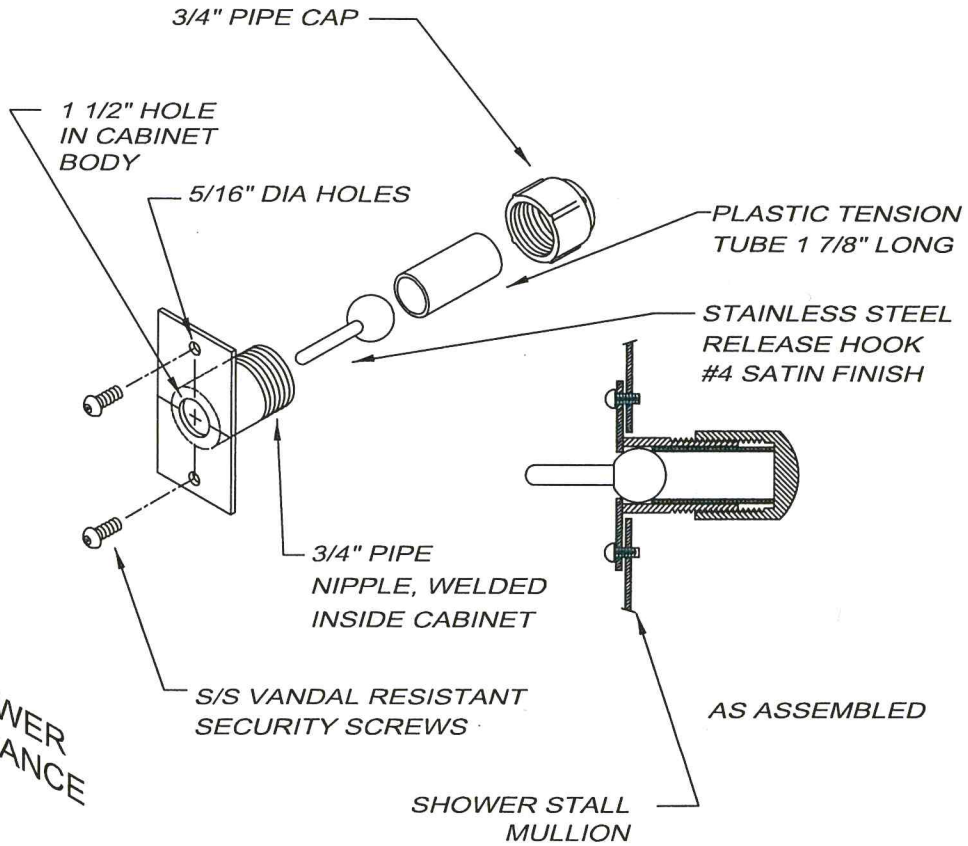

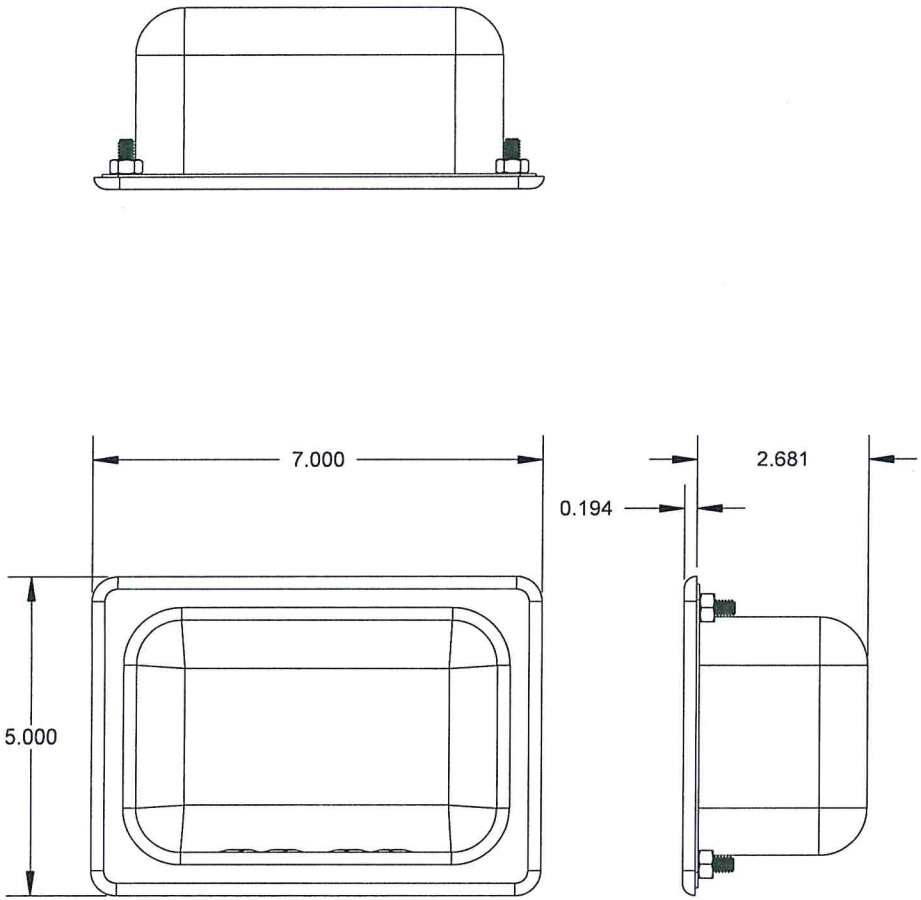

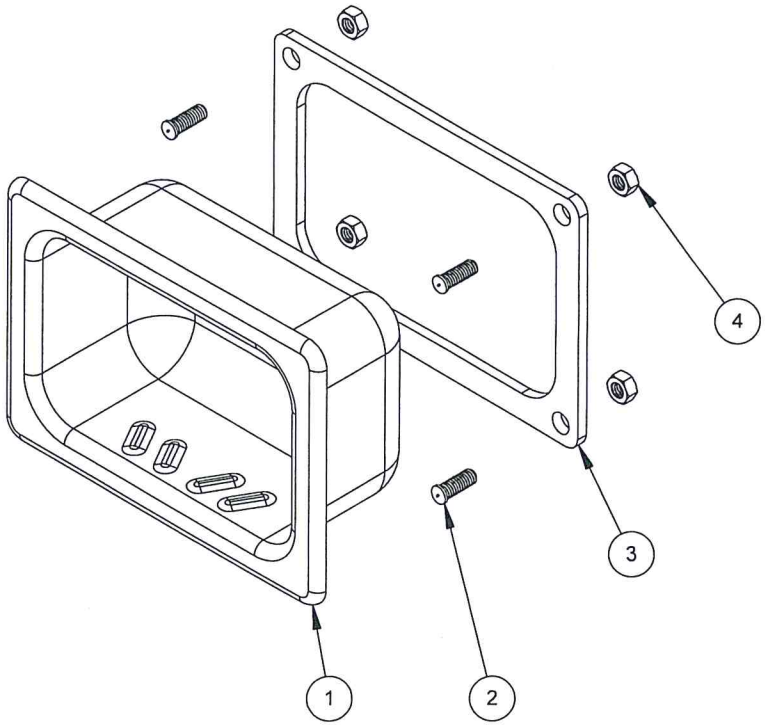

ITEM #	PART #	DESCRIPTION	QTY.
1	200720	SOAP DISH - RECESSED	1
2	800135	WELD STUD, 1/4-20 X 3/4" S/S	4
3	380052N	GASKET, SOAP DISH	1
4	600613N	HEX NUT, 1/4"-20, STAINLESS STEEL	4

WILLOUGHBY	**Willoughby Industries, Inc.** Indianapolis, Indiana	TITLE / DESC.: (RD) RECESSED SOAP DISH ASSEMBLY				PART #: 1745SA-C	
	TOLERANCES EXCEPT AS NOTED	2 PLCS: ±0.03 3 PLCS: ±0.015 FRACTIONS: ±1/32" ANGLE: ±1°	SIZE: A	MAT'L: N/A	REVISION A	ORIG.: EEF 1/15/16	STANDARD
			SCALE: 1:3	REF.:		REV.: EEF 1/15/16	SHEET: 1 OF 1

Willoughby Industries - *Security Products*

WILLOUGHBY

FSS Series
Folding Shower Seat

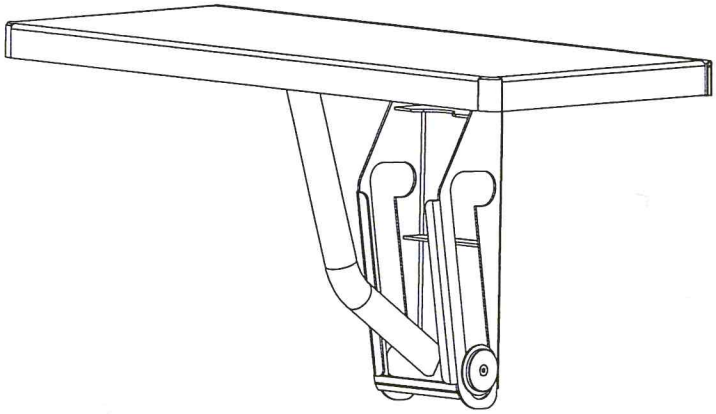

FSS folding shower seat shall be fabricated from Type 304 stainless steel. Seating surface and flanges polished to a #3 satin finish. Folding shower seat provides sturdy seating for users of handicapped shower facilities and can be easily folded up when not in use.

Wall anchors and fasteners by others.

IN COMPLIANCE WITH A.D.A. 2010

NOTE: FOLDING SEAT MUST MOUNT 1" OUT FROM BACK WALL TO AVOID GRAB BAR INTERFERENCE

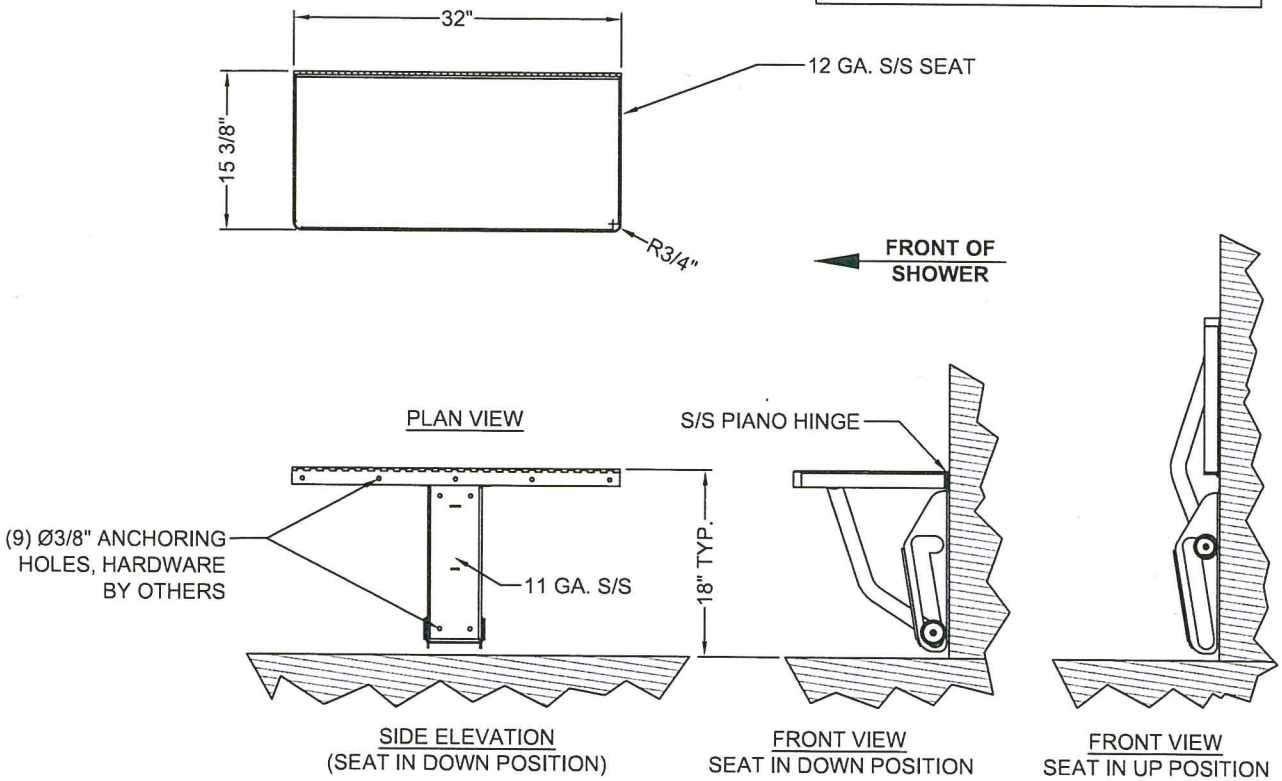

WARNING: Cancer and Reproductive Harm
- www.P65Warnings.ca.gov

visit our website at www.willoughby-ind.com
5105 West 78th Street • Indianapolis, IN. 46268
(317) 875-0830 • Fax: (317) 875-0837 • (800) 428-4065

MADE IN THE **U.S.A.**

© Rev. 6/2020

Willoughby Industries - *Security Products*

WILLOUGHBY

GB Series
Grab Bars

✓	MODEL NUMBER	GRAB BAR LENGTH ("X")
	GB18	18"
✓	GB24	24"
	GB30	30"
	GB36	36"
	GB42	42"
	GB48	48"
✓	GB3318	33" X 18"

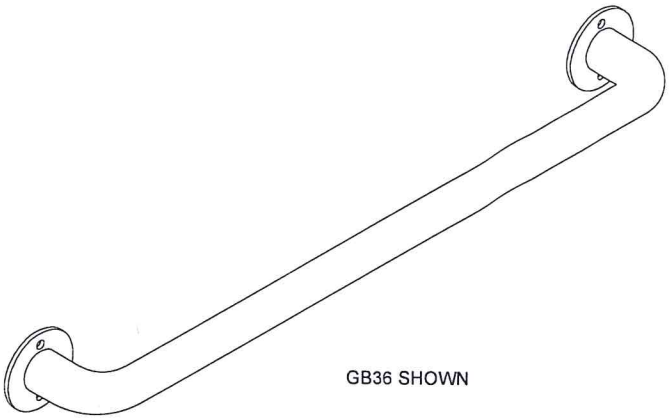

GB36 SHOWN

GB _____ grab bars shall be fabricated from Type 304 stainless steel. Exposed stainless steel surfaces shall be polished to a #3 satin finish. Standard flange configuration is exposed. Grab bar fasteners and wall anchors by others.

Various configurations are available.

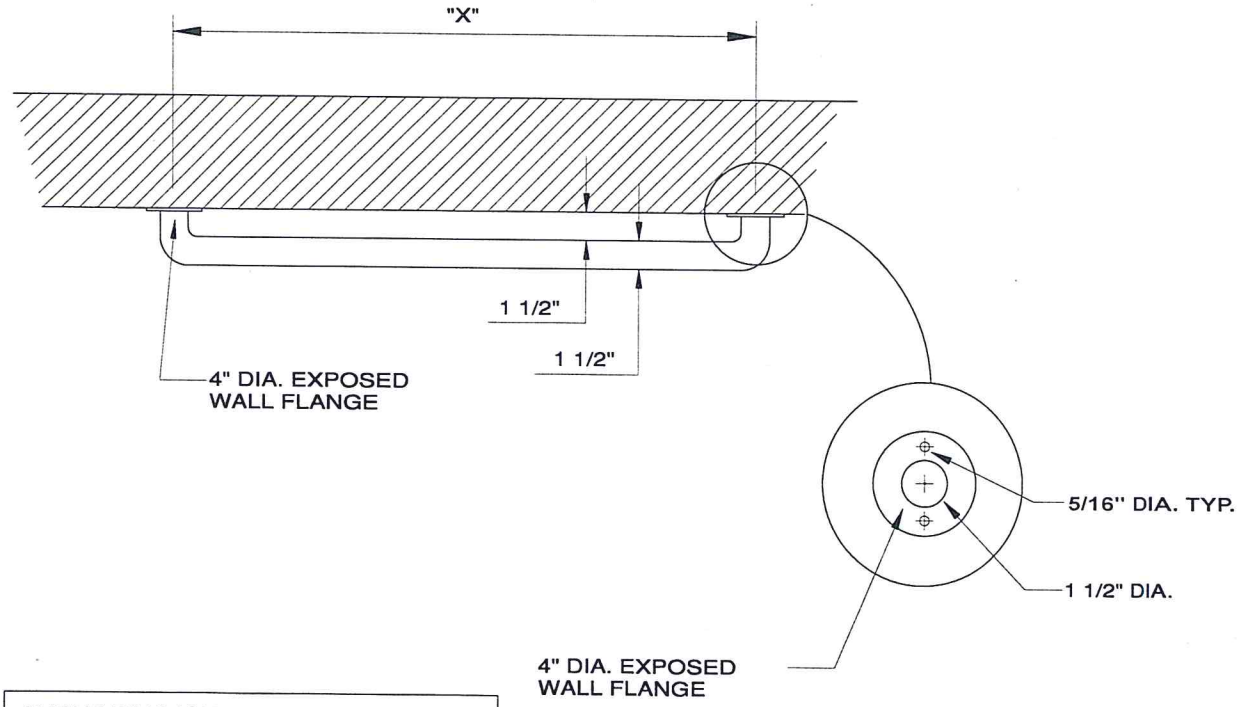

ANCHORING MATERIAL BY OTHERS

WARNING: Cancer and Reproductive Harm

- www.P65Warnings.ca.gov

visit our website at www.willoughby-ind.com
5105 West 78th Street • Indianapolis, IN. 46268
(317) 875-0830 • Fax: (317) 875-0837 • (800) 428-4065

MADE IN THE **U.S.A.**

© Rev. 5/2018

Willoughby Industries, Inc.
Stainless Steel and Solid Surface
Plumbing Fixture Products and Accessories

WILLOUGHBY

WARRANTY

With respect to goods manufactured by Willoughby, Willoughby warrants the goods to be free from defects in materials and workmanship under normal use and service for one year from the date of shipment; and Willoughby will replace or repair, at its option, any goods which are found defective in material or workmanship within said one-year period from date of shipment upon notification by Buyer identifying each and every defect. Willoughby's obligation with respect to such goods shall be limited to replacement or repair, F.O.B. Indianapolis, Indiana, and in no event shall Willoughby be liable for consequential or special damages, or for transportation, installation, adjustment, replacement or other expenses which may arise in connection with such goods. Any misuse or abuse of the goods voids this limited warranty.

THIS WARRANTY IS EXPRESSLY MADE IN LIEU OF ANY AND ALL OTHER WARRANTIES, EXPRESS OR IMPLIED, INCLUDING THE IMPLIED WARRANTIES OF MERCHANTABILITY AND FITNESS FOR A PARTICULAR PURPOSE.

5105 West 78th Street, Indianapolis, IN 46268
(317) 875-0830 • (800) 428-4065 • fax (317) 875-0837
willoughby@willoughby-ind.com • www.willoughby-ind.com

1. ACCEPTANCE. This order is accepted subject to the following terms and conditions. Conditions stated by buyer in any other communication, prior or subsequent hereto, shall not be binding on Willoughby Industries (hereafter referred to as "Willoughby") if in conflict with or in addition to any of the provisions of these terms and conditions, unless expressly agreed to in writing by Willoughby. Unless otherwise expressed in writing, placement of any order by Buyer or acceptance by Buyer of any goods provided hereunder shall constitute acceptance of the terms and conditions stated herein.

2. ALTERATION OF TERMS. Changes in the terms and conditions herein shall not be binding on Willoughby unless made in writing and executed by a duly authorized officer of Willoughby; and any representations given by any sales representative, employee or agent of Willoughby inconsistent with those Terms and Conditions shall not be binding on Willoughby.

3. PAYMENT. Upon tender of delivery by Willoughby of goods or merchandise to a carrier for transportation, payment is due from Buyer net 20 days unless otherwise stated. All past due accounts are subject to interest thereon at the rate of 12% per month, and Buyer shall reimburse Willoughby for any costs of collection incurred in collecting any past due sums, including court fees, out-of-pocket expenses, and attorneys' fees.

4. SHIPMENT, RISK OF LOSS AND INDEMNIFICATION. Buyer shall accept the goods F.O.B. Willoughby's facility, Indianapolis, Indiana. Method and route of shipment are at Willoughby's discretion, unless Buyer supplies explicit instructions otherwise. Willoughby shall tender delivery of all goods to a carrier for transportation to Buyer's designated shipment destination, but all costs of transportation shall be borne by Buyer (unless specified otherwise on the face hereof), and all risk of loss shall pass to Buyer when the goods are made available to the carrier at Willoughby's facility including all risk of loading and transportation. All claims for loss, damage or delay against the carrier must be made by Buyer.

5. DELAYS AND DAMAGES. Willoughby shall endeavor as far as practicable to make deliveries in accordance with this order, but if for any cause Willoughby shall fail to make such deliveries or fail to do so within the time stated in the order, or shall cancel any such orders, Willoughby shall not be liable for any loss or damage resulting from any such failure or delay in delivery or from cancellation of any order or for loss of use or loss of profits.

6. INSPECTION. Buyer shall have the right to inspect all goods tendered for delivery at the place of destination before delivery is considered complete.

7. REJECTION OF NONCONFORMING GOODS. Any rejection of goods for being nonconforming must be made within ten (10) days after their delivery at the place of destination by immediately notifying Willoughby and confirming in writing the rejection. Such notification shall identify each and every alleged nonconformity of the goods, and describe that portion of the shipment being rejected. Willoughby shall then respond with instructions as to the disposition of the goods. If Buyer shall fail to give such notice or if Buyer uses the goods in any manner inconsistent with the rights of Willoughby, the goods shall be deemed to conform with the terms of the contract, and Buyer shall be bound to accept and pay for the goods in accordance with the terms hereof.

8. CANCELLATION. An order accepted by Willoughby may be cancelled by Buyer only upon the written approval of Willoughby and upon terms that indemnify Willoughby against loss.

9. NO WARRANTY AS TO RESALE ITEMS. With respect to resale items not manufactured by Willoughby. WILLOUGHBY MAKES NO WARRANTIES, EXPRESSED OR IMPLIED, INCLUDING THE IMPLIED WARRANTIES OF MERCHANTABILITY AND FITNESS FOR A PARTICULAR PURPOSE AND SHALL NOT BE LIABLE FOR ANY LOSS OR DAMAGE, DIRECTLY OR INDIRECTLY, ARISING FROM THE USE OF SUCH RESALE ITEMS OR FOR CONSEQUENTIAL DAMAGES. The Buyer's sole warranty shall be given by the original manufacturer of said resale items.

10. LIMITED WARRANTY AND LIMITATION OF REMEDY AND DAMAGES FOR GOODS MANUFACTURED BY WILLOUGHBY. With respect to goods manufactured by Willoughby, Willoughby warrants the goods to be free from defects in materials and workmanship under normal use and service for one year from the date of shipment; and Willoughby will replace or repair, at its option, any goods which are found defective in material or workmanship within said one-year period from date of shipment upon notification by Buyer identifying each and every defect. Willoughby's obligation with respect to such goods shall be limited to replacement or repair. F.O.B. Indianapolis, Indiana and in no event shall Willoughby be liable for consequential or special damages, or for transportation, installation, adjustment, replacement or other expenses which may arise in connection with such goods. Any misuse or abuse of the goods voids this limited warranty. THIS WARRANTY IS EXPRESSLY MADE IN LIEU OF ANY AND ALL OTHER WARRANTIES, EXPRESSED OF IMPLIED, INCLUDING THE IMPLIED WARRANTIES OF MERCHANTABILITY AND FITNESS FOR A PARTICULAR PURPOSE.

11. INDEMNIFICATION. Buyer shall indemnify and hold harmless Willoughby and its agents from any claims, damages or expenses, including reasonable attorneys' fees, arising or alleged to arise in whole or in part from (1) any asserted deficiencies or defects in the goods caused by any alteration thereof made by Buyer with or without Willoughby's consent or any improper handling or storage by Buyer, (2) any breach of any terms stated herein, or (3) any act or omission of Buyer, irrespective of whether or not such claim, damage or expense is caused or alleged to be caused, in part by Willoughby's joint, several or comparative, but not sole negligence, breach of contract or warranty, or any other breach of duty of Willoughby, whether asserted under a strict or other product liability theory or any other legal theory.

12. NON-PERFORMANCE. Neither party hereto shall be liable to the other for failure to perform its obligations hereunder, in whole or in part, when performance is prevented by flood, drought, fire or any other casualty, war, riot, insurrection, acts of God, restrictions or interferences by any government or governmental agency, strike, work stoppage or slowdown, and any causes beyond the control of the party so failing to perform.

13. ARBITRATION. Any claim or controversy arising out of or relating to this agreement shall be settled finally and exclusively before a single arbitrator in Indianapolis, Indiana, under the Uniform Arbitration Act. In Code § 34-4-2-1, the Federal Arbitration Act. 9 U.S.C. § 1, and the auspices of the American Arbitration Association. All costs and expenses of the arbitration, including actual attorneys' fees, shall be allocated among the parties according to the arbitrator's discretion. Proceeding to arbitration and obtaining an award thereunder shall be a condition precedent to the bringing or maintaining of any action in any court with respect to any dispute arising under this agreement, except for the institution of a civil action to maintain the status quo during the pendency of any arbitration proceeding. Any and all actions which may be brought in court for any claim or controversy arising under this agreement shall be filed and maintained only in a state or federal court of appropriate jurisdiction sitting in the State of Indiana.

14. SEVERABILITY. In the event that any provision of these Terms and Condition shall be found to be invalid or unenforceable, the remaining portions of these Terms and Conditions shall remain in full force and effect as if the invalid or unenforceable portion were not a part hereof. Should the severance of any portion of these Terms and Conditions affect a material right or obligation of a party, the party so affected may terminate this agreement.

15. NO WAIVER. The failure to enforce at any time any of the provisions, rights or elections provided in these Terms and Conditions, irrespective of any previous action or proceeding taken by it, shall in no way be considered (i) a waiver of those or any other provisions, right or elections (ii) to affect the validity of this Agreement, or (iii) to preclude or prejudice the exercise of the same or any other provision, right or election it may have hereunder.

16. CONTRACT. This order and these Terms and Conditions shall be a contract made and entered into in the State of Indiana and shall be governed by the laws of the State of Indiana; notwithstanding any state's choice of law rules to the contrary.