MUNICIPALITY OF ANCHORAGE
STANDARD SPECIFICATIONS

DIVISION 80
TRAFFIC SIGNALS AND ILLUMINATION

STANDARD CONSTRUCTION SPECIFICATIONS
FOR TRAFFIC SIGNALS AND ILLUMINATION
DIVISION 80
INDEX

STANDARD CONSTRUCTION SPECIFICATIONS FOR INSTALLATION AND REMOVAL OF TRAFFIC SIGNALS AND ILLUMINATION DIVISION 80

SECTION 80.01 GENERAL

Article 1.1 Scope of Work

Work shall consist of furnishing and installing, modifying, removing or salvaging one or more traffic signal systems, flashing beacon systems, illumination systems, sign illumination systems, traffic count stations, electrical equipment on structures, falsework lighting, partial installations for future systems, or combinations thereof, all as required by the Drawings, and as specified. All necessary labor and equipment to provide fully functioning traffic signals, intersection lighting, or roadway illumination is included.

Prior to installation of foundations, junction boxes, and conduits; Contractor shall locate and protect all new and existing underground utilities; including, but not limited to, pipelines, signal systems, thaw wires, lighting systems, storm drain, sanitary sewers, water systems, and telephone, cable television, and electrical cables. Not all of the existing utilities may be present or shown on the Drawings. Contractor shall adjust foundation, junction box, or conduit location if conflict exists with either existing utilities or proposed improvements. No additional monies are paid or owed to Contractor for the adjustment.

Materials furnished shall be new, except such used materials as may be specifically provided for on the Drawings or in the Special Provisions. Where an existing system is to be modified, the existing material shall be reused on the project, or disposed of as shown in the Drawings, or specified in the Special Provisions.

All systems shall be complete and in operation with all materials in conformance with Drawings, Specifications and the manufacturer's specifications and recommendations, at the time of final acceptance.

Article 1.2 Regulations and Codes

All material, and workmanship where applicable, shall conform to the standards of the Underwriters Laboratories, Inc., the National Electrical Code, and the National Electrical Safety Code together with local amendments. Within this Division, the term "Code" shall mean the National Electrical Code, and the National Electrical Safety Code together with local amendments.

Where applicable, all electrical equipment shall conform to the standards of the National Electrical Manufacturers Association.

The 1994 Edition of the “Standard Specifications for Structural Supports for Highway Signs, Luminaires and Traffic Signals” published by the American Association of State Highway and Transportation Officials (AASHTO) shall be referred to in this Division as the 1994 AASHTO design criteria. Similarly, the 2001 Edition AASHTO “Standard Specifications for Structural Supports for Highway Signs, Luminaires and Traffic Signals” shall be referred to in this Division as the 2001 AASHTO design criteria.

Article 1.3 Equipment List(s) and Drawings

A. The Contractor shall submit for review and approval, within thirty (30) days following award of the Contract, eight (8) collated copies of a portfolio of equipment and materials which he proposes to install. The portfolio(s) shall consist of a table of contents which includes each item's intended use(s) and the following:

1. For materials on the Approved Products List: a description that includes product name, manufacturer, model or part number, and the conditions listed for approval.
2. For materials not on the Approved Products List: catalog cuts that include the manufacturer's name, type of product, size, model number, conformance specifications, and supplemented by other data as may be required, including manufacturer's maintenance and operations manuals, or sample articles.
3. A wind stress certificate from the manufacturer of poles, signal mast arms, and luminaire arms. Contractor shall submit to the Engineer for approval the Wind Stress Certificate that includes the signed stamp of a professional engineer registered in the State of Alaska; and a statement that indicates that the poles and mast arms meet the wind and mast arm loading requirements specified in Section 80.05, Article 5.1 - General.
4. Contractor shall submit to the Engineer for approval the Materials Certifications for all lighting poles, signal poles, mast arms, connector bolts and anchor bolts, indicating that the steel and galvanizing conform to the requirements in this Division.

The Municipality will not be liable for any material purchased, labor performed, equipment used, or delay to the Work before all equipment and materials have been reviewed and approved.

B. Three (3) paper copies and two (2) electronic copies, in Adobe pdf format and AutoCAD v2006 or later format of traffic controller cabinet schematic wiring diagrams shall be submitted at the time the controllers are delivered for testing, or if ordered by the Engineer, prior to purchase. This diagram shall list all equipment installed in each cabinet and show in detail all circuits, parts, and schematic wiring. Contractor shall also provide at this time, one (1) reproducible and one (1) electronic set in Adobe pdf format of Operation and Maintenance manuals and wiring diagrams of any cabinet equipment utilized. These manuals shall show in detail all circuits and parts. Such parts shown thereon shall be identified by name or number and in such a manner as to be readily interpreted.

C. The Contractor shall prepare five (5) complete sets of red lined as-built plans which shall be kept current with the construction. These as-built plans shall detail all construction changes made to the Drawings and also include the following information on each appropriate drawing:

1. Location and depth of conduit runs.
2. Station and offset of all junction boxes.
3. Heights of signal faces and overhead signs.

Copies of such as-built plans shall be furnished at least twice a month during construction so that they may be reviewed for accuracy and completeness. The Contractor shall furnish any additional information required to clarify the as-built plans and shall correct all discrepancies. Progress payment for the signal and illumination Work completed shall not be made until accurate as-built plans reflecting the construction progress have been reviewed and deficiencies corrected.

D. Prior to final inspection of the Work, Contractor shall submit five (5) complete sets of Record Drawings to the Engineer. The Engineer will deliver one (1) copy each to Project Management & Engineering; Traffic Department, Signals Section; Traffic Signal Electronics Shop; Maintenance & Operations, Street Light Maintenance Supervisor; and attach the appropriate sheets of the fifth set in clear envelopes to the inside of each load center.

Article 1.4 Warranties, Guarantees and Instruction Sheets

Manufacturers' warranties, guarantees, instruction sheets and parts furnished with materials used in the Work shall be delivered to the Engineer.

For equipment brands and models not currently in use within the Municipality of Anchorage, a manufacturer's representative shall be present to supervise the turn on and adjustment of the signal system. In addition, the representative shall provide one workday of continuous instruction and familiarization in the operation and maintenance of the signal system.

Article 1.5 Maintaining Existing and Temporary Electrical Systems

The Contractor shall maintain the traffic signal and lighting systems, including payment of electrical costs, from the time of the Notice to Proceed until the time of final acceptance except during any authorized stoppages when the Municipality of Anchorage shall assume maintenance. Temporary replacement equipment furnished by the Contractor shall be compatible with existing equipment used in the M.O.A. and approved by the Engineer. Representatives of the Contractor and the Owner shall inspect the project prior to the winter shutdown and prior to spring start-up to ascertain those items that need repair and determine responsibility for the repairs. If the project includes traffic signal Work, Traffic Signal personnel shall be included in the inspection.

The existing Traffic Signal installation may not be shutdown between 7:00 and 8:30 a.m. or 3:00 and 6:00 p.m. weekdays.

The local traffic enforcement agencies and Traffic Department, Signals Section shall be notified prior to any operational shutdown of a traffic signal system.

The Contractor and the Traffic Signal personnel shall do a walk-through inspection of the existing traffic signal system prior to commencing Work.

The Contractor shall provide temporary signalization. At no time shall a signalized intersection operate in an unsignalized mode, except for shutdown due to change over from the existing system to a temporary system, and from the temporary system to a permanent system. Temporary signal system shutdowns shall be limited to periods during normal working hours as specified in this Section, during which flag control shall be used.

The temporary signal system plan shall be submitted to and approved by the Municipal Traffic Engineer or assigned designee prior to implementation. The temporary signal plan shall equal or exceed the system being replaced or modified. That is, the plan shall not downgrade the number of signal heads, signal phases, pedestrian push buttons, emergency preemption detectors, traffic signal communications, etc. The temporary signal system plan shall also include the layout of the temporary intersection. The complete plan shall include intersection geometrics, lane widths, and auxiliary lane pocket lengths.

No vehicle detection will be required in a temporary system, unless called for in the Drawings and Specifications or specified by the Traffic Department. The Contractor shall coordinate all Signal Work with the Traffic Signal Section or the assigned designee at 343-8355.

The Contractor shall be responsible for maintaining any span wire temporary signal installed. The Traffic Department will not assume maintenance responsibility for span wire systems.

The Contractor shall obtain Traffic Department approval prior to turning any maintenance responsibilities over to the Traffic Department, including any maintenance required during Winter Shutdown.

The Contractor shall furnish and install all materials and miscellaneous hardware required to provide a functional traffic signal system. All materials shall conform to the requirements of the Drawings and Specifications. Temporary equipment shall be compatible with existing equipment used in Anchorage.

The temporary signal system may consist of any combination of the following:

1. The existing systems,
2. Relocation of component parts,
3. Guyed wood poles, or
4. Any portion of the permanent signal system.

Traffic signals may be suspended from messenger cables provided that they are mounted by standard span wire hangers and secured with a second cable (tether wire) to prevent misalignment in the wind. Messenger cables shall be at least three-eighths inch (3/8”) O.D. “High Tensile” grade cable. Tether wire shall be one-eighth inch (1/8”) O.D. steel cable installed with a minimum ground clearance of nineteen feet (19’). All signal faces shall be equipped with backplates and visors. The signal faces of each phase with two or more faces shall be energized using two (2) circuits, with each circuit wired with IMSA 20-1 signal cable. Splices shall be made only at the terminal blocks in the signal faces. Sufficient signal cable slack shall be left at each pole to provide for drip loops and to allow realignment of each signal head.

Whenever a pole of the permanent signal system is included in a span wire signal system, the Contractor shall guy the pole and provide protective collars to prevent chafe damage. Poles with breakaway bases shall not be included in a span wire supported signal system.

The Contractor shall provide illumination at all locations with preexisting lighting and at all intersections where temporary traffic signalization is specified to be provided.

The temporary facilities shall be provided during the life of the Contract on all roadways open to traffic within project limits. The temporary lighting systems shall be operational by sunset on the same day the replaced system is retired, or the roadway is opened to traffic.

A plan for each temporary lighting system shall be submitted to and approved by the Engineer prior to implementation. The temporary lighting plan shall equal or exceed the system(s) being replaced or modified. At intersections, the temporary system shall include a luminaire located on the far right for each through street approach and installed adjacent to the through street radius returns. The through street is the street with the vehicular right of way; both streets shall be considered through at signalized intersections and four-way stops.

The Contractor shall furnish and install all materials and miscellaneous hardware required to provide a functional lighting system including electrical load centers. All materials shall conform to the requirements of the Drawings and Specifications, except that the branch conductors may be triplex aluminum with messenger cable if they are installed overhead. Illumination conductors shall be sized so that the voltage at the most remote luminaire is not less than the minimum required for the ballast as recommended by the manufacturer. The Contractor shall install intermediate conductor and supports to energize luminaires at locations without electrical service.

Luminaires used in the system may be the existing fixtures or new fixtures with a light distribution compatible with the proposed lighting configuration.

The temporary lighting systems may consist of any of the following lighting pole types, or combinations thereof, provided the luminaires have a minimum of thirty feet (30') mounting height. Mounting height is the difference in elevation between the luminaire retractor and the edge of traveled way at the same station. The existing poles may be reused if they are not utility owned. Any pole of the permanent lighting and temporary signal systems and any Contractor-supplied poles may be wood and shall meet 1994 AASHTO design criteria for one-hundred-mile-per-hour (100 mph) winds with gusts to one hundred thirty miles per hour (130 mph). All poles, except traffic signal poles, installed within the clear zone shall be provided with FHWA approved slip bases, transformer bases, or frangible couplings.

The load centers to power the temporary lighting and signal systems may be the permanent installations, the existing installations, or temporary installations. The existing load centers may be used only if they are scheduled to remain intact until completion of the project, and reused only if they are approved. The Contractor shall provide approved temporary load centers with photoelectrically-controlled lighting circuits whenever a load center is unavailable for use, or when an existing load center that is not approved is retired due to conflict with the Work. An approved load center is any load center UL labeled as Service Equipment, or UL labeled as Industrial Control Equipment and marked "suitable for use as service equipment." The Contractor shall provide all Work to modify these load centers as required to provide functional temporary lighting and signal systems, and to install them completing all Work in accordance with the NEC.

Once the Contractor commences Work on the project, he shall provide all maintenance for the existing electrical facilities. The Municipality will pay for the electrical power for

the above-mentioned electrical systems. The above maintenance does not include any prior damage such as burned out lamps, non-operative detection or other malfunctioning equipment. The Contractor shall present written documentation of all non-functioning and malfunctioning electrical equipment before commencing Work on the project. This malfunctioning equipment shall be inspected jointly by personnel from the Engineer's staff and the Contractor. In the event the Engineer does not receive notice in writing and the Contractor begins Work on the project, this will suffice as evidence that all equipment is functional and operational.

The Contractor shall furnish the Engineer with the name and phone number of the person responsible for maintaining existing and temporary electrical facilities. Repair work shall commence within one hour of notification for traffic signal systems.

The exact location of existing conduit runs, direct burial cable, pull boxes, and all underground utilities shall be ascertained by the Contractor before using equipment that may damage such facilities or interfere with any system.

Where roadways are to remain open to traffic and existing lighting systems are to be modified, the lighting systems shall remain in operation and the final connection to the modified circuit shall be made so that the modified circuit will be in operation by nightfall of the same day the final connection is made.

Temporary electrical installations shall be kept in effective operation until no longer required. Removal of temporary installations shall conform to the provisions in Section 80.28 – Salvaging Electrical Equipment.

These provisions will not relieve the Contractor in any manner of his responsibilities as provided in Division 10, Section 10.06 - Legal Relations and Responsibilities.

Article 1.6 Scheduling of Work

Work shall be so scheduled that each new traffic signal system, lighting system, and sign illumination system shall be completed and ready for operation prior to opening to traffic of the corresponding section of new alignment.

Traffic signal systems shall not be placed in operation without energizing the street lighting at the intersection to be controlled if street lighting exists or is being installed with the traffic signals.

Contractor shall not place traffic signal systems into operation. Traffic Signal personnel are the only persons authorized to turn on a traffic signal.

Conductors shall not be pulled into conduit until pull boxes are set to grade, crushed rock sumps installed, grout placed around the conduit, and metallic conduit bonded.

In vehicular undercrossings, soffit lights shall be placed in operation as soon as practicable after falsework has been removed from the structure. Lighting for pedestrian structures shall be placed in operation prior to opening the structure to pedestrian traffic.

If the Engineer orders soffit lights or lighting for pedestrian structures placed in operation before permanent power service is available, the cost of installing and removing temporary power service will be paid for as extra Work as provided in Division 10, Sections 10.05 – Control of Work and 10.07 – Measurement and Payment.

Article 1.7 Safety Precautions

Before starting Work on existing series street lighting circuits, the Contractor shall obtain daily, a safety circuit clearance from the serving utility. By-pass switch plugs must be pulled and suitable signs posted at switch boxes before electrical Work begins.

Suitable signs shall be posted at Load Centers when a contractor is working on any of the circuits from that Load Center.

Article 1.8 Definitions

The Definitions in NEMA TS-2, Traffic Controller Assemblies with NTCIP Requirements Version 02.06, shall be used along with the following:

1. Electrolier: The complete assembly of pole, luminaire arm, luminaire, ballast, and lamp.
2. Luminaire: The assembly which houses the light source and controls the light emitted from the light source. Luminaires consist of the optical, electrical, and mechanical/thermal components of the assembly.
3. Lighting Standard: The pole and luminaire arm which must support the luminaire.
4. Vehicle: Any motor vehicle licensed for highway use by the State of Alaska.
5. Controller Unit: The solid-state device as described in Section 80.17, Article 17.2 – Controller Unit.
6. Controller Cabinet: A cabinet constructed, wired and equipped as described in Section 80.17, Article 17.5 - Controller Cabinet.
7. Controller Assembly. The controller cabinet, controller unit and the equipment described in Section 80.17. The controller assembly shall also be functioning in accordance with Section 80.17, Articles 17.1-General and 17.6 - Operation.
8. Anchor bolts apply to Luminaire poles and anchor rods apply to Signal poles. They are used interchangeably in this Division.

Article 1.9 Signs

Reference Division 70, Section 70.11 – Standard Signs.

Article 1.10 Measurement

All Work in this Section shall be measured by lump sum and shall consist of all labor, materials, and equipment necessary to provide temporary signalization and temporary illumination.

Article 1.11 Basis of Payment

Payment for this Work shall be in accordance with Division 10, Section 10.07 - Measurement and Payment, and shall include full payment for all Work described in this Section.

Payment shall be made under the following units:

ITEM	UNIT
Temporary Signalization	Lump Sum
Temporary Illumination	Lump Sum

SECTION 80.02 EXCAVATING AND BACKFILLING

Article 2.1 General

The excavations required for the installation of conductors, conduits, foundations and other appurtenances shall be performed in such a manner as to avoid any unnecessary damage to the streets, sidewalks, landscaping, and other improvements. The trenches shall not be excavated wider than necessary for the proper installation of the electrical appurtenances and foundations. Excavation shall not be performed until immediately before installation of conduit and other appurtenances. The material from the excavation shall be placed in a position that will not cause damage or obstruction to vehicular and pedestrian traffic nor interfere with surface drainage.

Trench, backfill, and disposal of surplus material shall be performed in accordance with Division 20 – Earthwork.

Excavations after backfilling shall be kept well-filled and maintained in a smooth and well-drained condition until permanent repairs are made.

All excavations shall be filled, and sidewalks, pavement, and landscaping restored at each intersection prior to excavating at any other intersection. Excavations in the street or highway shall be performed in such a manner that not more than one traffic lane is restricted in either direction at any time, unless otherwise provided in the Special Provisions.

Article 2.2 Construction

The Contractor shall excavate the trench to the proper depth as described herein and as shown on the Drawings.

The excavations shall be backfilled with material suitable to the Engineer. All backfill placed in the roadway area shall be Type II-A classified backfill as specified in Division 20,. Section 20.21, Article 21.2 - Material. All backfill material shall be placed in uniform layers of not more than six inches (6”) in depth and compacted to a density of not less than ninety-five percent (95%) of the maximum density as directed by the Engineer.

The Contractor shall be responsible for the restoration of all surfacing, turf, and native material to the original condition and appearance.

Article 2.3 Sawcut Trench

Where shown on the Drawings, or as directed by the Engineer, the Contractor shall construct a sawcut trench as detailed in the Drawings. A sawcut trench will be used to cross existing traveled lanes, existing curb and gutter, in median islands, along edges of paved roadways, and in sidewalk areas where a neat cut of the surfacing is required.

The Contractor shall cut the surfacing material full-depth and remove the surfacing material to expose the subgrade materials. The Contractor shall then excavate a trench, dispose of excess and waste materials, and install conduit as described herein.

In sawcuts of asphalt pavement located within the roadway pavement, Contractor shall remove a minimum distance of one foot (1’) back from the edge of the trench, on each side of the trench. Contractor shall remove pavement such that cuts parallel to the direction of travel are not located within the wheel paths.

The entire trench shall be backfilled as specified herein, except non-frost-susceptible sand bedding material shall be used.

The existing surface shall then be restored with like pavement in accordance with Section 40.07 - Remove and Replace Existing Asphalt Surfacing; Section 40.06 - Tack Coat; Section 30.03 - Portland Cement Concrete Sidewalks; or Section 30.02 Portland Cement Concrete Curb and Gutter, and Valley Gutter, as applicable.

Where applicable, asphalt tack coat shall be applied to all edges of the existing pavement prior to placing new asphalt. Asphalt pavement less than three inches (3”) in thickness shall be placed in one lift, and asphalt pavement three inches (3”) and greater in thickness shall be placed in a minimum of two equal lifts.

In median islands, the Contractor may elect to remove and replace the entire surface of the island along the length of the conduit run. If the Contractor elects to remove the entire surface of the island, the Work shall still be considered as sawcut trenching. The layer of pavement under the median islands, if encountered (normally at the street pavement grade), may be broken out.

The Contractor shall be responsible for the restoration of all surfacing, turf, and native material to original condition and appearance.

Article 2.4 Measurement

Measurement for trench and backfill and for sawcut trench shall be per linear foot of horizontal distance of the various widths and depths as set forth in the Bid Schedule. Measurement will be from station to station or from center of device to center of device as staked in the field and as shown on the Drawings.

Article 2.5 Basis of Payment

Payment for this Work shall be in accordance with Division 10, Section 10.07 - Measurement and Payment, and shall include full payment for all Work described in this Section.

Work not specifically identified for payment under a separate pay item, but required for normal completion of trench and backfill, will be considered incidental and shall be included in the linear foot cost of the trench. Sawcut trench includes removing existing pavement, trench and backfill, and replacing pavement.

Payment shall be made under the following units:

ITEM	UNIT
Trench and Backfill (Width) (Depth)	Linear Foot
Sawcut Trench (Width) (Depth)	Linear Foot

SECTION 80.03 REMOVING AND REPLACING IMPROVEMENTS

Article 3.1 General

Improvements such as sidewalks, curbs, gutters, Portland cement concrete and asphalt concrete pavement, base material, lawns and plants and other improvements removed, broken or damaged by the Contractor's operations, shall be replaced or reconstructed with the same kind of material as found on the Work or with materials of equal or better quality. The new Work shall be left in a satisfactory serviceable condition.

Whenever a part of a square or slab of existing sidewalk, curb and gutter, or driveway is broken or damaged, the entire square, section or slab shall be removed and the concrete reconstructed as above specified.

The outline of all areas to be removed in concrete sidewalks and driveways and in pavements shall be cut to a minimum depth of one and one-half inches (1 1/2") with an abrasive type saw prior to removing the sidewalk, driveways, and pavement material. The cut for the remainder of the required depth may be made by a method satisfactory to the Engineer. Cuts shall be neat and true with no shatter outside the removal area.

When a foundation is to be abandoned in place, the top of foundation, anchor bolts, and conduit shall be removed to a depth of not less than one foot (1’) below surface of sidewalk or unimproved ground. The resulting hole shall be backfilled with material equivalent to and compacted to the density of the surrounding material.

Article 3.2 Measurement

All Work under this section is incidental to other Work and will not be measured or paid for directly.

Article 3.3 Basis of Payment

No separate payment will be made for this item.

SECTION 80.04 FOUNDATIONS

Article 4.1 General

All foundations for poles, posts and pedestals shall be cast-in-place Portland Cement Concrete. Luminaire poles may be constructed on driven pile foundations.

Unless otherwise shown on the Drawings, all items to be relocated shall be provided with new foundations and anchor bolts of the proper type and size.

The Contractor shall be responsible for contour grading around all post, pole, and pedestal foundations. Final or finished grading shall be such that the earth shall be two inches (2”) below the top of the base and drain away from the base.

Foundations for poles shall be designed for one-hundred-mile-per-hour (100-mph) winds with gusts to one hundred thirty miles per hour (130 mph) in conformance with the requirements of the 1994 AASHTO design criteria for luminaire poles and ten foot (10’) signal pedestal poles and the 2001 AASHTO design criteria for signal poles.

Cabinet foundations shall be precast.

The entire controller foundation and the top twelve inches (12”) of pole or post foundations shall be formed and the top given a smooth steel trowel finish. Conduits shall be located in the center of the pole-post foundations with clearance allowed for bushings.

Except signal pole foundations constructed in accordance with Standard Details 80-10 and 80-11, the tops of all pole foundations shall be set so that the bottom center of the base plates are between four (4”) and six inches (6”) above finished grade at the pole's offset. The top of any foundation located on a slope shall be constructed such that the finished slope passes through the top center of the uphill edge of the foundation. The area two feet (2’) up and down slope of the edge of the foundation shall be graded so that no portion of the foundation projects above the surrounding slope and so that water will drain away from the foundation. For 42” signal pole foundations, the clearance between the top of the foundation to the bottom of the leveling nut shall not exceed 1”.

The Contractor shall field-verify pole foundation stationing and elevations prior to pouring the foundations, to insure that the final locations of the signal heads and mast arms meet the requirements of the Drawings and Specifications. The field-verification includes checking to insure that the heads will be the proper distance above the roadway surface, and mast arms will be of adequate length to place heads and signs in the right locations. Any discrepancies shall be reported to the Traffic Engineer prior to pouring the foundation.

Article 4.2 Cast-In-Place Concrete Foundations

The Contractor shall use a minimum 14 gauge corrugated steel pipe (CSP) form to cast concrete foundations in place. The Contractor shall over excavate the area around the form enough to allow for proper compaction. The backfill operation shall conform to the requirements of Division 20, Section 20.19 – Furnish Foundation Backfill. Contractor shall obtain approval from the Traffic Engineer prior to use of any material that is not specifically identified in Furnish Foundation Backfill. Substitution requests for alternate material, including any flowable fill, shall be designed to produce a comparable

compressive strength to the surrounding soil after hardening. The use of water for drilling operations or for any other purpose where it may enter the hole is not permitted.

Concrete shall be Class AA-3 Portland Cement conforming to Division 30 – Portland Cement Concrete.

Reinforcing steel and wire fabric shall conform to the requirements of Division 30, Section 30.01, Article 1.3 - Materials and Section 80.05 – Poles, Steel Pedestals and Posts. Reinforcement shall be placed and fastened in conformance with Division 30, Section 30.05, Article 5.2 - Construction, except that bars to be spliced shall be lapped at least fifty (50) bar diameters. Where bar spacing is less than one (1) foot in each direction, the Contractor may tie alternate intersections.

Drilled holes or forms shall be vertical, and true to the locations shown in the Drawings. Upon completion of excavation for a foundation, and prior to the placement of concrete, all loose material shall be removed in order that the foundation rests on firm, undisturbed ground.

Forms, if indicated or required, shall be true to line and grade, with the top of the foundation at the established elevation.

Conduit shall be included in all concrete foundations for wire and cable entry as shown on the Drawings as required to complete the Work. The conduit in pole or post foundations shall extend four inches (4") above the foundation (but not above the slip base adapter) and shall be sloped towards the hand-hole opening. These conduits shall exit the foundations in the top center of the foundation surface.

The reinforcing steel cage, if required, shall be placed and secured symmetrically about the vertical axis and shall be securely blocked to clear the sides of the foundation. Anchor bolt assemblies and conduit ends and reinforcing bar assemblies shall be securely supported by templates. Each anchor bolt shall have two (2) nuts and two (2) washers.

Anchor bolts, nuts and washers shall conform to ASTM F1554 and shall be hot-dip galvanized after fabrication in accordance with ASTM A153. Anchor bolts for signal mast arm foundations shall conform to ASTM F1554 and Section 80.05, Article 5.4 – Signal Pole Anchor Rods and Bolts. The grade of steel shall be as specified by the pole manufacturer, for the loading specified in Section 80.05, Article 5.1 - General. The exposed end of all anchor bolts used for signal mast arm poles shall be clearly stamped with the appropriate markings so that the type of bolts used in the foundation can be clearly determined after construction, per ASTM F1554 supplementary requirements S2, S3, and S5. Signal mast arm foundation anchor bolts shall conform to Charpy Impact Requirements at –20ºF, per supplementary requirement S5. Anchor bolts may not be field cut or bent. Damage to galvanized surfaces as a result of damage during shipping or construction activities shall be repaired in accordance with Section 80.16, Article 16.3 - Galvanizing.

Furnish each anchor bolt with three nuts and two washers. Install the bottoms of the bottom leveling nuts in a level plane within one inch (1”) of the top of foundations. Adjust nuts until their tops form a level plane. Install one washer on top of leveling nuts and, after setting the pole on these washers, install one washer under top nuts. Bring leveling nuts (bottom nuts) to full bearing on the bottom of the base plate. Generously lubricate

the bearing surface and internal threads of top nuts with beeswax. Tighten top nuts to a "snug" condition. Use a click type torque wrench to apply 600 foot-pounds of torque to the "snug" top nuts. After the top nuts are tightened to the correct torque, use a hydraulic wrench to rotate top nuts an additional one sixth (60 degree) turn, while preventing the leveling nuts from turning."

Material certifications for all anchor bolts shall be submitted to the Traffic Engineer or designated representative prior to acceptance of the foundations for payment.

Reinforcing bars shall be formed into cages and all intersections tied with #14 AWG steel wire. The cages shall be accurately held in position during placing and setting of the concrete. All reinforcing bars shall be bent cold in as smooth a curve as possible and shall conform to standard practice of the WCRSI. Reinforcing steel shall not be welded except as shown in the construction detail Drawings.

All reinforcing steel shall have a minimum of one inch (1") of concrete cover for controller cabinet and load center foundations. Cover for signal pole and luminaire foundations shall be as identified in the appropriate Standard Detail.

Surface water shall not be permitted to enter the hole and all water which may have infiltrated in the hole shall be removed before placing concrete. Both forms and ground shall be thoroughly moistened before placing concrete. Each foundation shall be poured in one continuous pour.

Posts, poles and pedestals shall not be erected or placed on the foundation until ten (10) days after placement of the concrete. If the Engineer approves Type III Portland High-Early-Strength Cement Concrete, then posts, poles and pedestals may be placed on foundations four (4) days after placement of the concrete. Plumbing shall be accomplished by adjusting the nuts on the anchor bolts. Shims or other similar devices for plumbing or raking are not permitted.

After each slip-base post, pole or pedestal is in position, grout conforming to Section 80.05, Article 5.3 – Grouting for Slip-Base Poles, shall be placed under the base plate as shown on the Drawings, and shaped to present a neat appearance. Contractor shall install metal skirting on all non-slip-base posts, poles, or pedestals.

Attach a #4 AWG, bare, copper wire as a grounding electrode conductor to the #4 spiral bar in the reinforcing steel cage. Use two irreversible compression connectors to make the attachment. Protect the attachment during concrete placement. In foundations that lack reinforcing steel cages, install 21 feet of coiled #4 AWG, bare, copper wire as the grounding electrode. Route the conductor to protrude near the top, center of the foundations. Slide a minimum six inch (6") long, PVC or HDPE, protective sleeve over the conductor. Allow one inch (1") of the sleeve and twenty-four inches (24") of conductor to protrude from the foundations.

Install anchor bolts and rods plumb. Anchor bolts and rods greater than 1:40 out of plumb will result in rejection of foundation. Contractor shall reconstruct rejected foundations at no additional expense to Owner.

MATERIAL REQUIREMENTS		
Concrete	Class AA-3	F'c = 4000 psi
CMP	AASHTO M218	14 ga
Vertical Reinforcing Steel	AASHTO M31 #11	GR 60
Spiral Reinforcing Steel	AASHTO M31 #5	GR 60
Ground Wire		#4 AWG
Anchor Rods 2"x96"	ASTM F1554 S2, S3, & S5	GR 105
Fasteners, Washers	AASHTO M293	
Fasteners, Nuts	AASHTO M292	
Finish, Anchor Rods & Fasteners	AASHTO M232	
Ring Plate	AASHTO M270	GR 36
Conduit	Sch 40	RMC
Protective Sleeve	Sch 40	PVC

Article 4.3 Load Center Foundation

Excavate sixty inches (60") for base and install eighteen inches (18") of coarse aggregate for drain. Backfill above gravel in six inch (6") lifts with non-frost-susceptible material, compacting to ninety-five percent (95%) in accordance with Division 20 – Earthwork.

Install base so that cast-iron cover is flush with pavement, sidewalk, or finished grade. Slope grade away from base with minimum slope of three percent (3%). Use a pre-molded bituminous joint between base and concrete sidewalk or paving.

Install a three-quarter inch by ten foot (3/4"x10') copper clad ground rod inside the base, readily accessible through the removable steel cover. Install an additional external three-quarter inch by ten foot (3/4"x10') copper clad ground rod eight feet (8') from the load center, and additional ground rods as required by Code or the electrical utility.

Connect cast-iron cover of load center base to the ground rod with six feet (6') of copper braid with eyelets every six inches (6") and approved connectors.

Access opening shall be finished with a twenty-four inch (24") square iron frame and cover, approximately 280 pounds total weight, as provided by Olympic Foundry, Part No. SM70 or approved equivalent.

Install four (4) each, three-quarter inch (3/4") ferrule loop inserts for lifting, two (2) on each long side.

Provide one inch (1") chamfer on all exposed concrete edges.

For two-piece units, seal joint with pre-molded plastic bituminous type joint sealer.

Article 4.4 Controller Cabinet Foundation

Contractor shall install controller cabinet foundation in conformance with Standard Details 80-5, 80-6, 80-7, and 80-8. The top surface of controller cabinet foundations shall be eighteen inches (18") above finished grade and provided with a one inch (1")

diameter drain hole connected to the cabinet interior and emptying above the ground line. All conduits shall be placed in the front half (door side) of the foundation to provide adequate wiring terminal block clearances.

Controller cabinet anchor bolts shall be as recommended by cabinet manufacturer and set with a template. Install a three-quarter inch by ten foot (3/4"x10') copper clad ground rod inside the base, readily accessible through the removable steel cover.

Controller cabinet foundations shall be installed in accordance with Section 80.04, Article 4.3, SubArticles 1, 2, 6, 7 and 8.

Article 4.5 Driven Pile Foundation

Driven pile foundations shall not be used for signal poles.

Contractor shall supply driven pile foundations of the size and length indicated. Contractor shall ensure that the top surface of the anchor plate is three inches (3") above finished grade at luminaire pole locations or as indicated in the Drawings.

After welding on the pile cap adapter and anchor plate to the driven steel pile, Contractor shall cold galvanize the pile cap, the pile cap adapter, anchor plate, and the top three feet (3') of the steel pile including pile cap and anchor plate. Contractor shall furnish galvanization that complies with Federal Specification DOD-P-210354A (Galvanizing Repair Spec) and is U.L. listed. Contractor shall prepare steel surfaces and apply the cold galvanizing compound in accordance with the manufacturers' recommendations. Five days prior to applying the cold galvanizing compound, Contractor shall provide the Engineer a copy of the manufacturers' instructions.

Article 4.6 Measurement

Foundations will be measured as units, complete and in place.

Article 4.7 Basis of Payment

Payment for this Work shall be in accordance with Division 10, Section 10.07 - Measurement and Payment, and shall include full payment for all Work described in this Section.

Payment will be made under the following units:

ITEM	UNIT
Cast-In-Place Luminaire Pole Foundations	Each
Driven Pile Luminaire Pole Foundations	Each
Controller Cabinet Foundation (Type)	Each
Signal Mast Arm Pole Foundation	Each
Signal Pedestal Pole Foundation	Each
Pedestrian Pushbutton Pole Foundation	Each
Load Center Foundation (Type)	Each

SECTION 80.05 MAST ARMS, POLES, STEEL PEDESTALS AND POSTS

Article 5.1 General

A registered professional engineer shall design the structures and provide stamped shop drawings and calculations. Submit the stamped drawings and calculations for each pole to the Traffic Engineer for approval. Design for the complete-in-place structure including the supported hardware.

In the stamped calculations, indicate the edition of Standard Specifications to which the poles are being designed and provide the input data used to design each pole and mast arm, including: design wind speed, cross section shape, yield strengths of the component materials, dimensions of the pole components, and a summary of the loads used.

On the stamped shop drawings, provide design wind speed and the details for building the luminaire poles, signal poles and mast arms, including: materials specifications, slip fit joint dimensions, pole component dimensions, welds that will be made, and the welding inspection that will be done.

Contractor shall submit the mill certifications for the steel items (piles, plates, bolts, and other related items) to the Traffic Engineer or designated representative for written approval. Written approval is necessary for acceptance of and payment for the items identified in this Section.

All steel and iron products which are incorporated into poles, including connection and anchor bolts, shall be manufactured in the United States. All manufacturing processes starting with initial mixing and melting through the final shaping, welding and coating processes must be undertaken in the United States. Manufacturing includes smelting, rolling, extruding, machining, bending, grinding, drilling, painting and galvanizing. This does not apply to raw materials such as iron ore, pig iron, and processed, pelletized and reduced iron ore.

Non-Destructive Testing (NDT) may be required by the Traffic Engineer on all newly manufactured poles for this project, prior to galvanization. A licensed technician shall perform all testing. NDT shall take the form or Magnetic Particle or Ultrasonic testing, and be performed as described in the current AASHTO standard. If required all NDT reports shall be submitted prior to acceptance for payment.

No exception to the practices mandated by AASHTO shall be allowed.

Poles shall not be relocated or re-used unless Contractor obtains written approval of the Traffic Engineer or designated representative.

The Contractor shall verify the shaft lengths and mast arm connector plate locations of all poles to insure the Drawing mounting heights of luminaires and traffic heads are met.

Damage to the galvanized or painted surface of existing poles to be relocated or reused in place and damage to the galvanized or painted surface that occurs during shipping or during the construction process, shall be repaired in accordance with Section 80.16, Article 16.3 – Galvanizing or Article 16.4 – Painting for Steel Structures, as appropriate prior to final acceptance of the poles and mast arms. Holes greater than five-eighths inches (5/8”) in diameter in the shafts of existing poles, due to removal of equipment, shall be repaired. Holes shall be repaired by tapping the hole, coating all exposed

edges with zinc rich paint, and plugging the hole with a screw-in type steel plug of the correct size. The plug shall be galvanized, or shall be completely covered with zinc rich paint. Holes less than five-eighths inch (5/8") diameter shall be ground smooth so there are no notches or cracks, and coated with zinc rich paint. Plugging holes and repainting damaged galvanized or painted surfaces shall be incidental to the Project and no additional payment shall be made.

Article 5.2 Poles and Arms

A. Calculations: Signal Poles and Arms Less Than 15' and Luminaire Poles and Arms

Street lighting poles, including luminare arms and head mounting brackets, shall be designed and fabricated to the 1994 AASHTO design criteria.

Minimum design wind velocity shall be the greater of one-hundred miles per hour (100 mph) or the AASHTO recommendation based upon a fifty (50) year mean recurrence interval dependent upon project location. A factor of 1.3 shall be used in design calculations to account for wind gusts. The design for luminaire poles shall include a traffic sign with an area of sixteen (16) square feet, located with its centroid nine feet (9') above the base of the pole.

Should project plan loading develop shear or moments greater than those related to the above loading, special design poles are required. Those "Special Design" poles will require calculation submitted to the Engineer for approval prior to use on the project.

Direct-embedded luminaire poles are no longer allowed.

B. Signal Poles and Arms Less Than 15' and all Luminaire Poles and Arms

Poles, prior to installation, shall be straight, with a permissive variation in sweep not to exceed one-quarter inch (1/4") per ten feet (10') of pole length.

A backing plate consisting of a metal sleeve shall be provided at all butt welded, transverse joints. The sleeve shall be No. 12 U.S. standard gauge steel minimum, and made from steel having the same chemical composition as the steel in the pole.

The metal sleeve shall have a minimum length of three inches (3"). The sleeve shall be centered at the joint and have the same taper as the pole outside the sleeve in full contact with the inside of the standard throughout the sleeve length and circumference. The weld metal at the transverse joint shall extend to the sleeve, making the sleeve an integral part of the joint. In round poles, standard steel pipe or tubing may be substituted for the tapered backing sleeve, at the discretion of the Engineer.

All welds shall be continuous. All welding practices shall conform to current AWS Code, AWS D1.1, latest edition.

All exposed welds, except fillet welds shall be ground flush with the base metal.

1. Poles

Poles less than fifteen feet (15') in length shall be round or multisided (greater than sixteen [16] sides), and constructed of No. 11 or heavier U.S. standard gauge steel or four inch (4") standard (Schedule 40) pipe or conduit, with the

top designed for a post-top slip-fitter. Standard pipe shall conform to the specifications of ASTM A53. The tops of tapered poles shall have a four and one-half inch (4 1/2") outer diameter. Pedestrian pushbutton posts shall be constructed of two and one-half inch (2 1/2") standard (Schedule 40) pipe and meet the requirements of ASTM A53. Multi-sided poles shall not be used without prior approval of the Traffic Engineer.

Luminaire poles fifteen feet (15') or longer shall be round or multisided and fabricated from sheet steel of weldable grade.

Poles may be fabricated of full length sheets or shorter sections. When two pieces are used, the longitudinal welded seams shall be directly opposite one another. When the sections are butt-welded together, the welded seams on adjacent sections shall be placed to form continuous straight seams from base to top of pole.

All exposed edges of the plates which make up the pole base assembly shall be finished smooth, and all exposed corners of such plates shall be neatly rounded to one and one-half inch (1 1/2") radius, unless otherwise shown on the Drawings. Anchor holes in the base plate shall be round. Slotted holes shall not be used. Slotted shafts shall be provided with slip fitter shaft caps of either galvanized steel or cast aluminum.

2. Arms

Arms less than fifteen feet (15') in length shall be round or multisided, and constructed of No. 11 or heavier U.S. standard gauge steel, or four inch (4") standard (Schedule 40) pipe or conduit. Standard pipe shall conform to the specifications of ASTM A53.

Luminaire arms fifteen feet (15') or longer shall be round or multisided and fabricated from sheet steel of weldable grade.

Arms may be fabricated of full-length sheets or shorter sections. Each section shall be fabricated from not more than two (2) pieces of sheet steel for lengths up to forty feet (40'). Where two (2) pieces are used, the longitudinal welded seams shall be directly opposite one another. When the sections are butt-welded together, the welded seams on adjacent sections shall be placed to form continuous straight seams from base end of arm.

Luminaire pole plate to pole shaft connection shall be of the "closed box" type with top and bottom plates of the box forming a continuous stiffening ring around the pole. Gusset assemblies for this connection shall be butt-welded together. Vent holes, necessary for galvanizing, shall be used.

All exposed edges of the plates which make up the base of the arm shall be finished smooth and all exposed corners of such plates shall be neatly rounded to one-eighth inch (1/8") radius, unless otherwise shown on the Drawings. Bolt holes in the mast arm base plate shall be round. Slotted holes shall not be allowed. Mast arm ends shall be provided with slip-fitter shaft caps of either galvanized steel or cast aluminum.

C. Traffic Signal Poles and Arms Between 15' and 65'

Traffic signal structures shall be designed and fabricated to the 2001 AASHTO design criteria with interim revisions and the Standard Details.

Fabricate signal and lighting structures from tapered steel tubes with a round or 16 sided cross section. Orient handholes located near the base of poles to face downstream of traffic flow.

Provide traffic signal poles, lighting poles, and signal mast arms in lengths evenly divisible by 5 feet.

Furnish poles and mast arms up to 40 feet long in one piece. Poles and mast arms longer than 40 feet may be furnished in one piece or in two segments with a slip type field splice. For slip type joints, provide a minimum overlap of two and one half (2.5) feet or the overlap specified in the Drawings, whichever is greater. In mast arms, locate these splices at least one foot away from the Drawing location of signal heads and signs. In signal poles, locate the edge of the female section at least 6 inches above the top of the signal mast arm connection.

Fabricate tubes with walls up to 1/2 inch thick from the prequalified base metals listed in AWS D1.1. Fabricate elements greater than 1/2 inch thick from steel that conforms to AASHTO M270 and meets the Fracture Critical Impact Test requirements for Zone 3. The Traffic Engineer will not accept structures that use laminated steel elements.

Fabricate the cross section of each tube from no more than 2 pieces of steel. When using 2 pieces, place the longitudinal welded seams directly opposite one another. Place the welded seams on adjacent sections to form continuous straight seams from the base to the top of the pole.

When tenons are needed to install traffic signals and luminaires, make them from two inch nominal schedule 40 pipe that conform to ASTM A 53 Grade B.

The Traffic Engineer does not allow holes made for lifting purposes in the ends of tubular segments, except in the free ends of luminaire mast arms. To add lift points, weld them to the tube opposite the longitudinal seam weld on the outside of female segments and on the inside of male segments. Before shipment, remove lift points added to the outside of the tubes, grind the area smooth with the base metal, and hot stick repair the finish in accordance with Section 80.16, Article 16.3 – Galvanizing or Article 16.4 – Painting for Steel Structures, as appropriate. Lift points added to the inside of tubes in place may be left in place.

The Traffic Engineer will reject poles and mast arms that are:

1. Not fabricated according to these specifications or the approved shop drawings,
2. Bowed with sweeps exceeding 3/4 inch throughout the length of the pole, mast arm, or segment, if furnishing a 2 piece pole or mast arm,
3. Out of round. Sections are out of round when the diameters of round members or the dimension across the flats of multisided members exceed two percent (2%) of the dimension specified on the shop drawings.

MATERIAL REQUIREMENTS			
	Between 15’ & 35’	Between 40’ & 50’	Between 55’ & 65’
ALL ASSEMBLIES			
Steel Through ½” Thick	ASTM A572 or A596		
Steel Over ½” Thick	AASHTO M270 F3 (50 ksi)		
Finish	AASHTO M111 & M232		
Mastarm Bolts	AASHTO M164		
Anchor Rods	Article 5.4 – Signal Pole Anchor Rods & Bolts		
POLE (LOWER SECTION)			
Design Length	21.5’		
Section Shape	Round		
Simplex Height	20’		
Fixed End Diameter	15.0” O.D.	17.0” O.D.	19.0” O.D.
Taper	0.14”/ft		
Tube Thickness	0.375”		
Base Plate	24”x24”x2.25”		
Bolt Circle	24”		
Signal Arm Plate	20”x20”x2.25”	22”x22”x2.25”	24”x24”x2.25”
Top Ring Thickness	0.375”		
Bottom Ring Thickness	0.375”		
Gusset Plate Thickness	0.375”		
Handhole Cover Thickness	10 ga		
Pole Skirt Thickness	10 ga		
MASTARM			
Design Length	35’	50’	65’
Section Shape	Round		
Taper	0.14”/ft		
Tube Thickness	See Std Dtl 80-XX	See Std Dtl 80-XX	See Std Dtl 80-XX
Mastarm Rise	3.0 Degrees		
Base Plate	20”x20”x2.25”	22”x22”x2.25”	24”x24”x2.25”
Bolt Circle	20”	22”	6 Vertical O.C.
Mastarm Bolts	1.5” x 4.5"		

D. Poles and Arms Greater than 65’

Refer to the project-specific Special Provisions and Drawings.

Article 5.3 Welding

Perform welding to conform to the 2001 Edition of AASHTO Standard Specifications for Structural Supports for Highway Signs, Luminaires, and Traffic Signals with interim revisions; current American Welding Society code; the latest edition of AWS D1.1 – Structural Welding Code - Steel; the Standard Drawings; and the following:

1. Make welds continuous. Grind exposed welds flush with the base metal at slip fit joints for the length of the slip fit joint plus one half the diameter of the female section.
2. On steels 5/16 of an inch thick and thicker, inspect 100 Percent of CJP welds by either radiography (RT) or ultrasound (UT).
3. Inspect a random 25 percent of PJP and fillet welds by magnetic particle (MT). If a defect is found, inspect 100% of the PJP and fillet welds made to fill the order. In steels less than 1/8 inch thick, complete the tests according to AWS D1.1.
4. Only visually inspect welds made on luminaire arms.

Article 5.4 Signal Pole Anchor Rods and Bolts

Furnish 2 inch diameter (nominal) anchor rods for signal poles that meet ASTM F1554 Grade 105, are 96 inch minimum length and conform to Supplemental Requirements; S2, Permanent Manufacturer's Identification, S3, Permanent Grade Identification and S-5 Charpy Impact Requirements. Hot dip galvanize according to AASHTO M232. Use nuts that conform to AASHTO Specification M292 of the grade, surface finish, and style for 2 inch diameter anchor rods. Washers shall conform to AASHTO M293.

Article 5.5 Finishing

Finish the edges of poles and mast arms to conform to the following requirements prior to galvanization in accordance with Section 80.16, Article 16.3 – Galvanizing. Neatly round the following features to the radius specified.

1. On holes through which electrical conductors pass, provide a 1/16 inch radius on both the entrance and exit edges,
2. On pole base plates, provide a 1/8 inch radius on edges along which plate thickness is measured and a smooth finish on all other exposed edges,
3. On the ends of tubes that form slip type joints, complete the following tasks on the two surfaces that contact one another. First, provide 1/16 inch radii on the inside and outside edges of the female and male segments, respectively. Then for the length of the joint plus one half the diameter of the female section grind down welds until they feature a radius concentric with the mating surface and remove material protruding from the two surfaces.

Provide caps to cover the free ends of poles and mast arms.

Article 5.6 Identification Tags

Identify critical information for poles and arms with visible permanent aluminum tags that contain the information shown in the Pole Markings Table. The measurements shown are for illustration purposes only. Use tags large enough to include required

information using 1/4 inch high text, 3/8 inch of space between successive lines of text, and at least 3/8 inch of space between the edges of the tag and the text. Secure the tags with two 1/8 inch blind rivets at the base of poles and the underside of mast arms. If furnishing a two piece signal mast arm with slip type joint, mark both pieces with the same message. Provide the holes for the blind rivets before galvanizing.

POLE MARKINGS TABLE

STRUCTURES		MEASUREMENTS	TAG MARKINGS
Signal Poles			
a)	Signal mast arm length	45 ft./55 ft.	SMA 45/*SMA 55*
b)	Luminaire mast arm length	22 ft./18 ft.	LMA 22/*LMA 18*
c)	Pole height	36 ft.	PH 36
d)	Intersection number (if more than one) - pole number		1 - P 4
e)	Sum of signal mast arm moments about centerline of signal pole		SM 4000/*SM 3200*
f)	Design wind speed	100 mph	DWS 100
Light Poles			
a)	Luminaire mast arm length	15 ft./15 ft.	LMA 15/*LMA 15*
b)	Pole height	37 ft.	PH 37
Signal Mast Arm			
a)	Mast arm length	40 ft.	SMA 40
b)	Intersection number (if more than one) - pole number		1 - P 4
c)	Sum of signal mast arm moments about centerline of signal pole		SM 3740
d)	Design wind speed	100 mph	DWS 100
Luminaire Mast Arm			
a)	Mast arm length	18 ft.	LMA 18
b)	Pole number (if unique arm design)		P 4

Note:
Italic type indicates additional Tag Markings if poles have 2 luminaire or 2 signal mast arms.

Article 5.7 Plumbing

Plumbing shall be accomplished by adjusting the nuts on the anchor bolts prior to grouting. A slight raking of the pole will be provided by plumbing the side away from the road. Shims or other similar devices for plumbing or raking will not be permitted.

Article 5.8 Grouting for Slip-Base Poles

The Contractor shall use a premixed grout having a minimum twenty-eight (28) day compressive strength of four thousand pounds per square inch (4000 psi). Proprietary grout mixtures shall be utilized in accordance with the recommendations of the manufacturer.

Concrete areas to be in contact with the grout shall be cleaned of all loose and foreign matter that would in any way prevent bond between the mortar and the concrete surfaces.

Contractor shall not grout unless ambient temperature will remain a minimum temperature of forty-five degrees Fahrenheit (45°F) for three days after grouting. All improperly cured or otherwise defective grout shall be removed and replaced at the Contractor's expense. No load shall be placed on the grout until it has set for at least ninety-six (96) hours.

For concrete bases, after each post, pole or pedestal is in position, grouting conforming to this Article shall be placed under the base plate as shown on the Drawings, and shaped to present a neat appearance.

Article 5.9 Galvanizing

All signal poles, mast arms, and pedestal poles shall be hot dipped galvanized in accordance with Section 80.16, Article 16.3 – Galvanizing.

Article 5.10 Measurement

Fixed-base luminaire poles shall be measured as units complete and in place, including all hardware, all wiring within the poles, and grouting of the base.

Slip base luminaire poles shall be measured as units complete and in place, including slip base adapter, all hardware, and all wiring within the pole.

Signal mast arm poles and signal pedestal poles shall be measured as complete and installed with all hardware, all wiring within the pole, and either grouting of the base or base plate skirt as appropriate.

Combination signal-luminaire poles shall be measured as complete and installed with all hardware, luminaire brackets, all wiring within the pole, and base plate skirt.

Pedestrian push button poles shall be measured as complete and installed with all hardware, all wiring within the pole, and grouting of the base.

All luminaires, luminaire arms, signal heads, pedestrian signal heads, pedestrian pushbutton assemblies, signal mast arms, signs and optical preemption detectors shall be installed and accepted when poles are measured for payment, but shall not be included in payment for poles. These items shall be considered separate pay items, and measured under the appropriate Sections of these Specifications. All other hardware; including wiring within the pole, repair of galvanization when damaged, and grouting of the base; shall be considered incidental to the pay items, and shall not be measured for payment.

Signal and luminaire arms will be measured as units complete and in place, including labor, equipment, and material necessary to make a complete and functioning unit.

All luminaires, signal heads, signs and optical preemption detectors shall be installed and accepted when mast and luminaire arms are measured for payment, but shall not be included in payment for mast or luminaire arms. These items shall be considered separate pay items, and measured under the appropriate sections of these Specifications. All other hardware, including wiring within the arms, shall be considered incidental to the pay items for signal mast arms or luminaire arms, and shall not be measured for payment.

Article 5.11 Basis of Payment

Payment for this Work shall be in accordance with Division 10, Section 10.07 - Measurement and Payment, and shall include full payment for all Work described in this Section.

Payment shall be made under the following units:

ITEM	UNIT
Slip Base Luminaire Pole (ft Length)	Each
Fixed Base Luminaire Pole (ft Length)	Each
Signal Mast Arm Pole	Each
Combination Signal/Luminaire Pole (MTG Height)	Each
Signal Pedestal Pole – Flange Base	Each
Signal Pedestal Pole – Slip Base	Each
Pedestrian Pushbutton Pole	Each
Signal Mast Arm (ft Length)	Each
Luminaire Arm (ft Length)	Each

SECTION 80.06 - THIS SECTION INTENTIONALLY LEFT BLANK

SECTION 80.07 CONDUIT

Article 7.1 General

Contractor shall run electrical conductors in conduit, except for overhead wiring, wiring inside poles and when otherwise called for in the Drawings. All conduit and fittings shall be galvanized, rigid type manufactured of mild steel or wrought iron conforming to U.L. Underwriters Laboratory Standard UL-6 and hot dip galvanized in accordance with American National Standards Institute specification ANSI C-80.1. If called for in the Drawings, rigid non-metallic type conduit shall conform to the applicable UL Standard UL-651 or UL-651A. Only one type of conduit shall be used in any one run from one junction box to another. Where non-metallic conduit is to be installed, the conduit runs between a load center and the nearest junction box shall be of the rigid metal type.

Conduit and fittings to be installed on the surfaces of poles or in structures and foundations shall be rigid metal type as specified above for underground installations.

Couplings for new rigid metal conduit shall be threaded. Where existing conduit is intercepted and extended, twist-on compression type couplings will be allowed. Set-screw couplings are not allowed on the project.

Conduit in foundations for ground rods shall be one inch (1”) diameter.

Contractor shall join conduits together with standard threaded couplings using a pipe wrench to ensure tight joints. Provide NPT threads on the ends of all shop and field cut conduits. Slip joints and straight threads shall not be used. Cut conduits with a rolling pipe cutter to ensure a square end and proper threading. Before threading, ream the cut ends to remove the sharp edge and all burrs. Thread the ends to within one thread of the factory threaded length and then paint the cut end and threads with a zinc rich paint overlapping the original galvanized finish. Galvanized coatings that have been cut or damaged shall be repaired in conformance with Section 80.16.3 - Galvanizing.

Until wiring is started, all conduit ends shall be capped with standard pipe caps or approved plug and coupling combinations. When caps are removed, the threaded ends shall be provided with approved conduit grounding bushings.

Contractor shall lay conduit to a minimum depth of thirty inches (30”) below finished grade. See Division 20, Section 20.13 - Trench Excavation and Backfill for backfill requirements.

Clean all debris and moisture out of conduits before installing conductors or cables.

If the conduit is for thaw wire only, then:

Fittings for use in below-grade storm drains shall be suitably rated as NEMA 7, complete with gaskets for watertight installations.

Provide suitable conduit seals and sealant to make connections to junction boxes installed with manholes watertight.

Junction boxes for installation in manholes shall be NEMA Type 7, with gasketed covers for watertight installations.

Couplings and all threaded connections shall be provided with Teflon tape or approved water treatment applied to threads before tightening.

Bottom of trenches for non-metallic conduit shall be relatively free of sharp irregularities which would cause pinching and excessive bending of the conduit. The first six inches (6”) of backfill shall be free of rocks exceeding the one inch (1”) maximum dimension.

Conduit entering the bottom of concrete junction boxes shall terminate with a ninety degree (90°) sweep inside the box wall. Conduit openings shall terminate not less than five inches (5”) above the bottom of all boxes and a minimum of six inches (6”) below the top of the Type I and Type IA boxes and twelve inches (12”) below the top of Type II and Type III boxes. Conduits entering through the junction box wall shall extend a minimum of two inches (2”) inside the box wall, and be a minimum of six inches (6”) above the bottom.

All foundations shall be furnished with conduits as shown in the Drawings. The conduits shall extend a maximum of four inches (4”) vertically above the foundation and slope towards the hand-hole opening.

Conduit runs shall avoid drainage collection points where possible. At low points in all conduit runs, a one-half inch (1/2”) drain hole shall be drilled in the bottom of the lower straight section of the sweep elbow and sump containing approximately two cubic feet of coarse concrete aggregate material shall be installed. Additional drains shall be placed adjacent to all junction boxes and structures, regardless of the method of conduit placement employed. Drilled holes in conduit shall be deburred inside and out to prevent scraping of conductors. The exterior of the one-half inch (1/2”) hole shall be wrapped with approved filter cloth material and secured as directed or approved by the Engineer.

Conduits for future use shall be provided with grounding bushings, bonded to ground, and capped with an approved plastic insert type or expandable rubber plug. A polypropylene pull rope with two hundred pound (200 lb) minimum tensile strength shall be installed in all conduits which are to receive future conductors. At least two feet (2’) of pull rope shall be doubled back into the conduits at each end.

Contractor shall mark all underground conduits with a continuous strip of 4-mil-thickness, six inch (6”) width polyethylene marker tape. Contractor shall mark the tape with a black legend on a red background and buried nine inches plus or minus three inches (9” ± 3”) below the finished grade. Contractor shall place two strips of marker tape side-by-side under all road crossings.

Where new junction boxes are placed in existing rigid metal conduit runs, the conduit shall be fitted with threaded bushings and bonded.

Conduit leading to soffit, wall or other lights or fixtures below the grade of the junction box shall be sealed by means of an approved sealing fitting and sealing compound.

Existing underground conduit without conductors to be incorporated into a new system shall be cleaned with a mandrel or cylindrical wire brush and blown out with compressed air.

The Contractor, at his expense, may use conduit of larger size than shown on the Drawings, and where used, it shall be for the entire length of the run from outlet to outlet. Reducing couplings are not permitted.

When extending existing conduits or installing junction boxes in existing conduit runs, extend the conduit into the proposed junction box or foundation using drains, elbows and bonding as required for new installations. When adjusting junction boxes, shorten or lengthen existing conduits to meet clearance requirements. Complete extensions and modifications to existing conduits using the same size and types of materials.

Contractor shall clean all debris and moisture out of conduits before installing conductors or cables.

All abandoned conduits shall be removed from junction boxes.

All knockouts for new conduit or removed conduit shall be grouted.

All knockouts for conduits entering through the side of junction boxes shall be grouted.

Cut off abandoned conduits flush with the inside wall or bottom of junction boxes. Contractor shall remove all conductors prior to abandoning conduit.

For thaw wire systems, one inch (1”) liquid tight flexible metal conduit (LFMC) shall be used in manholes and oil & grit separator facilities.

Article 7.2 Measurement

Measurement for furnishing and installing conduit is per linear foot of the size and type set forth in the Drawings and Bid Schedule. Measurement is the horizontal distance from center of device to center of device, or from station to station. Measurement shall include all fittings, couplings, pull wires, caps and elbows, and bonding and grounding conductors, which shall be considered incidental to conduit installation.

Conduits installed in manhole and catch basins will not be measured, but rather the following distances will be considered standard unless determined otherwise by the Engineer:

Manhole	forty feet (40’)
Catch Basin	sixteen feet (16’)

Article 7.3 Basis of Payment

Payment for this Work shall be in accordance with Division 10, Section 10.07 - Measurement and Payment, and shall include full payment for all Work described in this Section. Payment for trench, backfill, and wire are separate bid items.

Payment shall be made under the following units:

ITEM	UNIT
GRC Steel Conduit (Size)	Foot
Schedule 40 PVC Conduit	Foot
Schedule 40 HDPE Conduit (Size)	Foot

SECTION 80.08 JUNCTION BOXES

Article 8.1 General

The Work under this Section consists of performing all operations pertaining to removing and adjusting existing junction boxes to grade and for furnishing and installing a new junction box of the type specified. This Work shall include all excavation, bedding material, and bonding and grounding hardware.

Type I junction boxes shall not be used.

Junction boxes shall be installed at the approximate locations shown on the Drawings. The Contractor, at his expense, may install additional junction boxes to facilitate his Work. Junction boxes shall be located so they are not in the roadway, sidewalk, driveway, or pathway surfaces, unless otherwise noted in the Drawings. Where practical, junction boxes shown in the vicinity of curbs shall be placed a minimum of two feet (2') from the back of curb. Junction boxes shall not be located in areas where drainage collects or flows, including side slopes.

Article 8.2 Materials

Contractor shall provide precast reinforced concrete boxes (junction boxes) with cast iron lids, of the sizes and details shown on the Drawings.

Contractor shall provide precast reinforced concrete additions (junction box extensions) of the sizes and details shown on the Drawings with dimensions confirmed by field measurements.

Illumination junction boxes shall be pre-cast reinforced concrete with cast iron lids of the sizes and details shown on the Drawings.

All Portland concrete cement utilized in the adjustment of the Junction Box shall conform to the requirements as specified in Division 55, Section 55.05 - Manholes and Catch Basin Manholes. The joint sealing compound utilized to seal the joint between the electrical vault's lid and walls shall be Ram-Nek Flexible Plastic Gasket or an approved equal.

Article 8.3 Construction

All junction boxes with metal covers shall have the covers effectively grounded with a four foot (4') tinned copper braid for Type I and Type IA Junction Boxes or a six foot (6') tinned copper braid for Type II and Type III Junction Boxes. Use only stainless steel bolt assembly components to attach bonding braid to the cover (lid). Bond junction box lids to the grounding conductor using copper braid with a cross sectional area equal to an 8 AWG conductor and eyelets spaced at six inch (6") intervals.

The entire bottom of all junction boxes shall be bedded in coarse concrete aggregate material of a minimum depth of eighteen inches (18").

Top of junction boxes shall be one-quarter inch (1/4") below the sidewalk grade or top of adjacent curb. When located in an unpaved section adjacent to a paved shoulder the junction box shall be located one inch (1") below the finished grade and shall be installed one-quarter inch (1/4") below the surface in paved areas. Junction boxes located in areas requiring grading shall be adjusted as directed by the Engineer.

Junction boxes located in seeded areas shall be adjusted to two inches (2”) below the surface.

Junction boxes shall be located immediately adjacent to the pole or fixture they serve and at additional intervals to reduce the distance between junction boxes to:

1. 400 feet maximum for 25 pair interconnect cable.
2. 200 feet maximum for any other conduit runs.
3. If the limitations require additional junction boxes they shall be located on equal spacings subject to the above limitations.

Emboss the word LIGHTING on the lids of all junction boxes containing only lighting or thaw wire conductors, or only lighting and signal controller power conductors. Emboss the word TRAFFIC on the lid of all other junction boxes.

No later than forty-eight (48) hours prior to commencement of Work on adjustment of the Junction Box, Contractor shall contact the Traffic Department.

Prior to removal of the Junction Box associated with traffic detector loops, Contractor, Engineer, and a Traffic Department representative shall inspect and verify the condition of the Junction Box.

Prior to replacement of the Junction Box, Contractor, Engineer, and a Traffic Department representative shall inspect the vault lid and vault structure to verify adjustments. Any Work, personnel, and/or materials required to properly correct problems shall be at Contractor’s expense.

Article 8.4 Measurement

The method of measurement is the actual number of junction boxes removed, adjusted to grade and accepted, and the actual number of new junction boxes of the specified types furnished, installed, and accepted.

The unit cost for adjusting the Junction Box to finish grade shall include all labor, materials, and equipment. This shall include all required usable and unusable excavation, classified fill and backfill material, compaction, concrete cutting and removal, and required personnel. If the adjustment of the Junction Box necessitates pulling new cable to meet the specifications, all Work associated with pulling new cable, including the cost of the new cable and the work to pull the cable up into the pole/mast arm, is considered incidental to the bid item “Adjust Junction Box to Grade”.

Article 8.5 Basis of Payment

Payment for this Work shall be in accordance with Division 10, Section 10.07 - Measurement and Payment, and shall include full payment for all Work described in this Section.

Payment shall be made under the following units:

ITEM	UNIT
Junction Box (Type)	Each
Adjust Junction Box to Grade	Each
Remove Junction Box	Each
Junction Box Extension (Type)	Each

SECTION 80.09 EXPANSION FITTINGS

Article 9.1 General

Expansion fittings, as detailed on the structure Drawings, shall be installed where the conduit crosses an expansion joint in the structure. Each expansion fitting shall be provided with a bonding jumper of stranded, No. 6 AWG, copper wire.

Expansion-deflection fittings shall be waterproof and permit a three-quarter inch (3/4”) expansion and contraction and a three-quarter inch (3/4”) deflection without deformation.

Article 9.2 Measurement

Expansion fittings shall be considered as incidental to other Work.

Article 9.3 Basis of Payment

No separate payment for these items is allowed.

SECTION 80.10 CONDUCTORS

Article 10.1 General

Conductor sizes shall be based on the American Wire Gauge (AWG). Sizes shall conform to the Drawings or, when not shown, to the Conductor Termination Table below. Conductors shall be seven-conductor No. 14 AWG (7C-#14 AWG) for all vehicle heads, and five-conductor No. 14 AWG (5C-#14 AWG) for all pedestrian heads.

Conductor Termination Table

CONDUCTORS/ CABLE	CIRCUIT	WIRE COLOR	AWG NO.	BAND LEGEND
7	Vehicle Red Arrow	Red	14	Head Number
	Vehicle Yellow Arrow	Orange		
	Vehicle Green Arrow	Green		
	Common Neutral	White		
	Spare	White/Black		
	Spare	Black		
	Spare	Blue		
7	Vehicle Red Arrow	Red	14	Head Number(s)
	Vehicle Yellow Arrow	Orange		
	Vehicle Flashing Yellow Arrow	Black		
	Vehicle Green Arrow	Green		
	Common Neutral	White		
	Spare	White/Black		
	Spare	Blue		
7	Vehicle Red	Red	14	Head Number(s)
	Vehicle Yellow	Orange		
	Vehicle Green	Green		
	Common Neutral	White		
	Spare	White/Black		
	Vehicle Yellow Arrow	Black		
	Vehicle Green Arrow	Blue		
5	Pedestrian Don't Walk	Red	14	Head Number
	Pedestrian Walk	Green		
	Common Neutral	White		
	Spare	Orange		
	Spare	Black		
5	Photo Elec. Control	Black	14	PEC
	PEC Load to Contactor	Red		
	Neutral	White		
	Spare	Orange		
	Spare	Green		
3	Pedestrian Pushbutton	Black	14	Head Number
	Neutral	White		Located Under
	Spare	Red		
3	Flashing Beacon Ckt 1	Black	14	Head Number

Conductor Termination Table

CONDUCTORS/ CABLE	CIRCUIT	WIRE COLOR	AWG NO.	BAND LEGEND
	Flashing Beacon Ckt 2	Red		
	Neutral	White		
3	Preemption Confirmation Light	Black	14	“PRE” Conf Lt
	Neutral	White		
	Spare	Red		
3	Luminaire	Black	8	Circuit Number
	Luminaire	Red		Circuit Number
	Luminaire	White		
3	Service to Controller	Black	6	“SIG”
	Neutral	White		No Band
	Spare	Red		No Band
3	Sign Luminaire	Black	8	SIGN
	Sign Luminaire	Red		SIGN
	Sign Spare	White		

All insulated conductors shall consist of uncoated, stranded copper conforming to the specifications of ASTM B8, except for detector loop lead-in which shall consist of stranded, tinned copper.

Grounding conductors shall be bare copper of the gauge required by the Code and may be stranded, solid or braided.

Conductors used for the following purposes shall conform to the referenced specifications.

Article 10.2 Control Cables

Vehicular signal faces, pedestrian signal faces, pedestrian pushbutton detectors, flashing beacons, preemption devices, and photo electric controls shall be wired with signal cable conforming to IMSA 20-1.

The three-conductor No. 20 AWG (3C-#20 AWG) cable shown on the Drawings shall be used in an optically activated preemption system. The cable shall be sheathed in a black PVC jacket and include three (3) No. 20 AWG insulated conductors, and one (1) No. 20 AWG drain wire enclosed within an aluminized polyester shield. All conductors shall be stranded, individually tinned copper. The cable shall contain one yellow, one blue, and one orange insulated conductor. The cable shall be rated for 600 volts operation and be suitable for direct bury, installation in a conduit, and direct exposure to the atmosphere. Cable shall be a GTT Company’s No. 138 Opticom cable, or approved equal.

Article 10.3 Power Conductors and Cables

Power conductors and cable shall conform to ICEA Publication No. S-66-524, NEMA Publication No. WC7, and U.L. Standards. Conductors shall be insulated with chemically cross-linked polyethylene conforming to U.L. type XHHW or XHHW-2. Insulation shall be rated for 600 volt operation.

Three conductor cables shall have black, white, and red colored conductors.

All single-wire conductors and cables shall have clear, distinctive and permanent markings on the outer surface throughout the entire length giving the manufacturer's name or trademark, the insulation type-letter designation, the conductor size, voltage rating and the number of conductors if a cable.

Highway and sign illumination cable shall consist of insulated conductors with a low density, high molecular weight polyethylene jacket.

Power cables with conductors No. 6 AWG and larger shall be PVC or neoprene jacketed.

Load center control circuit wiring shall be No. 12 AWG XHHW.

Conductors in controller cabinets that carry the full signal load circuit shall be No. 10 AWG or larger.

All cabinets shall be wired with conductors sized to handle the amperage drawn under full cabinet use.

Illumination tap conductors that run from the fused disconnect kit in the pole base to the luminaire shall be No. 10 AWG.

Temporary overhead illumination conductors shall be Triplex #6 Aluminum with black cross-linked polyethylene insulation.

Article 10.4 Detector Loops and Lead-In Cables

Conductors for detector inductive loops shall be UL listed as Tube loop detector wire #14 AWG stranded single conductor in PVC tube (IMSA specification 51-5).

Loop Lead-in Cables. Use a tray cable that conforms to the following specifications to connect the loop detectors to the terminal blocks in the controller cabinet. Furnish this cable, also known as Snyder Cable, manufactured according to UL Standard 1277. Third-party certify these cables as Type TC and certified for use in underground conduit or as an aerial cable supported by a messenger, rated for 600 volts AC operation and sunlight resistance.

Use size 18 AWG, sixteen (16) strand, tinned copper conductors per ASTM B-33 insulated with wet rated cross-linked polyethylene. Twist the conductors into seven (7) pairs colored to match the following: Black & Red, Black & White, Black & Green, Black & Brown, Black & Yellow, Black & Orange and Black & Blue.

Provide each twisted pair with an overall aluminum foil coated Mylar shield that provides one hundred percent (100%) coverage and a 20 AWG tinned copper drain that is in constant contact with the foil side of the shield. Apply a tight fitting PVC jacket over the conductor assembly.

Article 10.5 Telemetry Cable

Interconnect cable shall consist of solid copper #19 AWG conductors of the number of pairs called for in the Drawings meeting the requirements of REA specification PE-39 for filled telephone cables. The shield may be either copper or aluminum.

Telemetry interconnect cable shall contain the number of pairs as shown on the Drawings. The conductors shall be covered with a .005-inch copper or aluminum shield that is electrically intact throughout the entire length of the new circuit. Grounding continuity of all copper shields shall be maintained at all termination points. T-Splices shall be made at the terminal block in the controller cabinet. Configuration and color coding shall be in accordance with the Interconnect Termination Table.

INTERCONNECT TERMINATION TABLE

Telemetry Cable: Type PE-39, #19 AWG, Solid Copper

Pair #	Tip	Ring	Pair #	Tip	Ring
1	White	Blue	14	Black	Brown
2	White	Orange	15	Black	Slate
3	White	Green	16	Yellow	Blue
4	White	Brown	17	Yellow	Orange
5	White	Slate	18	Yellow	Green
6	Red	Blue	19	Yellow	Brown
7	Red	Orange	20	Yellow	Slate
8	Red	Green	21	Violet	Blue
9	Red	Brown	22	Violet	Orange
10	Red	Slate	23	Violet	Green
11	Black	Blue	24	Violet	Brown
12	Black	Orange	25	Violet	Slate
13	Black	Green			

Article 10.6 Measurement

In this Article, the word “structure” means a pole, junction box, load center, or controller cabinet, and the word “cable” also refers to single conductors, when individual conductors are in the bid schedule. Each cable the Contractor installs shall be measured in horizontal feet from the center of a structure to the center of the adjacent structure, or from station to station. All terminations, markings, slack and other incidental supplies required to meet the provision of the Specifications are not measured, and are considered incidental to the Contract.

Wire and cable within poles, cabinets, and other devices are included under those bid units.

Article 10.7 Basis of Payment

Payment for this Work shall be in accordance with Division 10, Section 10.07 - Measurement and Payment, and shall include full payment for all Work described in this Section.

Payment will be made under the following units:

ITEM	UNIT
(No. of Conductors) (Size of Conductors) (Type of Cable)	Foot

SECTION 80.11 WIRING

Article 11.1 General

Conductors in fixtures and cabinets shall not be spliced and shall be cabled together with self clinching nylon ties. All conductors, including spares shall be attached to terminal blocks with "spade" type terminal lugs.

Conductors shall not be pulled into conduit until junction boxes are set to grade, crushed rock sumps installed, grout placed around the conduit, and rigid metal conduits are bonded to ground.

Conductors shall be pulled by hand or by commercially built cable pulling equipment that is specially designed for that purpose. The cable pulling device shall be equipped with a force limiting circuit and force gauge. The cable-pulling device shall be approved by the Engineer before it is allowed to be used. Powdered soapstone, talc, or other inert lubricant shall be used in placing the cables and conductors in conduit.

When new conductors are to be added to a conduit with existing conductors, all conductors shall be removed and the conduit cleaned with a mandrel or brush. Then both old and new conductors shall be pulled through as a unit. In a new installation, all conductors shall be pulled through the conduit as a unit.

Contractor shall leave at least three feet (3') of slack, but not more than four feet (4'), for each conductor at each lighting and combination pole, and in each junction box, splice location, and controller base. Where lighting conductors are contained in a conduit within the pole, the slack is not required.

Contractor shall install a nylon pull rope in all conduits where cable is replaced and/or removed.

The neutral for pedestrian push button circuits shall be separate from the signal light circuit neutral.

All control/signal conductors shall be run continuously without splices from a terminal block located in a cabinet, compartment, or signal head, to a similarly located terminal block.

Contractor shall splice illumination cable in pole bases and shall use approved fuse kits only. Contractor shall not use wire binding screws, studs or nuts.

With the prior approval of the Engineer, Contractor may use illumination cable splices in junction boxes. Contractor shall join the individual conductors by the use of non-insulated, overlap type pressure connectors insulated with mastic-lined shrink tubing. Contractor shall not use wire binding screws, studs or nuts. Contractor shall stagger splices to minimize overall diameter.

Illumination cable conductor splices shall be encapsulated in a rigid, two-piece, transparent, snap together, plastic mold specifically designed for each splice type. Molds shall have dimensions suitable for the splice, encase the cable outer protective jackets, be rated for 600 volts, and have fill and vent funnels for epoxy resin. Contractor shall fill the splice mold bodies, with epoxy resin, that are resistant to weather, aromatic and straight chain solvents, and does not sustain combustion.

Splices shall be insulated by: 1) a heat shrink tubing internally coated with an approved sealing compound or, 2) a cast of self-curing epoxy resin which is compatible with the wire insulation to form a weatherproof joint. Each insulated kit shall encompass only one cable and include the outer protective jacket(s).

Loop lead-in cable shall be run in a continuous manner without splices from the controller cabinet to the curbside detection junction box. Splicing of the loop conductors to the lead-in cable shall be in conformance with Section 80.18, Article 18.1 – Loop Detectors and Standard Detail 80-60.

Each loop lead-in cable pair shall then run without splices to the terminal block in the controller assembly, where all series or parallel connections shall be made. At a splice location, a short section of the cable jacket shall be removed and only the shielded pairs dedicated to the loops being spliced shall be cut.

All cables and single wire conductors shall be permanently identified using labels in all pole bases and cabinets, at each detector loop tail/lead in cable and illumination cable splices and in junction boxes.

Contractor shall furnish the two types of identification tags listed below that require a written legend, and write the legends specified neatly and legibly, using a black marking pen specified by the manufacturer. Contractor shall ensure that legends conform to Section 80.10, Conductor Termination Table, or as shown on the Drawings or detailed in the Special Provisions. Contractor shall replace, at no expense to the Owner, all identifications tags that the Engineer deems are illegible.

Use identification cable ties for labeling loop detector tails and for each set of paired loop lead-in conductors in the controller cabinet. Furnish identification cable ties made of nylon that have a nonmagnetic stainless steel locking device embedded in the head and a tag attached “flag style” to the head. The cable ties shall consist of a single strap with a minimum size tag of three-quarters inch by five-sixteenth inch (3/4” x 5/16”).

To label all other cables, use cable tags made of nylon reinforced vinyl that is impervious to the elements and will not tear. Provide tags with a four inch by one and three-quarters inch (4” x 1 3/4”) minimum size that are attached flag style at one corner to a single strap. Furnish yellow tags for labeling all signal and interconnect cables and red tags for labeling lighting and feeder cables.

Contractor shall remove abandoned conductors/cables.

The control and power cables shall be terminated as shown in 80.10, Conductor Termination Table. Three conductor power cables shall always have a spare. The white or red conductor shall be left as a spare, when the circuit is either 480 volt or a neutral is required, respectively.

Terminate all spare conductors on terminal blocks.

Article 11.2 Measurement

Work performed under this article is considered incidental to other Work.

Removal and disposal of abandoned conductors is not measured for payment and is incidental to other Work. All splices, pull wire-string, cable tags, connectors, and fused disconnects are also considered incidental and no payment shall be made.

The Traffic Signal Electronics personnel will test and perform tie-down for all traffic loop detectors. The Contractor shall prepare the lead-in cables for tie-down, including labeling, insulation stripping and fitting with termination connectors.

When an existing active signal system is being modified, the Traffic Signal Electronics personnel will terminate all control cables within the traffic signal controller cabinet. It shall be the Contractor's responsibility to prepare the cables for termination.

The Traffic Signal Electronics personnel will splice, test and perform tie-down on all interconnect wiring operations.

Article 11.3 Basis of Payment

No separate payment is allowed for this item.

SECTION 80.12 FUSED SPLICE CONNECTORS

Article 12.1 General

A fused, quick disconnect, splice connector shall be installed between the line and luminaire ballast tap conductors in the base of every pole equipped with a luminaire.

The connector shall be weather tight and consist of two halves: a single unit line side socket and load side plug. The plug and socket assembly shall be designed so that the fuse remains in the load side plug without exposing live metal parts when the connector separates. Coil springs shall not be a part of the current carrying circuit.

Contractor shall provide fuses that are ten (10) ampere, midget (13/32” x 1 1/2”) ferrule type with a fast acting current limiting (KTK type) design.

The Contractor shall install the fused connectors so they are readily accessible from the handhole. Tap conductors shall be installed so there is no slack when their ends touch the top of the foundation.

Article 12.2 Measurement

Work performed under this article is considered incidental to other Work.

Article 12.3 Basis of Payment

No separate payment is allowed for this item.

SECTION 80.13 BONDING AND GROUNDING

Article 13.1 General

Metallic cable sheaths, metal conduit, non-metallic conduit grounding wire, ballast and transformer cases, service equipment, sign switches, metal poles and pedestals shall be made mechanically and electrically secure to form a continuous system, and shall be grounded. Bonding and grounding jumpers shall be copper wire or copper braid of the same cross-sectional area as No. 8 AWG for all systems.

Bonding of slip-base type standards and pedestals shall be by means of two conductors from the conduit, one attached with a ground rod clamp to an anchor bolt and the other connected to the lower portion of the shaft. Bonding of standards with frangible coupling type bases shall be made by attaching one conductor from the conduit to the lower portion of the shaft. The attaching bolt shall be weather resistant and be a minimum of three-sixteenth inches (3/16”) in size. The conductor for the shaft shall be forty-eight inches (48”) long.

One side of the secondary circuit of step-down transformers shall be grounded.

Grounding of metal conduit, service equipment and neutral conductor at service point shall be accomplished as required by the Code and the serving utility, except that grounding electrode conductor shall be No. 6 AWG, or equal.

Unless otherwise sized on the Drawings, Contractor shall install a bare #8 AWG copper wire in all non-metallic and metallic type conduits for bonding purposes. When wire is pulled into or out of existing conduit and the conduit does not have an existing bare #8 AWG copper wire, Contractor shall install the ground wire.

Contractor shall splice grounding conductors with irreversible compression type connectors listed for the purpose.

Contractor shall install grounding bushings with insulated throats on the ends of all metallic conduits. All non-metallic conduits, except for detector loop home runs, shall have a bushing installed. Contractor shall allow for bushings when installing conduits in foundations.

Contractor shall replace all missing or damaged conduit grounding bushings, conduit bonding jumpers and junction box lid braided bonding jumpers.

Contractor shall provide a minimum #10 AWG green grounding insulated conductor in the pole shaft of all poles with luminaires, and shall terminate the conductor in the lighting fixture.

Bond junction box lids to the grounding conductor using copper braid with a cross sectional area equal to an 8 AWG conductor and eyelets spaced at six inch (6”) intervals.

An integral bare ground shall not be used in any cable.

Contractor shall ensure that the grounding conductor, between all ground rods, is continuous or spliced with irreversible ground rated splices.

Contractor shall install a three-quarter inch by ten foot (3/4” x 10’) copper clad steel ground rod in the foundation space of a two-piece vault style traffic signal controller

foundation. If two-piece vault style controller foundation isn't being installed, then install ground rod within Type 3 junction box adjacent to controller cabinet base.

Contractor shall use only stainless steel bolt assembly components to attach bonding braid to the cover (lid).

Furnishing and installing bonding and grounding conductors for electrical installations is incidental to this Contract and no additional payment is made.

Article 13.2 Measurement

Work performed under this article is considered incidental to other Work.

Article 13.3 Basis of Payment

No separate payment is allowed for this item.

SECTION 80.14 LOAD CENTERS

Article 14.1 General

When the positioning of the load center is not detailed on the Drawings, the location shown is approximate and the Contractor shall determine the exact location from the Engineer or the serving utility.

If a junction box is not shown on the Drawings adjacent to or within five feet (5') of any new or reconstructed load center, contact the Engineer immediately for clarification. A j-box of the appropriate size and type for the new system is required to be installed with the load center.

Where Contractor is required to install the service on a utility-owned pole, the positioning of the riser and service equipment is determined by the serving utility.

The serving utility shall approve load center meters, complete with manual circuit closing device and sealing rings. Contractor shall not mount meter sockets on doors.

All accessible sections containing non-metered conductors shall have sealing provisions that will accept Brooks Type 623 seal (0.047 stainless bail).

Contractor shall ensure that the load center is located ten to fifteen feet (10' to 15') from the power source, with a two inch (2") minimum conduit stubbed to within two feet (2') of the power source, and at a minimum depth of forty-two inches (42"). The conduit shall contain a pull-rope, and the end capped and marked with a two by six inch (2" x 6") board. Contractor shall coordinate exact location with the serving utility.

Contractor shall stub service conduit through base as shown on the Drawings.

Prior to the load center being energized by the serving utility, Contractor shall arrange to have it inspected and approved by the Engineer. Once the Engineer has provided approval, a Municipal Electrical Inspector will provide the final authorization for energizing the load center. The certificate of electrical inspection, attached to the load center, indicates that the load center may be energized.

At all new and existing load centers, which require modification, the Contractor shall furnish conduit, conductors, contactors, breakers, transformers, and all necessary materials to complete the installation of the service, and upgrade to current code requirements.

Contractor shall label the load center as a unit by an Approved Independent Electrical Testing Laboratory (such as UL, ETL, CSA, etc.) defined by ANSI Standard Publication Z34.1 "Third Party Certification Programs for Products, Processes and Services" and conform to applicable published standards noted herein, the Drawings, and Special Provisions. Contractor shall label the load center as service entrance equipment. All Work shall conform to the latest edition of the National Electric Code as last amended and adopted by the Municipality of Anchorage.

All lighting load centers shall contain a multi-pole, 3-position control switch to provide selection of photocell operation. Contractor shall label switch positions "Auto," "Off" and "On." In the "Off" and "On" positions of the switch, Contractor shall ensure all leads to the photo control device are de-energized. Contractor shall install the switch inside the load center, accessible only through one of the lockable doors.

Contractor shall provide UL-approved and listed circuit breakers. Contractor shall provide an enclosed operating mechanism that is:

1. trip-free from operating handle on overload
2. trip-indicating
3. plainly marked with trip and frame size.

Multiple-pole circuit breakers shall have a common trip. Contractor shall ensure that all circuit breakers are quick-make, quick-break on either automatic or manual operation, and shall meet the requirements of the serving utility. Contractor shall ensure that the contacts are silver alloy enclosed in an arc-quenching chamber. An ambient temperature range of from -40° to +160° Fahrenheit shall not influence overload tripping of breakers.

The contactors shall have contacts rated to switch thirty (30) or sixty (60) AMP inductive loads as the Drawings specify, and are normally open. Contractor shall provide mechanical armature type contactors consisting of an operating coil, a laminated core, a laminated armature, contacts, and terminals with contacts made of fine silver, silver alloy, or superior alternative materials and rated for 480V.

Contractor shall provide the lighting contactor coil(s) rated for operation at 240 VAC.

Contractor shall connect ground bus of load center to ground rod(s) with #6 soft drawn bare copper and approved connectors.

Dimensions given are typical. Slight variations are allowable, subject to Engineer's approval.

Contractor shall submit four (4) copies of manufacturer's shop drawings for Engineer approval.

Contractor shall indicate the interrupting rating on panel schedules for each location.

On panel schedules for each location, Contractor shall indicate service rating of 120/240V, 3 wire; 240/480V, 3 wire; 100 AMP or 200 AMP.

Contractor shall provide a typed circuit directory for each load panel inside of the load center door, protected with a laminated plastic cover, describing each circuit, with even and odd numbered circuit breaker positions shown on separate parts of the directory. Contractor shall provide a power and control 1-line diagram protected by a laminated plastic cover inside the load center. Contractor shall include the following information on the directory and one-line diagram: Load Center Identification (A, B, etc.), Project Name, Municipal Project Number and Service Voltage.

Contractor shall ensure that the wiring configuration conforms to the appropriate electrical diagram, and as the panel schedule indicates for each intersection. Contractor shall complete a load center summary per appropriate detail drawing for each load center location.

Contractor shall ensure that all terminals are suitable for AL/CU termination, sized in accordance with ampere ratings.

Contractor shall provide #12 AWG XHHW as the load center control wiring.

Contractor shall ensure that the utility section is isolated from main load section and the distribution load sections by non-removable metal barriers, and equipped with landing lugs for utility termination.

The meter section shall contain a meter safety socket with safety shield and provisions for manual bypass of the meter. Contractor shall provide a link or lever type bypass with no external screws, bolts, or nuts. Horn and sliding types are not acceptable.

External screws, bolts, and nuts are not acceptable.

Contractor shall provide exterior ScotchCAL 220 labels with ownership and purpose, safety labels, interior identification labels, wiring diagram, and installation instructions with the load center enclosures.

Contractor shall label in a prominent manner all switches and circuit breakers for circuit and direction.

Contractor shall ensure the lighting contactor coil is rated for operation at 240 VAC.

Contractor shall install load centers having 30 milliamp (ma) ground fault circuit breakers with ratings for all heat trace circuits as indicated on the Drawings.

Contractor shall label each load center with durable, weather resistant identification tags inscribed with: Maximum Fault Current _____A, Calculated ___/___/___.

Load Centers shall be equipped with a hasp for padlocks.

Article 14.2 Illumination Control

Contractor shall install photoelectric controls capable of switching multiple lighting systems directly.

The photoelectric control shall consist of a photoelectric unit that shall cause a contactor to be energized, thus controlling the lighting circuit. Contractor shall install photoelectric units on the load center, unless the Engineer requires pole mounting of the photoelectric unit because a load center mounted unit will not work properly due to ambient light sources. If required, Contractor shall provide photoelectric units for pole top mounting with a slip fitter, terminal block and with cable supports or clamps to support pole wires. Load center mounted photoelectric units shall be installed using ¾" GRC and mounted a minimum of 18" above the load center. There will be no separate payment for providing the required photoelectric units.

Photoelectric Unit:

1. The photoelectric unit shall consist of a light sensitive element connected directly to a normally closed, single pole throw control relay without intermediate amplifications.
2. The unit is either the horizontal sensing or zenith sensing type and shall conform to the following:
    a. The supply voltage rated is 60 hertz (Hz), 105-277 volts.
    b. The maximum rated load is a minimum of 1,800 volt-amperes.
    c. The operating temperature range is from -40°F. to +150°F.
    d. The power consumption is less than 10 watts.

e. The base of the unit has a 3-prong, EEI-NEMA standard, twist-lock plug mounting.

3. Units for highway lighting shall have a "turn-on" between one (1) and five (5) foot candles and a "turn-off" at between one and one-half and five (1½ and 5) times "turn-on."

4. Contractor shall ensure measurements conform to the procedures set forth in EEI-NEMA Standards for Physical and Electrical Interchangeability of Light-Sensitive Control Devices Used in the Control of Roadway Lighting.

5. The photoelectric control unit shall plug into a phenolic resin twist lock receptacle, adjusted to north sky set in a cast aluminum-mounting bracket with a threaded base. When installed on the load center, Contractor shall ensure the bracket is coupled to the end of a rigid metal conduit. When installed on the top of steel poles, Contractor shall ensure the bracket is installed in the center of the rain cap, secured with a locknut and made watertight with a fillet of silicone caulking compound. When installed inside the load center, Contractor shall ensure the installation conforms to the manufacturer's recommendations and that all load center penetrations/openings are silicon sealed.

6. Contractor shall screen photoelectric units to prevent artificial light from causing cycling.

The load center shall contain a 2-pole, 3-position on/off/auto switch. In the "on" and "off" positions, Contractor shall ensure the switch interrupts all hot leads to the photocell.

Article 14.3 Step Up/Step Down Transformer

Step up/step down transformers in 480 volt circuits shall be 240-120 volt, 60 Hz type with volt-ampere ratings as shown on the Drawings. Transformers shall carry rated volt-amperes continuously without exceeding 85°C temperature rise above 25°C ambient.

Where installed outside of the load center, use a non-ventilated transformer fabricated of aluminum, stainless steel or galvanized steel. Coat enclosures fabricated of sheet metal with moisture resistant paint.

The case shall be fabricated of aluminum, brass, or galvanized steel. The case shall be coated with moisture resistant paint.

The unit shall be filled with a high melting point insulating compound and shall be hermetically sealed to insure satisfactory operation under continuous submersion in water.

Transformer leads shall be insulated with non-hygroscopic material and shall extend at least nine inches (9") outside the case seal.

The primary and secondary sides of the transformer shall be "protected" in the load center.

Article 14.4 Load Center Enclosure

All doors shall be equipped with continuous stainless steel pin hinges, coin latches, and hasp for padlock.

Meter section door shall have a clear lexan meter reading window, 0.187" minimum thickness, with a minimum size of eight by eight inches (8.0" x 8.0"), and shall include a silicon seal to door.

The load center shall be provided with internal mounting facilities for a one-half inch (1/2") anchor bolt installation as well as for use with a standard factory mounting base assembly.

Construction shall be of zinc-coated A60 finish steel with minimum thickness as follows:

Exterior Shell - 12 GA.

Interior Doors - 14 GA.

Interior Panels - 14 GA.

Interior Covers - 16 GA.

The load center shall be painted with a two-part urethane paint undercoating inside and out. The final finish shall be a two-part urethane paint, standard white for removable panels and non-gloss silver-gray, Benjamin Moore GN-42, for the enclosure.

The required location for the hand-off-auto switch and the contactor is in the distribution load section.

All non-current carrying parts shall be bonded to ground.

Article 14.5 Post-Mounted Load Center, Type 2 - Underground Service

A post-mounted load center, Type 2, shall be defined in the Construction Drawings by reference to appropriate Standard Details for the load center, wiring diagram, and panel schedule.

Article 14.6 Post-Mounted Load Center, Type 3 - Overhead Service

A post-mounted load center with overhead service, Type 3, shall be defined in the Construction Drawings by reference to appropriate Standard Details for the load center, wiring diagram, and panel schedule.

Article 14.7 Single-Meter Pad-Mount Load Center, Type 1 & 1A

A single-meter pad-mount load center, Type 1A, shall be similar to Circle AW CMP-4111MN mounted on MB-1514 base or equivalent approved by the Municipal Traffic Engineer. It shall be defined in the Construction Drawings by reference to appropriate Standard Details for the load center, wiring diagram, and panel schedule.

A single-meter pad-mount load center, Type 1, shall be similar to Circle AW CMP-4900 series mounted on MB-2820 base or equivalent approved by the Municipal Traffic Engineer. It shall be defined in the Construction Drawings by reference to appropriate Standard Details for the load center, wiring diagram, and panel schedule.

Article 14.8 Measurement

Load centers shall be measured as units, complete and in place. Bases for load center enclosures shall be a separate bid item under "foundations."

Photoelectric units mounted on the load center shall not be measured separately for payment. The Work performed under Article 14.2 – Illumination Control, is considered incidental to Work performed under Articles 14.5 through 14.7, unless a pole mounted photoelectric unit is required.

Article 14.9 Basis of Payment

Payment for this Work shall be in accordance with Division 10, Section 10.07 - Measurement and Payment, and shall include full payment for all Work described in this Section.

Separate payment will be allowed for pad-mount bases.

Payment shall be made under the following units:

ITEM	UNIT
Post-Mounted Load Center Overhead Service, Type 3	Each
Post-Mounted Load Center Underground Service, Type 2	Each
Single-Meter Load Center Enclosure, Type 1	Each
Single-Meter Load Center Enclosure, Type 1A	Each
Pole-Mounted Photocell Installation, Complete	Each
120/240 - 240/480, Transformer	Each

SECTION 80.15 WOOD POLES

Article 15.1 General

Wood poles for service or temporary installations shall be of the class shown on the Drawings. Wood poles used in temporary installations shall meet or exceed ANSI class 4 for poles used for temporary illumination only, and ANSI class 1 for poles used for temporary signalization.

Poles shall not have more than 180 degrees twist in grain over the full length. Sweep shall be no more than four inches (4”). Poles shall be placed in the ground to a depth of at least six feet (6’). The lengths of poles shall be twenty-five feet (25’) for service poles and thirty-five (35’) feet for other poles, unless otherwise specified.

After each wood pole is set in the ground, the space around the pole shall be backfilled with selected earth or sand, free of rocks four inches (4”) or larger, or deleterious material, placed in layers approximately four inches (4”) thick and thoroughly compacted with mechanical tampers.

Mast arms and tie rods for wood pole installations shall conform to the provisions of Section 80.05 – Poles, Steel Pedestals, and Posts, and to the details shown on the Drawings. Each mast arm shall be provided with an insulated wire inlet and wood pole mounting bracket for mast arm and tie rod cross arm.

Overhead equipment shall provide a minimum vertical clearance of eighteen feet (18’) from bottom of equipment to the pavement.

Wood poles, not to be painted, shall be pressure treated after fabrication with creosote, pentachlorophenol (oil borne), or copper naphthenate (oil borne) in accordance with the latest applicable standards of the American Wood Preservers Association. Where it is impractical to obtain the specified retentions because of the character of the wood in the charge, the treatment shall be to refusal. The retentions may be determined either by gauge or scale readings or by assay. Treated poles shall be coated in conformance with current EPA regulations.

Wood poles shall not be used for permanent installations.

Article 15.2 Measurement

Wood poles used for temporary support of signals, signs and illumination shall be measured as temporary wood pole structures installed and removed.

Article 15.3 Basis of Payment

Payment for this Work shall be in accordance with Division 10, Section 10.07 - Measurement and Payment, and shall include full payment for all Work described in this Section.

Payment shall be made under the following units:

ITEM	UNIT
Temporary Wood Pole Structures	Each

SECTION 80.16 MISCELLANEOUS

Article 16.1 Sign Switches

Each sign illumination installation shall be provided with a disconnect switch mounted on the sign standard or structure, as shown on the Drawings. Where the sign lighting is served from a multiple service, each sign structure shall have a 120-volt, 240-volt, or 480-volt circuit breaker, approved by UL as service equipment, and rated as shown on the Drawings.

Enclosures for the sign breaker shall be galvanized or baked enamel NEMA Type 3R, and shall be provided with top hinged cover, hasp for sealing cover and provisions for locking.

Article 16.2 Field Tests

Prior to acceptance of the Work, the Contractor shall perform the following tests on all traffic signal, sign illumination, and lighting circuits, in the presence of the Engineer.

A. Tests

Any fault in any material or in any part of the installation revealed by these tests shall be replaced or repaired by the Contractor at his expense in an approved manner, and the same test shall be repeated until no fault appears.

1. Continuity

   Each circuit shall be tested for continuity.

2. Grounds

   The test for grounds in each circuit shall consist of the physical examination of the installation to insure that all required grounding bushings, bonding jumpers, and ground rods have been installed and are mechanically firm.

3. Insulation

   A megohm test shall be made on each circuit, between circuits and between the circuit and a ground. The insulation resistance shall not be less than 100 megohms or the minimum specified by the manufacturer, measured at 500 volts direct current (VDC). All lamps and magnetometer sensing probes shall be disconnected prior to performing the megger test.

4. Circuit

   Every signal indication circuit shall be energized with lamps installed prior to installation of the load switches.

5. Functional

   The following tests shall be performed on each signal and lighting system after all of the component circuits have satisfactorily passed the tests for continuity, grounding, insulation integrity and circuitry.

B. Functional Testing

During the test periods, the Contractor will maintain the system or systems. The cost of any maintenance necessary shall be at the Contractor's expense.

1. The functional test for each new or modified traffic signal system shall consist of not less than twenty-four (24) hours nor more than five (5) days of continuous flashing operation.
2. During the functional tests, signals shall not be switched from flashing operation to normal, continuous operation on a Saturday, Sunday, Monday, a Holiday, or the day after a Holiday.
3. The functional test for each lighting system and sign illumination system shall consist of an operational test for five (5) consecutive nights according to the regular lighting schedule.
4. The functional test for each flashing beacon system shall consist of not less than five (5) days of continuous, satisfactory operation.
5. A continuous five (5) day burning test shall be made on each pedestrian overcrossing and undercrossing lighting system before final acceptance.

The initial turn-on shall be made between 9:00 a.m. and 2:00 p.m. unless specified otherwise in the Special Provisions. Prior to turn-on, all equipment shown on the Drawings shall be installed and operable. This includes, but is not limited to, pedestrian signals and push buttons, signal face backplates and visors, vehicle detectors, highway lighting and all regulatory, warning and guide signs. All signal faces shall be aimed as required by Sections 80.19 – Signal Heads and 80.20 – Pedestrian Signals.

Article 16.3 Galvanizing

A. General

Standards, pedestals, posts and cabinets of ferrous materials shall be galvanized in accordance with the provisions of ASTM A123 except that cabinets and cut out boxes may be constructed of material galvanized prior to fabrication.

Iron or steel pipe standards and mast arms shall be hot-dip galvanized after fabrication in conformance with the ASTM A123.

Tie-rods, nuts, washers, clamps, anchor bolts and other miscellaneous ferrous parts shall be hot-dip galvanized after fabrication in accordance with the provisions of ASTM A153. Anchor bolts shall be fully galvanized.

After galvanizing, the bolt threads shall accept galvanized standard nuts without requiring tools or causing removal of protective coatings.

Rigid metal conduit shall be hot dip galvanized in accordance with American National Standards Institute specification ANSI C-80.1.

Galvanized coatings that have been cut or damaged shall be repaired in conformance with ASTM A780.

Lighting and signal structures shall be hot-dip galvanized to meet AASHTO M 111 and these specifications. Galvanizing kettles will be large enough to completely submerge each element, the mast arm, and the pole. Submerge the complete/whole element in the galvanizing process. An element galvanized in sections will not be accepted. After the poles and mast arms are galvanized,

remove all excess zinc from all drip lines and points and the surfaces of all tube ends that form slip type joints to provide a smooth finish.

B. Cold Galvanizing

Repair hot-dip galvanized finishes that have been cut or damaged and cold galvanize the tops of pipe pile foundations with a premixed, single component, zinc rich paint that:

1. Meets the requirements of Federal Specification DOD-P-21035A, Galvanizing Repair Specification and ASTM A 780, Repair of Damaged and Uncoated Areas of Hot-Dip Galvanized Coatings,
2. Contains ninety-five percent (95%) zinc, by weight, in the dried film, and
3. Is recognized under Underwriters Laboratories, Inc. component program as an equivalent to commercial hot-dip galvanizing.

Apply the paint directly to surfaces devoid of grease, oil, mill scale, rust, and paint. Clean soiled surfaces according to the following Steel Structures Painting Council (SSPC) specifications before applying the paint:

Solvent clean greases and oils according to SSPC-SP1

Power tool clean rust and easy to remove paint according to SSPC-SP3

Sandblast mill scale and firmly adhered paint according to SSPC-SP6 (commercial).

Apply the paint whenever the temperature of the pipe pile is at least five degrees Fahrenheit (5ºF) above the dew point to avoid possible condensation and the relative humidity is less than eighty-five percent (85%). Apply two (2) coats of three (3) mil wet film thickness, applying the second coat at least twelve (12) hours after applying the first coat. (Each gallon will cover about four hundred and fifty (450) square feet of three (3) mil wet film thickness.)

Article 16.4 Painting for Steel Structures

A. General Requirements. Ship paint in strong, substantial containers, plainly marked with the name, weight, and volume of the paint content, together with the color formula, batch number, and the name and address of the manufacturer.

Reduction and clean-up thinners will be as approved by the coating manufacturer. Ship all thinners in the manufacturer's original containers.

B. The paint shall conform to the requirements outlined below:

1. Prime Coat. A generic single component, moisture cure, polyurethane (SC-MC-U) containing not less than 78% by weight zinc powder. Volume of solids shall be 60% minimum. Pigment type shall be zinc dust. Zinc in dry film shall be 83% minimum, by weight. Weight per liter shall be 2750 g, minimum. Volatile organic compounds (VOC's) shall not exceed 450 g/L.
2. Intermediate Coat. A SC-MC-U containing not less than 480 g/L micaceous iron oxide (MIO). Volume of solids shall be 60% minimum. Pigment color shall contrast between the intermediate and prime coat and the intermediate and top coat. Weight per liter shall be 1550 g minimum. VOC's shall not

exceed 450 g/L.3. Top Coat. A single component, moisture cure, aliphatic polyurethane (SC-MC-ALIP-U), containing not less than 480 g/l micaceous iron oxide (MIO). Volume of solids shall be 60% minimum. Pigment color of the top coat shall be FSS FED-STD-595B, color number 26492. The color match shall be evaluated as a general match under a daylight source using ASTM D 1729. Weight per liter shall be 1550 g minimum. VOC's shall be less than 450 g/L.

3. All coatings shall pass the following tests:

   a. Corrosion Resistance, ASTM B 117, Salt Spray Test. Minimum of 4000 hours with less than 2 mm creep from scribe. Panels shall be 3 mm minimum thickness cold rolled steel, having SSPC Near White Blast with 25 to 50 μm angular profile.

   b. Accelerated Weathering, ASTM G 53. Minimum 400 hours QUV B bulb with no chalking, cracking, or gloss loss greater than 20%.

   c. Forward Impact, ASTM D 2794. Minimum 17 Nm impact.

   d. Abrasion Resistance, ASTM D 4060. Less than 90 mm loss on CS-17 wheel, 1000 g/load, 1000 cycles.

   e. Moisture Resistance, ASTM D 4585. Minimum 1000 hours at 38o C with no change in appearance.

   f. Flexibility, ASTM D 522, Cylindrical Mandrel Bend Test. Bend around 12.5 mm diameter mandrel with no cracking.

   g. Adhesion, ASTM D 4541. Minimum 3.5 Mpa on a certified pull test.

C. New Equipment.

1. Signal heads, signal head mountings, brackets and fittings, outside of visors, pedestrian push button housings, pedestrian signal head housings and visors, and back faces of backplates, shall be factory finished with two (2) coats of dark olive green enamel. Painting is not required where the color is an integral part of the component material, or powder coated.

2. Interior of signal visors, louvers, and front faces of backplates shall be factory finished with two (2) coats of lusterless black enamel.

3. After erection, all exterior surfaces shall be examined for damage, and such damaged surfaces shall be cleaned and spot coated with primer and finish coat.

4. Two factory finishing coats of aluminum paint shall be applied to controller cabinets.

5. Controller cabinet shall be painted white inside and silver-gray outside, with under coating inside and out.

D. Reused Equipment.

1. Existing non-galvanized, damaged equipment shall be painted in the field, including Owner-furnished equipment. The equipment shall be washed with a stiff bristle brush using a solution of water containing two tablespoons (2

tbsp/gal) of heavy duty detergent powder per gallon. After rinsing, all surfaces shall be wire brushed to remove all poorly bonded paint, rust, scale, corrosion, grease or dirt. Any dust or residue remaining after wire brushing shall also be removed prior to priming.

2. Factory or shop cleaning methods for metals will be acceptable if equal to the methods specified herein.
3. Immediately after cleaning, all bare metal shall be coated with Pre-Treatment, Vinyl Wash Primer, followed by two (2) prime coats of Zinc Chromate Primer for Metal.
4. Signal equipment, excluding standards, shall be given a spot finishing coat on newly primed areas, followed by one (1) finishing coat over the entire surface.
5. Ungalvanized standards shall be given two (2) spot finish coats on newly-primed areas.
6. All paint coats may be applied either by hand brushing or by approved spraying machines. The Work shall be done in a neat and workmanlike manner. The Engineer reserves the right to require the use of brushes for the application of paint, should the Work done by the paint spraying machine prove unsatisfactory or objectionable.

Galvanized equipment with rusted areas shall be repaired as provided for in Article 16.3 - Galvanizing.

Article 16.5 Measurement

The Work performed under this section is considered incidental to other Work.

Article 16.6 Basis of Payment

No separate payment is allowed for Work performed under this Section.

SECTION 80.17 CONTROLLER ASSEMBLIES

Article 17.1 General

Each solid-state, traffic controller assembly shall operate various traffic signal devices as shown on the Drawings, to provide right-of-way, clearance and other indications with duration and sequence as determined by preset programming.

Details of operation for the complete controller assembly shall be in accordance with the traffic phases, preferential phase sequence and concurrence, signal indications, signal indication sequence, detection requirements and other details shown on the Drawings or as specified herein.

All controller assemblies shall conform to NEMA Standard Publication TS 2-2003 V02.06 level 2, Traffic Controller Assemblies with NTCIP Requirements as defined in NTCIP1202. Traffic Controller Assemblies shall meet or exceed the Environmental Requirements of Section 2 of the NEMA TS2-2003 V02.06 document. The Original Equipment Manufacturer (OEM) and its manufacturing and testing facilities shall be ISO 9001:2000 certified for processes involving the Traffic Controller Assemblies.

The cabinet shall be 100% compliant with Section 1605 of the American Recovery and Reinvestment Act of 2009, requiring the use of American iron, steel and manufactured goods.

The cabinet assembly shall be completely manufactured in the United States of America.

LED indicators shall be used for all electronic devices covered under Article 80.17.

Controllers shall be compatible with the existing Anchorage traffic control system and contain necessary internal communication modems. Compatibility must be 100% at the cabinet level to include inputs, outputs, telemetry protocol, and block upload and download of RAM data.

Manufacturer schematic shall be submitted to the Traffic Engineer or designated representative prior to approval of all controller assemblies.

The existing traffic signal monitoring system is Centracs ATMS by Econolite

Features of the existing local controllers and controller modules must be functionally duplicated to meet or exceed the performance of the existing equipment.

The existing local controller cabinets at other intersections include the following equipment: Econolite ASC/3-2100

Article 17.2 Controller Unit

Actuated Controller Unit (CU).

Provide solid state, Type A2N Actuated Controller Units (CU) meeting the requirements of Section 3 of the NEMA Standard Publication TS 2-2003 V02.06, Traffic Controller Assemblies with NTCIP Requirements.

1. The CU must meet the referenced National Transportation Communications for ITS Protocol (NTCIP) and comply with publication TS 3.2 the Simple Transportation Management Framework, and shall meet the requirements for Conformance Level 2

2. The software shall comply with NEMA TS 3.3, the Class B Profile, and shall include both an EIA/TIA 232-E and an FSK modem interface for NTCIP based communications.

3. The CU shall implement conformance groups and optional object groups as defined in NEMA TS 3.4 and TS 3.5 for A2N level 2.

4. Provide controllers with display heaters or enhancements to improve viewing in temperatures below 0 □F.

5. Provide controllers having an interface compatible with SYNCRO-7 traffic modeling software.

Furnish two (2) Econolite Cobalt ATC Touch 2100 controller unit or approved equal also meeting the following requirements:

A. HARDWARE

1. Enclosure

a. Compact the controller to fit in limited cabinet space. It shall rest on a shelf that is not more than 7" deep. External dimensions shall be no larger than 10 1/4" x 15 1/4" x 9" (H x W x D).

b. Construct the enclosure of aluminum and finish with an attractive and durable protective coating. Permanently display model, serial number, and program information on the top surface.

2. Electronics

a. Modular electronics with vertical circuit boards. Horizontal circuit cards are not acceptable.

b. Use a microprocessor for timing and control functions. Verify continuing operation of the microprocessor by an independent monitor circuit that is set an output and indicate an error message if a pulse is not received from the microprocessor within a defined period.

c. In the interest of reliability, do not use sockets for any electronic device. Devices must be directly soldered to the printed circuit board. Use surface mount parts for the majority of the electronic components in the controller.

d. Use a built-in, high-efficiency switching power supply to generate required internal voltages as well as 24 VDC for external use. Regulate voltages and monitor with control signals. Mount the fuses on the front of the controller for 120 VAC input and 24 VDC output.

e. Derive timing of the controller from the 120 VAC power line.

f. Store user-programmed settings and intersection configuration data in Flash Memory. Memory requiring an energy storage device (battery or capacitor) to maintain user data is not acceptable. To facilitate the transfer of user programmed data from one controller to another, a data transfer module (data key) using a separate serial flash memory device is an option. This data transfer module shall be easily removable and

directly accessible from the front of the controller. The controller will not require this module to be present for proper operation.

g. Store controller software in Flash Memory devices. The controller software shall be easily updated without the removal of any memory device from the controller. The use of removable PROMS or EPROMS from the controller is not acceptable. Option to update software on the controller using a Windows based computer. Allow updating the controller software via a serial or Ethernet port from the front of the controller. Updating the controller software shall require the intersection to be in flash for no more than ten seconds using Ethernet file transfer.

h. Printed circuit boards shall meet the requirements of the NEMA Standard plus the following requirements to enhance reliability:

(1) Plated -through holes and exposed circuit traces with solder.

(2) Solder mask material covering both sides of the printed circuit board.

(3) Clearly marked circuit reference designation for components and the polarity of capacitors and diodes adjacent to the component. Designated pin 1 for integrated circuit packages on both sides of printed circuit boards.

(4) Printed circuit board assemblies, except power supplies, coated with a clear moisture -proof and fungus -proof sealant.

3. Front Panel

a. Front of the controller consisting of a panel for the display, keyboard, and connectors for necessary user connections. Maintenance of the electronic circuits and option installation will be possible by opening the front panel only.

b. Required 16-line by 40-character/line alphanumeric liquid crystal display (LCD) to show program, and status information with the display area nominal measurements of 2 1/2" x 4 1/2" (H x W), or larger. Provide, for ease of viewing, backlighting by light emitting diodes and multiple levels of contrast adjustment. Adjustable display contrast with front panel mounted push buttons. The use of user potentiometers for display contrast will not be acceptable.

c. Clearly labeled front-panel operator inputs and environmentally sealed electrometric keys. Including a 10 digit numeric keypad, nine function keys, an oversized ENTER key, and an oversized four arrow cursor control key.

d. Required nine function keys, clearly labeled, and providing the following operation:

MAIN MENU - Pressing the Main Menu key displays the main menu.

SUBMENU - Pressing the Sub Menu key from a data screen displays the current submenu.

NEXT DATA - Pressing the Next Data key searches for the first non-zero data field, thus allowing rapid search for valid entries.

NEXT SCREEN - Pressing the Next Screen key l displays the next screen, thus allowing rapid advancement from screen to screen.

HELP - Pressing the Help key at a data entry field displays a help screen about that field.

STATUS DISPLAY - Pressing the Status Display key presents the intersection status display.

NEXT PAGE - Pressing the Next Page key advances to the previous or next group of data entry screens in a submenu.

BACKLIGHT - Pressing up and down arrow-shaped keys adjusts the backlighting of the LCD display screen for brighter or dimmer contrast.

SPECIAL FUNCTION - Pressing the special function key places Pedestrian Calls while viewing the main status display, lock access to controller data until supervisor or data change access codes are entered, and enter hexadecimal values

CLEAR - Pressing the clear key aborts a data entry and restores the current value.

4. Data Key

   a. A data key available for use as a database storage device (backup) or as a database transfer module capable of storing a minimum 256KB of data.

   b. The data key hot swappable, to be inserted and removed without powering down the controller.

   c. The data key capable of storing the entire controller database and shall retain the information without use of battery or capacitor backup.

   d. The data key is not required by the controller to be present during normal operation.

5. Connectors

   a. Accessible interface connectors from the front of the controller. Controller models able to accommodate different versions, as follows:

      (1) EMA TS2 Type 1

      (2) NEMA TS2 Type 2

      (3) NEMA TS1

   b. Connectors and signals compatible with the Econolite Model ASC/2, ASC/2S & ASC -8000 25 pin telemetry port and D connector.

   c. Capable of assigning special applications of input or output function to any input or output pin respectively on the interface connectors, with the exception of Flashing Monitor, Controller Voltage Monitor, AC+, AC-, Chassis Ground, 24 VDC, Logic Ground and TS2 Mode bits.

6. Serviceability

a. Electronic modules including the power supply easily removable from the front of the controller using a screwdriver as the only tool. Plug in connector for power and signal connections to the circuit boards.

b. Allow the removal and replacement of any circuit boards without unplugging or removing other circuit boards, except for the power supply. No more than two boards shall be attached together to form a circuit assembly.

c. Designed for one side of any circuit board to be accessible for troubleshooting and testing while the controller is still in operation and accomplished without the use of extender cards or card pullers.

B. DISPLAY

1. Dynamic Displays

a. Provide dynamic displays listed below to show the operational status of the controller and offering additional displays for programming. Possible to place vehicle, pedestrian, and preemption calls from the keyboard while displaying status information.

b. Intersection status displaying a summary of ring, phase, coordination, preemption and time-based control status.

c. Controller status display indicating current interval, pedestrian, density, maximum, and maximum extension timing by phase and ring. Display the status of vehicle and pedestrian signal outputs in combination with vehicle and pedestrian calls.

d. Coordinator status display indicating the command source, current coordination pattern information, local and system cycle count, commanded/actual offset, offset correction, time based control status, hold, force off, vehicle permissive, split count down, split extension, offset from ring 1 and green band indications.

e. Preemptor status display indicating priority (railroad, fire, emergency) preemptors and bus preemptors with calls, preemptor active, inhibit, and delay status. When a preemptor is active, the display also indicates preemptor interval, timing, duration, and hold status. A portion of the display indicating the controller status during preemption including current status, interval, and timing by phase and ring and the status of vehicle and pedestrian signals for each phase.

f. Time base status display indicating the current time and date, the current day and week program, the active program step for both coordination pattern and time of day functions, the start time of the next program step, and the highest step used. Also displays the programmed selections of the active coordination pattern and time of day pattern.

g. Communications status displays for Port 1 (SDLC), Port 2 (terminal) Port 3, Ethernet, and NTCIP.

h. Port 1 (SDLC) status display indicating the frame responses from the MMU, the terminal and facilities BIUs and the detector BIUs.

i. Ports 2 and 3 status display indicating the interconnect format, transmit, valid data, data error, carrier detect and the last valid command.

j. An Ethernet status display indicating the line speed, the line status, the total number of transmitted and received counts and transmitted and received error counts.

k. An NTCIP status display indicating the total number of SNMP and STMP transmitted and received counts.

l. A detector status display indicating activity for up to 64 detectors. The display shows the detector calls as processed by the controller.

m. Flash/malfunction management unit (MMU) status display indicating flash status plus MMU channel, conflict, and monitoring function status. A separate display indicating the results of the controller's comparison of its MMU programming to the programming in the controller.

n. An input and output status display indicating the activity of the logic level inputs and outputs to the controller.

2. Programming Displays

a. Programming displays in the form of menus to aid the operator in entering data from the front -panel keyboard.

b. A main menu allowing the user to select a major function of the controller. A submenu shall then be displayed to allow the user to select a sub -function within the major function. A four arrow cursor key allows the user to scroll through programmed data.

c. English language and traffic engineering terminology shall be used throughout to facilitate programming. The display organization allows traffic personnel to program the controller without using reference cards or manuals. Data entry and data screens shall be in logical order.

d. Programming entries consisting of alpha-numerical values, YES/NO and ON/OFF entries. During program entry, new data is displayed as it is entered. Validated and stored entries only when the consistency check is preformed for entries that are constrained by other programmed data or when the ENTER or cursor key is pressed when they are not.

e. An example of constrained data is the sequence of the phases within a ring. Checked with the phase compatibility, phases in the ring and start phases among others.

f. An example of non-constrained data is the vehicular extension time entry.

g. The keyboard entry software shall include context sensitive help screens. Help information accessed by placing the cursor on the data entry in question then pressing the HELP key. Help screens provided for

keyboard entered data and shall include at a minimum range, description, and functional operation information for the data entry.

C. PROGRAMMING

1. Programming Methods

a. Methods listed below shall be available for controller configuration and timing entries. The manufacturer shall be able to provide as off the shelf items firmware and software required to affect the listed methods and to implement network operation with system masters and host PC's.

(1) Manual data entry from the front panel keyboard

(2) Downloading from telemetry from a system master connected to a host PC in a closed loop system.

(3) Downloading from a portable PC-compatible computer via an Ethernet or serial cable.

(4) Transfer from one controller to another using the Ethernet port on each controller.

(5) Transfer from one controller to another, or restoring for a back up copy, using a data transfer module (data key).

2. Programming Security

a. A minimum of three access levels available to provide programming security.

(1) The highest or supervisor level shall have access to programming entries including setting access codes.

(2) The second or data change level shall have access to programming entries except access codes.

(3) The third or data display level shall only have access to displayed data. No access code shall be required to display data.

b. User selectable, four digit access codes provided for the supervisor and data change access levels. Access codes shall initially be set to provide unrestricted access.

c. If there has been no keyboard activity the controller shall automatically logoff the user after 30 minutes.

3. Programming Utility Functions

a. A copy function shall permit copying timing data from one phase to another. It shall also permit copying timing plan from one timing plan to another, one detector plan and detector options plan to another, coordination pattern data from one pattern to another and one sequence to another. This feature will facilitate data entry when programming any two or more phases with the same timing values, or detectors with the same programming, and/or two or more coordination patterns with the same pattern data.

b. The controller unit shall contain a backup data base with user specified values stored in nonvolatile memory. A copy function shall permit transferring the backup database to the active database.

c. A memory clear function shall permit the user to clear data entries for the following controller functions, either individually or all at once:

(1) Configuration

(2) Controller

(3) Coordinator

(4) Preemptor

(5) Time base

(6) Detectors

(7) Logic Processor

d. A sign on message shall allow the user to view the controller software version number. This message shall be displayed upon power up until a key is depressed. It shall also be possible to display the sign on message by keyboard selection. The sign on display shall allow a user defined message of up to two lines with 38 characters per line.

e. The controller shall have the capability to output a memory image of the user programmed settings and intersection configuration data in binary format. This shall allow transferring the memory image data to a data key.

D. ACTUATED CONTROL FUNCTIONS

The controller shall provide actuated control functions and operations required by the NEMA TS2 Standard. In addition, it shall provide the features described in the following paragraphs.

1. Phase Sequence

a. The phase sequence of the controller shall be programmable in any combination of sixteen phases, eight concurrent groups and four timing rings.

b. Phase sequence information shall be changeable from the keyboard and stored in EEPROM data memory.

c. The standard phase sequence of the controller shall also be capable of being altered by coordination, time of day or external alternate sequence command. The alternate sequence commands shall allow reversing the normal phase sequence of each phase pair as shown below:

Command A - reverses phases 1 and 2

Command B - reverses phases 3 and 4

Command C - reverses phases 5 and 6

Command D - reverses phases 7 and 8

Command E - reverses phases 9 and 10

Command F - reverses phases 11 and 12

d. The operator shall be able to select from a library of standard sequences. As a minimum, the following shall be provided:

(1) Standard NTCIP sequence

(2) Two through eight phase controller

(3) Sixteen phase quad left turn controller

(4) Four single ring 4 phase controllers

(5) Dual TS2 eight phase quad controllers

(6) TXDOT three phase diamond controller

(7) TXDOT four phase diamond controller

e. An exclusive pedestrian clearance movement provided that will time and display the pedestrian indications with the vehicle movements remaining in all red.

2. Timing Intervals

a. Timing intervals shall be programmable from 0-255 in one second increments or from 0-25.5 in one tenth second increments, depending on the function.

b. Four independent timing plans provided and selectable on a time of day basis or by coordination pattern. Each plan shall contain the following interval timings:

(1) Minimum Green

(2) Bike Green

(3) Delay Green

(4) Walk

(5) Walk 2

(6) Walk Maximum

(7) Pedestrian Clearance

(8) Pedestrian Clearance 2

(9) Pedestrian Clearance Maximum

(10) Pedestrian Carryover

(11) Vehicle Extension

(12) Vehicle Extension 2

(13) Maximum 1

(14) Maximum 2

(15) Maximum 3

(16) Dynamic Maximum

(17) Dynamic Maximum Step

(18) Yellow Clearance

(19) Red Clearance

(20) Red Maximum

(21) Red Revert

(22) Actuations before Reduction

(23) Seconds per Actuation

(24) Maximum Initial

(25) Time before Reduction

(26) Cars Waiting

(27) Time to Reduce

(28) Min Gap

c. Guaranteed minimum interval values specified at the time of purchase and shall not be changed or overridden from the keyboard. Values provided for the following intervals:

(1) Minimum green
(2) Walk
(3) Pedestrian clearance
(4) Yellow clearance
(5) Red clearance
(6) Red revert
(7) Overlap Green

d. A bike green interval provided that will replace the phase minimum green if the interval time is larger than the min green time and if a detector input designated as a bike detector has been activated.

e. Two Walk and Pedestrian Clearance intervals provided for each phase per timing plan. The second Walk and Pedestrian Clearance activated by a time base action plan.

f. Two vehicle extension intervals provided for each phase per timing plan. The active vehicle extension interval selected by a time base action plan.

g. If enabled, a Delay Green timer shall delay the vehicle phase from starting until the timer has expired. This shall provide an additional all red for the vehicles movement until the timing is complete.

h. The Pedestrian Walk interval shall extend from Walk to the smaller of the Walk Max time or the phase maximum in effect with a constant input from the "Walk Extension detector".

i. Volume density intervals shall include actuations before and cars waiting. Actuations before added shall provide a user specified number of actuations that must occur before adding variable (added) initial time. Cars waiting shall provide a user specified number of actuations, or cars waiting, that must occur before starting gap reduction. Gap reduction shall be initiated by either; time before reduction or cars waiting, whichever reaches its maximum value first.

j. Capable of dynamically extending the maximum green time for each phase based on vehicle demand. Three maximum green intervals shall be selectable per phase based on either time of day, coordination pattern or external input. The initial interval shall be selectable as Max 1, Max 2, or Max 3. If the phase terminates due to max out for two successive cycles, then the maximum green time in effect shall automatically be extended by a dynamic max step interval on each successive cycle until it is equal to dynamic maximum. If the phase gaps out for two successive cycles, then the maximum green time reduces by the dynamic max step time until it reaches to the original max value.

k. Each phase shall have a red maximum timing interval. An input (red extension) shall extend the all red period of the assigned phase as long as the detector input is true. This input must be true within the all red time of the assigned phase to be able to extend the all red period. If this detector fails then the all red extension feature shall be disabled.

3. Overlaps

a. The controller shall provide sixteen internally generated overlaps (A - P). These shall be individually programmable as standard, other (see Section 5.3.2) or minus green / yellow. The green, yellow and red intervals shall be individually programmable following termination of the parent phase. The overlaps programmed as minus green / yellow overlaps shall provide overlap green when any of the overlap phases are green or when in transition between overlapped phases and a modifier phase is not green. The overlap will be yellow when an overlapped phase is yellow and the modifier phase is not yellow and none of the overlapped phases are next.

b. The other overlap option shall provide for protected, pedestrian protected, not overlap, trailing, leading and advance green programming.

c. A protected overlap shall be green, yellow, or red like a normal overlap except its outputs shall be blank when the protected phase is green, or the controller is transitioning to a non included phase.

d. A pedestrian protected overlap shall be green under the following conditions :

(1) When an included phase is green and the protected pedestrian is NOT in walk or pedestrian clearance

(2) When the controller is in transition between included phases and a pedestrian protected phase is not next

(3) After servicing an included phase pedestrian demand if there is enough time before max out to service the overlap minimum green

e. The controller shall provide the capability of sixteen pedestrian overlaps. These shall be capable of overlapping the pedestrian displays of any combination of phases with a pedestrian movement.

f. Overlap functions shall be programmable from the controller keyboard.

g. The controller shall provide a programmable conditional service feature. When selected, the controller shall service an odd numbered phase once normal service to that phase has been completed and enough time for additional service exists on the concurrent even phase.

h. A conditional service minimum green time shall be programmable for each phase. This interval shall ensure a minimum green if the phase is conditionally served.

i. It shall be possible to program the controller to re-service the even phase after conditionally serving an odd phase. Once an even phase has been conditionally re-serviced, the odd phase shall not be conditionally served again until returning to the concurrent group that is timing.

4. Additional Features

a. The following features shall be programmable for each phase in each of four separate detector plans:

(1) Locking/non-locking detector memory

(2) Vehicle recall

(3) Pedestrian recall

(4) Maximum recall

(5) Soft recall No-rest phase

(6) Enable Added Initial

b. Also programmed by phase shall be:

(1) Phase in use

(2) Exclusive Pedestrian phase

c. Soft recall shall return the controller to the programmed phase in the absence of other calls.

d. If a phase is designated as a no rest phase the controller shall not rest in the phase.

e. The controller shall permit power start and external start to be individually programmed by phase and interval. Start intervals shall be green, yellow red, or yellow with overlaps forced yellow.

f. During a power start condition, the controller shall be capable of timing an all red or flash interval before the power start phase(s) and interval are displayed.

g. The controller shall provide guaranteed passage operation on a per phase basis. When selected, this feature shall provide a full passage (vehicle extension) interval when a phase gaps out with a gap in effect less than the vehicle extension interval (preset gap).

h. The controller shall provide both single and dual entry operation. When selected, dual entry shall cause the controller to ensure that one phase is timing in each ring.

i. It shall be possible via keyboard selection to inhibit the service of a phase with other phase(s) within the same concurrent group.

j. The controller shall provide the following additional selectable pedestrian functions:

(1) Actuated phase rest in WALK

(2) Flashing WALK output

(3) Pedestrian clearance protection during manual control

(4) Pedestrian clearance through yellow

(5) Pedestrian indications remain dark with no call

(6) Pedestrian timing shall be capable of being carried over from one phase to another

(7) Programming shall be provided to inhibit re-service of odd phases (left turns) within the same concurrent group.

k. The controller shall provide a programmable simultaneous gap termination feature. When programmed, phases in both rings shall gap

out together in order to terminate the green interval and cross the barrier.

l. The controller shall provide automatic flash selection according to the requirements of the MUTCD. Both the flash entrance and exit phases shall be programmable through the keyboard, and flashing shall be controlled by either setting the fault/voltage monitor output to be FALSE or by flashing through the load switch driver outputs. If flash desired through the load switches, both the phase and flash overlap outputs either yellow or red as selected by the operator. Automatic flash will be selectable by external input, system command, or time of day action plan.

m. The controller provides dimming for selectable load switch outputs. Dimming will be accomplished by inhibiting the selected outputs for alternate half cycles of the 120 VAC line. Dimming controllable by time of day and an external input; both functions must be TRUE for dimming to occur. Programming permits individual dimming of the Green/Walk, Yellow/Ped Clear, Red/Don't Walk outputs for each load switch.

E. COORDINATION

Coordination functions to control intersection cycle lengths, system offset relationships, and phase split percentages provided as a standard feature, with no need for additional modules or software.

1. Coordination Patterns

a. Provide a minimum of 120 coordination patterns. Each pattern allows selection of an independent cycle length, offset value and split pattern. The coordination patterns selected using telemetry (system), hardwire, or non-interconnected (time base) coordination commands.

b. The coordination patterns selected by the coordination command using the following formats:

Pattern. This format allows selecting the coordination patterns directly, that is, commanding Plan 1 selects Pattern 1. Pattern command includes 1-120 patterns, pattern 254 shall select free and pattern 255 shall select flash.

Standard. This format allows selecting the coordination patterns using a pattern number derived from a cycle offset split command. Each pattern assignable to a specific cycle offset split combination. The coordination pattern selected using the formula

(((Cycle – 1) * 20) + ((Split – 1) * 5) + Offset)).

TS2. This format allows selecting the coordination patterns as a function of Timing Plan and one of three offsets. With this format a minimum of 20 Timing Plans available for selection of one of sixty coordination patterns.

c. The following functions programmable in each coordination pattern:

(1) Cycle length
(2) Split pattern
(3) Offset value
(4) Alternate phase sequence
(5) Split and offset in seconds or percentage
(6) Crossing artery pattern
(7) Permissive timing
(8) Action plan
(9) Coordinated phase split extension
(10) Timing plan
(11) Actuated rest in walk
(12) Phase re-service
(13) Ring extension
(14) Split demand pattern
(15) Ring displacement
(16) Directed split preferences
(17) Special function outputs

d. The following functions shall be programmable for each of the 120 Split patterns:

(1) Coordinated phase
(2) Split value by phase
(3) Omit by phase
(4) Min recall by phase
(5) Max recall by phase
(6) Pedestrian recall
(7) Max and Pedestrian recall

2. Cycle Length

a. One cycle length provided for each coordination pattern. The cycle adjustable over a range of 30-255 seconds in 1-second increments.

b. The cycle length serves as the reference time for coordination timing. 6.3. Synchronization

c. For systems with a single system sync pulse, coordination timing synchronized to the leading edge of that pulse that serves as the master zero reference for offset timing.

d. For hardwire systems with multiple sync pulses, the coordinator locks onto the correct sync by trying different syncs and checking for reoccurrence during successive cycles.

e. After a valid system sync pulse has been received the coordinator checks for the proper occurrence of the system sync pulse during each subsequent cycle. If a sync pulse does not occur, the coordinator self syncs and continue to operate with the last set of coordination commands for a programmable number of cycles from 0-255. If a sync pulse does not occur within the programmed period (or until the first sync

pulse is received), the coordinator shall revert to the non-interconnected coordination mode.

3. Offset

   a. Offset normally defined as the time period from the system sync pulse to the beginning of the leading coordinated phase green (local zero). The coordinator capable of referencing the offset to the beginning of the lagging coordinated phase green, coordinated phase yield or start of yellow point.

   b. Offsets shall be programmable using both percent and seconds. The range is from 0-99% of the cycle length in 1% increments or 0-254 seconds in 1 second increments. An offset value of 255 results in free.

   c. Offset changes achieved by adding or subtracting cycle time over a maximum of three cycle periods to allow a smooth transition to the new offset. Other offset change methods may be to add 20% to each cycle or to snap to the sync point once the permissive periods are complete and the coordinated phases are green. Offset correction using dwell also selectable.

4. Split

   a. Each split provides a split interval for each of sixteen phases. The split interval is programmable using percent or seconds. The range is from 0-99% of the cycle length in 1% increments or 0-255 seconds in 1 second increments.

   b. Split interval settings determine the maximum time, including vehicle clearance (yellow and red), for a non-coordinated phase, or the minimum time for a coordinated phase. Phase termination controlled by establishing a force off point for each phase within the cycle. Except for the coordinated phases the force off point is selectable to be a fixed point within the cycle or allowed to float. If floating force offs are selected each phase shall time no more than its own split interval.

   c. During coordination, it shall be possible to operate a coordinated phase as actuated or non-actuated. If a coordinated phase is actuated, vehicle detections shall permit the coordinator to extend a phase beyond the normal yield point. Extended coordinated phase green shall be selectable using the same range as split interval settings (percent or seconds). If actuated coordinated phases are used they shall be able to have actuated or non-actuated (walk rest) pedestrian movements.

5. Permissive Periods

   a. Permissive periods provided to control the time period during coordinated phases released to service calls on non-coordinated phases.

   b. Permissive timing begins at the lead coordinated phase yield point. A yield point automatically computed for the coordinated phase in each ring. The coordinated phase yield point allows the coordinated phases

to yield independent of each other. The yield point is the point that the coordinated phase is released to allow the controller to service calls on non-coordinated phases. The computation takes into account the coordinated phase split interval plus pedestrian and vehicle clearance times.

c. Automatic permissive period operation provided by automatically calculating a permissive period for each non-coordinated phase. The permissive period shall consist of a separate vehicle and pedestrian period computed from the phase split interval and the vehicle/pedestrian minimum time. The controller answers a call only during the associated phase permissive period. However, once the controller has been released to answer a call, remaining phases are served in normal sequence.

d. Single permissive period operation provided by defining a single time period per cycle beginning with the yield point during which the controller is allowed to answer phase calls for any phase. The duration of this period will be selectable in each coordination pattern.

e. Dual permissive period operation provided. During the first permissive period, the controller answers only vehicle or pedestrian calls on the phases following the coordinated phase. If the controller services a call during this period, calls on the remaining phases are served in normal rotation. During the second permissive period, the controller shall answer calls on remaining phases except the first permissive phase. The duration of the two permissive periods, and the time to start the second permissive period (displacement), will be selectable in each coordination pattern.

6. Phase Re-service

a. If actuated coordinated phases are in use, it shall be possible to re-service non-coordinated phases within the same cycle if sufficient time remains. A phase shall be re-serviced only if the permissive period for the phase indicates there is sufficient time remaining in the cycle to service the phase.

b. Phase re-service shall be capable of being enabled/ disabled in each coordination pattern.

7. Transition Cycles

a. The controller provides a smooth and orderly transition when changing from free operation to coordinated operation and from one coordination command to another.

b. During a free to coordinated transition, the controller shall initiate a pick up cycle beginning upon receipt of a sync pulse and a valid coordination command. The controller shall then enter coordination mode upon crossing a barrier or if resting in the coordinated phases.

c. Each coordination command selects a pattern. A command change implements concurrent with a sync pulse. Cycle, offset, and split changes does not take effect until local zero.

8. Crossing Artery Control

a. The coordinator capable of implementing dual coordination at an intersection where two arterials are under control of separate masters.

b. An external input enables dual coordination. Once enabled, the coordinator places a continuous call on the crossing artery phases so as to ensure that these remain green for their full split interval.

c. The coordinator outputs a crossing artery sync signal to indicate the beginning of the crossing artery phase split interval.

d. Dual coordination forces a selectable crossing artery split plan to be used so as to allow a particular split to be optimized for dual coordination in each coordination pattern.

9. Local Split Demand

a. The coordinator provides a minimum of two split demand detector inputs that allow the selection of a preferred split plan based on intersection demand.

b. If the split demand detector indicates continuous vehicle presence during a programmed monitoring period beginning with the onset of a selected phase green, the coordinator forces a selectable split plan to be in effect during the next cycle. This split plan remains in effect for a selected number of cycles from 0 - 255. A specific split plan is capable of being selected in each coordination pattern.

10. Adaptive Split Demand

The coordinator provides a method to select the split using measurement of each phase's green utilization. From the measurement, the coordinator determines which phase or phases had excess time that was not used during the last measurement period. Then the excess time is added to the first set of preferential phases. If the first set of preferential phases gapped out during the last measurement period, then the excess time will be added to a second set of preferential phases. If both sets of preferential phases gapped out during the last measurement period then the time shall be added to the beginning of the coordinated phases.

11. Free Mode

a. The coordinator provides a free mode of operation, where coordination control is removed.

b. Free mode operation is selectable by coordination commands, by external input or by keyboard entry.

c. The coordinator reverts to the free mode when active controller inputs or functions would interfere with coordination. Such inputs or functions include the following:

(1) Manual control enable

(2) Stop time

(3) Automatic flash

(4) Preemption

d. The coordinator provides an active free mode, where coordination control is removed but the coordinator continues to monitor system sync so as to keep its timing in step with the system master.

12. Manual Control

The controller allows manual override of the current coordination command from the keyboard. The manual command allows selection of coordination patterns to be in effect.

13. Interconnect Modes

a. The coordinator capable of operating with any of the following interconnects types:

(1) Non-interconnected coordination (time-based)

(2) Telemetry

(3) Hardwired

b. The coordinator is compatible with fixed time interconnect that provides the sync pulse superimposed on the offset lines. Also operates within an interconnected system using a separate sync line. The non-interconnected coordination mode serves as a backup when using telemetry or hardwired interconnect.

14. Master Coordinator

The coordinator shall output the coordination command, including sync pulse. This will permit the controller to be used as a time of day master in a hardwired interconnected system.

F. PREEMPTION

The controller shall provide a minimum of ten preemption sequences that can be programmed as either railroad-fire emergency or bus vehicle preemption sequences. Preemption capability standard and not requiring additional modules or software:

1. Railroad-Fire-Emergency Vehicle Preemption

a. The ten railroad fire emergency vehicle preemptors selectable as a priority or non-priority Type. Priority preemptor calls overriding non-priority preemptor calls. Low numbered priority preemptors overriding higher numbered priority preemptor calls. Non-priority preemptor calls serviced in the order received.

b. Each preemptor providing a locking and non-locking memory feature for preemptor calls. If a preemptor is in the non-locking mode and a call is received and dropped during the delay time, the preemptor is not serviced.

c. Preemptor timing intervals programmable from 0 - 255 in one-second increments or 0 -25.5 in one-tenth second increments, depending on function. Delay, max presence, and duration timing intervals programmed from 0 – 65535 seconds in one-second increments.

d. A programmable delay time interval shall be provided to inhibit the start of the preemption sequence. This interval shall begin timing upon receipt of a preemption call. This time shall be programmable from 0 - 255 seconds in one second increments.

e. An inhibit time shall be provided as the last portion of the delay time interval. During this time, phases that are not part of the preempt sequence shall be inhibited from service. This time shall be programmable from 0 - 65535 seconds in one second increments.

f. A programmable extend input causing the preemptor to remain in the dwell interval following the removal of the preempt call. If a preempt call is reapplied during this time, the preemptor shall revert to start of dwell interval. This time is programmable from 0 - 25.5 seconds in one tenth second increments.

g. A programmable duration time provided to control the minimum time that a preemptor remains active. This time is programmable from 0 - 65535 seconds in one second increments.

h. A programmable maximum time provided to control the maximum time that a preemptor input remains active and still be recognized by the controller. Once failed, the input must return to inactive state to be recognized again.

i. Phase timing at the beginning of a preemption sequence remains in effect for a minimum time before the controller advances to the next sequential interval. If the phase has been timing for longer than the programmed preemptor minimum time, the controller shall immediately advance to the next sequential interval. Minimum times shall be programmable for the following intervals:

   (1) Green/walk/pedestrian clearance

   (2) Yellow

   (3) Red

j. A phase shall advance immediately to pedestrian clearance if it has been timing a WALK interval at the beginning of a preemption sequence. It shall be possible to time the minimum pedestrian clearance through the yellow interval, or alternately to advance immediately to yellow. During preemption, pedestrian indicators is selectable as being a solid DONT WALK, OFF (blank) or fully operational.

k. If an overlap is in effect when the preemption sequence begins, it shall be possible to terminate the overlap so that it remains red for the remainder of the preemption sequence. Overlaps terminating or forced to terminate shall time the preemptor minimum yellow and red clearance times.

l. Each preemptor provides user programmable green, yellow, and red track clearance intervals. Timing begins immediately after the preemptor minimum red interval.

m. Up to four permissive phases selectable as track clearance phases. During the track clearance period, the selected phases times the track clearance green, yellow and red intervals once, and then advance to the hold interval. If track clearance phases are not selected the track clearance interval omitted from the preempt sequence and is the controller interval timing used if track clearance interval times have been programmed as zero.

n. The preemption hold interval begins immediately after track clearance. It remains in effect until the preemptor duration time and minimum hold times have elapsed and the preemptor call has been removed or the preemptor maximum time has been exceeded. During the preemption hold interval, any one of the following conditions shall be selectable:

   (1) Hold phase green

   (2) Limited phase service

   (3) All red

   (4) Flash

o. Any valid phase, except a track clearance phase, selectable as a hold phase. If hold phases are not selected, the controller remains in all red during the hold interval. If flash is selected for the hold interval, up to two permissive phases shall be selectable to flash yellow, and the remaining phases shall flash red. Overlaps associated with the phases flashing yellow also flashes yellow unless they have been forced to terminate, in which case flashes remain red.

p. The preemptor shall immediately cause flashing operation if the preemption input and the track interlock input are not in opposite states and the track interlock function is enabled.

q. Each preemptor provides a user programmable green, yellow, and red hold interval, during which the hold phase(s) shall operate normally, except that the minimum green interval time shall equal the hold green time. At the completion of the hold green interval, the controller times the hold yellow and red clearance intervals before transfer to the exit phases.

r. Up to four permissive exit phases will be selectable to time after the preemption sequence is completed serving as transition phases to return the controller to normal operation. It shall also be possible to place calls on selected phases upon exiting preemption. The option causes the preemptor to exit preemption to the correct phase to maintain coordination.

s. Each preemptor provides a user programmable exit maximum time. Upon exiting the preemption sequence, times shall serve as the

maximum green time effective for one controller cycle for all phases except hold phases.

t. Preemptor linking permits preemption sequences, where lower priority preemptors may call the higher priority preemptors from their preemption sequence.

u. Preemptor active outputs provided for each of the preemptors. The output sets to ON when the preemption sequence begins and remains ON for the duration of the sequence. Possible to program preempt active outputs to be ON only during preempt hold intervals. Additionally, it shall be possible to program the non-active, non-priority preemptor outputs to flash while another preemptor is active.

v. Preemptors normally override automatic flash. It will be possible to inhibit this feature for each preemptor.

2. Bus Preemption

a. Ten bus preemptors provide control for bus or other low priority vehicles. Bus preemptors have low priority and are overridden by railroad/fire/emergency vehicle preemptor calls.

b. The preemptor is programmed to accept either a 6.25 pulse per second signal with a 50% duty cycle or a solid input to identify a bus preemptor call. Bus preemptor calls shall be capable of preemptor call memory and served in the order received.

c. Bus preemptor timing intervals programmable from 0 - 255 in one second increments or 0 - 25.5 in one tenth second increments depending on the function.

d. A re-service time provided to avoid excessive utilization of the same bus preemptor. If a call is received before the re-service time has elapsed, the bus preemptor shall not be re-serviced. If re-service time has not been entered then all phases with a call when leaving the bus preemption sequence shall be serviced before the bus preemptor may be served again.

e. Bus preemptors shall provide delay, inhibit, and maximum time functions similar to those for railroad/fire/emergency vehicle preemptors described above.

f. Bus preemptors shall provide the following entrance intervals:

(1) Green/walk/pedestrian clearance

(2) Yellow

(3) Red

g. At the completion of the entrance red clearance, the bus preemptor shall advance to the hold green interval. During this interval, up to four permissive phases shall be selectable to remain green until the minimum hold time has elapsed and the bus preemptor call has been removed or the preemptor maximum time has been exceeded.

h. It shall be possible to program the controller to allow concurrent phases to be serviced for a bus preemptor with only one phase selected as the hold interval phase.

3. Preemption Safeguards

a. If a preemptor call is active when power is restored to a controller, the fault/voltage monitor output shall be set to FALSE, placing the intersection in flash. Similarly, if external start is applied during a preemption sequence, the intersection shall be set to flash. Intersection flash shall remain in effect until the preemptor call has been removed and the preemptor duration time has elapsed.

b. An input provided to stop timing of the current active preemptor under control of the MMU/CMU.

c. A preemptor safety interlock provided to cause the intersection to go into flash whenever the controller has been removed or has not been programmed for preemption. This is achieved with an appropriate signal to the MMU/CMU.

4. Transit Signal Priority

a. The controller includes a transit signal priority algorithm that provides for transit vehicle movement through the intersection, while not interrupting coordination or skipping phases.

b. Provide a check in detector input that senses the arrival of the transit vehicle. When active this input initiates Transit Signal Priority (TSP).

c. A TSP delay shall delay the beginning of TSP operation until a set interval after check in.

d. A check out detector input shall determine the departure of the transit vehicle.

e. Assignment of a single pulse from the check in detector and check out detector to the controller inputs programmable to any controller input. Including, inputs from devices that continuously pulse (pulsing as long as the vehicle requires TSP) through EVP 1 - 4, for a controller with a C1 connector, or through Preemptor inputs 3 – 6, on a controller with an MSD connector.

f. When under coordination the TSP sequence shall use alternate split times to accommodate transit vehicles while maintaining coordination.

g. When under free operation the TSP sequence uses alternate maximum times to accommodate transit vehicle while not skipping phase.

G. TIME-BASED CONTROL & NON-INTERCONNECTED COORDINATION

The controller shall include time based control. This capability is a standard feature and shall not require additional modules or software.

1. Clock/Calendar Functions

a. The controller shall provide a time of day (TOD) clock that is used for all time based control functions. The only required clock settings are the current time (hour, minute and second) and date (month, day and year). Day of week and week of year are automatically computed from the date setting. Also possible to set the number of hours that the local standard time is ahead or behind Greenwich Mean Time.

b. During normal operation, the TOD clock shall use the power line frequency as its time base. When power is removed, a crystal oscillator maintains the time for up to 30 days. The oscillator has a timing accuracy of +/ - 0.005% over the entire NEMA temperature range as compared to the Universal Coordinated Time Standard.

c. In addition to entering time and date via the keyboard, it is possible to download the information from another controller, a computer, or a system master.

d. The controller includes a time reset input. This feature resets the TOD clock to 03:30 whenever the time reset input is TRUE.

e. The TOD clock automatically compensates for leap year and shall be programmable to automatically switch to daylight savings time.

2. Time Based Control

a. Time based control utilizes a day plan program format. The month program consists of 200 programmable schedules, each assignable to one of sixteen day programs. Each day program consists of from 1 to 50 program steps that define a program for the entire day. Each program step is programmed with a starting time and an action plan number. The day plans are also assigned to days of the week and days of the month.

b. Time based control shall use action plans to assign:

(1) Coordination pattern number

(2) Vehicle detector plan number

(3) Controller sequence

(4) Timing plan

(5) Vehicle detector diagnostic plan

(6) Pedestrian detector diagnostic plan

c. Time based control shall also use action plans to enable:

(1) Automatic flash

(2) System override

(3) Detector log

(4) Dimming

(5) Special functions

(6) Auxiliary functions

(7) By-Phase functions

(a) Pedestrian recall - Walk 2 enable

(b) Vehicle extension 2 enable

(c) Vehicle recall

(d) Vehicle max recall

(e) Max 2 enable - Max 3 enable

(f) Conditional service inhibit

(g) Phase omit

d. A minimum of 36 holiday or exception day programs that override the normal day program. Holiday programs capable of being set as floating (occurs on a specific day and week of the month) or fixed (occurs on a specific day of the year) and, possible to program a fixed holiday so that it automatically repeats in the following year.

e. Possible to manually force any of the action plans to override the current action plan. The forced plan entered from the keyboard and remains in effect until removed.

3. Non-Interconnected Coordination

a. A minimum of 200 time base schedule programs shall be available for the day-programs. These shall not have to be entered in any special sequence. It shall be possible to add and delete steps from a day program without affecting any other day-program. Each of the program steps shall permit selection of the following functions:

(1) Day program assignment

(2) Start time

(3) Action plan

b. Selection of system override in an action plan allows the coordination pattern selected by the action plan to override the current telemetry or hardwire system commanded coordination pattern.

c. When operating in the non-interconnected coordination mode the synchronization point for cycles references to a user selected reference time (sync reference), last event or last sync as selected from the keyboard. The sync reference time is that time at that cycles are reset to zero.

d. If the sync reference time is selected, the synchronization point for the cycle selected by the current program step is computed using the present time, sync reference time, and cycle length. The synchronization point occurs whenever the present time is an even number of cycle length periods has occurred since the sync reference time.

H. DETECTORS

1. Detector Functions

The controller provides a minimum of 64 vehicle detector inputs. Each input is assignable to any phase and programmable as to detector function. Extend and delay timing is provided for each detector. Each detector is

capable of operating in a lock or non-lock mode. The controller is capable of providing 16 pedestrian detector inputs. Each pedestrian detector shall be assignable to any phase.

2. Detector Cross Switching

   The controller provides detector cross switching that permits vehicle detectors to alternately place calls on assigned phases and assigned cross switch phases. If the assigned phase is not green and the cross-switch phase is green, the detector places calls on the cross switch phase. If the assigned phase is omitted, for any reason, the detector places calls on the cross switch phase.

3. Detector Types

   Each vehicle detector is user programmable to operate as one of the following 3 detector types:

   Type 0 (zero): supports all NTCIP or standard detector functionality.

   Type 1: (GREEN DELAY) The first detection received when the phase goes green is recognized immediately, whether the detector is active when green starts or is activated after the green is timing. Detections received before the first timeout of the extension interval are also recognized immediately. Once the detector extension interval (not the phase extension interval) times out, further detector inputs are recognized only if continuously present for a period equal to the programmed delay time AND the delayed signal is NOT extended. The first detection received when the phase goes green, whether present when green starts or received later, is recognized immediately. Detections received before the first timeout of the extension interval are also recognized immediately. Once the detector extension interval (not the phase extension interval) times out, further detector inputs are recognized only if continuously present for a period equal to the programmed delay time AND the delayed signal is NOT extended.

   Type 2: (STOP BAR WITH EXTEND TIME AND RESET) The detector input must be true when assigned phase green starts else the detector is disconnected for the balance of phase green. If the detector input is true when phase green starts the extension timer is reset while the input remains true. When the detector input is removed the extension timer begins running. If another detector input is received before extension time expires, the extension timer is reset for the duration of the input and once again begins timing when the input goes false. This action is repeated until the extension timer times out, at which time it is disconnected for the balance of phase green.

4. System Detectors

   a. Each detector input shall be capable of functioning as one of 16 system detectors.

b. Vehicle detectors shall be capable of being assigned to a minimum of 16 speed detectors. Speed shall be detected using both one and two detector configurations. Speed shall be computed using a keyboard entered average vehicle length and loop length for a one detector configuration. When using two detectors, speed shall be calculated using a keyboard entered distance between detectors and travel time between detectors.

I. SYSTEM COMMUNICATION

1. On-Street Master Communications

The controller is capable of communicating with an on street system master. This capability provided by a separate telemetry module that is included in the controller when required by the plans and specifications. The telemetry module receives system master commands and data transmissions. In addition, it transmits the controller status, data base and system detector information to the system master.

2. System Commands

a. The telemetry module allows the controller to receive, as a minimum, the following commands:

(1) Cycle, offset, and split (coordination pattern)
(2) System sync
(3) Special function commands (minimum of four)
(4) Free and flash mode commands
(5) Time and date
(6) Request for local status
(7) Recall to Max

b. Commands must occur more than once in any three second period in order to be recognized.

c. Mode and special function commands cleared after 20 minutes of loss of communication between controller and system master.

d. Status Data – The status of each of the following functions shall be transmitted to the system master in response to a local status request:

(1) Green and yellow status for all phases and overlaps
(2) Walk and pedestrian clearance status for all phases
(3) Vehicle and pedestrian detector status
(4) Phase termination status
(5) Local time
(6) Coordination status
(7) Command source
(8) Sync or transitioning status of coordinator
(9) Conflict flash status
(10) Local flash status

(11) Preempt activity and calls

(12) Volume and occupancy data from a minimum of 16 system detectors

(13) Speed data from a minimum of two speed detectors

(14) Maintenance required (cabinet door open) status

(15) Status of two user-defined alarms

e. Split Reporting – The status of each of the following parameters calculated on a per-cycle basis and transmitted to the system master:

(1) Actual time spent in each phase

(2) Time of day at end of cycle

(3) Phases forced off during cycle

(4) Type of coordination operation

(5) Whether transitioning to new offset

(6) Cycle, offset, and split in effect during last cycle

(7) Flash status if operation is Free

f. Upload/Download Capability – The telemetry module provides the capability to upload/download the entire intersection database. Phase assignments for overlaps and preemptors are not to be downloaded to preclude unsafe controller operation. It is possible to inhibit downloading of phases in use and left turn head control. Data transfer shall not require the intersection to be in flash.

3. Telemetry

a. Telemetry shall utilize TDM/FSK data transmission from 1200 baud to 9600 baud over two pairs of wires. These may be leased lines (Type 3002, voice grade, unconditioned) or dedicated cable. Optional fiber optic communications capability shall also be available.

b. The nominal transmitter output level shall be 0 dBm into a 600 ohm load. The receiver sensitivity shall be -34 dBm and adjustable from -40 to +6 dBm.

c. Parity and error checking employed to assure transmission and reception of valid data. Indicators provided on the telemetry module to show telemetry activity as follows: transmit, receive carrier, and valid data.

d. In the event of a telemetry failure, the controller shall revert to the non-interconnected coordination mode after it has self synchronized for a number of cycles, which shall be selectable from 0-255.

4. Communications Protocols

The controller has the capability of supporting communications with traffic management systems using industry standard protocols with the installation of appropriate optional software. At a minimum the controller has optional software to support the following protocols:

CalTrans AB3418

ECPIP

NTCIP

Level 2 as defined by Section 3.3.6 of NEMA TS2 - 2003. NTCIP v02.06 capabilities shall include for NTCIP mandatory and optional objects. The controller vendor provides access to controller data via vendor specific objects. These and other objects supported by the controller are defined in a standard MIB file.

5. Ethernet Communications

The controller has the capability of supporting communications through Ethernet. This communications uses internal circuitry. The Ethernet port supports auto sensing of 10/100 Base T and half or full duplex operation.

6. External Clock

The controller has the capability of communicating with an external clock like a GPS or WWV clock in order to set its internal time of day clock.

7. Communications Ports

a. The controller shall have as a minimum the following internal communications ports:

(1) Port 1- SDLC for communications to other devices in the cabinet

(2) Port 2 - Terminal port for communications with a computer for the purposes of uploading, downloading or upgrading the controller software

(3) Port 3 - Systems communications port. This port provides either communicate to an on-street master or a central computer system

(4) An option circuit board is available to expand communications by adding two additional serial communications ports

b. Serial communications shall operate at 1200 to 115.2 K baud

J. DIAGNOSTICS

1. General Diagnostics Features

a. The controller includes both automatic and operator initiated diagnostics. This capability is a standard feature and shall not require additional modules or software.

b. Automatic diagnostics verifies memory, MMU compatibility programming, and microprocessor operation each time power is reapplied to the controller. After power has been applied, diagnostics continually verify the operation of essential elements of the controller including at a minimum: PROM, EE PROM, communications, and the microprocessor.

c. Operator initiated diagnostics allows the operator to verify proper operation of controller input, output, communications, keyboard, and display functions. Both manual and automatic test modes are provided.

2. Detector Diagnostics

a. Time of day controlled detector diagnostics provided to allow testing vehicle and pedestrian detectors for no activity, maximum presence, and erratic output.

b. A minimum of eight detector diagnostic plans provided. These plans shall be selectable on a time-of-¬day basis. This allows varying the detector diagnostic intervals to correspond with changes in detector activity.

c. If a detector is diagnosed as failed, the associated phase is placed in one of the following keyboard selectable modes:

(1) Detector fail recall from 1 to 255 seconds

(2) Maximum Recall

(3) Disable the detector from calling or extending.

d. Diagnostics for NEMA TS2 detectors connected to the controller using a Bus Interface Unit (BIU) shall also include detection of watchdog, open and shorted loop, and excessive inductance change failures.

K. LOGGING

The controller shall be capable of logging and reporting detector activity, detector failures, and the occurrence of selected events or alarms. Logs shall be capable of being printed or displayed on the front of the controller.

1. Detector Logging

a. The controller includes a detector log buffer capable of logging volume, occupancy and average speed for selected vehicle and speed detectors.

b. The detector logging interval has keyboard selectable as 5, 15, 30, or 60 minutes.

c. Detector logging is capable of being enabled or disabled by time of day.

2. Detector Failure Logging

a. The controller includes a detector failure log buffer capable of storing a minimum of 100 time and date¬ stamped detector failure events. Once logged, detector failure events remain in the log until cleared or the log buffer capacity is exceeded at which time the oldest detector failure events shall be overwritten.

b. Detector diagnostic failures are recorded in the detector failure log including: no activity, maximum presence, erratic output, watchdog failure, open loop, shorted loop, and excessive inductance change. If a detector recovers after a diagnostic failure, a detector on-line event shall be stored in the detector failure log.

c. Detector failure logging shall be capable of being disabled.

3. Event Logging

   a. The controller includes an event log buffer capable of storing a minimum of 200 time and date stamped events or alarms. Once logged, events remains in the buffer until cleared or the log buffer capacity is exceeded at which time the oldest events shall be overwritten.

   b. At a minimum the following events logged: communication failures, coordination faults, MMU and local flash status, preempt, power ON/OFF, low battery, and status of a minimum of two alarm inputs, and an on line event logged when an event or alarm returns to normal status.

   c. If security is enabled, an event logged when a user enters a data change. This event includes the user's ID. It is necessary to log the first change only and not every change. Also an entry is recorded when a user logs in and out of the controller.

   d. Event logging shall be capable of being enabled or disabled for each category of event or alarm.

4. OE logging

   a. The controller accumulates phase utilization data, phase termination data, and detector data for a number of cycles selectable by the operator.

   b. The MOE log includes the number of gap outs, force offs and max outs per phase.

   c. The MOE log includes the mode of operation and phase utilization. If the controller is operating under coordination, the log shall include the pattern in effect and the average phase split for each period. If the controller is operating free, the log shall include the timing plan (1 – 4), the maximum in effect and the average phase maximum for each period.

   d. Each logged period includes the volume, number of stops and the delay per phase.

   e. Each log period records the number of times a phase was skipped and the number of times walk was served per phase.

L. EMULATION

Emulation Software. With each controller provide software designed to emulate the controller. The emulation software shall employ the full functionality of the controller including but not limited to:

Configuration, timing, coordination, preemption, time base, detector setup, status display, utilities including special logic and diagnostic information.

The software shall employ a graphical user interface that looks and acts like the controller. The software shall be designed to operate on the latest Microsoft Windows operating system and be capable of direct interface with the latest version of Transoft Synchro traffic modeling software.

Article 17.3 Standard Auxiliary Equipment

Provide equipment meeting the requirements of Section 6 of the NEMA Standard Publication TS 2-2003 V02.06, Traffic Controller Assemblies with NTCIP Requirements (NEMA TS-2).

A. Three Circuit Solid State Load Switches. The cabinet shall come with (16) load switches. All load switches shall be cube type and have LED indications for both the input and output side of the load. The load switches shall be PDC model SSS87I/O or approved equivalent.

B. Solid State Flasher. The cabinet shall come with (1) flasher. The flasher shall be cube type and have LED indications. The flasher shall be PDC model SSF87 or approved equivalent.

C. Malfunction Management Unit (MMU). The cabinet shall come with two (2) (MMU's) that meets all the requirements of NEMA TS2-2003 while remaining downward compatible with NEMA TS1. It shall have (2) high contrast LCD displays and an internal diagnostic wizard. It shall come with a 10/100 ethernet port. It shall come with software to run flashing yellow arrow operation. The MMU's shall be an Eberle Design, Inc. model MMU2-16LEip or approved equivalent.

D. Flash Transfer Relay. The cabinet shall come with (8) heavy duty flash transfer relays. The flash transfer relays. The relays shall be Detrol Controls model 295 or approved equivalent.

E. Inductive Loop Detectors Units. Provide sixteen (16) inductive loop detectors that conform to the requirements of NEMA TS-2, Section 6.5 Inductive Loop Detector Units. Unless otherwise called for in the Plans provide 4 Channel Inductive Loop Detectors.

The loop amplifiers shall be Eberle Design, Inc. model ORACLE4e or approved equivalent.

F. Local Coordination Units. Provide actuated coordination that conforms to the requirements of NEMA TS-2, Section 3.6 Actuated Coordination.

G. System Modem/Interface Unit. The cabinet shall come with an 8 pair copper ethernet switch. Four ports of 10/100TX and a 1000base SFP port. The ethernet switch shall support all of the following minimum requirements; EFMplus technology, virtual local area networks (VLAN) tagging (IEEE 802.1q) and dynamic bridging (IEEE 802.1). The copper ethernet device shall provide for communication over copper pairs split into two directions and the high speed link shall be over bonded copper pairs (IEEE 802.3ah 2Base-TL. The copper ethernet switch shall be an Actelis Networks model ML688 or approved equivalent. The following items shall be supplied with the copper ethernet switch:

1. Two quad DSL cables 504R20110
2. One AC power adapter 506R00005
3. Four Cat6 patch cables three feet
4. One SFP Optics 100base FX SM 1310nm 15km LC 506R00032
5. Carrier-class element management system
6. Wall mounting kit 510R21080

H. Preemption Units. Provide preemption that conforms to the requirements of NEMA TS-2, Section 3.7 Preemption and the following:

Install the following components of the GTT Company's Opticom Priority Control System according to GTT's written installation instructions at the signalized intersections listed on the Drawings.

1. The system must be capable of sending a signal to the controller when an Opticom signal from a vehicle-mounted "GTT OPTICOM Emitter" has been received and maintained for a period of 1.7 seconds.
2. Use Opticom Priority Control System Model 792H emitters.
3. Unless otherwise shown on the Plan use Opticom Traffic Control Systems Opticom Detector Model 721 preemption detectors.
4. Furnish two (2) Opticom Traffic Control Systems 764 Phase Selectors. Use rack mounted phase selectors.
5. The controller cabinet shall be wired with a Model 768 Auxiliary Interface Panel and a Model 757 Auxiliary Harness for the full utilization of all auxiliary detector and green sensing operations of the 764 Phase Selectors.
6. The controller, rather than the phase selector or auxiliary logic, must perform interval timing, signal sequences, and phase skips.
7. When emitters are required, provide GTT Opticom Priority Control System, Model 792H Emitter with 793 in vehicle switch. The Emitter shall be factory programmed to the class and vehicle identification numbers assigned by jurisdiction as shown in the Drawings and the following:
   a. Class 0 and Vehicle ID. Number 0 (Zero) shall be disabled for Emitters.
   b. Vehicle Id. Numbers shall be sequential, beginning with the lowest number in the EVP Emitter table for the appropriate class.
   c. Provide one copy of 790IS Emitter Software Kit including "Y" cable.
   d. One GTT Opticom Portable Emitter Kit with 792R emitter on a magnetic base, 793R switch and cigarette lighter adapter power cord in a "Camera Bag" case.

I. Bus Interface Unit (BIU). Provide six (6) BIUs that fully meet the requirements of NEMA TS-2 Section 8. Unless otherwise called for in the Plans provide BIUs that meet the NEMA designation BIU2. All BIUs shall provide separate front panel indicator LED's for DC power status and SDLC Port 1 transmit and receive status. The (BIU)'s shall be Eberle Design, Inc. model BIU700 or approved equivalent.

J. Power supply. Provide a shelf mounted power supply that conforms to the requirements of NEMA TS-2 Section 5.3. The power supply shall be Eberle Design, Inc. model PS250 or approved equivalent.

Article 17.4 Special Auxiliary Equipment

When identified on the Drawings, provide equipment meeting the requirements of the cited Sections of the NEMA Standard Publication TS 2-2003 V02.06, Traffic Controller Assemblies with NTCIP Requirements (NEMA TS-2).

A. Pan Tilt Zoom Video Camera System

Furnish Sony SNC-EP550 PTZ Camera and Omnicast Pro camera connection license (Om-P-1C) for Omnicast 4.5 or an approved equal Camera and Software License. The products listed in this subsection are subject to review and approval. The equipment must meet or exceed the following specifications:

1. Camera Specifications
   a. Operate through IP communications
   b. Pan -170° to 170°
   c. Tilt -90° to +30° to +30°
   d. Electronic shutter of 18x optical zoom and 216x digital zoom
   e. 1/4 type CCD Imager (Exwave HAD Technology)
   f. Effective pixels of 768 x 494
   g. Horizontal resolution of 470 TVL
   h. Minimum illumination of 0.7 lux color and 0.06 lux black & white
   i. Focal length of 4.1mm to 73.8mm
   j. F-Number of F1.4(wide) and F3.0(tele)
   k. Auto/Manual iris (F1.4 to close)
   l. Selectable compression format of JPEG or MPEG4
   m. Minimum object distance of 300mm (wide) and 800mm (tele)
   n. Selectable image sizes of 640 x 480, 480 x 360, 384 x 288, 320 x 240, 256 x 192, 160 x 120
   o. Selectable frame rates of 18fps JPEG, 15fps MPEG at VGA, 30fps JPEG/MPEG4 at QVGA
2. Analog Video Output Specifications
   a. Signal-to-Noise ratio must be greater than 50db.
   b. Signal system must be NTSC composite
3. Interface Specifications
   a. Compact flash interface for SNCA-CFWI IEEE802.b Wireless Card or Compact flash memory.
   b. Network interface of 10Base-T100Base-X (RJ-45)
   c. Serial interface of RS232C (Transparency function or VISCA protocol)
   d. 2 I/O sensor input ports and 2 I/O sensor alarm out ports
   e. Mini-jack external microphone input, 2.4V DC plug-in power, 4.7KΩ
   f. A BNC analog composite video output, 1.0 Vp-p, 75Ω
   g. A mini-jack (mono) audio line output, max output level of 0.9 Vrms

4. General Specifications
   a. Weight of 2lbs 14 oz
   b. Dimensions (W x H x D) of 5-5/8 x 8-7/8 x 5-7/8 inches
   c. Power requirements of 12V DC or 24V AC
   d. Power consumption of 18W maximum
   e. Operating temperature between (32 °F to 104 °F)
   f. Storage temperature between (-4 °F to 140 °F)
   g. Storage Humidity between 20% to 95% Non-condensing
   h. Required general functions are Day/Night (Auto/Manual), image flip, auto focus and motion detection
   i. Compatible Protocol of IP(IPv4), ICMP, ARP, TCP/UDP, RTP/RTCP, SNMP (MIB-2), DHCP client, NTP client, DNS client, HTTP, FTP, and SMTP client
   j. 10 MPEG-4 clients and 20 JPEG clients
   k. Outdoor vandal resistant housing with H/B, pendant mount for SNC-RH124, RS44N, RS46N, RX-series, and RZ25N, clear lower dome
   l. 8Mb compact flash (CF) type card included
   m. 3 year warranty included
5. System Requirement Specifications
   a. Compatible operating systems of Windows 2000/XP/Vista/7
   b. Compatible web browser of Microsoft Internet Explorer® 5.5 or 6.0 or later

B. Video Detection System.
1. General.
   a. System Hardware. Use machine vision system hardware consisting of the following components:
      (1) Color Machine Vision Processor (MVP) sensors as shown in the Plans
      (2) Terra Access Point (TAP)
      (3) Communication interface panel
      (4) Personal computer (PC)

      The PC shall host the server and client applications that are used to program and monitor the other system components. The MVP sensor shall be an integrated color zoom camera and processor that perform real-time traffic detection. Each MVP sensor shall be programmable with a minimum of twenty detection zones to satisfy the traffic detection needs of a variety of simple to complex traffic applications. The detection zones shall be user-defined though interactive graphics software running on a PC. The detection

zones and the associated traffic functions and alarms shall be downloaded to the MVP for operation. The real-time performance shall be observed by viewing the video output from the sensor with overlaid flashing detector's to indicate the current detection state (on/off). Subsequent redefinition of detection zones shall be permitted for rapid reconfiguration of fine-tuning detection performance. The MVP sensor shall calculate detector states in real-time and communicate the detection information to the TAP that subsequently translates the detection state directly to a traffic signal controller in real time. The MVP sensor shall optionally store cumulative traffic statistics, internally in non-volatile memory, for later retrieval and analysis.

The MVP shall communicate to the Terra access Point, communications panel and the software applications using the industry standard TCP/IP network protocol. The MVP shall have a built in Internet Protocol (IP) address and shall be addressable with no plug in devices or converters required.

The Terra Access Point shall communicate directly with up to eight (8) MVP sensors and shall comply with the form factor and electrical characteristics to plug directly into a NEMA Type C or D detector rack providing up to thirty-two (32) inputs and sixty-four (64) outputs directly with a TS2 Type traffic signal controller.

The communication interface panel shall be hardwired into a traffic signal cabinet or junction box. The communication interface panel shall be a Eight-sensor model and provide the electrical termination of wiring for video, data, and power for the MVP.

The communication interface panel shall provide high-energy transient protection to electrically protect the Terra Access Point and connected MVP sensors.

b. System Software. The MVP sensor embedded software suite shall incorporate multiple applications that perform a variety of diagnostic processing. Its primary function is to detect vehicular traffic approaching or departing the MVP sensor in multiple traffic lanes. The detection shall be reliable, consistent, and perform under all weather, lighting, and traffic congestion levels.

There shall be a suite of client applications that reside on the host client/server PC. The applications shall execute under Microsoft Windows 98, 2000, Windows NT, and XP. Available client applications shall include:

(1) Network Browser: Learn a network of connected Terra Access Pints and MVP's then show the topology in a logical hierarchical relationship

(2) Detector Editor: Create and modify detector configurations to be executed on the MVP sensor

(3) Operation Log: Extract the MVP run-time operation log of special events that have occurred.

(4) Data Archive: Extract time interval cumulative traffic statistics in real time (on the same time interval spacing) or after long periods of data accumulation (for instance, once a day or once a week, etc.)

(5) Software Installer: Reconfigure one or more MVP sensors with a newer release of embedded system software.

2. Functional Capabilities

a. MVP Image Sensor. The MVP image sensor shall be an integrated imaging color CCD array with optics, high-speed image processing hardware and a general purpose CPU bundled into a sealed enclosure. The MVP Sensor shall be equipped with a sunshield to reflect solar heat and to shield the CCD array from direct exposure to the sun. The CCD array shall be directly controlled by the general purpose CPU, thus providing high video quality for detection that has virtually no noise to degrade detection performance. The optics and camera electronics shall be directly controlled for optimal illumination for traffic detection. The lens shall be pre-focused at the factory, as required for operation. It shall be possible for the user to zoom the lens, as required for operation. The MVP sensor shall operate at a maximum rate of 30 frames per second when configured for the NTSC (US) video standard. The MVP shall process a minimum of twenty detector zones simultaneously placed anywhere in the field of view of the sensor. The video output shall have the ability to selectively show overlaid graphics indicating the current real-time detection state of each individual detector defined in the video. The sensor output NTSC video shall be viewed with any compatible video-display device.

b. Differential Video. The MVP sensor shall output full motion color video through the means of a differential video port in NTSC format. The differential video is transmitted over a single twisted pair.

c. Power. The MVP sensor shall operate on 24 VAC, 50/60Hz at a maximum of 25 watts. The camera and the processor electronics shall consume a maximum of 10 watts and the remaining 15 watts shall support an enclosure heater.

d. MVP Operations Log. The MVP shall maintain a non-volatile operations log, which minimally contains:

(1) Revision numbers for the current MVP sensor hardware and software components in operation.

(2) Title and comments for the specific detector configuration file downloaded to the MVP.

(3) Date and time the Operations Log was last cleared.

(4) Date and time communications were opened or closed with the MVP.

(5) Date and time of last power-up.

(6) Time stamped MVP self diagnosed hardware and software error to aid in system maintenance and troubleshooting.

e. MVP Vehicle Detection. The real time detection performance of the MVP shall be optimized by following the set of guidelines for:

(1) The traffic application to perform,

(2) MVP sensor mounting location,

(3) The number of traffic lanes to monitor,

(4) The sizing, placement, and orientation of Count and Presence detectors,

(5) Traffic approaching and/or receding from the sensor's field of view,

(6) Minimizing the effects of lane changing maneuvers.

f. Detection Zone Placement. The video detection system shall provide flexible detection zone placement anywhere and at any orientation within the field of view of the MVP sensor. Preferred detector configurations shall be:

(1) Detection zones placed across lanes of traffic for optimal count accuracy or

(2) Detection zones placed parallel to lanes of traffic for optimal presence detection accuracy of moving or stopped vehicles.

A single detection zone shall be able to replace one or more conventional detector loops connected in series. Detection zones shall be able to be overlapped for optimal road coverage. In addition, selective groups of detectors can be logically combined into a single output by using optional delay and extend timing and signal state information. Optimal detection shall be achieved when the MVP sensor placement provides an unobstructed view of each traffic lane where vehicle detection is required. Examples of obstructions are not limited to fixed objects. Obstruction of the view can also occur when vehicles from a lane nearer to the sensor obscure the view of the roadway of a lane farther away from the sensor.

g. Detection Zone Programming. Placement of detection zones shall be by means of a supervisor computer (PC) operating in the Windows 98, 2000 or Windows NT graphical environments, a keyboard, and a mouse. The monitor shall be able to show the detection zones superimposed on images of traffic scenes.

The detection zones shall be created by using a mouse to draw detection zones on the supervisor computer's monitor. Using a mouse and the keyboard it shall be possible to place, size, and orient detection zones to provide optimal road coverage for vehicle detection. It shall be possible to download detector configurations from the supervisor computer to the MVP, to retrieve the detector configuration that is currently running in the MVP, and to back up detector configurations by saving them to the supervisor computer's removable or fixed disks.

The supervisor computer's mouse and keyboard shall be used to edit previously defined detector configurations to permit adjustment of the detection zone size and placement, to add detectors for additional traffic applications, or to reprogram the sensor for different traffic applications or changes in installation site geometry or traffic rerouting.

h. Detection Zone Operation. The MVP real time detection operation shall be verifiable through several means. The primary method shall be to view the video output of the sensor with any standard video display device (monitor). The video with overlaid detection zones shall display each detector as white, when the state of the detector is ON, or as black, when the state of the detector is OFF. Each detector shall be selectively assignable to be visible or hidden in the detector flashing video display when the detector configuration file is programmed.

   Additional verification of detector operation includes visual observation of the LED's on the front of the TAP and/or confirmation of detection as recognized by the traffic controller.

I. Optimal Detection. The video detection system shall optimally detect vehicle passage and presence when the MVP sensor is mounted 30 ft. or higher above the roadway, when the image sensor is adjacent to the desired coverage area, and when the distance to the farthest detection zone locations are not greater than ten (10) times the mounting heights of the MVP. The recommended deployment geometry for optimal detection also requires that there be an unobstructed view of each traveled lane where detection is required. Although optimal detection may be obtained when the MVP is mounted directly above the traveled lanes, the MVP shall not be required to be directly over the roadway. The MVP shall be able to view either approaching or receding traffic or both in the same field of view. The preferred image sensor orientation shall be to view approaching traffic since there are high contrast features on vehicles as viewed from the front rather than the rear. The MVP sensor placed at a mounting height that minimizes vehicles image occlusion shall be able to monitor a maximum of six (6) to eight (8) traffic lanes simultaneously.

j. Terra Access Point Detector Port Master. The Terra Access Point card shall provide the hardware and software means for up to eight (8) MVP sensors to communicate real time detection states and alarms to a local traffic signal controller. It shall comply with the electrical and protocol specifications of the detector rack standards. The card shall have 1500 Vrms isolation between rack logic ground and street wiring.

   The Terra Access Point card shall be a simple interface card that plugs directly into a NEMA TS2 Type C or D detector rack. The TAP TS2 card shall provide 32 phase inputs and 64 detector outputs.

k. MVP Input and Output Assignments. Input and Output assignments are programmed into the MVP through the local "Supervisor" port on the detector rack interface card. The MVP declares which input and output pins are utilized during operation, the card requires no software

configuration or setup. Detector outputs shall be assigned to any detector type that changes on/off state and consecutive pairs of outputs shall emulate the output of two (closely spaced) detectors to report speed of individual vehicles.

l. Jumper Configurable TS1 I/O. Two jumpers shall permit the card to be configured so that all inputs and outputs go either to the rear edge connector or the front panel DB 15 connector.

m. Terra Interface Panel. The Terra communications interface panel supports one to Eight MVPs. The communications interface panel consists of a predefined wire termination block for MVP power, data, and video connections, a power transformer for the MVP, electrical surge protectors to isolate the TAP and MVP, and an interface connector to cable directly to the TAP.

n. MVP Sensor Power. The interface panel shall provide power for one (1) MVP through a step-down transformer, taking local line voltage and producing 28 VAC, 50/60 Hz, at about 30 watts. A 1/2 amp slow-blow fuse shall individually protect the step-down transformers.

o. High Energy Transient Suppression. The interface panel shall provide termination points for all street wiring of the MVP and high-energy transient protection. The interface panel shall provide high energy crowbar transient protection, to NEMA TS2 standards. The transient suppression shall protect all of the interconnected hardware.

p. Interface Panel I/O Terminations. The Terra interface panel terminal block includes terminations for one (1) to eight (8) MVPs. This shall include terminations for:

   3 termination points for Power, Communications and Video to and from the MVP sensor

q. Supervisor Software Suite. The system software shall support either small or large networks of field hardware of MVP sensors, TAPs, and commercial telecommunications equipment. The communication of traffic data, alarms, video snapshots, etc. across the network shall use the client server relationship model. The central communications server, the ComServer, provides local or remote access to all networked field hardware to a variety of client applications that can execute simultaneously on the same host computer as the ComServer or across a local area network. Local access shall provide direct hook-up/link to field hardware (for field installation and maintenance) even though the field hardware may be communicating to remote client applications. Remote access shall provide connection to specific field hardware over long distances as part of a larger interconnected network. The Supervisor Software Suite shall consist of the ComServer and all of the supplied client applications.

   The Supervisor Software Suite shall provide an easy to use graphical user interface and support all models/versions of the supplied MVP and Mini–Hub. The software shall support both still image and real-time

viewing of video images within in Windows. Programming the MVPs and designating inputs and outputs from/to the TAPs shall be performed with detectors overlaid on still images and monitoring the detection performance of the MVPs shall be displayed with "live" video.

The Supervisor Software Suite consists of the:

(1) ComServer, to provide the network communications services of deployed field hardware to client applications

(2) Network Browser, to activate selected client applications with associated field hardware in the network

(3) Detector Editor, to create and modify detector configurations to be executed on the MVPs and TAPs in the field

(4) Operation Log, to extract the MVP run-time operation log of special vents that have occurred

(5) Data Archive, to extract time interval cumulative traffic statistics in real time (on the same time interval spacing) or after long periods of data accumulation (for instance, once a day or once a week, etc.) and stored locally to the Supervisor PC

(6) Installer, to reconfigure one or more MVPs with a newer release of embedded system software.

r. Supervisor Computer System. A supervisor computer system is not required.

3. MVP Hardware

a. MVP Image Sensor. The MVP video detection system shall use medium resolution, color image sensor as the video source for real-time vehicle detection.

As a minimum, each image sensor shall provide the following capabilities:

(1) Images shall be produced with a color CCD sensing element with horizontal resolution of at least 500 lines and vertical resolution of at least 350 lines.

(2) Images shall be output as a video signal conforming to NTSC specifications.

(3) Provide software JPEG video compression.

(4) Useable video and resolvable features in the video image shall be produced when those features have luminance levels as high 10,000 lux during the day.

(5) Useable video and resolvable features in the video image shall be produced when the ratio of the luminance of the resolved features in any single video frame is 300:1.

(6) Provide direct real-time iris and shutter speed control.

(7) Be usable for video surveillance.

(8) An optical filter and appropriate electronic circuitry shall be included in the image sensor to suppress "blooming" effects at night.

(9) Gamma for the image sensor shall be preset at the factory to a value of 1.0.

b. MVP Optics. The MVP image sensor shall be equipped with an integrated zoom lens that can be changed using either configuration computer software or a hand-held controller.

c. MVP Enclosure. The image sensor and lens assembly shall be housed in an environmental enclosure that provides the following capabilities:

(1) The enclosure shall be waterproof and dust-tight to NEMA-4 specifications, and shall have the option to be pressurized with dry nitrogen to 5 ± 1 psi.

(2) The enclosure shall allow the MVP image sensor to operate satisfactorily over an ambient temperature range from –29° F to 140° F while exposed to precipitation as well as direct sunlight.

(3) The enclosure shall allow the image sensor horizon to be rotated during field installation.

(4) The enclosure shall include a provision at the rear of the enclosure for connection of the factory-fabricated power, communications, and video signal cable. Input power to the environmental enclosure shall be 110 VAC and either 50 or 60 Hz as an option.

(5) A heater shall be at the front of the enclosure to prevent the formation of ice and condensation in cold weather, as well as to assure proper operation of the lens' iris mechanism. The heater shall not interfere with the operation of the image sensor electronics, and it shall not cause interference with the video signal.

(6) The enclosure shall be light-colored and shall include a sun shield to minimize solar heating and glare.

(7) The front edge of the sunshield shall protrude beyond the front edge of the environmental enclosure and shall include provision to divert water flow to the sides of the sunshield.

(8) The amount of overhang of the sunshield shall be adjustable to prevent direct sunlight from entering the lens or hitting the faceplate.

(9) The total weight of the image sensor in the environmental enclosure with sunshield shall be less than 6 pounds.

(10) When operating in the environmental enclosure with the power, communication and video signal cable connected, the image sensor shall meet FCC class B and CE requirement for electromagnetic interference emissions.

d. MVP Electrical. Connections for video, communications and power shall be made to the image sensor using a single connector (Easy Lock). The Contractor shall supply the 3 conductor (1175-006) 18 AWG Carolprene flexible cable, which will run from the back of the camera to the signal controller cabinet.

e. MVP Field Interface Equipment. An MVP communication interface panel shall be available for installation inside the traffic cabinet. The panel shall provide twisted-pair connection points with approved transient protection. Transient protection shall be included for each MVP image sensor. Additionally, the communication interface panel shall provide 110 VAC for each sensor using transformers that step down the voltage from the existing 110 or higher AC power available in the cabinet. The interface panel 3-wire input power shall be connected to the transient protected side of the AC power distribution system in the traffic control cabinet in which the panel is installed.

4. System Installation. The supplier of the video detection system shall supervise the installation and testing of the video detection system and computer equipment. A factory certified representative from the supplier shall be on-site during installation. Install all video detection equipment in accordance with the manufacturer's recommendations.

5. System Training. Provide a four-hour session of training by a certified instructor to State personnel in the operation, setup and maintenance of the video detection system. Provide instruction and materials for a maximum of 10 persons and conduct the training at a location determined by the Engineer.

6. Warranty, Service, and Support. The supplier, for a minimum of two (2) years, shall warrant the video detection system. Ongoing software support by the supplier shall include software updates of the MVP sensor, Terra Access Point and supervisor computer applications. These updates shall be provided free of charge during the warranty period. The supplier shall maintain a program for technical support and software updates following expiration of the warranty period. This program shall be available to the State in the form of a separate Contract.

Article 17.5 Controller Cabinet

Contractor shall provide a controller cabinet that meets the requirements of NEMA Standard TS 2-2003 V02.06 Traffic Controller Assemblies with NTCIP Requirements (NEMA TS-2), Section 5 Terminals and Facilities and Section 7 Cabinets. Cabinet enclosure shall be UL listed.

A. Standard Features. Supply the following standard features:

1. Materials

   Unless otherwise designated in the Plans, provide cabinets constructed of sheet Aluminum. Back and sides of cabinet shell shall be of one continuous piece of Aluminum.

2. Cabinet Dimensions

   Unless otherwise designated in the Plans, provide a size 6 cabinet as defined in NEMA TS-2 Table 7-1.

3. Doors

a. The cabinet shall be equipped with a universal lock bracket capable of accepting a Best CX series lock. The cabinet shall come equipped with a Best blue construction core lock. Provide two keys for lock.(2)

b. Provide a Police Compartment meeting the requirements of NEMA TS-2 Section 7.5.7. Provide two keys for lock. The Police Compartment shall house the following switches:

   (1) "flash/automatic" switches that when placed in the "flash" position causes the intersection displays to go into the flashing mode. When placed in the "automatic" position, the signal system must resume normal operation.

   (2) "signals on/off" switch that when placed in the "off" position removes power from the signal bus. Do not allow power on the bus when either "automatic" or "flash" operation is selected by any means.

c. Permanently label switches in the Police Compartment.

d. The door shall be mounted with a single continuous stainless steel piano hinge that runs the length of the door. Attaching tamper resistant bolts shall also be stainless steel.

e. Provide Generator Bypass Compartment

   (1) The cabinet front door shall have a locking generator bypass compartment that shall be used to connect a generator to operate the cabinet during extended loss of service line power. The generator compartment shall be capable of being closed and locked while a generator is connected. The mechanism for allowing generator cable access, while the compartment is closed, shall be an integral part of the generator bypass door, via a sliding panel that will normally be in the closed position. Inside the compartment there shall be a silkscreened panel housing a Hubbell HBL2615 30A / 125V flanged inlet receptacle capable of accepting a standard generator plug, a BACO HC52DQG cam switch with split AC+ feeds, and (2) LED lamps with sockets. One LED shall be illuminated when the cabinet has service line power and the other when the cabinet is under generator control. All LED's shall be field replaceable without putting the intersection in flash and shall carry a 5 year manufacturer warranty.

   (2) All wiring to the generator bypass compartment shall be contained in a single cable bundle. The cable shall connect to the backside of the electrical components and shall only be accessible from the inside of the cabinet front door. All electrical components on the inside of the front door that carry AC voltage shall be covered by a see-through plexi-glass cover. The generator bypass cable shall terminate at the same power panel location as service line voltage.

   (3) The generator bypass receptacle compartment shall come with a tapered lock using a Best CX series blue core.

(4) The welds for the generator receptacle compartment shall be done on the inside of the front door. All welds shall be free from burrs, cracks, blowholes or other irregularities.

4. Shelves

Provide shelves meeting the requirements of NEMA TS-2 Section 7.6. Cabinet shall come with (2) double beveled shelves 10” deep that are reinforced welded with V channel, fabricated from 5052-H32 0.125-inch thick aluminum with double flanged edges rolled front to back. Slotted hole shall be inserted every 7” for the purpose of tying off wire bundles. Provide additional laptop computer shelf mounted approximately 42" above ground level. The laptop shelf must accommodate a standard 17" computer, be retractable below one of the cabinets’ shelves and contain a storage drawer.

5. Finish and Preparation

The cabinet shall be powder-coated grey on the outside and white on the inside. All exterior seams shall be manufactured with a neatly formed continuously weld construction. The weld for the police box door shall be done on the inside of the cabinet door. All welds shall be free from burrs, cracks, blowholes or other irregularities.

6. Cabinet Mounting

a. Provide cabinet mounting features as defined NEMA TS-2 Section 7.8.

b. The cabinet manufacturer is responsible for providing a cabinet that will mount without modification on the foundation detailed in Municipality of Anchorage Standard Specifications, Sections 80-5, 80-6, and 80-7.

c. The cabinet shall come with lifting ears affixed to the upper exterior of the cabinet. These ears shall utilize only one bolt for easy reorientation.

7. Cabinet Ventilation

Furnish a cabinet that fully meets the requirements of NEMA TS-2 Section 7.9 and the following:

a. Furnish the fan and cabinet vent with internally mounted metal covers that are fabricated to close off the flow of air during winter operation.

b. Equip the cabinet with a selectable, 600/900/1500 watt cabinet heating device with a 2 speed fan. The heating device must have a remote air sensing thermostat. The contacts must be rated 20 amps, 120 volts, 60 hertz. Heating device shall be mounted on inside of the cabinet door, below the control panel. Heating device shall be a Caframo model 9206CA-BBX or approved equivalent.

(1) Construct the thermostat so that contacts close on descending temperature and are adjustable between -30 and 110 °F ±5 °F. The contacts must open on rising temperatures of 15 °F above the closing temperature. The adjustment must have an indicating pointer. Remote bulb type thermostat shall not be used. Thermostat

shall be a Johnson Controls model A19BBC-2C or approved equivalent.

(2) Connect the thermostat in series with an electrical resistance heater and blower fan. The blower fan must be rated for continuous duty. The heater and fan must be connected in parallel and rated 120 volts, 60 Hertz. Mount the unit on the cabinet door below the auxiliary panel.

(3) Do not block the air intake or outlet. Provide the unit with a SPST manual override switch that bypasses the thermostat to enable the fan and heater to operate at warmer temperatures.

8. Auxiliary Cabinet Equipment

a. Light fixture. The cabinet light fixture shall be an incandescent type porcelain lamp holder rated for 660W-250V AC/CA. The lamp shall be 100W. The lighting fixture “ON-OFF” switch must be a toggle switch mounted on the on the inside control panel. Include in the circuit a door actuated switch that turns the light ON when the door is open and OFF when the door is closed.

b. Provide a re-sealable print pouch. The pouch shall be mounted to the door of the cabinet. The pouch shall be of sufficient size to accommodate one complete set of cabinet prints.

c. Provide three (3) paper sets of complete and accurate cabinet drawings with each cabinet. Make cabinet drawings available electronically in AutoCAD v2006 or later format and deliver with paper set.

d. Provide one paper set of manuals for the controller, Malfunction Management Unit, GTT Opticom Phase Selector and vehicle detector amplifiers with each cabinet. Make said manuals available in electronic Adobe "pdf" format and deliver with paper set.

9. Cabinet Wiring

Neatly arrange the wiring within controller cabinets to conform to the requirements of Section 80-10, 80-11 and 80-13. Furnish controller cabinets wired to accommodate:

a. Configuration #4 in Table 5-2 of the NEMA Standards Publications No. TS 2-2003 V02.06, Traffic Controller Assemblies with NTCIP requirements with four each Type 2 detector racks.

(1) Equip the cabinet with required control and auxiliary equipment connecting cables to operate the phases and detection indicated on the Plans, including future use with a minimum of 16 load switch positions, 8 flash transfer relay position and 1 flasher socket.

(2) Size wiring, switches, surge protectors, flash relays, and flashers to handle the necessary amperage required under full cabinet use. Use orange colored wires to run from the flash transfer relay used for emergency flash programming.

(3) Wire the cabinet to accommodate 6 unique preemption sequences as defined by NEMA TS-2 Section 3.7 and 2 auxiliary preempt sequences. Configure two detector racks to accommodate 4 unique sequences.

(4) Wire the cabinet with a GTT Company's Opticom Priority Control Model 768 Auxiliary Interface Panel and a Model 757 Auxiliary Harness to accommodate the full quantity of emergency preemption inputs and green sense operations available with GTT Company's Opticom Priority Control System 764 series phase selector.

Install Opticom panels in close proximity to one another.

(5) Wire the cabinet so that the control panel's momentary contact test switches for vehicle calls Phase 1-8 are wired to Detector rack Channels 1-8 respectively.

(6) Wire the cabinet so that each inductive loop detector channel input termination has three adjacent screw terminal positions provide, so that two loops can be series terminated for each individual detector channel.

(7) Wire the cabinet so that there is a single field terminal wired to each of the cabinet's flasher outputs circuits #1 and #2.

(8) Wire the cabinet so that channel 1-16 green field outputs are jumpered to a terminal block. Also, route the GTT Opticom phase selector green sense wires to the same terminal block.

(9) Wire cabinet so that there are terminal block locations (test points) for all T&F BIU's #1 & #2 wiring circuits.

(10) Provide a load resistor panel with 8 resistors for usage to "load" future circuits for Flashing Yellow Arrow (FYA) operation.

(11) Wire all preemption outputs from the detector racks to a terminal block. Wire BIU wires for preemption inputs to adjacent positions on same terminal block. Intended for wiring programming of alternative assignment (Preempt 2-5 or Preempt 3-6). For emergency vehicle preemption.

(12) Wire the cabinet so that confirmation lights are activated via controllers Preempt Active Outputs, not phase selector confirmation light outputs.

Wire the cabinet so that preemption confirmation light circuits utilize the yellow outputs of LS9 – LS12.

Wire all BIU preemption outputs wires to a terminal block. Wire conductors for LS9 – LS12 yellow inputs to a terminal block intended for wiring programming of alternative confirmation light assignments.

(13) Terminate the MMU wires associated with channel # 9–12 yellow outputs on a terminal block, for future use. Install conductors from channel # 9–12 yellow field terminals to position adjacent to relocated MMU wires.

(14) All wires terminated behind the main panel or on the back side of other panels shall be SOLDERED. No pressure or solder-less connectors shall be used.

(15) All cabinets shall be wired to flash for all channels. Flashing operation shall alternate between channels 1,3,5,7,13,14,15,16 and 2,4,6,8,9,10,11,12. Flash programming shall be either red or yellow simply by changing wires on the front of the load-bay.

10. Field Terminal Blocks

Provide Terminals and Facilities meeting the requirements of NEMA TS-2 Section 5, Configuration #4 (Table 5-2) and the following:

a. Provide 2 or more insulated terminal blocks to terminate field conductors. Provide each block with 12 poles with 10-32 screw type terminals. Use a terminal block that is a barrier type with removable shorting bars in each of the 12 positions and with integral type marking strips. Terminate conductors to a terminal block. The load-bay shall have two rows of field terminals tied together in series. Each channel shall have 6 terminals, two complete rows each consisting of 3 terminations from left to right beginning with phase 1 corresponding to the appropriate vehicle phase Green, Yellow and Red and following the order of the load switches. Connections shall be soldered on the back sides of the terminal blocks. Field terminals shall be #10 screw terminal and be rated for 600V.

b. Terminate conductors from the controller unit and MMU unit in ring type terminal lugs or solder them to a through panel solder lug on the rear side of the terminal. Terminate other conductors in spade type terminal lugs.

c. Do not bring more than 3 conductors to any one terminal. Two flat metal jumpers, straight or U shaped, may also be placed under a terminal screw. Fully engage at least 2 full threads of terminal screws when the screw is tightened. Do not extend live parts beyond the barrier.

d. A TII Porta Systems Model No. 1512 building entrance protector 12-pair unit shall be installed for telemetry cable pair terminations. A 3M 2810-HCO/87-DPM cross connect terminal block with pigtails and a 3M 80-6113-3163-0 frame shall also be installed. The building entrance protector unit and the cross connect terminal block with frame will be mounted on a common panel on the right side of the controller cabinet.

e. On the right side of controller cabinets, install two 16 position bus bars, for terminating the equipment grounding and neutral conductors used inside the cabinets. On the left side of the controller cabinets, install two 32 position bus bars, for terminating the equipment grounding and neutral conductors from field wiring. Offset upper 16 position bus bar past the lower 16 position bus bar where 32 positions are required.

11. Cabinet Accessories

See NEMA Standard TS 2-2003 V02.06, Section 5 Terminals and Facilities, Figure 5-4 Cabinet Power Distribution Schematic for Items “a.” through “f.”

a. Disconnecting Means

(1) Main circuit breaker must be a single pole, 40 ampere, 10,000 amperes interrupting capacity for each cabinet.

(2) Provide a minimum of 2 Auxiliary circuit breakers, each must be single pole, 20 ampere, 10,000 amperes interrupting capacity to protect fan, heater, light, and convenience outlet(s). One auxiliary circuit breaker shall only service a single outlet receptacle for exclusive use for the cabinet heater. The rating of the main disconnect means with overcurrent protection must be not less than 125% of the maximum anticipated continuous load. When using disconnecting circuit breakers, use "trip indicating trip free," Type.

b. Signal Bus. Connect the signal bus to the incoming AC line through a signal bus solid state relay and an overcurrent protection device. Energize the signal bus solid state relay to provide power to the signal bus. The current rating of the signal bus solid state relay must be at least the current rating of the main overcurrent protection device. Solid state relay shall have an LED input status indicator.

c. AC Service Transient Suppression. Connect the transient suppression device for the primary feed of the cabinet on the load side of the cabinet overcurrent protection device. The transient voltage suppression device connected to the controller power circuit must provide protection against voltage abnormalities of 1 cycle or less duration.

(1) The suppressor must be solid state high energy circuit containing no spark gap, gas tube, or crow bar component. The current rating of the device must be 15 amps minimum. The device must provide transient protection between neutral and ground, line and ground, as well as line and neutral. If the protection circuits fail, they must fail to an open circuit condition. The device must meet requirements of UL Standard 1449.

(2) The suppressed voltage rating must be 600 volts or less when subject to an impulse of 6,000 volt, 3,000 amp source impedance, 8.0/20 microsecond waveform as described in UL Standard 1449. In addition, the device must withstand, without failure or permanent damage, one full cycle at 264 volts RMS.

(3) The device must contain circuitry to prevent self induced regenerative ringing. There must be a failure warning indicator light that must illuminate when the device has failed and is no longer operable. The transient suppression device must withstand a 20,000 ampere surge current with an 8x20 microsecond (time to crest x time to second halfcrest) waveform 20 times at 3 minute intervals between surges without damage or degradation to the suppressor. Output voltage must not exceed 500 volts at any time

during the test. Use a device that is a solid state, high energy circuit with no spark gap, gas tube, or bar component.

d. Radio Interference Suppression. Equip each traffic cabinet, flasher, and other current interrupting device with a suitable radio interference suppressor installed at the input power point. Install the radio interference suppressor after the AC service transient suppression unit described in Article 17.5 A 11.c. It must provide a minimum attenuation of 50 decibels over a frequency range from 200 kilohertz to 75 megahertz, when used with normal installations.

(1) The interference suppressor must be hermetically sealed in a substantial metal case filled with suitable insulating compound. Terminals must be nickel-plated, 10-24 brass studs of sufficient external length to provide space for connecting two No. 8 conductors and must be so mounted that the terminals cannot be turned in the case. Ungrounded terminals must be properly insulated from each other and must maintain a surface leakage distance of not less than 1/4 inch between any exposed current conductor and any other metallic part, with an insulation factor of 100 to 200 megohms dependent on external circuit conditions.

(2) The radio interference suppressor must have a minimum current rating equal to the rating of the main disconnect means as specified in Article 17.5 A 11.a (1). It must be designed for operation on 120 volts, 60 hertz, single phase circuits and be UL and EIA compliant.

(3) Connect the ground connection of the radio interference suppressor only to AC neutral. Do not connect to Earth Ground directly.

e. Communications Transient Suppression. Provide eight (8) hybrid (solid state/gas tube) 5-pin protector modules. Modules shall have gold pins and a black case. The module shall be a Bourns part No. 2410-3-1-G-MSP-ST or approved equal.

f. Control Panel. Provide and label a control panel assembly that is readily accessible from the front of the cabinet. The control panel assembly must consist of:

(1) "controller power" switch to energize the controller while the signal lights are off or are being operated by the flasher. Label and rate the switch for load current.

(2) “cabinet light” “ON-OFF” switch.

(3) "auto/flash" switch that when placed in the "flash" position provides flashing operation without interrupting the controller unit power. When the switch is placed in the "auto" position the controller unit must provide normal operation.

(4) "stop time/off/on" switch that when placed in the "ON" position causes the controller unit to stop time. In the "off" position, the controller unit must be active regardless of external commands. In

the "AUTO" position, the timing must be normal but subject to external command interruptions.

(5) "heater by-pass" switch to bypass the remote heater thermostat.

(6) momentary contact test switches to place calls on each vehicle and pedestrian phase. Switches must provide tactile feedback and be rated at 1 ampere, minimum, for a resistive load at 120 VAC and at 28 VDC. Contacts must be coin silver or gold plated and be enclosed and labeled as to their function.

(7) Provide a hinged clear plastic cover over the control panel switches. Plastic cover shall be of a minimum thickness of 0.1”

(8) Control Panel shall be attached to door with a hinge located along bottom edge, to allow panel to be lowered for testing or replacement of switches.

g. Receptacle Outlets. The cabinet shall be wired with one duplex outlet with a ground fault interrupter, one convenience duplex outlet without ground fault interrupters and one single outlet, exclusively for the heating device without ground fault interrupter. The ground fault outlet shall be mounted on the right side of the cabinet on or near the power panel. The one convenience outlet shall be near the top shelf. The heater outlet shall be mounted on the right side of the cabinet on or near the power panel. No outlets shall be mounted on the door. The GFI power shall be fed through the auxiliary breaker. The convenience outlet power shall be fed through an EDCO SHP300-10 transient voltage suppressor located on the cabinet power panel.

h. Power panel cover. Clear plastic cover material shall be a minimum thickness of 0.1”. Cover shall be firmly attached at four points. Holes shall be slotted for easy removal and replacement.

i. Labeling on the Control Panel and Load Bay shall be silk screened on front and back sides. Labeling on Power Panel shall be silk screened.

j. The entire load bay shall roll down and provide access to all of the back of panel wiring. All solder terminals shall be accessible when the load-bay is rolled down. The assembly shall be able to roll down without requiring other components, cables or load switches to be removed The load-bay shall be balanced such that it will not roll down when fully loaded with load switches, flashers and flash transfer relays, when retaining attachments are removed.

B. Special Features. Provide the following.

1. Coordination "Remote/Time of Day/Free" Switch. When the switch is in the switch is in the "Time of Day" position, the local controller must use the local coordinators time of day plan. When the switch is in the "Free" position, it must be possible to remove any or all coordination devices and maintain normal, non-coordinated controller operation without wire jumpers, jumper plugs or other special devices.

2. “Force-Off” Switch There shall be 2 momentary test switches tied to ring 1 and ring 2 on the controller. Switches must provide tactile feedback and be rated at 1 ampere, minimum, for a resistive load at 120 VAC and at 28 VDC. Contacts must be coin silver or gold plated and be enclosed and labeled as to their function.

Provide a clear plastic cover mounted on top of the detector racks. Clear plastic cover material shall be a minimum thickness of 0.1” Cover to extend over harness connectors and wiring on card slots.

Article 17.6 Operation

A. The cabinet shall be wired for all red flash operation.

B. The flashing circuit shall be independent on the controller unit and shall remain in operation upon shutdown of the controller or removal of the controller from the cabinet.

C. The controller cabinet shall be wired so that removal of the MMU shall cause the intersection to go into flashing operation.

D. The method by which flashing operation is accomplished shall be determined via program entry and shall be either:

1. Voltage Monitor Output inactive, or
2. Load Switch Driver Output Flashing - Load Switch Driver Output Flashing shall provide an alternating True/False logic output at 1 pulse per second repetition rate with 50 ± 2 percent duty cycle. The selection, via program entry, of Yellow Flashing, Red Flashing, or Dark for each vehicle load switch driver group (G/Y/R) shall be provided. All pedestrian load switch driver groups (W/PC/D) shall be inactive (Dark) in flash.

E. Pedestrian push buttons shall be operated at 12 VAC.

F. Controller Priorities. The drives, controls and equipment shall have priorities and each device, control or item of equipment shall override the operation of those items listed below it:

1. Power-Up
2. External Start
3. Preemption
4. Internal Advance
5. Stop Time
6. Automatic Flash
7. Manual Control Enable
8. Force Off

G. Signal Timing Priorities. Patterns and signal plans are capable of being selected on program entry, Interconnect Inputs, Time Base Control events, and a System Interface. The pattern and signal plan select priority shall be as follows:

1. Program Entry
2. System Interface
3. Time Base Control Event
4. Interconnect Inputs

   When Time Base Control On-Line is active, the Time Base Control event priority will be lower than the Interconnect Inputs. Should the Sync Monitor diagnostic determine the Interconnect Offset to be invalid, a Time Base Control event may control.

Article 17.7 Shop Tests

Traffic controller cabinet, cabinet wiring diagrams, controller units, and auxiliary equipment shall be shipped to the Traffic Signal Electronics Lab at 3601 Dr Martin Luther King Jr. Avenue. The Traffic Signal Electronics personnel will inspect cabinet wiring, burn in signal cabinet equipment, customize cabinets(s) for desired operation and test in accordance with the following specifications.

The Contractor shall allow six (6) weeks to allow for shop testing. All required equipment including wiring diagrams shall arrive in one shipment. Partial shipments will not be accepted and will be returned to the vendor.

Traffic signal equipment shall meet the operational and functional requirements of the Drawings and Specifications when tested in accordance with NEMA Standards Publication Number TS2-2003 V2.06, Traffic Controller Assemblies.

If a partial failure occurs at any step in the test - physical, environmental, or operational - the manufacturer representative will be permitted to make on-the-site repairs within ten (10) days after notification of the malfunction. The test will then be restarted at beginning of category in which malfunction occurred. Failure to make repairs in ten (10) days after notification will result in rejection.

If equipment malfunctions twice in the same category, the equipment will be rejected. When equipment is rejected, the entire package, including cabinet, will be returned freight collect to the vendor. New equipment, with a different serial number, must then be submitted for testing. Rejected equipment shall not be used on signal projects within the Municipality.

Testing subsequent to rejection of the equipment for failure to comply with specification requirements will be at the expense of the Contractor. Deductions to cover the costs of such testing will be made from any monies due or which may come due the Contractor under this Contract.

A failure shall be defined as any occurrence which results in other than normal operation of the equipment. The equipment is considered to have failed if any of the following occur:

1. The controller unit malfunctions.
2. The load switch produces incorrect signal indications.
3. The MMU fails to satisfy the requirements of the Contract Specifications.

4. The detector racks or emergency preemption interface fail to operate correctly.
5. A BIU fails to operate correctly.

After satisfactory completion of the shop test, the Contractor will be notified to pick up the tested and marked equipment at the test site. The Contractor shall pick up successfully tested equipment within two (2) weeks of notification. The Contractor shall deliver said equipment to the Work site. Successful completion of the test does not relieve the Contractor of equipment warranty obligations as specified in Section 80.01, Article 1.4 – Warranties, Guarantees, and Instruction Sheets, or field testing as specified in Section 80.16, Article 16.2 – Field Tests.

Copies of the shop test results will be sent to the Contractor and associated vendor.

Article 17.8 Installation

A. Cabinet positioning shall be subject to the review and acceptance of the Traffic Signal Electronics Foreman.

B. A three eighths inch (3/8”) fillet of silicone caulking shall be placed between each controller cabinet and the concrete slab foundation to prevent dust and dirt from entering the cabinet.

Article 17.9 Measurement

Traffic signal controllers will be measured as units, complete and in place, including labor, cabinet, hardware, controller unit, standard and auxiliary equipment, all as required by this Section and by the Contract Drawings Special Provisions to provide a complete and working system.

Article 17.10 Basis of Payment

Payment for this Work shall be in accordance with Division 10, Section 10.07 - Measurement and Payment, and shall include full payment for all Work described in this Section.

Payment will be made under the following units:

ITEM	UNIT
TS2-1 Controller Unit	Each

SECTION 80.18 VEHICLE DETECTORS

Article 18.1 Loop Detectors

For the purpose of this Section, the "home run" and the "home run loop wires" are defined as the pair of wires from the loop in the traveled lane to the nearest junction box. The "lead-in" or "lead-in cable" is defined as the shielded twisted pair cable from the junction box to the controller cabinet.

All connections between the loop wire and shielded lead-in cable shall be made as follows:

A. Shielded lead-in cable pairs shall not be cut except when they are to be spliced to a loop and then only at the junction box where the splice shall be made. Used and unused ends of the cut pairs should be of equal length.

B. Place tubular heat shrink insulation over the foil and drain wire on all cut ends of the shielded lead-in cable pairs to insure drain wire and conductive side of foil are insulated from all other foils and drain wires.

C. Insert the wires into the appropriate sized end of the Multilink part # ML56-16, or approved equal, splice connector. Crimp and heat the connector in accordance with manufacturer's installation instructions.

D. Secure cable/conductor bundle with nylon cable ties.

E. Seal the connection in a splice kit as shown on the detail. All cable and conductor sheaths shall extend a minimum of one inch (1") into re-enterable encapsulating compound. A half inch (1/2") of free space, measured from the outside dimensions of the splice cables/conductors to the inside dimensions of the splice tube kit, shall be left around the circumference and at the ends of all splice cables/conductors. Free space shall be completely filled with approved re-enterable encapsulating compound so that there is no space for water to sit inside of splice kit when kit is stood up vertically.

The Contractor shall conduct a megohm meter test at five hundred (500) volts DC on all loops. The ends of the loops shall be temporarily spliced together and the resistance to ground measured. The resistance shall not be less than one hundred (100) megohm. If the resistance is less than one hundred (100) megohm, the Contractor shall be responsible for correcting the problem(s), and the test shall be repeated until passed. The test shall be performed at the time of the pre-final inspection or when the signal is put into operation, whichever comes first; however, the Contractor is encouraged to test the loops to his own satisfaction prior to inspection.

The DC resistance between two (2) ends of the same loop wire shall be measured and shall not exceed one and one-half (1.5) ohms per one hundred (100) circuit feet. Where existing lead-in cable is being used, the Contractor shall perform the above tests on the lead-in cable prior to splicing with the loop wires. If the tests on the existing lead-in cable are not satisfactory, the Engineer may request that it be replaced at an appropriate negotiated price.

All the above tests are to be performed, and the results recorded, by the Contractor in the presence of the Engineer. The Contractor shall supply all the test equipment and deliver signed legible copies of the test reports to the Engineer.

Conduit-encased loop wires shall be No. 14 AWG stranded copper wire with PVC tube (IMSA Spec. 51-5).

Each detector loop shall be connected to its own detector lead-in pair of seven (7) pair #18 shielded conductor cable to be used for detector lead-ins. All parallel and series connections shall be made at the cabinet terminal strip.

The upstream and intermediate loop home runs shall be routed to the nearest junction box along a path perpendicular to the direction of travel. Home runs for adjacent loops less than sixteen feet (16') apart shall be routed to the nearest junction box in the same trench to the extent possible to minimize excavation of the pavement.

The stop bar loop home runs will generally be routed to the same junction box. All the home runs shall be routed parallel and adjacent to each other along a path perpendicular to the direction of travel. A path parallel to the direction of travel may be needed from the individual loop to the common perpendicular routing.

Loop locations may be staggered plus or minus six inches (±6") to accommodate home run placement.

The loop conduit shall be PVC Schedule 80, conforming to ASTM D1785, except that the "X" connection of the loop to the home run shall be a hot dip galvanized steel conduit. The Contractor shall use one inch (1") diameter conduit.

The home run conduit shall be PVC Schedule 80.

For installation of loops, loops will be placed in compacted leveling course bedding material conforming to Division 20, Section 20.22 – Leveling Course. There shall be a minimum thickness of one inch (1") of leveling course beneath the loop conduit and condulet. A minimum of one inch (1") of compacted leveling course shall be placed on top of the loop conduit and condulet prior to paving.

Sand bedding shall be non-frost-susceptible, consisting of naturally occurring fine mineral aggregates free of clays, silt, or organic matter.

In constructing conduit encased detector loops, the Contractor shall be responsible for devising his own methods of cutting and restoring the existing asphalt concrete pavement, provided that his methods:

A. Allow for the maintenance of traffic through the construction zone, and;

B. When installing loop detectors in existing pavement, cut the asphalt with a saw and remove all asphalt within the saw cut, and;

C. Replace asphalt concrete in two (2) equal lifts, with a minimum thickness of three inches (3") or the existing pavement thickness, whichever is greater, and;

D. Reconstruct the base material, including new leveling course and disposal of surplus or unusable material, if necessary, and asphalt concrete, in accordance with Division 20 - Earthwork and Division 40 - Asphalt Surfacing, and;

E. Are approved by the Engineer.

Full-lane-width asphalt patching is required. Any remaining section less than twelve feet (12') between loops must be replaced to provide a continuous patch. The Contractor shall adhere to the following guidelines:

A. Where existing pavement will not be overlaid, enclose all loops that enter a common junction box within a trapezoidal saw-cut.

B. Cut to within one foot (1') of the lane and edge lines, preserving the pavement markings.

C. Remove the asphalt to the lip of the gutter when there are no edge lines.

D. Cut across lane lines when loops in adjacent lanes are side by side.

E. Cut trenches a minimum of three feet (3') wide installing loop tails across a lane.

F. Trenches crossing a shoulder only may be a minimum of one foot (1') wide.

G. Contractor shall saw-cut asphaltic concrete pavement for loops in existing pavement.

H. All existing pavement between detection loops within twelve feet (12') of another loop shall be saw-cut and removed, then repaved continuously.

I. All traffic markings removed as a result of loop installation in existing pavement shall be replaced to the original alignment and messages.

After the asphalt concrete pavement has been removed according to the Contractor's approved method, the area where the conduit-encased detector loop is to be placed shall be cleared of all rocks and protrusions which may damage the conduit. Sand bedding or leveling course may be required by the Engineer to attain an adequate surface. The Contractor shall take care that the subgrade is not disturbed. If the subgrade material is disturbed, the Contractor shall compact the surface to the satisfaction of the Engineer.

The conduit-encased detector loop shall then be installed and sand bedding or leveling course shall be placed over the loop to a minimum of one inch (1") compacted depth.

An asphalt tack coat per Division 40, Section 40.04 – Tack Coat, shall be applied to all edges of the existing pavement prior to placing new asphalt. Asphalt concrete pavement shall be placed and compacted in a minimum of two (2) equal lifts per Division 40 – Asphalt Surfacing.

When loops are installed in existing pavement or as new Work, traffic shall not be allowed to drive over the loops until the first layer of asphalt has been placed.

Article 18.2 Optical Detectors - Preemption

Any substitutions of cable, material or equipment in this Article must be submitted to the Municipal Traffic Engineer for testing and approval prior to installation.

Mount detectors according to manufacturer recommendations or as approved by the Engineer. Mount and aim detectors to provide maximum emergency vehicle recognition. Detector locations shown on the Drawings are approximate. Before installing the Optical Detectors, gain approval of their final lateral location on the mast arms from the Municipal Traffic Engineer or assigned designee.

Install the following components of the GTT Company's Opticom Priority Control System in accordance with manufacturer's written installation instructions at each signalized intersection listed on the Drawings:

A. Install the quantity of Model 711, 721, or 722 Optical Detectors on the traffic signal pole mast arms as shown on the Drawings. Mounting hardware shall consist of Pelco Products, Inc. "Astro Mini-Brac" Band Mount Clamp Kits, or approved equal, and GTT Company "M575 Confirmation Light Hardware" Installation Kit, or approved equal. See the Drawings for installation details.

B. Install Model 138 Optical Detector cable and a three-conductor #14 AWG signal cable between each optical detector and the controller cabinet. Furnish enough slack in these cables to extend two feet (2') beyond the end of each signal mast arm and to leave ten feet (10') of slack in the controller cabinet. Label each cable.

C. Before attaching the conductors to the optical detector, strip the insulation from the conductors in the Model 138 cable and attach all four (4) conductors to chassis ground in the controller cabinet. Attach the signal cable to the confirmation light. The Traffic Signal Electronics Shop will make final terminations of the conductors in the controller cabinet.

D. When retrofitting existing controller cabinets, furnish each controller assembly with two (2) Model 764 phase selectors and Model 768 Auxiliary Interface Panels. Deliver these parts to the Traffic Signal Electronics Shop Foreman.

New controller cabinets shall include these parts installed by the controller assembly manufacturer per Section 80.17, Article 17.4 - Special Auxiliary Equipment.

Article 18.3 Radar Detectors

Radar detectors may not be used without prior approval of the Traffic Engineer. Any substitutions of cable, material or equipment in this Article must be submitted to the Traffic Engineer for testing and approval prior to installation.

Radar detectors shall be Microwave Sensors Model TC26B sensors that operate in the X-band radar frequency and use microprocessor analyzed Doppler-microwave detection method for detecting vehicles moving toward or away from the unit. They shall be installed in accordance with the manufacturers written installation instructions and the following requirements:

A. Install a sixty-hertz (60 hz) transformer with one hundred twenty (120) volt AC primary and twenty four (24) volt AC secondary in the controller cabinet. Follow the manufacturer's requirements for current output per detector. Furnish a UL-listed, Class 2 rated transformer with built-in overload and short circuit protection.

B. A fuse block shall be provided with four (4) fuses to protect the twenty-four (24) volt AC transformer secondary and isolation relay from damage due to faults outside of the controller cabinet assembly.

C. Home-Run Cable

Wire each sensor using a color-coded three (3) pair cable such as Alpha Wire Company cable part # 6314 or Beldon part # 9883, or approved equal.

Pair 1 shall be black paired with red and shall be used to supply power to the unit.

Pair 2 shall be black paired with white and shall be tied back at both ends.

Pair 3 shall be black paired with green and shall connect to the relay contacts in the unit. In the cabinet, this pair shall be connected to the twenty-four (24) volt AC transformer secondary and the isolation relay.

D. Isolation Relay

For each detector, a socket-mounted isolation relay shall be provided for the controller cabinet assembly. The relay shall be an RH1B-UAC24V with snap mount socket and aluminum din rail. One leg of the relay coil shall connect to the twenty-four (24) volt AC transformer secondary while the other leg shall be fused and connect to the detector unit relay.

Article 18.4 Ultrasonic Detectors - Ultrasonic Presence Sensors

Ultrasonic detectors may not be used without prior approval of the Traffic Engineer. Any substitutions of cable, material or equipment in this Article must be submitted to the Traffic Engineer for testing and approval prior to installation.

Ultrasonic detectors shall be Microwave Sensors Model TC30C. They shall be installed in accordance with the manufacturer's written installation instructions.

At the locations shown on the Drawings, install sensors that operate at an ultrasonic frequency and sample for the presence of stationary and moving vehicles at a rate of ten (10) times per second. Furnish sensor units that:

A. Feature solid-state circuitry and a high-speed transducer with the sensitivity to detect a motorcycle. The cone of coverage produced by the transducer should measure at least four feet (4') in diameter at twenty one feet (21') from the transducer. The unit shall provide a continuous call to the controller unit with the presence of a vehicle in its cone of coverage or whenever the unit loses power.

B. Include an external control to adjust the length of the cone of coverage, an external detection light emitting diode, and mounting brackets suitable to install the units on traffic signal pole mast arms.

C. Require no external amplifiers, seasonal tuning, or special cabling, and which operate at all temperatures from -31°F to 167°F (-35°C to 75°C).

D. Operate on a voltage of twelve (12) to twenty-four (24) volts AC.

E. Install a sixty-hertz (60 hz) transformer with one hundred twenty (120) volt AC primary and twenty-four (24) volt AC secondary in the controller cabinet. Follow the manufacturer requirements for current output per detector. Furnish a UL-listed, Class 2 rated, transformer with built in overload and short circuit protection.

F. A fuse block shall be provided with four (4) fuses to protect the twenty-four (24) volt AC transformer secondary and isolation relay from damage due to faults outside of the controller cabinet assembly.

G. Home-Run Cable

Wire each sensor using a color coded three (3) pair cable such as Alpha Wire Company cable part # 6314 or Beldon part # 9883, or approved equal.

Pair 1 shall be black paired with red and shall be used to supply power to the unit.

Pair 2 shall be black paired with white and shall be tied back at both ends.

Pair 3 shall be black paired with green and shall connect to the relay contacts in the unit. In the cabinet, this pair shall be connected to the twenty-four (24) volt AC transformer secondary and the isolation relay.

H. Isolation Relay

For each detector, a socket-mounted isolation relay shall be provided for the controller cabinet assembly. The relay shall be an RH1B-UAC24V with snap mount socket and aluminum din rail. One leg of the relay coil shall connect to the twenty-four (24) volt AC transformer secondary while the other leg shall be fused and connect to the detector unit relay.

Article 18.5 Video Detectors

Video Detectors shall not be used without prior approval of the Traffic Engineer.

Article 18.6 Measurement

Loop detectors will be measured as units, complete and in place, including all labor, equipment, specified materials and miscellaneous materials to provide a complete and functioning unit, including the home run to the nearest junction box. Bid item “Install Loop Detectors in Existing Pavement” includes, but is not limited to, all costs of cutting and restoring existing pavement; excavation; disposal of surplus or unusable material; and placement of leveling course.

Optical preemption detectors, radar detectors and ultrasonic detectors shall be measured as units, complete and in place, including all labor, equipment, specified materials and miscellaneous materials to provide a complete and functioning unit, including all wiring to the controller cabinet assembly and all hardware installed in the cabinet.

Article 18.7 Basis of Payment

Payment for this Work shall be in accordance with Division 10, Section 10.07, Measurement and Payment, and shall include full payment for all Work described in this Section.

Payment will be made under the following units:

ITEM	UNIT
Install Loop Detector - New Work	Each
Install Loop Detector - Existing Pavement	Each
Install Optical Preemption Detector (Type)	Each
Install Radar Detector	Each
Install Ultrasonic Detector	Each
Install Video Detectors	Each

SECTION 80.19 VEHICLE SIGNAL HEADS

Article 19.1 General

LED Signal Heads shall conform to the following publications:

A. Circular Indications: Vehicle Traffic Control Signal Heads: Light Emitting Diode (LED) Circular Signal Supplement, 6/27/05 (ITE Publication ST-052). This is hereafter referred to as "VTCSH-05".

B. Arrow Indications: Vehicle Traffic Control Signal Heads – Light Emitting Diode (LED) Vehicle Arrow Traffic Signal Supplement 7/1/07 (ITE Publication ST-054), 4/3/06. This is hereafter referred to as "VTCSH-Arrow-07."

Each signal head shall be adjustable, vertical type with the number and type of sections as specified herein and shown on the Drawings; shall provide an indication in one direction only; shall be adjustable through 360 degrees about a vertical axis; and shall be mounted at the location and in the manner shown on the plans.

Vehicle Signal Heads shall have Light Emitting Diode (LED) lamps for all red, green and yellow indications. Red, green and yellow lamps shall conform to Article 19.4 – Light Emitting Diode (LED) Optical Units.

Each lens shall be provided with a removable tunnel visor, with an open slot at the bottom. The visor shall be constructed of aluminum. The color shall be Econolite green and black.

Vehicle signal housings shall conform to the following:

1. All parts of the housing, including the doors and end plates, shall be of die cast aluminum conforming to the specifications of ASTM B85, and all parts shall be clean, smooth, and free from flaws, cracks, blow holes, or other imperfections, unless otherwise called for on the plans.
2. The housing of each signal section shall be one piece with integral top, bottom, and sides, with square doors.
3. All exposed bolts, screws, hinges pins, and door locking devices shall be stainless steel. All interior screws and fittings shall be stainless steel or approved non-ferrous, corrosion-resistant material.
4. The top and bottom of each housing shall have an opening to accommodate standard one and one-half inch (1-1/2”) pipe fittings and brackets.
5. The top and bottom opening of the housing shall have an integral serrated boss that will provide positive positioning of the signal head in five (5) degree increments to eliminate undesirable rotation or misalignment of the signal head as well as between sections. A total of seventy-two (72) teeth shall be provided in the serrated boss. The teeth shall be clean and sharp to provide positive positioning with the grooves of the mating section or framework.
6. Individual signal sections shall be fastened together with a cadmium-plated tri-stud connector, lock washers, and nuts with access holes for the passage of electrical conductors from one section to another.

7. Each signal housing shall have two (2) integral hinge lugs located on the left side for mounting the door.

8. One (1) or two (2) latches shall be provided on the right side of each signal housing with stainless steel wing nut assemblies for the purpose of engaging the door latches.

9. Each signal housing shall have a door opening for the periphery which shall have a soft, closed-cell neoprene gasket to provide a weather-tight seal with the mating door.

10. The door of each signal housing shall be provided with a round opening designed to accommodate any standard traffic signal lens.

Article 19.2 Installation

A. Vehicle signal heads shall not be installed at any intersection until all other signal equipment, including the controller, is in place and ready for operation at that intersection, unless the faces are not directed toward traffic or unless the faces are adequately covered. Contractor shall cover heads with beige colored canvas shirts sized to fit the signal faces shown in the Drawings. Each shirt shall feature elasticized openings that fit over the visors and at least two straps to secure it to the signal. Provide shirts with a legend that reads “out of service” and a center section that allows an operator to see the indications during system tests.

B. Signal heads, backplates, visors, mounting brackets and fittings shall be painted as specified in Section 80.16, Article 16.4 - Painting for Steel Structures.

C. Vehicle signal head mounting hardware shall be attached to the side of pole that faces away from traffic unless otherwise approved by the Engineer.

D. All conductor access holes drilled for side mounted vehicular signal heads shall be deburred inside and out to prevent scraping of the conductors. The holes shall be cleaned and painted with two (2) coats of zinc chromate primer for metal.

E. Through phase vehicle signal faces shall be aimed at a point located a distance from the face as shown in the following table. If two (2) through signal faces are not visible from this point at an eye height of three and one-half feet (3.5’) above finished grade, then the Traffic Engineer shall be consulted for corrective measures.

Signal Head Visibility Distances

Posted Speed Limit (mph)	Minimum Visibility Distance (ft.)
20	328
25	394
30	460
35	540
40	390
45	624
50	722
55	820
60	902

F. Backplates shall be attached to the signal head using plated steel rivets with large flange button heads. The rivet shall be two-tenths inches (0.2”) in diameter and 0.575 inches long and at least 2380 N and 3000 N shear and tensile strength, respectively. Bore out the mounting holes in the backplates and signal heads to the diameter recommended by the rivet manufacturer.

G. Each lens shall be provided with a removable tunnel visor, with an open slot at the bottom, constructed of aluminum and securely installed using machine screws. The threads of the machine screws shall be coated with an antiseizing compound before installation.

H. Removal and relocation of existing signal heads, as shown on the Drawings, shall utilize new mounting hardware.

I. When installing LED signal heads, the Contractor shall clearly and permanently mark the date installed on the back of each unit.

Article 19.3 Signal Head Mounting

Mast arm mounted signal head locations shown on the Drawings are approximate. Signal heads shall be installed over lane lines or over the center of lanes, as shown on the Drawings. Mounting locations shall be verified using the as-built lane markings and signal pole foundation location. Obtain the approval of the Engineer before wire access holes are drilled in mast arms.

A. Mast Arm Signals

Signal head assembly for suspension from mast arm shall be equipped with a bronze plumbizer.

All holes in mast arms shall be field drilled to ensure proper location of signal heads with respect to traffic lanes. Arms shall be drilled for wire accesses after installation on the base of the pole. The wire hole locations shall be directly centered on the mounting bracket on the signal head side of the mast arm.

All mast arm mounted signal heads shall be mounted using "Astro-Brac" band mount clamp kits part number AB-3007-L (with stainless upgrade option), brackets manufactured by Pelco Products Inc., or an approved substitute. The mounting nipple shall be a two inch (2”) rigid metal conduit, cut to a length of six inches (6”). The mounting nipple shall have one inch (1”) of tapered thread on one end, be drilled to accept the plumbizer through bolt and all openings shall be deburred.

B. Pole and Post Mounted Signals

Bracket mounted signal heads, as shown on the Drawings, shall be supported by mounting brackets consisting of watertight assemblies of one and one-half inch (1 1/2") standard steel pipe and malleable iron or brass pipe fittings. All members shall be either plumb or level, symmetrically arranged, and securely assembled. Construction shall be such that all conductors are concealed within the assembly.

The horizontal nipples shall be of adequate length to achieve the required offsets indicated on Standard Details 80-27 and 80-29. Offsets are calculated from center of signal head mounting opening to center of vertical riser on terminal compartments. Side mounted frames twenty-two inches (22”), double head post top mount eleven inches (11”), and single head post top mount six inches (6”).

Where four- (4-) or five- (5-) section vertical signal heads are side mounted on poles, a steel conduit hanger shall be installed on the vertical framework pipe, six inches (6”) down from the upper horizontal framework pipe. A conduit hanger shall be mounted to the pole with a five-sixteenth inch (5/16”) bolt and lock washer.

Pole side mounted traffic signal heads shall be mounted on the back side of pole unless noted or detailed otherwise on the Drawings. The pole/post-mounted traffic signal heads shall be mounted so that no portion of the backplates are hidden by the pole/post.

At each signal location, unless otherwise shown on the Drawings, a terminal compartment shall be constructed into the mounting brackets.

For post-top mounting of bracket mounted signals, the terminal compartment shall be cast with an integral slip-fitter.

For post-top mounting of a one-way signal head, a slip-fitter without a terminal compartment may be used.

Post-top signal heads with backplates shall be mounted with an offset slip-fitter to allow the signal head backplate to clear the signal pole.

Attach each side mounted terminal compartment with two one-half by thirteen inch (1/2” x 13”) bolts with washers, threaded into holes tapped into the side of the pole.

C. Programmed Visibility Traffic Signal Heads

The Contractor shall program the head as recommended by the manufacturer and as directed.

When programmed, each signal face’s indication shall be visible only in those areas or lanes to be controlled, except that during dusk and darkness a faint glow to each side will be permissible.

Article 19.4 Light Emitting Diode (LED) Optical Units

All LED vehicle lamps shall be GELcore, Dialight or an approved equal. Any substitutions must be submitted to the Traffic Engineer for testing and approval prior to bid award. LED vehicle lamps shall meet the following specifications:

A. Definition

1. Eight inch (8”) and twelve inch (12”) indications for all vehicle traffic signals faces shall utilize light emitting diode signal modules.
2. Light emitting diode (LED) signal modules shall consist of an assembly that utilizes light emitting diodes as the light source in lieu of an incandescent lamp for use in traffic signal sections.

B. General

1. LED signal modules shall be designed to be installed in the doorframe of a standard traffic signal housing. The lamp socket, reflector, reflector holder and lens used with an incandescent lamp shall not be used in a signal section in which an LED signal module is installed.

2. LED signal modules shall be a sealed unit with two (2) conductors for connecting to power, a printed circuit board, power supply, a lens and gasket, and shall be weather proof after installation and connection. The circuit board and power supply shall be contained inside the module.

3. Conductors for modules shall be forty inches (40”) in length, with insulated quick disconnect terminals.

4. The lens of the module shall be integral to the unit, shall be convex with a smooth outer surface and made of ultraviolet stabilized plastic or of glass. The lens shall be capable of withstanding ultraviolet (direct sunlight) exposure for a minimum period of five (5) years without exhibiting evidence of deterioration.

5. The module shall be sealed in the door frame with a one-piece EPDM (ethylene propylene rubber) gasket.

6. The LEDs shall utilize AlInGaP technology and shall be the ultra bright type rated for 100,000 hours of continuous operation from -40°F to 165°F (-40°C to 74°C). AlGaS LEDs will not be allowed.

7. The failure of an individual LED in a string shall only result in the loss of that LED, not the entire string or indication.

8. Furnish LED signal modules rated for a minimum useful life of sixty (60) months and that meet current ITE Standards for LED signal modules.

C. Physical and Mechanical Requirements

1. LED traffic signal modules shall be designed as retrofit replacements for existing optical units of signal lamps and shall not require special tools for installation. LED signal modules shall fit into existing traffic signal section housings built to the VTCSH standard without modification to the housing.

2. Installation of an LED signal module shall only require the removal of the optical unit components, i.e., lens, lamp module, gaskets, and reflector; shall be weather tight and fit securely in the housing; and shall connect directly to electrical wiring.

   <u>LED Signal Module Lens</u>. The LED signal module shall be capable of replacing the optical unit. The lens may be tinted or may use transparent film or materials with similar characteristics to enhance ON/OFF contrasts. The use of tinting or other materials to enhance ON/OFF contrasts shall not affect chromaticity and shall be uniform across the face of the lens.

   <u>Use only clear lenses for all green signal modules</u>.

   If a polymeric lens is used, a surface coating or chemical surface treatment shall be used to provide front surface abrasion resistance.

   <u>Environmental Requirements</u>. The LED signal module shall be rated for use in the operating temperature range of -40°F to 165°F (-40°C to 74°C).

   The LED signal module shall be protected against dust and moisture intrusion per the requirements of NEMA Standard 250-1991 for Type 4 enclosures to protect all internal components.

The LED signal module lens shall be UV stabilized.

Construction. The LED signal module shall be a single, self-contained device, not requiring on-site assembly for installation into an existing traffic signal housing. The power supply for the LED signal module shall be integral to the unit.

Module Identification. Each LED signal module shall have the manufacturer's name, trademark, and other necessary identification permanently marked on the back of the module. Each individual LED signal module shall be identified for warranty purposes.

The following operating characteristics shall be identified: rated voltage, power consumption, and volt-ampere.

Each LED signal module shall have prominent and permanent vertical marking(s) for correct indexing and orientation within signal housing. The markings shall consist of an up arrow, or the word "UP" or "TOP."

D. Photometric Requirements

1. LED traffic signal modules shall meet at least eighty-five percent (85%) of the minimum VTCSH intensity requirements while operating throughout the operating temperature range of -40°F to 165°F (-40°C to 74°C).

2. The minimum initial luminous intensity values for LED traffic signal modules shall be as defined in Section 11.04 of the VTCSH standard at 77°F (25°C).

3. The measured chromaticity coordinates of LED signal modules shall conform to the chromaticity requirements of Section 8.04 and Figure 1 of the VTCSH standard.

E. Electrical

1. LED signal modules shall operate from a sixty-hertz (60 Hz) ±3 Hz AC line over a voltage ranging from eighty (80) volts to one hundred thirty-five (135) volts. The LED circuitry shall prevent perceptible flicker over the voltage range specified above. The fluctuations of line voltage shall have no visible effect on the luminous intensity of the indications. Rated voltage for all measurements shall be one hundred twenty (120) volts. The LED traffic signal lamp unit shall not be capable of functioning at less than forty-five (45) volts.

2. All wiring and terminal blocks shall meet the requirements of Section 13.02 of the VTCSH standard. Two (2) secured, color-coded, 1 m long 600 V, 20 AWG minimum, jacketed wires, conforming to the National Electric Code, rated for service at 221°F (+105°C), are to be provided for electrical connection for each LED signal module.

3. The signal module on-board circuitry shall include voltage surge protection to withstand high-repetition noise transients as stated in Section 2.1.6 of NEMA Standard TS-2, 1992.

4. LED signal modules shall be operationally compatible with currently used controller assemblies (solid state load switches, flashers, and conflict monitors).

5. LED signal modules and associated on-board circuitry must meet Federal Communications Commission (FCC) Title 47, Subpart B, Section 15 regulations concerning the emission of electronic noise.

6. The LED signal module shall provide a power factor of nine-tenths (0.90) or greater.

7. Total harmonic distortion (current and voltage) induced into an AC power line by a LED signal module shall not exceed twenty percent (20%).

F. Production Testing Requirements

1. Each new LED traffic signal lamp unit shall be energized for a minimum of twenty-four (24) hours at operating voltage and at a temperature of 140°F (60°C) in order to cause any electronic infant mortality to occur, and to ensure electronic component reliability prior to shipment.

2. After the burn-in procedure is completed, each LED traffic signal lamp unit shall be tested by the manufacturer for rated initial intensity at rated operating voltage.

G. Warranty

The manufacturer shall provide a written warranty against defects in materials and workmanship for the LED signal modules for a period of sixty (60) months after installation of the modules. Replacement modules shall be provided promptly after receipt of modules that have failed at no cost to the Owner except cost of shipping of the failed modules. Provide the Engineer with all warranty documentation prior to installation. Deliver the replacement modules to Traffic Signal Electronics Shop within five (5) working days of notification. The warranty does not include the costs associated with removing and reinstalling units that are replaced or repaired.

Article 19.5 Incandescent Optical Units

A. Each optical unit shall consist of a lens, a reflector, a lamp holder, and a clear incandescent traffic signal lamp.

B. Lenses shall be circular in shape and glass construction.

C. The lamp holder shall be secured to the reflector to provide a dust and moisture proof seal.

D. The reflector and lamp holder shall be held securely in place with the outer edge of the reflector engaging the lens gasket to provide a light and moisture seal for the entire optical assembly.

E. All lamp holders shall be so wired that a white wire will be connected to the shell of the lamp holder and a black or colored wire to the bottom or end terminal of the lamp holder. These wires shall, in turn, be connected to the terminal block mounted inside at the back of the housing. The terminal block shall have sufficient screw type terminals to terminate all field wires and lamp wires independently, with separate screws. The terminals to which field wires are attached shall be

permanently identified or wiring shall be color-coded to facilitate fieldwork. The terminal block shall be located in the center section of the head.

F. Lamps for the twelve inch (12”) units shall be 1,950 lumen minimum initial output, 120 volt, 6,000 hour rated life, clear, traffic signal lamps, unless specified otherwise in the Drawings.

G. Lamps for the eight inch (8”) units shall be 665 lumen minimum initial output, 120 volt, 6,000 hour rated life, clear, traffic signal lamps.

H. Reflectors shall be made of Alzak finished aluminum, the thickness of the anodic coating to be a minimum of 0.0001 inches, or its equivalent, spun or drawn from metal not less than 0.025 inches thick equipped with a bead or flange on the outer edge to stiffen the reflector and insure its being held true to shape. The reflecting surface shall be totally free of flaws, scratches, defacements or mechanical distortion.

Article 19.6 Backplates

Backplates shall be furnished and attached to all vehicle signal heads, including programmed-visibility signal heads, except for post-mounted flashers which will be installed without backplates.

Backplates shall be aluminum and the color shall be Econolite green and black. Backplate extensions (borders) shall be five inches (5”) wide. Where a backplate consists of two (2) or more sections, they shall be fastened together with aluminum rivets or boltsand peened after assembly to prevent loosening.

Construct backplates of 0.063-inch minimum thickness aluminum alloy sheet meeting ASTM B 209, alloy 3003-H14.

Backplates shall be painted as specified in Section 80.16, Article 16.4 – Painting for Steel Structures.

Article 19.7 Signal Head Mounting Hardware

A signal head assembly for suspension from mast arm shall be equipped with a bronze plumbizer.

All mast arm mounted signal heads shall be mounted using "Astro-Brac" band mount clamp kits part number AB-3007-L (with stainless upgrade option) brackets manufactured by Pelco Products, Inc., or an approved substitute. The mounting nipple shall be a two inch (2”) rigid metal conduit, cut to a length of six inches (6”). The mounting nipple shall have one inch (1”) of tapered thread on one end, be drilled to accept the plumizer through bolt, and all openings shall be deburred.

A. Pipe and Fittings

Bracket mounting hardware shall be one and one-half inch (1 1/2") standard steel pipe and malleable iron or brass pipefittings. Construction shall be such that all conductors are concealed within a watertight assembly.

Signal heads shall be equipped with positive brass lock rings and fittings designed to prevent heads from turning due to external forces. Lock ring and connecting fittings shall have serrated contacts.

B. Terminal Compartment

Terminal compartments shall be bronze of sufficient strength to remain intact in event the pole is knocked down.

For post-top mounting of bracket mounted signals, the terminal compartment shall be cast with an integral slip-fitter. Each terminal compartment shall be fitted with a terminal block containing twelve (12) poles, each with two (2) screw type terminals. Each terminal shall accommodate at least three (3) No. 14 AWG conductors. A raintight cover shall be provided, giving ready access to the terminal block.

C. Slip-fitters

Slip-fitter shall fit over a four inch (4”) standard pipe or four and one-half inch (4 1/2") outside diameter end of tapered standard. Each slip-fitter shall be provided with two (2) rows of steel set screws, with three (3) screws in each row to secure the assembly in plumb position. Set screws shall be cadmium plated.

Slip-fitters, where used without integral terminal compartment, shall be of cast-iron.

Post-top signal heads with backplates shall be mounted with an offset slipfitter to allow the signal head backplate to clear the signal pole.

D. Painting

Mounting brackets and fittings shall be painted as specified in Section 80.16, Article 16.4 – Painting for Steel Structures.

Article 19.8 Programmed Visibility Traffic Signal Heads

Each programmed visibility signal face and the installation thereof shall conform to the provisions of Article 19.1 - General; Article 19.2 - Installation; Article 19.3 - Signal Head Mounting; and Article 19.7 - Signal Head Mounting Hardware, except as modified in this subsection.

Each programmed visibility signal section shall provide a nominal twelve inch (12”) diameter circular or arrow indication. Color and arrow configuration shall conform to the latest I.T.E. Specification.

Each section shall be provided with a sun visor.

Each signal section shall be provided with an adjustable connection that permits incremental tilting from zero (0) to ten (10) degrees above or below the horizontal while maintaining a common vertical axis through couplers and mounting axis in five (5) degree increments.

The signal shall be mountable with ordinary tools and capable of being serviced without tools. Adjustment shall be preset at four (4) degrees below the horizontal, unless otherwise specified.

The visibility of each programmed visibility signal face shall be capable of adjustment or programming within the face. When programmed, each signal face’s indication shall be visible only in those areas or lanes to be controlled, except that during dusk and darkness a faint glow to each side will be permissible.

Prior to programming, each signal section with a yellow indication shall provide a minimum luminous intensity of three thousand (3,000) candela on the optical axis, and a maximum intensity of thirty (30) candela at fifteen (15) degrees horizontal from the axis.

Each such signal section shall be capable of having its visibility programmed to achieve the following luminous intensities: a minimum of 3,000 candela on the optical axis, a maximum of one hundred (100) candela at from one-half (1/2) to two (2) degrees horizontal from the axis and a maximum of ten (10) candela at from two (2) to fifteen (15) degrees horizontal from the axis. Under the same conditions, the intensities of the red indication and the green indication shall be at least nineteen percent (19%) and thirty-eight percent (38%) respectively of the yellow indication.

Each signal face or each signal section shall include integral means for regulating its luminous intensity between limits in proportion to the individual background luminance. Lamp intensity shall not be less than ninety-seven percent (97%) of uncontrolled intensity at 1000 foot-candles, and shall reduce to 15±two percent of maximum intensity at less than one foot-candle. The dimming device shall operate over an applied voltage range of ninety-five (95) to one hundred thirty (130) volts, sixty hertz (60 Hz) and a temperature range of -40°C to 74°C.

The Contractor shall supply the material required for programming of the head. The programming of the head shall be accomplished by the Traffic Signal Electronics Shop.

Article 19.9 Measurement

New and relocated signal heads will be measured as units, complete and in place, including all labor, mounting hardware, equipment and materials to provide a complete and functioning unit. Measurement shall be for the actual number of existing signal heads removed and relocated, and the actual number of new signal heads having the specified number of indicators of the specified size. Left arrow, right arrow, and round ball faces of the same size will be considered identical pay items.

Article 19.10 Basis of Payment

Payment for this work shall be in accordance with Division 10, Section 10.07 - Measurement and Payment, and shall be full payment for all Work described in this Section.

Payment will be made under the following units:

ITEM	UNIT
(8 or 12) inch (3, 4, 5) Face Signal Head	Each
Remove and Relocate Existing Signal Head	Each

SECTION 80.20 PEDESTRIAN SIGNALS

Article 20.1 General

Pedestrian signals shall be the Light Emitting Diode (LED) Type.

Pedestrian signals shall show the following:

1. Steady "WALKING PERSON" during the pedestrian interval.
2. Flashing "HAND" and countdown time “XX” in seconds during the pedestrian clearance interval.
3. Steady "HAND" after the pedestrian clearance and during the associated phases yellow and all red vehicle clearance intervals.
4. Dark during intersection flash.

Pedestrian signal mounts shall be two-piece hinge connected type (clamshell) unless otherwise shown on the Drawings.

Conductors shall be #14 AWG or larger conforming to IMSA Specification 20-1.

Article 20.2 Installation

Pedestrian signal heads shall be directed at the center of the crosswalk on the opposite side of the street.

Pedestrian signal heads shall not be installed at any intersection until all other signal equipment, including the controller, is in place and ready for operation at that intersection, unless the faces are not directed toward traffic or unless the faces are adequately covered. Contractor shall cover heads with beige colored canvas shirts sized to fit the signal faces shown in the Drawings. Each shirt shall feature elasticized openings that fit over the visors and at least two straps to secure it to the signal. Provide shirts with a legend that reads “out of service” and a center section that allows an operator to see the indications during system tests.

Pedestrian signal head mounting hardware shall be attached to the side of pole that faces away from traffic unless otherwise approved by the Traffic Engineer.

All conductor access holes drilled for side mounted pedestrian heads shall be deburred inside and out to prevent scraping of the conductors. The holes shall be cleaned and painted with two (2) coats of zinc chromate primer for metal.

Removal and relocation of existing signal heads, as shown on the Drawings, shall utilize new mounting hardware.

When installing LED signal heads, the Contractor shall clearly and permanently mark the date installed on the back of each unit.

Article 20.3 Mounting

Side mounted pedestrian signal hardware shall consist of a two-piece, hinge connected, cast aluminum bracket that mounts directly between the pole and the side of the signal head housing. Clearance between the head and pole shall not exceed three inches (3”). The bracket shall properly fit any round pole four inches (4”) or greater in diameter and be capable of being rotated a minimum of thirty (30) degrees when mounted on a

four inch (4”) pole. A raintight, three (3) position terminal block shall be contained within the mounting bracket.

Bracket mounted signal heads, as shown on the Drawings, shall be supported by mounting brackets consisting of watertight assemblies of one and one-half inch (1 1/2") standard steel pipe and malleable iron or brass pipefittings. All members shall be either plumb or level, symmetrically arranged, and securely assembled. Construction shall be such that all conductors are concealed within the assembly. A terminal compartment shall be constructed into the mounting bracket.

At each signal location, unless otherwise shown on the Drawings, a terminal compartment shall be constructed into the mounting brackets.

Terminal compartments shall be bronze of sufficient strength to remain intact if the pole is knocked down.

Mounting brackets and fittings shall be painted as specified in Section 80.16, Article 16.4 – Painting for Steel Structures.

Attach each clamshell bracket with two one-half by thirteen inch (1/2” x 13”) bolts threaded into holes tapped into the side of the pole. Install a spacer, furnished by the bracket manufacturer, on each bolt.

Article 20.4 Housing

A. The case shall be a one-piece, corrosion-resistant, aluminum-alloy die-casting complete with integrally cast top, bottom, sides and back. Four (4) integrally cast hinge lug pairs, two (2) at the top and two (2) at the bottom of each case, shall be provided for operation of a swing-down door.

B. The case for pedestrian signals shall be dustproof, weatherproof, corrosion resistant, and shall provide for easy access to, and replacement of, all components.

C. Three (3) versions of the case shall be available. The first version shall be supplied with clamshell mounting hardware installed (ordered concurrently) for installation of "pole left of message." The second version shall be the "pole right of message." The third version shall contain upper and lower openings as described below suitable for either post top or bracket mounting. The first and second versions need not include upper and lower openings, but when provided shall be plugged to be weathertight.

D. The third version shall accommodate standard one and one-half inch (1 1/2”) pipe brackets, top and bottom. The bottom opening of the signal case shall have a shurlock boss integrally cast into the case. The dimensions of the shurlock boss shall be as follows:

Outside Diameter	2.625 inches
Inside Diameter	1.969 inches
Number of Radial Teeth	72
Depth of Teeth	5/64 inch

The teeth shall be clean and sharp and provide full engagement to eliminate rotation or misalignment of the signal.

E. The door frame shall be a one-piece, corrosion-resistant, aluminum-alloy die-casting, complete with two (2) hinge lugs cast at the bottom and two (2) latch lots cast at the top of each door. The door shall be attached to the case by means of two (2) Type 304 stainless steel spring pins. Two (2) stainless steel hinged bolts with captive stainless steel wingnuts and washers shall be attached to the case with the use of stainless steel spring pins. Hence, latching or unlatching of the door shall require no tools.

F. "Z-crate" or "Egg-crate" type filters shall not be used.

G. All machine screws, studs and washers shall be stainless steel.

H. Gaskets shall conform to the provisions in ASTM D-1056, Grade RE 42.

I. The outside of the housing shall be painted in accordance with the provisions of Section 80.16, Article 16.4 – Painting for Steel Structures.

J. The housings shall accept a sixteen inch by eighteen inch (16” x 18”) pedestrian module.

Article 20.5 Light Emitting Diode (LED) Pedestrian Signal Modules

A. General

LED traffic signal modules shall meet the current ITE standards.

B. Installation

1. LED pedestrian signal modules shall be designed as retrofit replacements for the existing pedestrian signals (ICC 4090 and/or 4094).
2. LED pedestrian signal modules shall not require special tools for installation.
3. LED pedestrian signal modules shall fit into the existing traffic housings built to the PTCSI standard without any modification to the housing.
4. LED pedestrian signal modules shall be weathertight, fit securely in the housing and shall connect directly to existing electrical wiring.
5. Installation of a replacement LED module into the existing pedestrian housing shall only require removal of the existing optical unit components, i.e., lens, lamp, gaskets, and reflector.
6. Each retrofit shall include all necessary components to complete conversion, including a one-piece gasket.
7. Each pedestrian module shall have a sticker attached stating compliance to the ITE standard for color.

C. LED Signal Lens

1. The lens of the LED pedestrian signal modules shall be field replaceable.
2. The lens of the LED pedestrian signal modules shall be polycarbonate UV stabilized and a minimum of six millimeters (6 mm) thick.

3. The exterior of the lens of the LED pedestrian signal module shall be smooth and frosted to prevent sun phantom.

D. LED Pedestrian Signal Module Construction

1. The LED pedestrian signal module shall be a single, self-contained device, not requiring on-site assembly for installation in the existing traffic signal housing.

2. All Portland Orange LEDs shall be “AlInGaP” technology or equal, and rated for 100,000 hours or more at +165°F (+25°C) and twenty milliamps (20 mA). “AlInGaS” technology is not acceptable.

3. Each individual LED traffic module shall be identified for warranty purposes with the manufacturer’s trade name, serial number and operating characteristics, i.e., rated voltage, power consumption, and volt-ampere.

E. Environmental Requirements

1. The LED pedestrian signal modules shall be rated for use in the ambient operating temperature range of -40°F to +140°F (-40°C to +60°C).

2. The LED pedestrian signal modules, when properly installed with gasket, shall be protected against dust and moisture intrusion per requirements of MIL-STD-810F Procedure 1, Rain and Blowing Rain.

F. Luminous Intensity

1. Pedestrian LED signal modules shall be designed so, that when operated over the specified ambient temperature and voltage range, the signal shall attract the attention of, and be readable to, a viewer (both day and night) at all distances from ten feet (10’) to the full width of the area to be crossed.

2. The luminous intensity of the LED pedestrian signal module shall not vary more than ±10% for voltage range of 80 VAC to 135 VAC.

G. Chromacity

The measured chromaticity coordinates of the LED signal modules shall conform to the chromaticity requirements of Section 5.3 and Figure C of PTCSI standard.

H. Electrical

1. The secured, color-coded, one meter (1 m) long, 600V, 20 AWG minimum, jacketed wires, conforming to the National Electrical Code, rated for service at +221°F (+105°C), twelve millimeter (12 mm) stripped and tinned are to be provided for electrical connection.

2. The LED pedestrian signal module shall operate from a 60 ±3Hz AC line over a voltage range of 80 VAC to 135 VAC. Rated voltage for all measurements shall be 120 ±3 volts rms.

3. The LED circuitry shall prevent perceptible flicker over the voltage range specified above.

4. The LED pedestrian signal module circuitry shall include voltage surge protection against high-repetition noise transients as stated in Section 2.1.6, NEMA Standard TS-2, 1992.

5. Catastrophic failure of one LED light source shall not result in the loss of more than the light from that one LED.

6. The LED pedestrian module shall be operationally compatible with the currently used controller assemblies. The LED pedestrian module shall be operationally compatible with conflict monitors.

7. The LED pedestrian module including its circuitry must meet Federal Communications Commission (FCC) Title 47, Subpart B, Section 15 regulations concerning the emission of noise.

8. The LED pedestrian module shall provide a power factor of 0.90 or greater over the operating voltage range and temperature range specified above for modules with six (6) watts or more.

9. Total harmonic distortion (current and voltage) induced into an AC power line by an LED pedestrian module shall not exceed twenty percent (20%) over the operating voltage range and temperature range specified above.

I. Production Testing Requirements

1. Each new LED traffic signal lamp unit shall be energized for a minimum of twenty-four (24) hours at operating voltage and at a temperature of 60°C in order to cause any electronic infant mortality to occur, and to ensure electronic component reliability prior to shipment.

2. After the burn-in procedure is completed, each LED traffic signal lamp unit shall be tested by the manufacturer for rated initial intensity at rated operating voltage.

J. Warranty

The manufacturer shall provide a written warranty against defects in materials and workmanship for the LED signal modules for a period of sixty (60) months after installation of the modules. Replacement modules shall be provided promptly after receipt of modules that have failed, at no cost to the Owner except cost of shipping the failed modules. All warranty documentation shall be given to the Engineer prior to installation. The replacement modules shall be delivered to the Traffic Signal Electronics Shop, within five (5) working days after notification. The warranty does not include the costs associated with removing and reinstalling units that are replaced or repaired.

Article 20.6 Measurement

New and relocated pedestrian signal heads will be measured as units, complete and in place, including all labor, mounting hardware, equipment, and materials to provide a complete and functioning unit. Measurement shall be for the actual number of existing pedestrian signal heads removed and relocated, and the actual number of new signal heads installed.

Article 20.7 Basis of Payment

Payment for this Work shall be in accordance with Division 10, Section 10.07 - Measurement and Payment, and shall include full payment for all Work described in this Section.

Payment will be made under the following units:

ITEM	UNIT
Pedestrian Signal Head	Each
Remove and Relocate Pedestrian Signal Head	Each

SECTION 80.21 PEDESTRIAN PUSHBUTTONS

Article 21.1 General

Where shown on the Drawings, pedestrian push buttons of substantial tamper-proof construction shall be furnished and installed or relocated. Pedestrian pushbuttons shall be ADA-compliant and either DCC-4EVR 120 (rectangle), or Bulldog RBDLM2-B-4H. Substitutions must be approved by the Traffic Engineer or designated representative.

The assembly shall be weatherproof and so constructed that it will be impossible to receive an electrical shock under any weather conditions.

Where a pedestrian pushbutton is attached to a pole, the housing shall be shaped to fit the curvature of the pole and secured to provide a rigid installation. Saddles shall be provided to make a neat fit when required.

Pushbutton and sign shall be positioned on the sidewalk or pathway side of the pole. Arrows on signs shall point in the same direction as the corresponding crosswalk. Pushbutton and sign shall not contain indicator lights unless specified on the Drawings.

Pedestrian pushbutton signs shall be as detailed in the Manual on Uniform Traffic Control Devices (MUTCD) and the Alaska Sign Design Specifications (ASDS). The R10-3E (9”X15”) pushbutton sign shall be installed above each pushbutton with the arrow pointing in the direction of the appropriate cross walk. When channel is used for mounting pushbutton signs the top and bottom sign bolt shall be tapped into the pole. Signs shall be in accordance with Division 70, Section 70.11 – Standard Signs.

Article 21.2 Measurement

New and relocated pedestrian pushbuttons will be measured as units, complete and in place, including all labor, equipment, signs, and other material to provide a complete and working unit. Measurement shall be for the actual number of existing pushbutton assemblies removed and relocated, and the actual number of new pushbutton assemblies installed. Pedestrian pushbutton signs shall not be measured separately, and shall be considered part of the pushbutton assembly.

Article 21.3 Basis of Payment

Payment for this Work shall be in accordance with Division 10, Section 10.07 - Measurement and Payment, and shall include full payment for all Work described in this Section.

Payment will be made under the following units:

ITEM	UNIT
Pedestrian Pushbutton Assembly	Each
Remove and Relocate Pedestrian Pushbutton Assembly	Each

SECTION 80.22 FLASHING BEACONS

Article 22.1 General

A. Beacons

1. Intersection Control and Hazard Beacons

   Each beacon shall consist of one or more single section traffic signal heads, in accordance with the provisions in Section 80.19 - Signal Heads, with yellow or red LED modules as shown on the Drawings.

2. Warning Sign Beacons

   Each Warning Sign Beacons shall consist of twelve inch (12”) diameter yellow LED signal indications. The number of units, unit configuration and unit installation shall be as shown on the Drawings.

3. Speed Limit Sign Beacons

   The ‘SCHOOL SPEED LIMIT 20 WHEN FLASHING’ (S5-1) sign beacon assembly shall consist of four (4) signal heads with eight inch (8”) or twelve inch (12”) diameter yellow LED signal indications as shown on the Drawings. They shall be mounted horizontally directly above the S5-1 sign. The two upper beacons shall be illuminated alternately and face oncoming traffic. The lower beacons shall face the opposite direction and be illuminated alternately also.

4. Mast Arm Mounted Sign Beacons

   Each mast arm mounted sign beacon assembly shall consist of four (4) twelve inch (12”) diameter yellow LED signal indications with backplates, and two signs of the type and size indicated on the plans. All signs and signals shall be mounted on the mast arm, with two (2) signals and one (1) sign facing each direction. Any two (2) signals facing the same directions shall be illuminated alternately. Signal heads shall meet the requirements of Section 80.19 - Signal Heads.

B. Control Unit

1. Flashing Beacon Control Unit

   The Flashing Beacon Control Unit is to be used for the following: Intersection Control Beacons, Hazard Beacons and Crosswalk Warning Sign Beacons. Each control unit shall be a complete flasher cabinet assembly consisting of an On/Off switch, 15-ampere circuit breaker, surge protector, terminal blocks, flasher socket and NEMA flasher. The enclosure shall be a NEMA Type 3R, and shall be provided with a right side hinged door with locking mechanism.

2. Speed Limit Sign Beacon Control Unit

   Each control unit shall be a complete flasher cabinet assembly consisting of a 20-ampere circuit breaker, solid state surge protector, Radio Interference Suppresser, MOV (Metal Oxide Varistor) surge protector, thermostatically controlled incandescent cabinet light with door activated bypass switch, terminal blocks, flasher socket, NEMA flasher and digital time clock. The

enclosure shall be a NEMA Type 3R, and shall be vented and provided with a right side hinged door with locking mechanism.

3. Speed Limit Sign Beacon With Push Button Actuated Warning Beacon Control Unit

   Each control unit shall be a complete cabinet assembly consisting of a 20-ampere ciruit breaker, solid state surge protector, radio interference suppressor, MOV (Metal Oxide Varasitor) surge protector, thermostatically controlled incadencent cabinet light with door activated bypass switch, terminal blocks, flasher socket, NEMA flasher, digital time clock, analog timer and isolation relay. The enclosure shall be a NEMA Type 3R, and shall be vented and provided with a right side hinged door with locking mechanism.

4. Push Button Actuated Warning Beacon Control Unit.

   Each control unit shall be a complete cabinet assembly consisting of a 20-ampere circuit breaker, solid state surge protector, Radio Interference Suppresser, MOV (Metal Oxide Varistor) surge protector, thermostatically controlled incandescent cabinet light with door activated bypass switch, terminal block, flasher socket, NEMA flasher, analog timer and isolation relay. The enclosure shall be a NEMA Type 3R, and shall be vented and provided with a right side hinged door with locking mechanism.

C. Control Unit Component Specification

Control unit shall be wired in accordance with the latest cabinet wiring diagram available from the Traffic Signal Electronics Foreman.

Terminal blocks shall be in accordance with Section 80.17 - Controller Assemblies, except that a single three- (3-) position Box Lug type terminal block capable of accepting three (3) No. 6 AWG wires for terminating power cables must be supplied in all control units.

Switches shall be 15 ampere, single-pole, 120 volt AC.

The Metal Oxide Varistor (MOV), surge protector shall be a V130PA20A.

The cabinet light fixture shall be an incandescent type porcelain lamp holder rated for 660W-250V AC/CA. The lamp shall be 75W.

Flasher socket shall be Cinch-Jones socket S-406-SB, or equivalent.

Flasher shall be a NEMA 2 circuit, solid state, rated at 15 amperes per circuit flasher.

Digital time clock shall be an RTC AP41, or equivalent as approved by the Traffic Signal Electronics Foreman. Clock to be supplied with Speed Limit Sign Beacon Control Unit and Speed Limit Sign Beacon With Push Button Actuated Warning Beacon Control Unit.

Control unit, complete with all cabinet components, shall be delivered to Traffic Signal Electronics Shop for testing, prior to installation in the field.

Isolation Relay shall be IDEC power relay model RR2P-U (AC120)

Timer shall be IDEC analog timer RTE-P2 AF20

All other components shall meet the requirements of Section 80.17 - Controller Assemblies.

Article 22.2 Measurement

Flashing beacons, flashing beacon control units, and flashing beacon control units with push button actuated control will be measured separately as units, complete and in place, including all labor, equipment, and material to provide a complete and working unit.

Article 22.3 Basis of Payment

Payment for this Work shall be in accordance with Division 10, Section 10.07 - Measurement and Payment, and shall include full payment for all Work described in this Section.

Payment shall be made under the following units:

ITEM	UNIT
Intersection Control Beacon	Each
Hazard Beacon	Each
Warning Sign Beacons	Each
Speed Limit Sign Beacon	Each
Mast Arm Mounted Sign Beacon	Each
Flashing Beacon Control Unit	Each
Speed Limit Sign Beacon Control Unit	Each
Push Button Actuated Warning Beacon Control Unit	Each
Speed Limit Sign Beacon with Push Button Actuated Warning Beacon Control Unit	Each

SECTION 80.23 LUMINAIRES

Article 23.1 General

Luminaires shall be of the type shown on the Drawings.

Article 23.2 Light Distribution

Furnish luminaires having standard I.E.S. light distribution patterns as specified in the Contract Documents.

Prior to installation, Contractor shall check the socket position in the luminaire to verify that it corresponds to the setting indicated in the instructions for the light distribution type shown on the Drawings.

Vertical light distribution shall be short (s), medium (m), or long (l).

Cutoff shall be full-cutoff (f), partial-cutoff (p), or non-cutoff (n).

Lateral light distribution shall be Type 1, Type II, Type III or Type IV.

When cutoff fixtures are specified in the Special Provisions or shown on the Drawings, the optical assembly shall provide ninety-degree (90°) cutoff and shielding. The reflector shall be specifically designed to produce the specified ANSI and IES light distribution when used with one hundred fifty (150) through four hundred (400) watt high pressure sodium lamps. The fixture shall have a flat plate glass lens and no part of the lens shall project below the luminaire's metal housing.

Mast arm mounted luminaires shall be provided with slip-fitters designed for mounting on two-inch (2”) standard pipe.

All gaskets shall be composed of a material capable of withstanding the temperature involved and they shall be securely held in place.

All parts of the luminaire shall be manufactured from corrosion-resistant materials.

Manufacturer's luminaire specifications, shop drawings, and photometric data shall be submitted and approved before installing any luminaire on the project.

A. High Pressure Sodium

Contractor shall ensure all lenses are of the refractor type, and that the refractors are made of polycarbonate resin.

Contractor shall ensure the polycarbonate resin lenses are molded in a single piece. Contractor shall not use reworked compound whose properties have been impaired by previous molding operations. Contractor shall provide lenses free from cracks, blisters, burns and flow lines, furnished with the natural molded surface, uniform density throughout, free from air, gas, or moisture pockets, and uncured areas, as consistent with good manufacturing practice. Contractor shall provide transparent lenses having a clear bluish tint and produced from resin, which has been suitably ultraviolet stabilized to reduce the effects of ultraviolet radiation on their color properties. Resins used shall meet the requirements for the self-extinguishing classification of ASTM D 635. Resin shall have a minimum impact strength, Izod notched of twelve foot pounds per inch (12.0 ft. lbs./inch) when tested in accordance with ASTM D 256, Method A, using a one-quarter by

one-half inch (1/4” x 1/2") bar molded in accordance with ASTM-recommended practice.

The Contractor shall furnish a certificate of compliance from the lens fabricator that all requirements contained in the paragraph above have been met.

The refractor shall be mounted in a doorframe assembly which shall be hinged to the luminaire at the house side and fastened at the street side by means of an automatic type latch.

The refractor and doorframe assembly shall be forced upward at the street side by spring pressure, against the gasket seat, when in the closed and latched position.

B. Light Emitting Diode

Language being developed. Not ready for Draft.

Article 23.3 Measurement

Luminaires will be measured as units complete and in place, including all labor, equipment, and materials to provide a complete and functioning unit. No measurement for payment will be made until the functional test has been completed in accordance with Section 80.16, Article 16.2 – Field Tests.

Article 23.4 Basis of Payment

Payment for this Work shall be in accordance with Division 10, Section 10.07 - Measurement and Payment, and shall include full payment for all Work described in this Section.

Payment will be made under the following units:

ITEM	UNIT
Luminaire (Type) (Wattage/Lumens) (Vertical) (Cutoff) (Lateral)	Each

SECTION 80.24 BALLASTS

Article 24.1 General

Ballasts for high-intensity discharge lamps shall be an integral part of each luminaire and designed for the voltages and lamp types specified in the Drawings or Special Provisions. The current needed to start the lamps shall be less than the operating current.

Ballasts shall be the regulator type with copper windings electrically isolated from each other, and shall start and operate the lamps in temperatures down to -40°F. The allowable line voltage variation shall be at least plus and minus ten percent (10%).

High pressure sodium luminaires, except those with 1000 watt lamps, shall be equipped with magnetic regulator ballasts with the following additional operating characteristics:

1. The lamp wattage regulation spread at any time over the life of the lamp shall not exceed eighteen percent (18%) of nominal lamp watts at plus or minus ten percent (±10%) line voltage variations.
2. With nominal line and lamp voltages, the ballast shall regulate the lamp output to within five percent (5%) of the ballast design center, and sustain lamp operation with a minimum sixty percent (60%) voltage drop lasting four (4) seconds or less.
3. Grounded socket shell.

Luminaires with 1000 watt high pressure sodium lamps shall be equipped with auto-regulator ballasts that provide a maximum thirty percent (30%) lamp regulation spread, a minimum thirty-five percent (35%) voltage dip tolerance, and with nominal line and lamp voltages regulate lamp output to within five percent (5%) of the ballast design center.

Ballasts for use for soffit luminaires shall be furnished with mounting brackets attached and shall be equipped with terminal blocks for primary connections and lamp socket preconnected to the secondary for flush mounted luminaires and with terminal blocks for both primary and secondary connections for use with suspended luminaires.

The Contractor shall submit the ballast manufacturer's volt-watt trace and specification sheets to the Street Light Maintenance Supervisor for review and approval.

Article 24.2 Measurement

This item shall be considered incidental to other Work.

Article 24.3 Basis of Payment

No separate pay item will be allowed for this item.

SECTION 80.25 FALSEWORK LIGHTING

Article 25.1 General

When required by the Special Provisions, falsework lighting shall be installed where vehicular traffic with or without pedestrian traffic crosses through or under structure falsework.

Illumination of the portal faces of falsework shall be provided during the hours from dusk to dawn. Illumination of the pavement and pedestrian openings through or under falsework shall be provided twenty four (24) hours per day.

The Contractor shall submit a plan of the proposed lighting installations and shall not commence falsework construction until such Drawings have been reviewed by the Engineer. A subsequent review shall be made by the Engineer after falsework lights have been placed in operation.

Fixtures for illumination of roadway pavement between entrances and exit portals shall be enclosed in units with protective cover lens.

Fixture housing shall be heavy gauge, anodized aluminum and shall have an etched, anodized aluminum reflecting surface, or equivalent. Beam spread shall be between one hundred (100) and one hundred thirty (130) degrees.

Fixtures shall be equipped with high temperature glazed porcelain medium base sockets and six foot (6') conductors for splicing, approved by UL for outdoor use.

Fixtures shall be fully adjustable with bracket and locking screws on a mounting plate and shall provide mounting directly to a standard metal junction box.

Fixtures for pedestrian passageways shall be porcelain box receptacles mounted on standard metal junction boxes and equipped with wire lamp guards. Porcelain box receptacles shall be rated at six hundred sixty (660) watts, two hundred fifty (250) volts. Wire lamp guards shall be made of No. 10 AWG wire and shall be suitable for general construction work.

Lamps shall be of the medium base incandescent type. For pavement illumination, lamps shall be one hundred fifty (150) watts minimum. For pedestrian passageway illumination, lamps shall be one hundred (100) watts minimum.

The face of all falsework and forms located within or adjacent to the traveled way, on the approach side, shall be fully illuminated by a minimum of four (4) three hundred (300) watt PAR reflector flood lights directed upon the vertical and horizontal supports. The lights shall be located a minimum of ten feet (10') and a maximum of fifteen feet (15') from the portal faces adjacent to the traveled way and mounted a minimum of twelve feet (12') and a maximum of fifteen feet (15') high. When a median area contains falsework, a minimum of one (1) additional three hundred (300) watt PAR reflector flood light shall be installed in the same manner to illuminate the median support. Each flood light shall be aimed in such a manner as to preclude glare to oncoming motorists. Floodlights shall be mounted on temporary wood poles set in the ground and located on both sides of the traveled way.

For illumination of roadway pavement between entrance and exit portals, a continuous row of fixtures shall be installed over the center of each lane beneath the falsework structure at intervals of not more than fifteen feet (15') , with the end fixtures not further

than seven feet (7') inside the portal faces. Mounting height of fixtures over the pavement shall be as directed.

Pedestrian openings, through or under falsework, shall be illuminated with fixtures centered over the passageway at intervals of not more than fifteen feet (15') , with the end fixtures not more than seven feet (7') inside the portal faces and at a height of ten feet (10'), unless otherwise directed.

For roadway pavement and portal face illumination, No. 12 AWG conductors with Type XHHW insulation shall be used. For pedestrian passageways, conductors shall be No. 12 AWG and enclosed in a one-half inch(1/2") unpainted, zinc-coated metallic conduit.

Contractor shall provide two branch circuits. Pedestrian passageway lights and roadway pavement lights shall be on one (1) circuit and portal face floodlights shall be on a separate circuit. Each branch circuit shall be fused, not to exceed twenty (20) amperes.

The above-specified portal lighting shall be installed on the day that vertical supports are erected and before traffic is permitted to pass between these supports during the hours from dusk to dawn. The other falsework lights shall be installed as soon as the members on which they are to be supported are in place.

Upon completion of the project or when directed, falsework lighting equipment shall remain the property of the Contractor and shall be removed from the site of the Work.

Article 25.2 Measurement

Falsework lighting for each location will be measured as one lot, installed complete, including all labor, equipment, and material required to provide a complete and functioning system.

Article 25.3 Basis of Payment

Payment for this Work shall be in accordance with Division 10, Section 10.07 - Measurement and Payment, and shall include full payment for all Work described in this Section.

Payment will be made under the following units:

ITEM	UNIT
Falsework Lighting	Lot

SECTION 80.26 INTERCONNECT CABINET

Article 26.1 General

Install the interconnect cable termination cabinet when called for in the Drawings. All cables shall be terminated in the interconnect cable cabinet and none in the controller cabinet.

Furnish an interconnect termination cabinet that:

1. Is constructed from 16 gauge galvanized steel with an ANSI 61 gray polyester powder coat inside and out.
2. Meets NEMA Standards for Type 3R enclosures.
3. Has a 16-gauge galvanized steel continuous hinge with stainless steel pin.
4. Has a cover fastened securely with captive plated steel screws.
5. Is provided with a hasp and staple for padlocking.
6. Has no gasketing or knockouts.
7. Has no ventilating cover or louvers.
8. Has a standoff mounted back panel with grounding lug assembly.

Article 26.2 Measurement

Interconnect cabinets will be measured as units installed complete and in place, including all labor, equipment, and material to provide a complete and functioning unit.

Article 26.3 Basis of Payment

Payment for this Work shall be in accordance with Division 10, Section 10.07 - Measurement and Payment, and shall include full payment for all Work described in this Section.

Payment will be made under the following units:

ITEM	UNIT
Interconnect Cabinet	Each

SECTION 80.27 PROTECTIVE POST ASSEMBLY

Article 27.1 General

Protective post assembly shall be a concrete-filled Schedule 40, steel pipe installed in accordance with the appropriate Standard Details.

Article 27.2 Measurement

Protective post assembly will be measured as units installed complete and in place, including all labor, equipment, and material to provide a complete and functioning unit.

Article 27.3 Basis of Payment

Payment for this Work shall be in accordance with Division 10, Section 10.07 - Measurement and Payment, and shall include full payment for all Work described in this Section.

Payment will be made under the following units:

ITEM	UNIT
Protective Post Assembly	Each

SECTION 80.28 SALVAGING ELECTRICAL EQUIPMENT

Article 28.1 General

Unless otherwise specified or shown on the Drawings or Specifications, existing electrical equipment including but not limited to: luminaires, standards, mast arms, poles, caps, handhole covers, mounting bolts, controllers, cabinets, optical detectors, signal heads, pedestrian heads, service equipment, and junction box lids shall be salvaged and delivered to the Municipality of Anchorage Electronics Warehouse or the Municipality of Anchorage Pole Yard to be placed as directed by the Traffic Engineer.

Traffic Signal Electronics personnel and Street Light Maintenance personnel will be allowed to select the equipment and pole/arm items they would like to salvage. Contractor is responsible for disposal of all remaining items. All poles and arms not selected for salvage shall have the pole plate or arm plate cut off to render the item unusable.

Contractor shall contact the Traffic Signal Electronics Shop Foreman, at 343-8355, one week prior to the tentative delivery date.

Salvaged poles and mast arms shall be stripped of all wire and hardware and any damaged areas, and exposed hole edges shall be cleaned and painted with cold galvanizing paint in accordance with Section 80.16, Article 16.3 - Galvanizing. All caps, hand-hole covers, mast arms and mounting bolts shall be returned with the pole.

Removal, wire and hardware stripping, listed cleaning and cold galvanize painting, and delivery of all salvaged electrical equipment shall be considered incidental to the Contract and no separate payment shall be made.

When a controller assembly is to be salvaged, the salvage material shall include timing modules, switches, detector control units, conflict monitor unit, and all other equipment contained in the controller cabinet prior to award of the Contract.

Care shall be exercised in removing and salvaging electrical equipment so that it will remain in its original form and existing condition. The Contractor will be required to replace, at his expense, any of the above-mentioned electrical equipment which has been damaged or destroyed by his operations.

Unless otherwise specified, underground conduit, conductors, foundations and detectors not reused shall become the property of the Contractor and shall be removed from the project right-of-way. If said materials do not interfere with other construction, they may, with approval from the Engineer, be abandoned in place except that conductors must be removed from conduit prior to abandonment. Foundations abandoned in place shall conform to the requirements of Section 80.03 – Removing and Replacing Improvements.

Holes formed by removing pull boxes and foundations shall be filled with material equivalent to the original and compacted to the same density as the surrounding material.

When existing electrical equipment is to be reused, the Contractor shall furnish and install all necessary materials and equipment, including signal mounting brackets, anchor bolts, nuts, washers and concrete as required to complete the new installation.

All traffic signal, flashing beacon and lighting fixtures to be reinstalled shall be cleaned, relamped, and reconditioned in accordance with Section 80.16, Article 16.4 – Painting for Steel Structures.

Salvaged materials required to be reused and found to be unsatisfactory by the Engineer shall be replaced by new material and the cost will be paid as extra Work as provided in Division 10, Sections 10.05 – Control of Work and 10.07 – Measurement and Payment.

Article 28.2 Measurement

Measurement for removal of poles in this Section is per each unit removed; and includes all work and materials necessary to remove poles, hardware disposal, cutting poles to render them unusable, disassemble, salvage, disposal, and delivery to the Municipality of Anchorage Pole Yard as specified in the Drawings or in the Special Provisions. When Drawings are unclear as to the method of pole salvage or disposal, the Contractor shall contact the Traffic Engineer to receive specific instructions.

Removal of the pole foundation, in accordance with Section 80.03 - Removal and Replacing Improvements, and disposal of the pole foundation is incidental to the pay items in this Section. Salvage and delivery of existing signs, signal hardware and illumination hardware shall also be considered incidental to the pole removal pay items.

If Owner declines ownership, the poles, mast arms, and associated hardware become Contractor property.

Article 28.3 Basis of Payment

Payment for this Work shall be in accordance with Division 10, Section 10.07 - Measurement and Payment, and shall include full payment for all Work described in this Section.

Payment will be made under the following units:

ITEM	UNIT
Remove Luminaire Pole	Each
Remove Signal Mast Arm or Combination Pole	Each
Remove Signal Pedestal or Pedestrian Pushbutton Pole	Each

MUNICIPALITY OF ANCHORAGE
STANDARD SPECIFICATIONS

DIVISION 80
TRAFFIC SIGNALS AND ILLUMINATION
STANDARD DETAILS

STANDARD CONSTRUCTION SPECIFICATIONS
DIVISION 80
INDEX OF STANDARD DETAILS

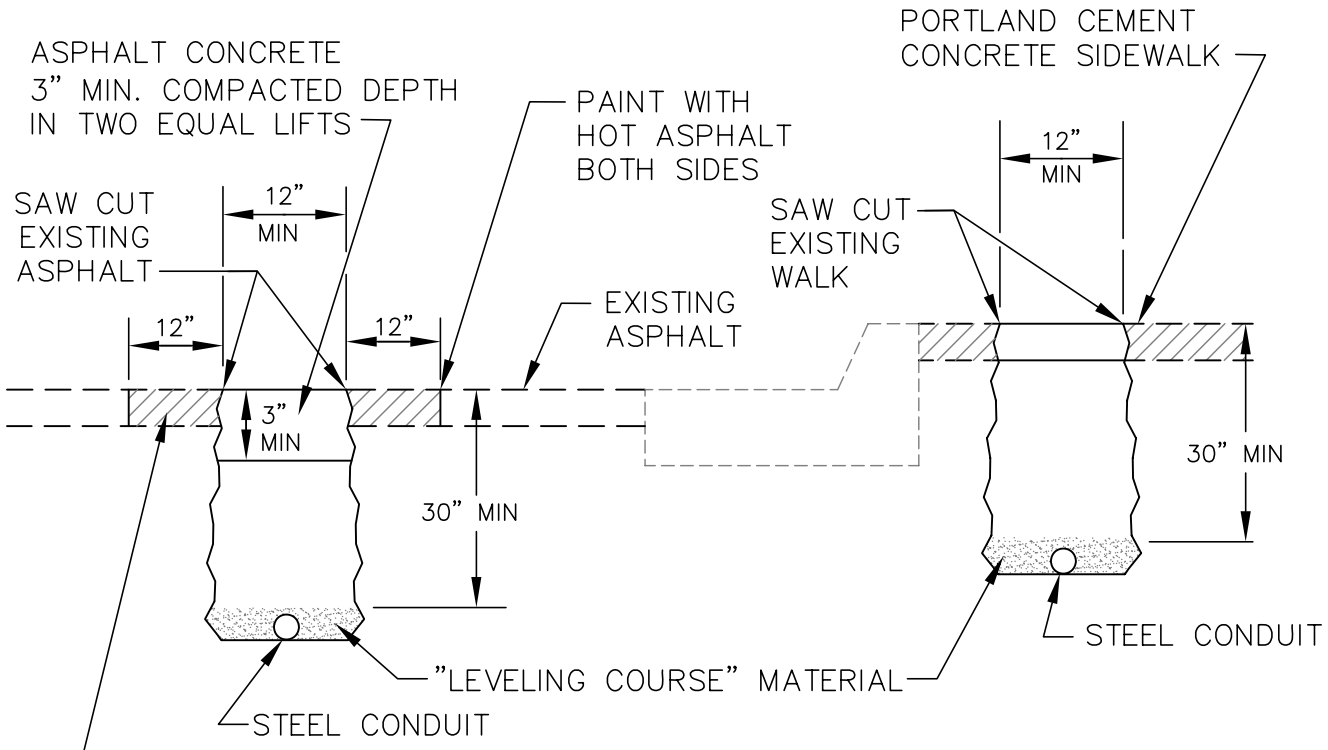

AFTER TRENCH BACKFILL HAS BEEN COMPACTED AN ADDITIONAL 12" OF ASPHALT WILL BE REMOVED FROM EACH EDGE OF THE ORIGINAL CUT. THE ENGINEER MAY REQUIRE MORE THAN A 12" ADDITIONAL CUT IF THE EXISTING PAVEMENT HAS BEEN LIFTED IN THE REMOVAL PROCESS OR IF THE JOINT DOES NOT OCCUR ON UNDISTURBED MATERIAL.

MUNICIPALITY OF ANCHORAGE	SCALE: NTS APPROVED: REVISED: 10/07	**SAW CUT TRENCH**	SECTION # 80.02 DETAIL # 80–1

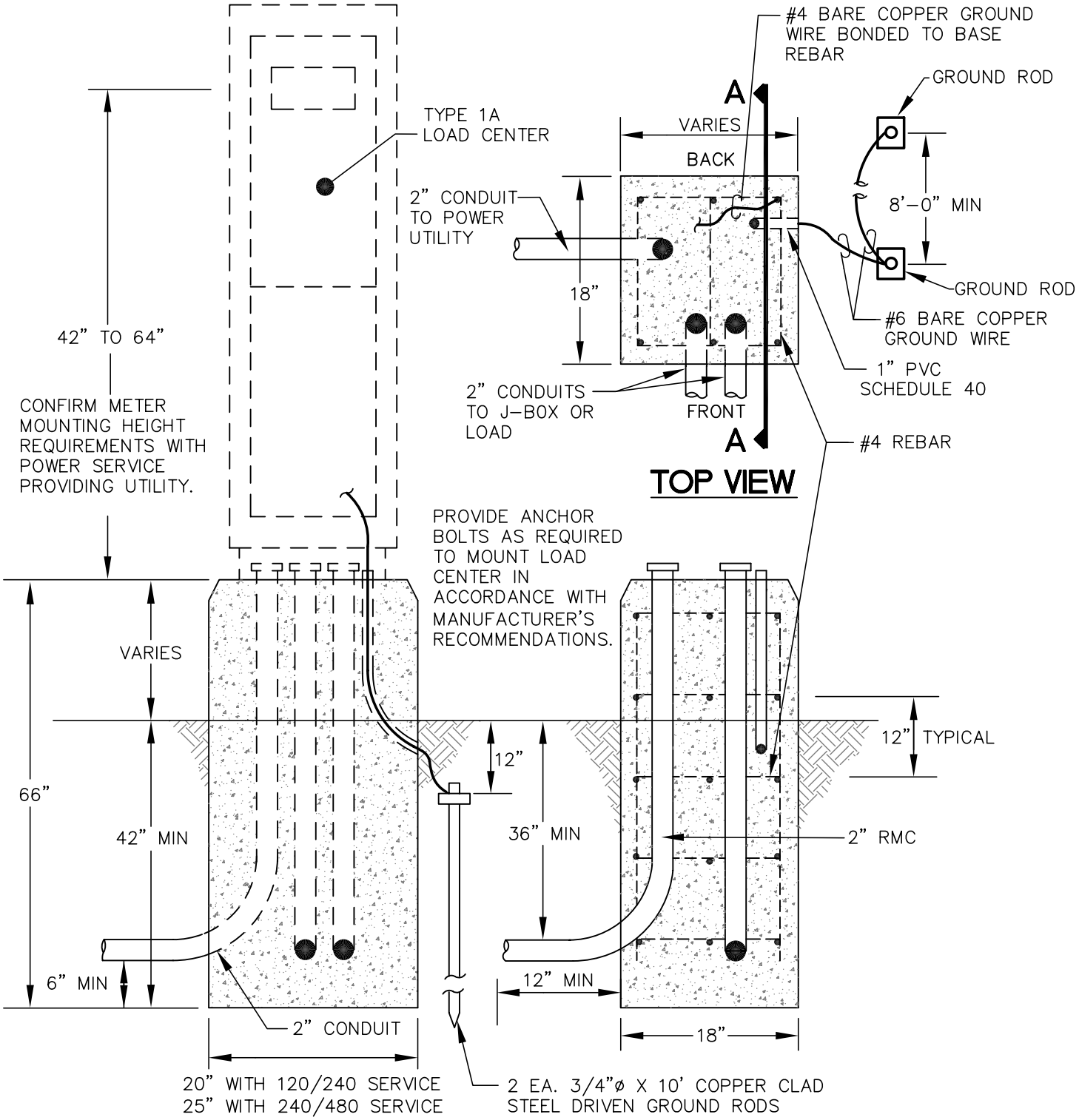

NOTES:

1. ORIENTATION OF CONDUIT SWEEPS IS REPRESENTATIVE. CONTRACTOR SHALL COORDINATE CONDUIT ORIENTATION WITH THE ENGINEER AND UTILITY.
2. PROVIDE NON-FROST SUSCEPTIBLE COMPACTED BACKFILL.
3. INSTALL TYPE 1A OR TYPE 2 JUNCTION BOX ADJACENT TO LOAD CENTER FOUNDATION. JUNCTION BOX SIZE TO BE DETERMINED USING THE LATEST VERSION OF MOA DESIGN CRITERIA MANUAL, CHAPTER 6.

MUNICIPALITY OF ANCHORAGE	SCALE: NTS APPROVED: REVISED: 5/08	CONCRETE FOUNDATION LOAD CENTER TYPE 1A	SECTION # 80.04 DETAIL # 80-2

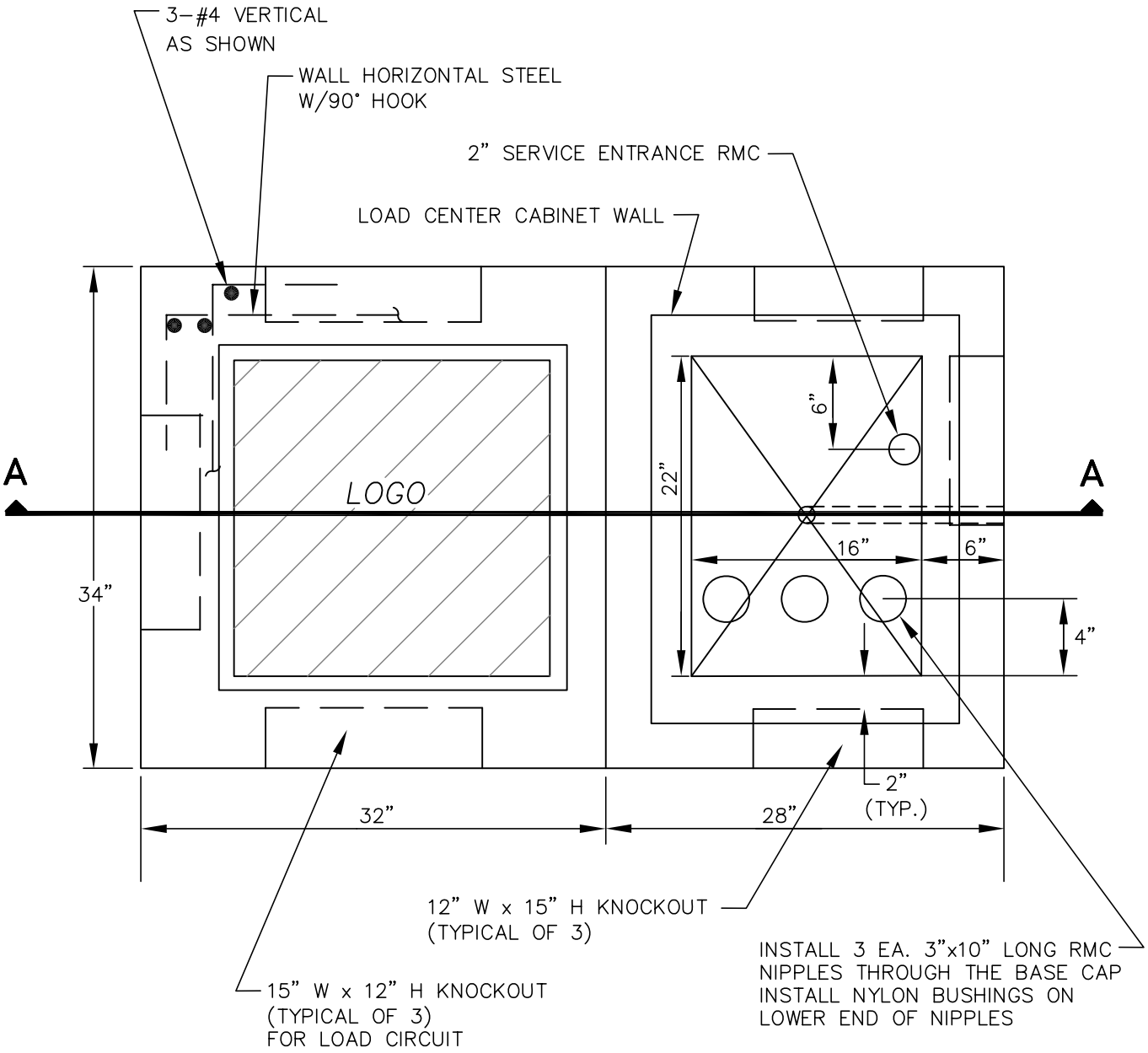

PLAN VIEW

NOTE:

1. SEE DETAIL 80-4 FOR SECTION AA.

MUNICIPALITY OF ANCHORAGE	SCALE: NTS APPROVED: REVISED: 5/08	CONCRETE FOUNDATION LOAD CENTER TYPE 1	SECTION # 80.04 DETAIL # 80-3

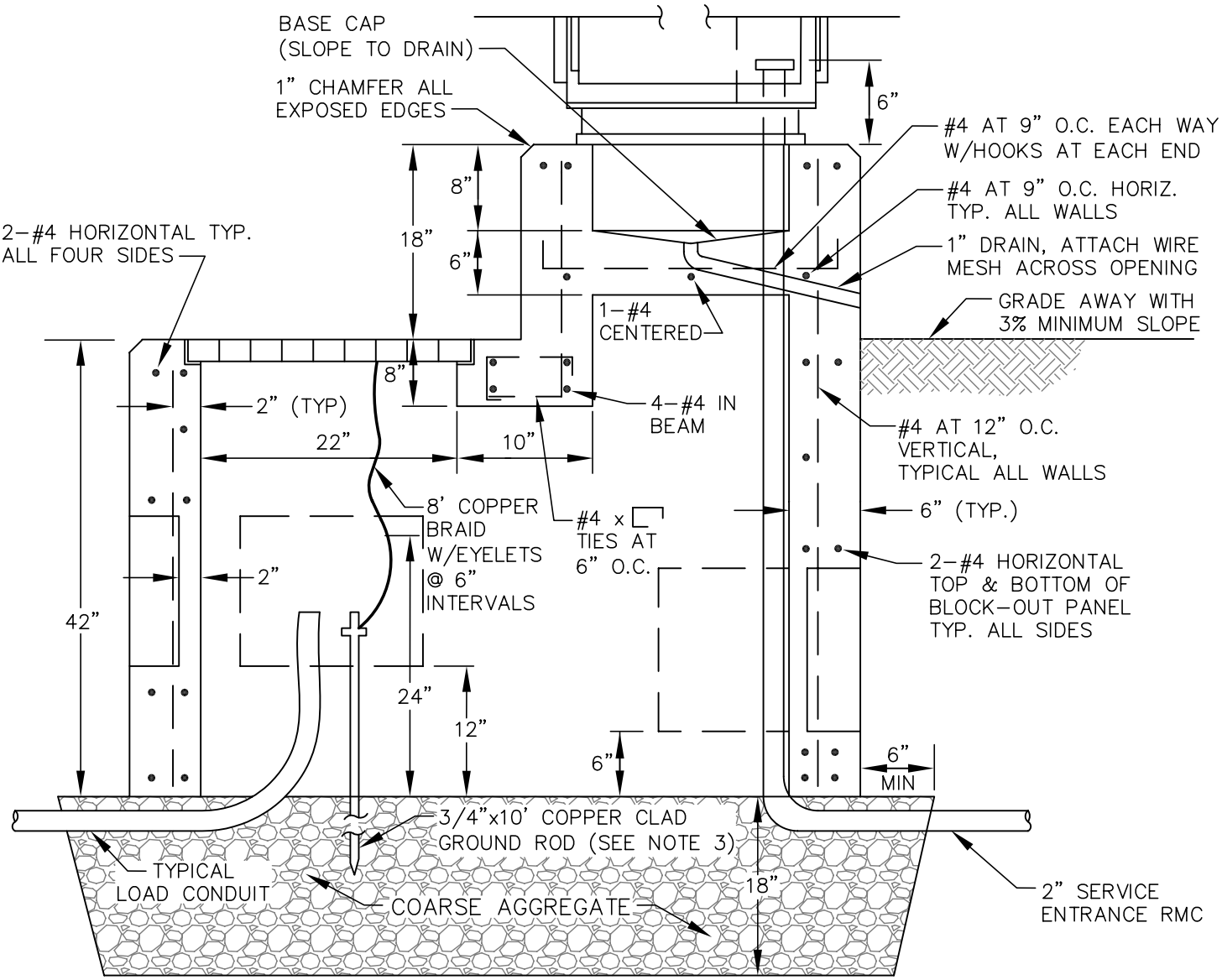

SECTION AA

NOTES:

1. STOP HORIZ. & VERT. STEEL AT BLOCK-OUT PANELS & USE 90 HOOK. USE 2-#4 HORIZ. & VERT. EXTRA BARS ALL SIDES AS SHOWN.
2. SEE STANDARD DETAIL 80-3 FOR PLAN VIEW.
3. ADD SECOND 3/4" x 10' GROUND ROD 8' FROM LOAD CENTER PER NEC.

MUNICIPALITY OF ANCHORAGE	SCALE: NTS APPROVED: REVISED: 5/08	CONCRETE FOUNDATION TYPE 1 LOAD CENTER SECTION AA	SECTION # 80.04 DETAIL # 80-4

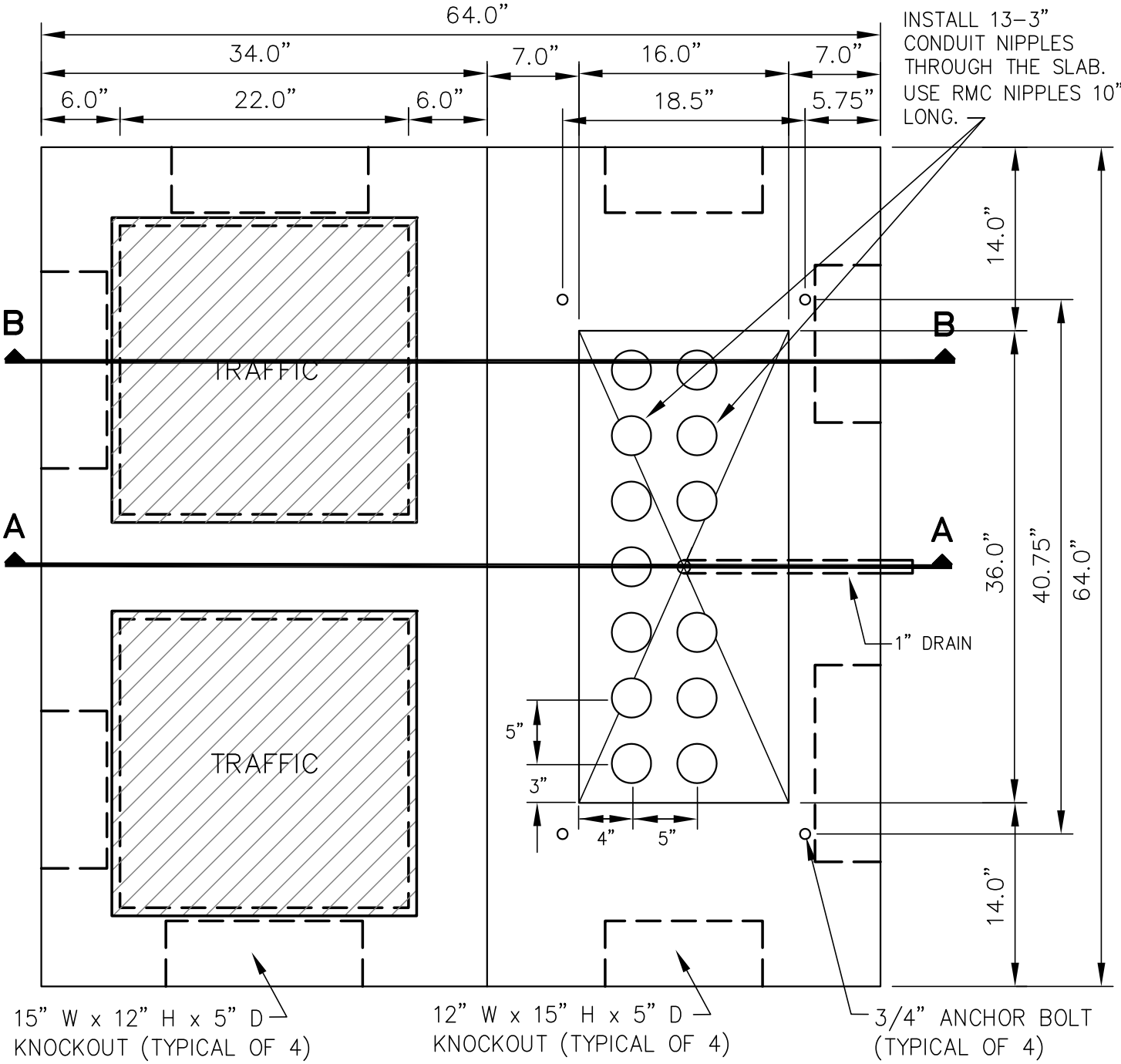

PLAN VIEW

NOTES:

1. SEE STANDARD DETAIL 80-6 FOR SECTION AA
2. SEE STANDARD DETAIL 80-7 FOR SECTION BB.
3. ANCHOR BOLTS SHALL NOT PROTRUDE MORE THAN 1.5" ABOVE THE TOP OF THE FOUNDATION. CONTRACTOR SHALL USE ANCHOR BOLT DIMENSIONS SPECIFIED BY THE CABINET MANUFACTURER.
4. SEAL UNUSED CONDUIT STUBS WITH WATERTIGHT CAPS. SEAL STUBS CARRYING CONDUCTORS WITH WATERTIGHT SEALING BUSHINGS DESIGNED TO SEAL AROUND CONDUCTORS AND AGAINST THE CONDUIT WALLS.
5. INSTALL TRAFFIC CONTROLLER WITHIN 1-DEGREE OF PLUMB.

MUNICIPALITY OF ANCHORAGE	SCALE: NTS APPROVED: REVISED: 5/2011	TS2 CONTROLLER CONCRETE CABINET FOUNDATION	SECTION # 80.04 DETAIL # 80-5

REVISION: 5/2011 CHANGED TO TS2 CONTROLLER CABINET

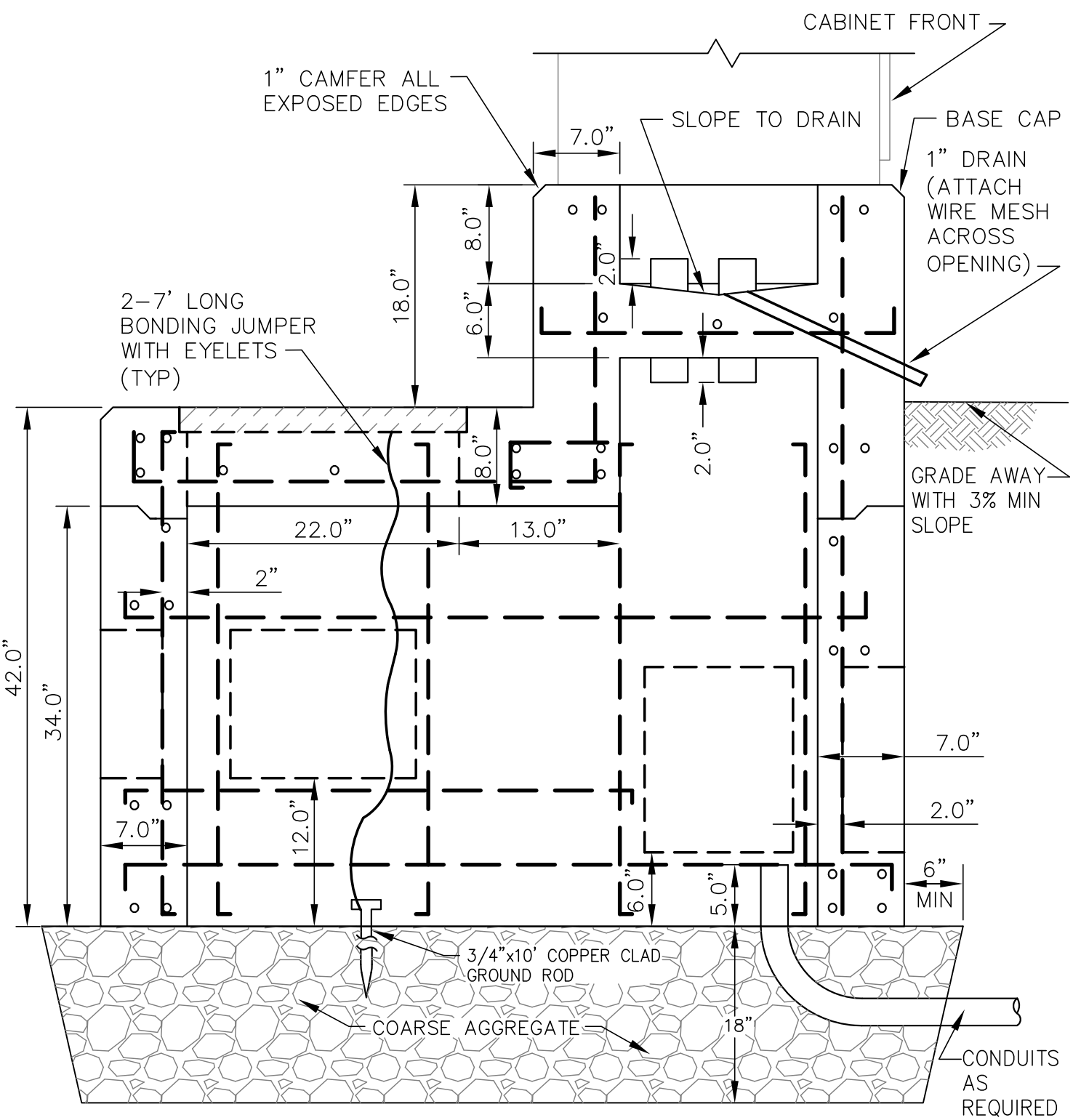

SECTION AA

NOTE:

1. SEE STANDARD DETAIL 80-7, SECTION BB, FOR REBAR DETAILS.

MUNICIPALITY OF ANCHORAGE	SCALE: NTS APPROVED: REVISED: 5/2011	CONCRETE FOUNDATION TS2 CONTROLLER SECTION AA	SECTION # 80.04 DETAIL # 80-6

REVISION: 5/2011 CHANGED TO TS2 CONTROLLER CABINET

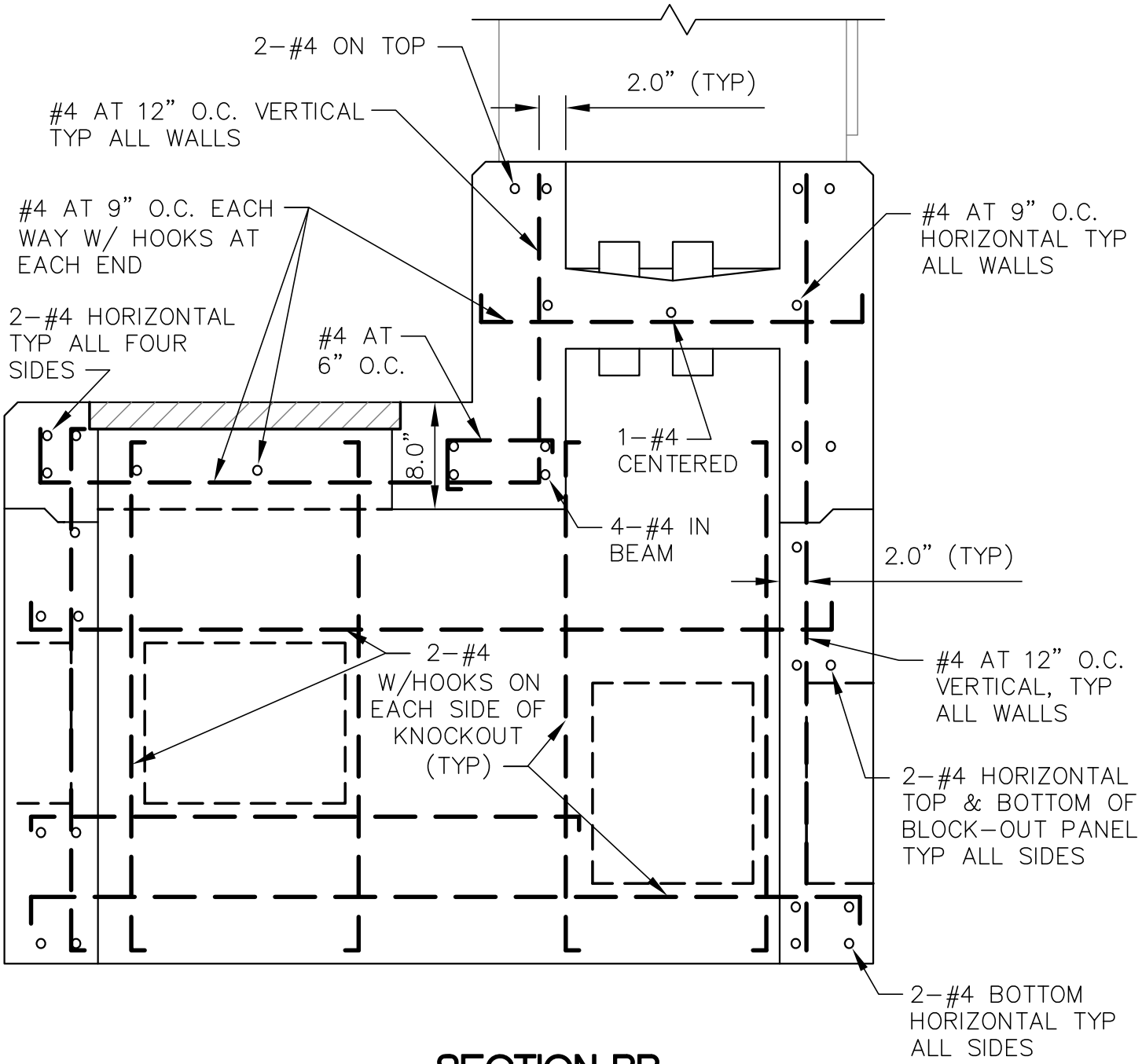

SECTION BB

NOTE:

STOP HORIZONTAL & VERTICAL STEEL AT THE BLOCK-OUT PANELS & THE JOINT USING 90 DEGREE HOOKS. USE 2 EXTRA #4 HORIZONTAL & VERTICAL BARS ALL SIDES AS SHOWN.

REVISION: 5/2011 CHANGED TO TS2 CONTROLLER CABINET

MUNICIPALITY OF ANCHORAGE	SCALE: NTS APPROVED: REVISED: 5/2011	CONCRETE FOUNDATION TS2 CONTROLLER SECTION BB	SECTION # 80.04 DETAIL # 80-7

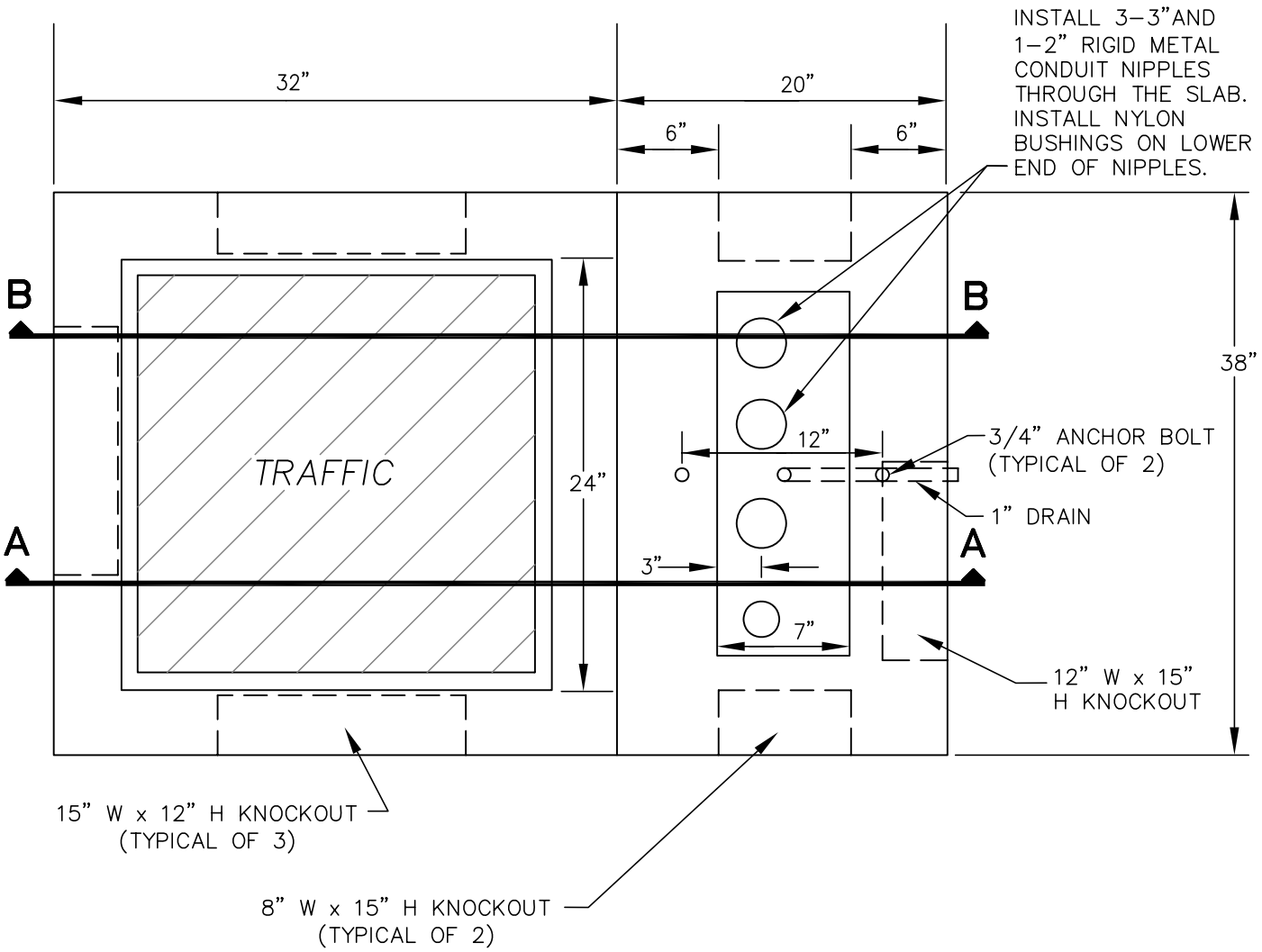

PLAN VIEW

NOTES:

1. SEE DETAIL 80–6 FOR SECTION AA.
2. SEE DETAIL 80–7 FOR SECTION BB.
3. ANCHOR BOLTS SHALL NOT PROTRUDE MORE THAN 1–1/2" ABOVE THE TOP OF THE FOUNDATION. USE CABINET MANUFACTURER SPECIFIED ANCHOR BOLT DIMENSIONS.
4. SEAL UNUSED CONDUIT STUBS WITH WATERTIGHT CAPS.

MUNICIPALITY OF ANCHORAGE	SCALE: NTS APPROVED: REVISED: 5/08	VAULT TYPE "M" CONTROLLER CABINET FOUNDATION	SECTION # 80.04 DETAIL # 80–8

NOTES:

1. CONNECT NO. 4 GROUND WIRE TO ONE OF THE TOP SPIRALS WITH TWO IRREVERSIBLE, HYDRAULICALLY SWAGED CONNECTORS AS SHOWN. GROUND WIRE SHALL BE BARE SOLID, STRANDED, OR BRAIDED COPPER. PROTECT GROUND WIRE WITH CONDUIT AS SHOWN AND FILL CONDUIT WITH SILICON SEALANT. ALLOW 1" OF THE SLEEVE AND 24" OF CONDUCTOR TO PROTRUDE FROM THE FOUNDATIONS.
2. THIS FOUNDATION IS APPROVED FOR APPLICATIONS IN COHESIONLESS SOILS WITH AN N1-60 VALUE OF 10 OR GREATER PER AASHTO T-206, "STANDARD PENETRATION TEST" (SPT). THIS FOUNDATION SHALL NOT BE USED IF ANY OF THE FOLLOWING ARE ENCOUNTERED; WATER TABLE ABOVE THE BOTTOM OF FOUNDATION, VERY LOOSE SOILS, ORGANIC SOILS OR, COHESIVE SOILS (CLAY), OR SOILS SUSCEPTIBLE TO FROST JACKING. IF ANY OF THESE CONDITIONS ARE ENCOUNTERED, STOP FOUNDATION WORK AND CONTACT THE ENGINEER.

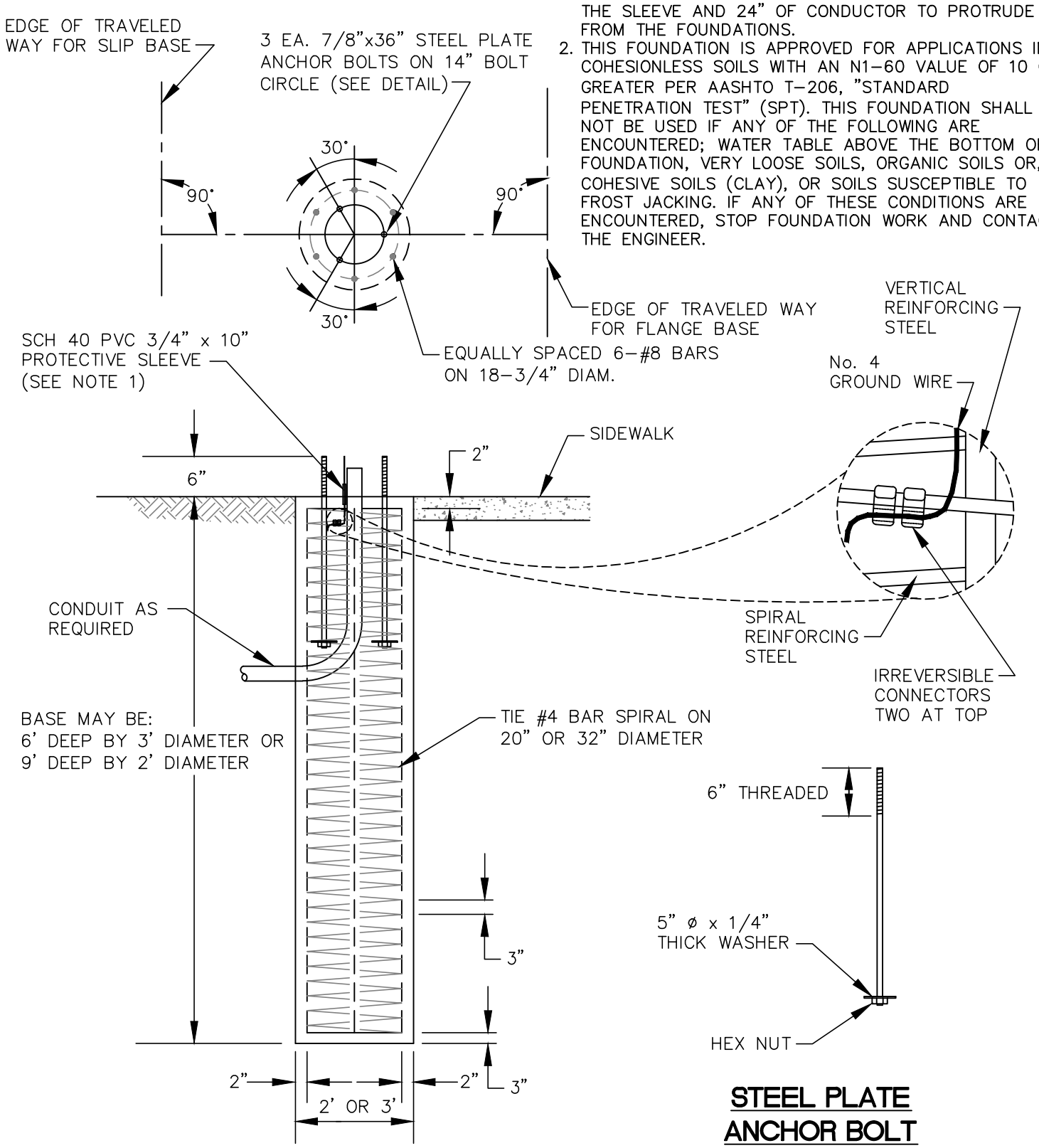

STEEL PLATE ANCHOR BOLT

MUNICIPALITY OF ANCHORAGE	SCALE: NTS APPROVED: REVISED: 11/14	POURED CONCRETE LUMINAIRE POLE FOUNDATION	SECTION # 80.04 DETAIL # 80-9

REVISION: 12/09 FIXED REBAR REFERENCE FOR SPIRAL; 3/13 ADDED GROUNDING DETAIL; 11/14 ADDED NOTE 2

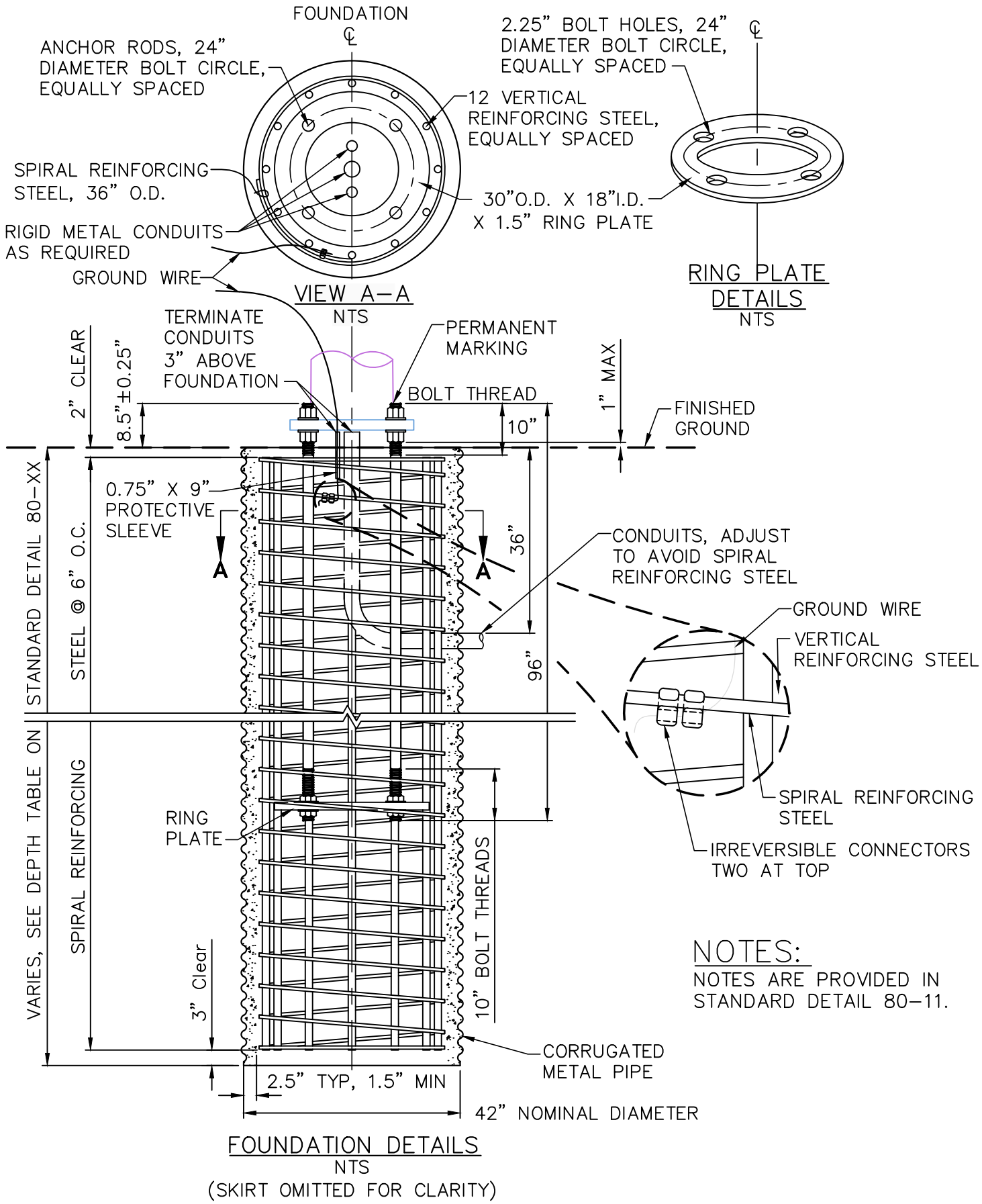

NOTES:

NOTES ARE PROVIDED IN STANDARD DETAIL 80–11.

REVISION: 11/14 DELETED OLD DETAIL, ALL NEW DRAWING

MUNICIPALITY OF ANCHORAGE	SCALE: NTS APPROVED: REVISED: 11/14	SIGNAL POLE FOUNDATION DETAILS CONCRETE 42' DIAMETER	SECTION # 80.05 DETAIL # 80–10

NOTES:

1. THIS FOUNDATION IS APPROVED FOR TRAFFIC SIGNAL APPLICATIONS IN COHESIONLESS SOILS WITH AN N1-60 VALUE OF 10 OR GREATER PER AASHTO T-206, "STANDARD PENETRATION TEST" (SPT). THIS FOUNDATION SHALL NOT BE USED IF ANY OF THE FOLLOWING ARE ENCOUNTERED; WATER TABLE ABOVE THE BOTTOM OF FOUNDATION, VERY LOOSE SOILS, ORGANIC SOILS OR, COHESIVE SOILS (CLAY), OR SOILS SUSCEPTIBLE TO FROST JACKING. IF ANY OF THESE CONDITIONS ARE ENCOUNTERED, STOP FOUNDATION WORK AND CONTACT THE ENGINEER.

2. PLACE FOUNDATION IN DRILLED OR EXCAVATED HOLE WITH CENTERLINE OF FOUNDATION LOCATED AT THE STATION, OFFSET, AND ELEVATION SPECIFIED IN PLANS. SET FOUNDATION FLUSH WITH SURROUNDING SURFACE. GRADE TO DRAIN AWAY FROM FOUNDATION WITHOUT EXPOSING MORE THAN 4" OF THE FOUNDATION FROM THE SURROUNDING GROUND SURFACE.

3. FORM THE FOUNDATION IN CORRUGATED METAL PIPE CONFORMING TO M.A.S.S DIVISION 80, SECTION 80.04, ARTICLE 4.2 - CAST-IN-PLACE CONCRETE FOUNDATIONS.

4. PROVIDE 1.5 EXTRA TURNS AT EACH END OF THE SPIRAL REINFORCING STEEL. REINFORCING STEEL SHALL NOT BE SPLICED. TIE VERTICAL REINFORCING STEEL TO EACH INTERSECTION OF THE SPIRAL REINFORCING STEEL.

5. CONNECT GROUND WIRE NEAR THE TOP SPIRAL REINFORCING STEEL WITH TWO IRREVERSIBLE CONNECTORS AS SHOWN. FASTEN CONNECTORS ACCORDING TO THE MANUFACTURERS' RECOMMENDATIONS INCLUDING THE USE OF MANUFACTURER SPECIFIED TOOLS. THE GROUND WIRE MAY BE BARE SOLID, STRANDED, OR BRAIDED COPPER. PROTECT GROUND WIRE WITH PROTECTIVE SLEEVE AS SHOWN AND FILL WITH SILICON SEALANT.

6. THE RING PLATE MAY BE "BUILT UP" OF MULTIPLE STEEL PLATES. THE MINIMUM THICKNESS FOR ANY ONE PLATE IS 0.5 INCHES. FASTEN THE RING PLATE TO ANCHOR RODS WITH NUTS AND WASHERS ON BOTH SIDES OF RING PLATE AS SHOWN. TORQUE RING PLATE NUTS TO 600 FT-LBS.

7. ANCHOR RODS ARE SUBJECT TO CHARPY V-NOTCH IMPACT TESTING. SUBMIT MILL CERTIFICATIONS FOR ANCHOR RODS, NUTS AND WASHERS. GALVANIZE ANCHOR RODS FULL LENGTH. PROVIDE PERMANENT MANUFACTURER'S IDENTIFICATION AND PERMANENT GRADE IDENTIFICATION ON EACH END OF ANCHOR ROD BY STEEL DIE STAMP. SECURE EXPOSED ANCHOR RODS WITH A "RING PLATE" WHEN NOT IN SERVICE. INSTALL ANCHOR RODS PLUMB. ANCHOR RODS GREATER THAN 1:40 OUT-OF-PLUMB WILL RESULT IN FOUNDATION REJECTION.

8. COMPLETE ALL CONCRETE WORK IN CONFORMANCE WITH M.A.S.S. DIVISIONS 30 - CONCRETE AND 80 - TRAFFIC SIGNALS AND ILLUMINATION. USE A TUBE WITH A HOPPER HEAD OR OTHER APPROVED DEVICE WHEN DROPPING CONCRETE MORE THAN 5 FEET. VIBRATE CONCRETE DURING PLACEMENT BY MECHANICAL VIBRATION. ENSURE UPPER ANCHOR ROD THREADS ARE PROTECTED FROM CONTACT WITH CONCRETE DURING POUR.

9. BACKFILL AND COMPACT ACCORDING TO M.A.S.S. DIVISION 20 - EARTHWORK AND DIVISION 80, SECTION 80.04, ARTICLE 4.2 - CAST-IN-PLACE CONCRETE FOUNDATIONS. USE CLASSIFIED FILL & BACKFILL, TYPE II OR TYPE II-A. ENSURE AREA BELOW FOUNDATION MEETS COMPACTION REQUIREMENTS AND IS FREE OF LOOSE MATERIAL AND DEBRIS PRIOR TO CONCRETE WORK.

DEPTH TABLE		
MASTARM(S) LENGTH (FT)	FOUNDATION DEPTH BY APPLICATION (FT)	
	SINGLE MASTARM	DOUBLE MASTARM
L <= 40	10	13
40 <= L <= 50	11	14
55 <= L <= 65	12	15

REVISION: 11/14 DELETED OLD DETAIL, ALL NEW DRAWING

MUNICIPALITY OF ANCHORAGE

SCALE: NTS

APPROVED:

REVISED: 11/14

SIGNAL POLE FOUNDATION NOTES CONCRETE 42" DIAMETER

SECTION # 80.05

DETAIL # 80-11

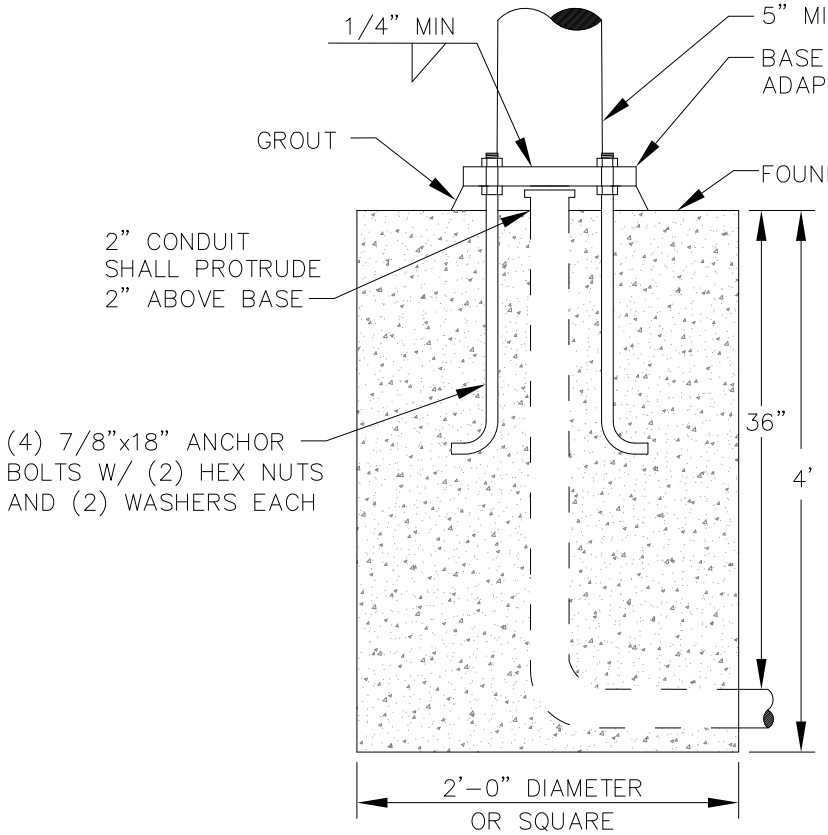

10' PEDESTAL SIGNAL POLE FOUNDATION

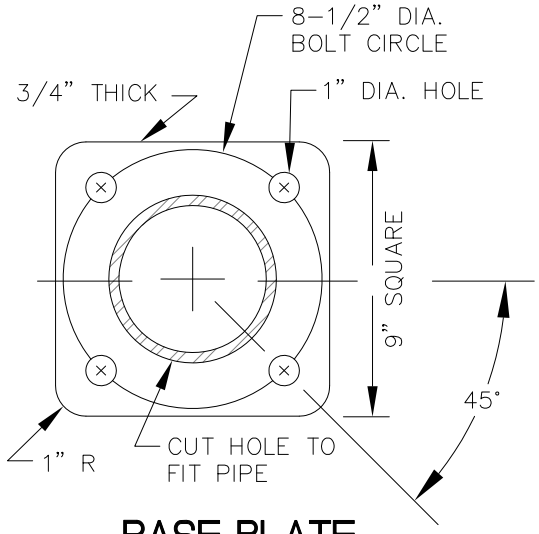

BASE PLATE PLAN VIEW

(BOTH FOUNDATION TYPES)

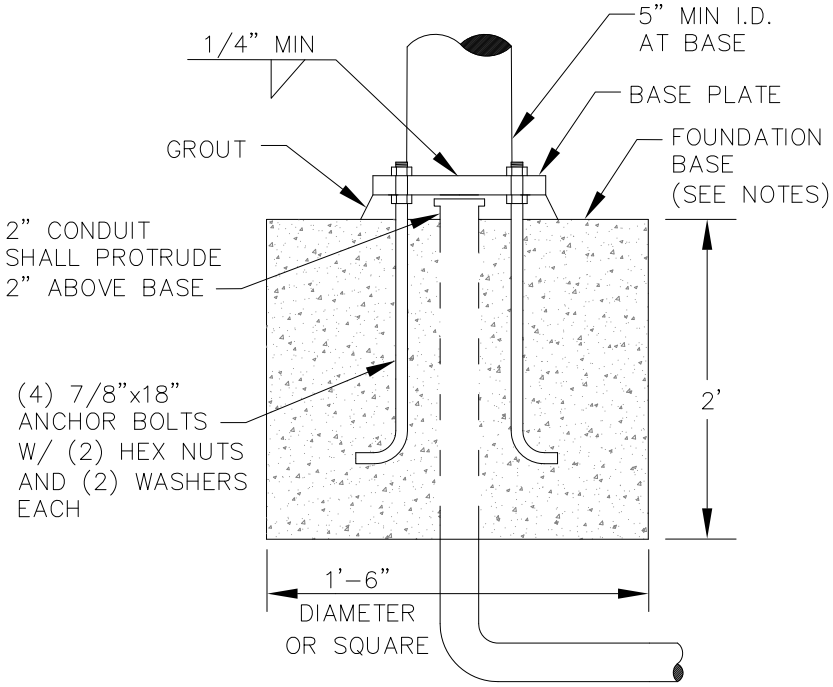

5' PEDESTRIAN PUSH BUTTON FOUNDATION

NOTES:

1. FOUNDATION BASE SHALL HAVE A BROOMED FINISH.
2. REFERENCE TOP BACK OF CURB IN ESTABLISHING FOUNDATION TOP ELEVATION. SET TOP OF FOUNDATION FLUSH WITH SIDEWALK/PAVING FINISH GRADE OR 2"-4" ABOVE FINISH GROUND ELEVATION.
3. IN FOUNDATIONS THAT LACK REINFORCING STEEL CAGES, INSTALL 21 FEET OF COILED #4 AWG, BARE, COPPER WIRE AS THE GROUNDING ELECTRODE. ROUTE THE CONDUCTOR TO PROTRUDE NEAR THE TOP, CENTER OF THE FOUNDATIONS. SLIDE A MINIMUM 6" LONG, PVC OR HDPE, PROTECTIVE SLEEVE OVER THE CONDUCTOR. ALLOW 1" OF THE SLEEVE AND 24" OF CONDUCTOR TO PROTRUDE FROM THE FOUNDATIONS.

MUNICIPALITY OF ANCHORAGE	SCALE: NTS APPROVED: REVISED: 1/13	CONCRETE FOUNDATIONS FOR SIGNAL PEDESTAL POLE AND PEDESTRIAN PUSH BUTTON POLE	SECTION # 80.04, 80.05 DETAIL # 80-12

REVISION: 1/13 ADDED NOTE 3 & UPDATED NOTE REFERENCES

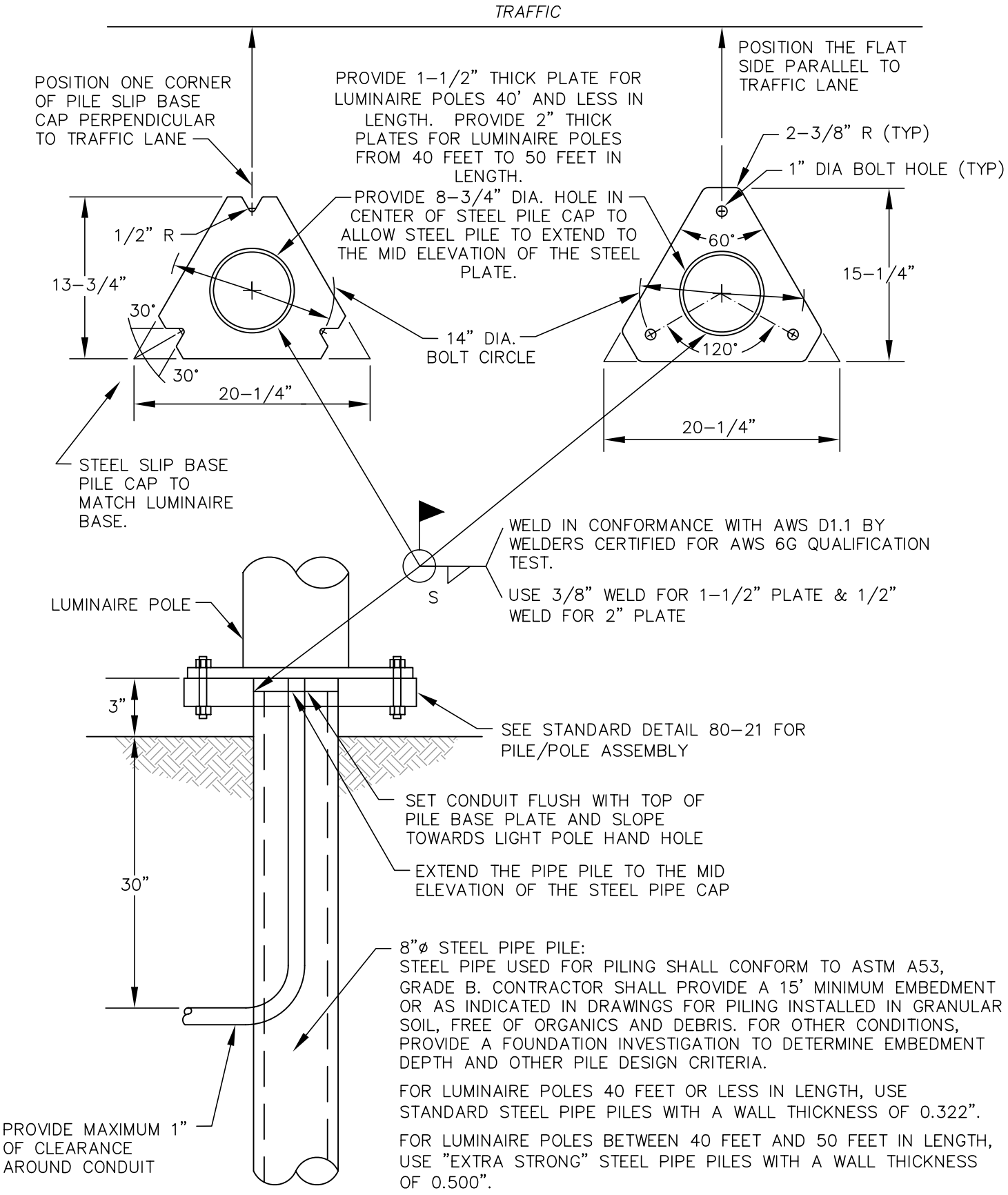

MUNICIPALITY OF ANCHORAGE	SCALE: NTS APPROVED: REVISED: 12/09	DRIVEN STEEL PILE LIGHT POLE FOUNDATION	SECTION # 80.04 DETAIL # 80-13

REVISION: 12/09 ADDED FIXED BASE SPECIFICATIONS

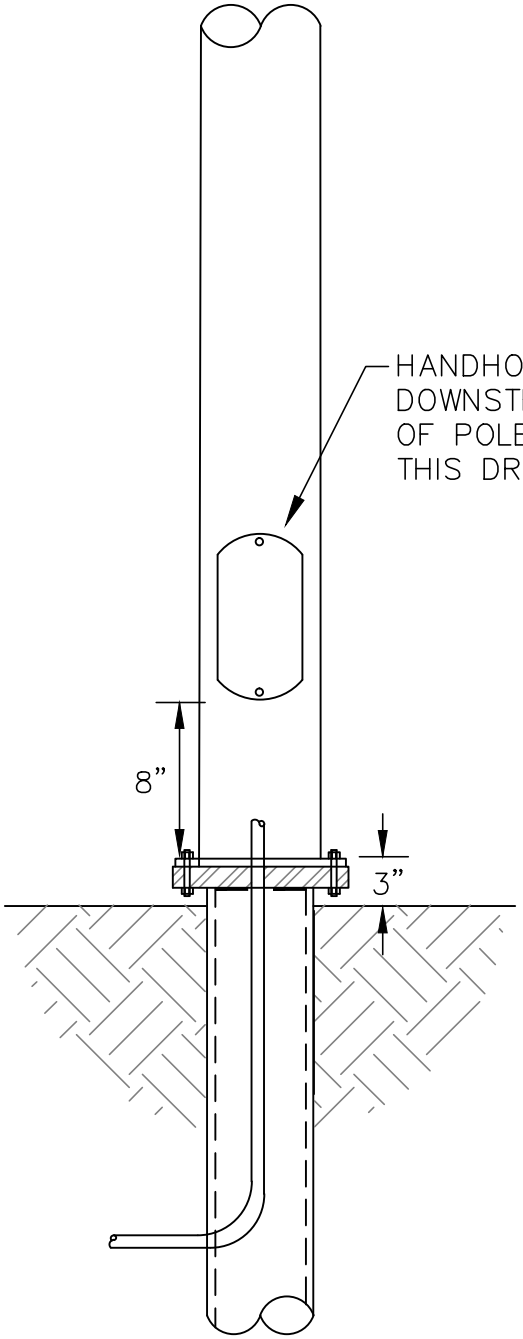

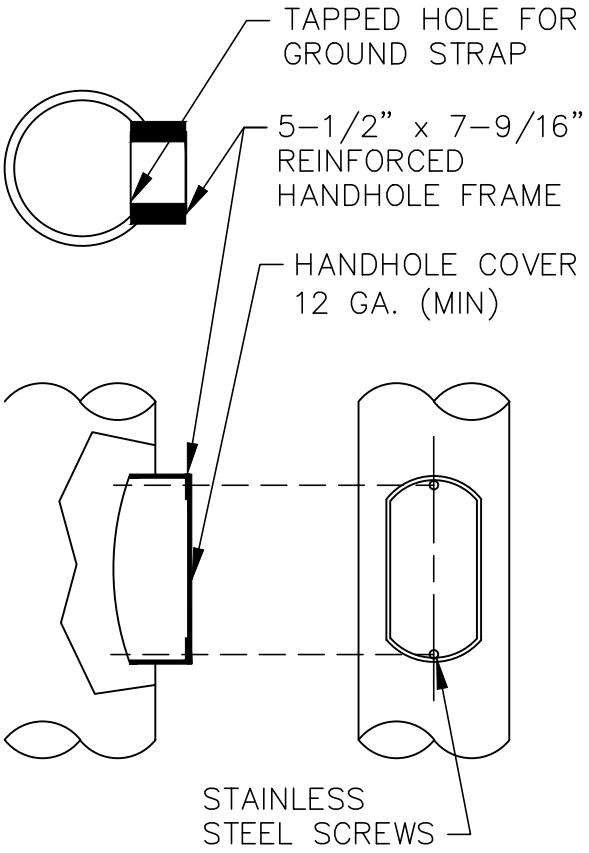

DETAIL A

REVISION: 11/14 DELETED DRIVEN PILE SIGNAL POLE FOUNDATION ADDED LUMINAIRE HAND HOLD DETAILS FROM 80-18

MUNICIPALITY OF ANCHORAGE	SCALE: NTS APPROVED: REVISED: 11/14	**LUMINAIRE POLE HANDHOLD DETAILS**	SECTION # 80.04 DETAIL # 80-14

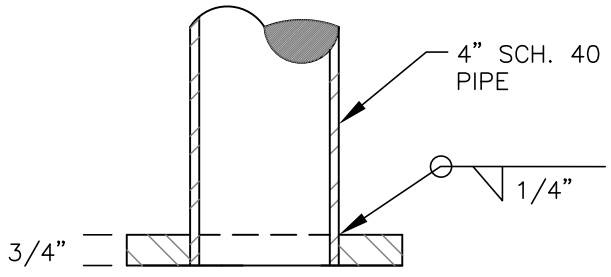

BASE PLATE DETAILS

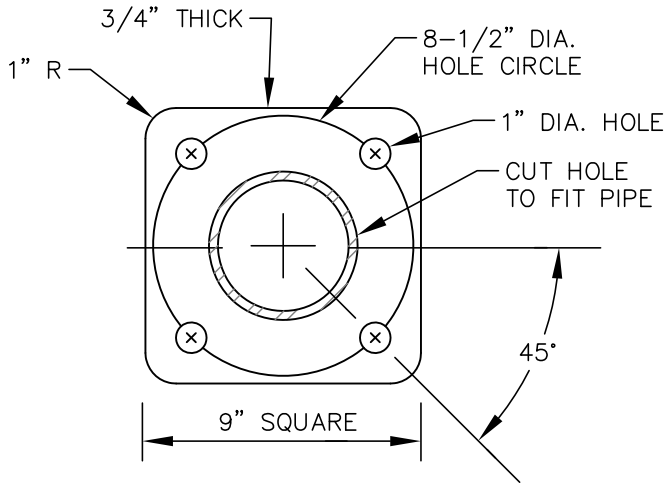

PLAN VIEW

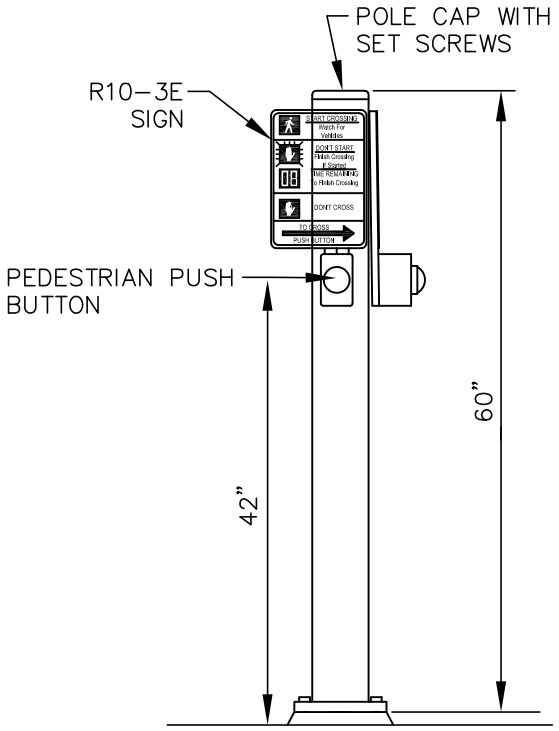

POLE DETAIL

NOTES:

1. SEE DETAIL 80-12 FOR FOUNDATION.
2. SEE DETAIL 80-28 FOR PEDESTRIAN PUSH BUTTON.

REVISION: 2/2012 REMOVED "H" STYLE HOUSING UPDATED POLE DETAIL.

MUNICIPALITY OF ANCHORAGE	SCALE: NTS APPROVED: REVISED: 2/12	PEDESTRIAN PUSH BUTTON POLE	SECTION # 80.05 DETAIL # 80-15

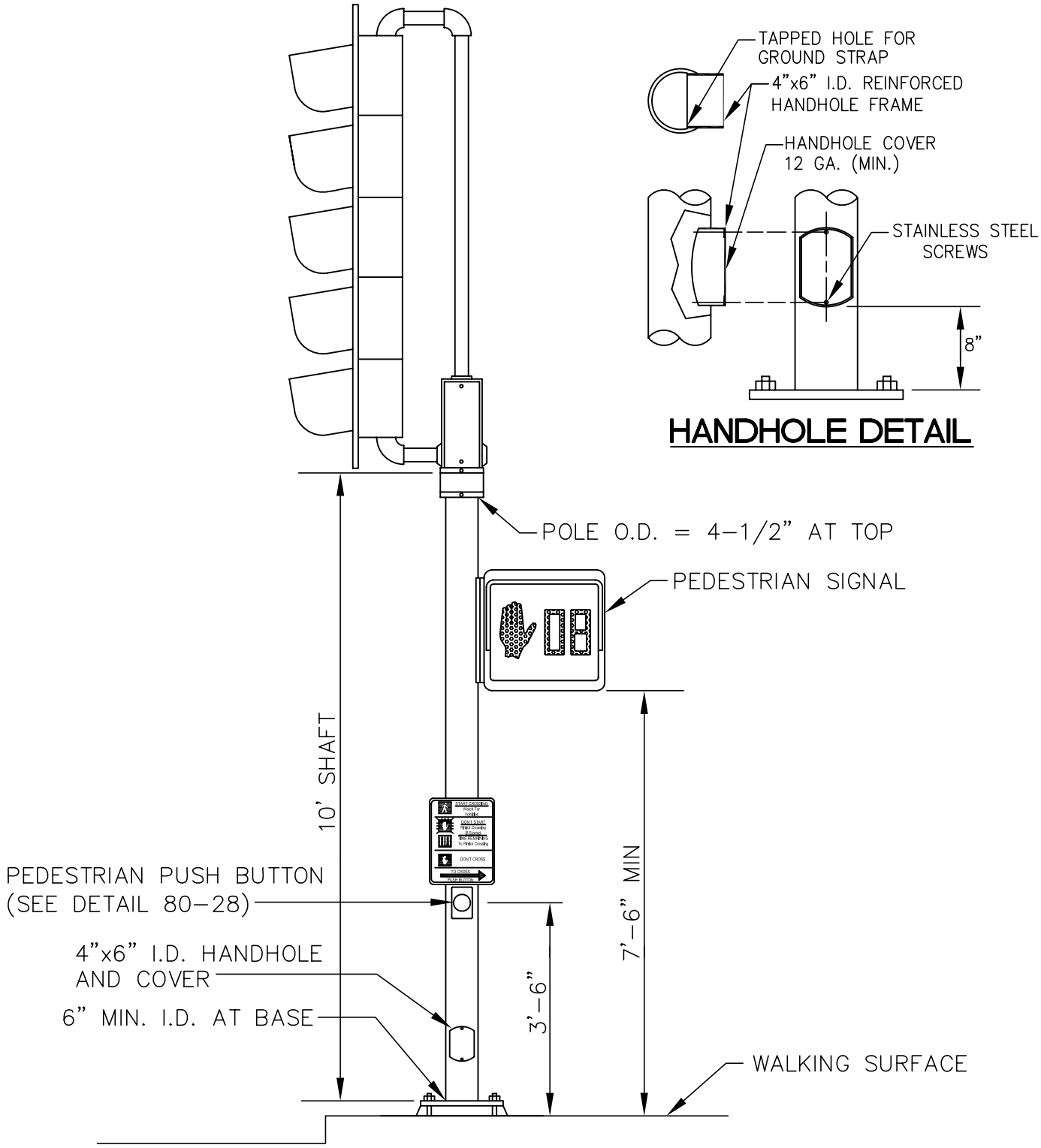

NOTES:

1. SEE DETAIL 80-17 FOR SLIP BASE AND ADAPTER.
2. SEE DETAIL 80-12 FOR FLANGE TYPE BASE PLATE.
3. SEE DETAIL 80-12 FOR CONCRETE FOUNDATION.

MUNICIPALITY OF ANCHORAGE	SCALE: NTS APPROVED: REVISED: 5/08	SIGNAL PEDESTAL POLE	SECTION # 80.05 DETAIL # 80-16

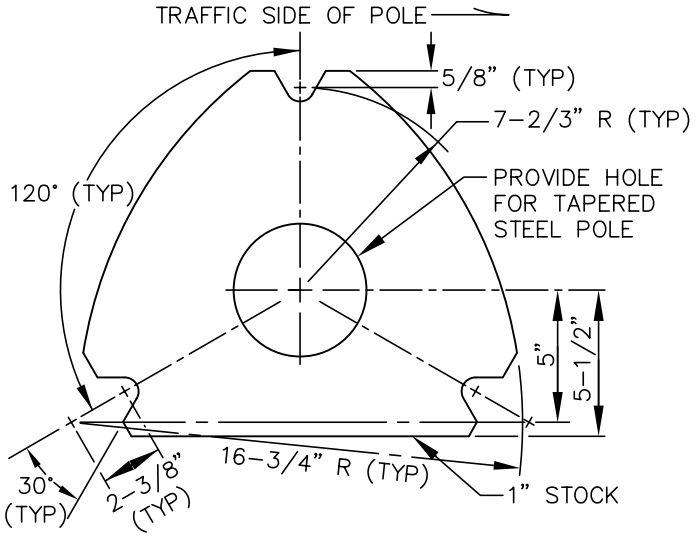

TOP SLIP BASE PLATE

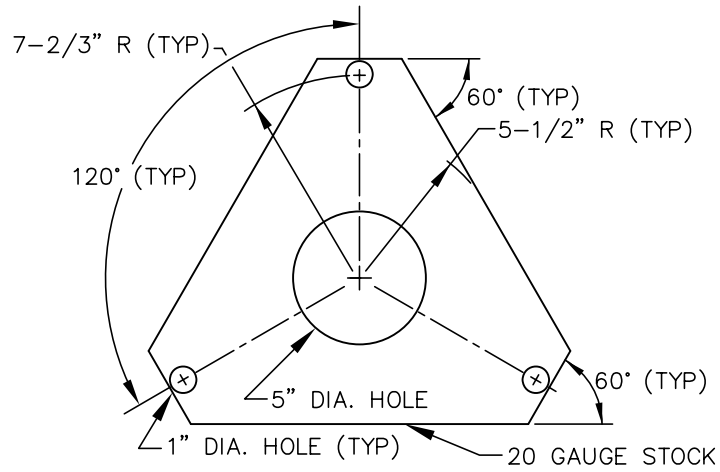

KEEPER PLATE

(SEE DETAIL 80-12 FOR FOUNDATION)

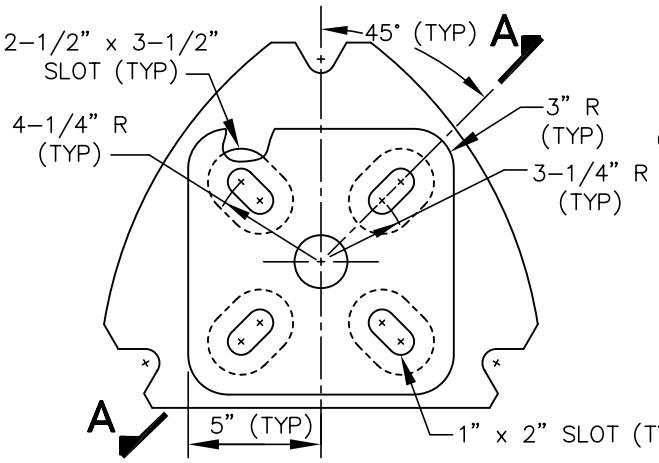

BOTTOM SLIP BASE PLATE

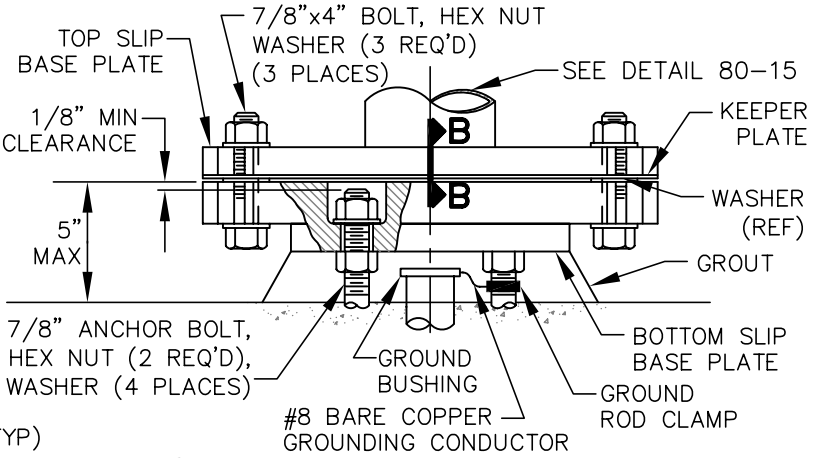

SLIP BASE INSTALLATION

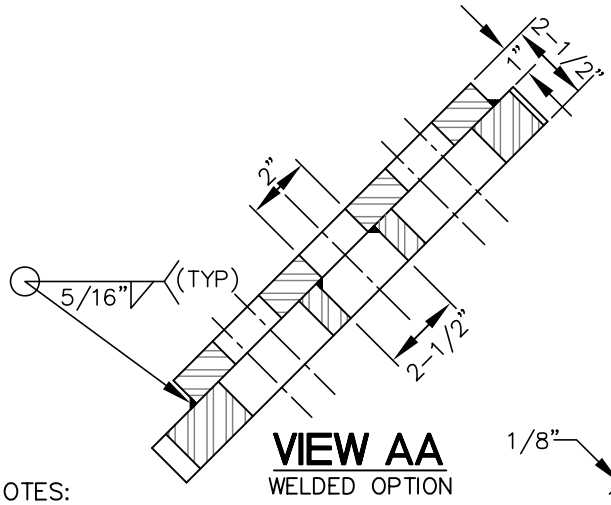

VIEW AA

WELDED OPTION

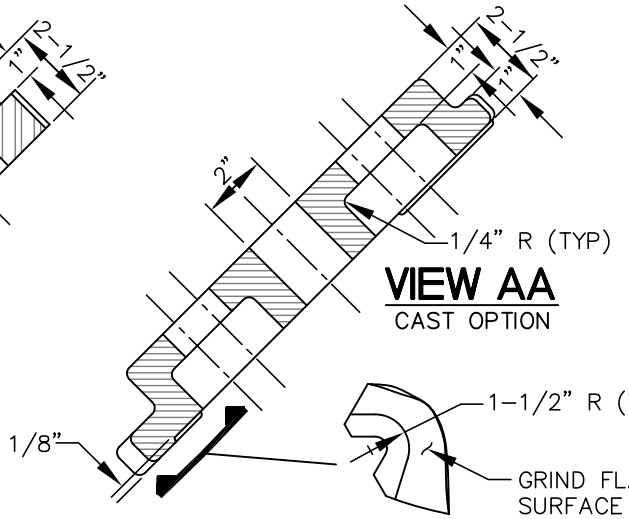

VIEW AA

CAST OPTION

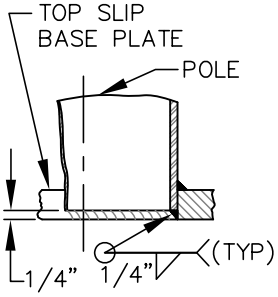

VIEW BB

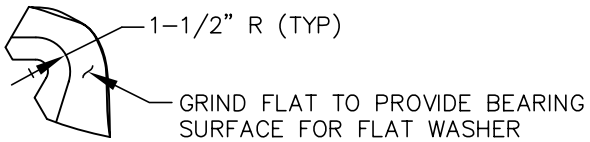

NOTES:

1. TORQUE 7/8" H.S. SLIP BASE PLATE BOLTS TO 800 INCH-LBS.
2. PLATES SHALL CONFORM TO ASTM A36.
3. CAST OPTION SHALL CONFORM TO ASTM A486, CLASS 90.
4. KEEPER PLATE SHALL CONFORM TO ASTM A446, GRADE A.
5. ALL WELDS SHALL CONFORM TO AMERICAN WELDING SOCIETY SPECIFICATIONS.
6. SEE STANDARD DETAIL 80-12 FOR BOLT HOLE CIRCLE PATTERN.

MUNICIPALITY OF ANCHORAGE	SCALE: NTS APPROVED: REVISED: 7/08	PEDESTAL SIGNAL POLE SLIP-BASE AND ADAPTER DETAIL	SECTION # 80.05 DETAIL # 80-17

NOTES:

1. INSTALL JUNCTION BOX BEHIND LIGHT POLE AWAY FROM TRAFFIC OR DOWNSTREAM TRAFFIC SIDE OF THE POLE.
2. PLACE JUNCTION BOXES CONSISTENTLY WITHIN A PROJECT – EITHER ALL BEHIND THE LIGHT POLE OR ALL ON THE DOWNSTREAM TRAFFIC SIDE OF THE POLE.

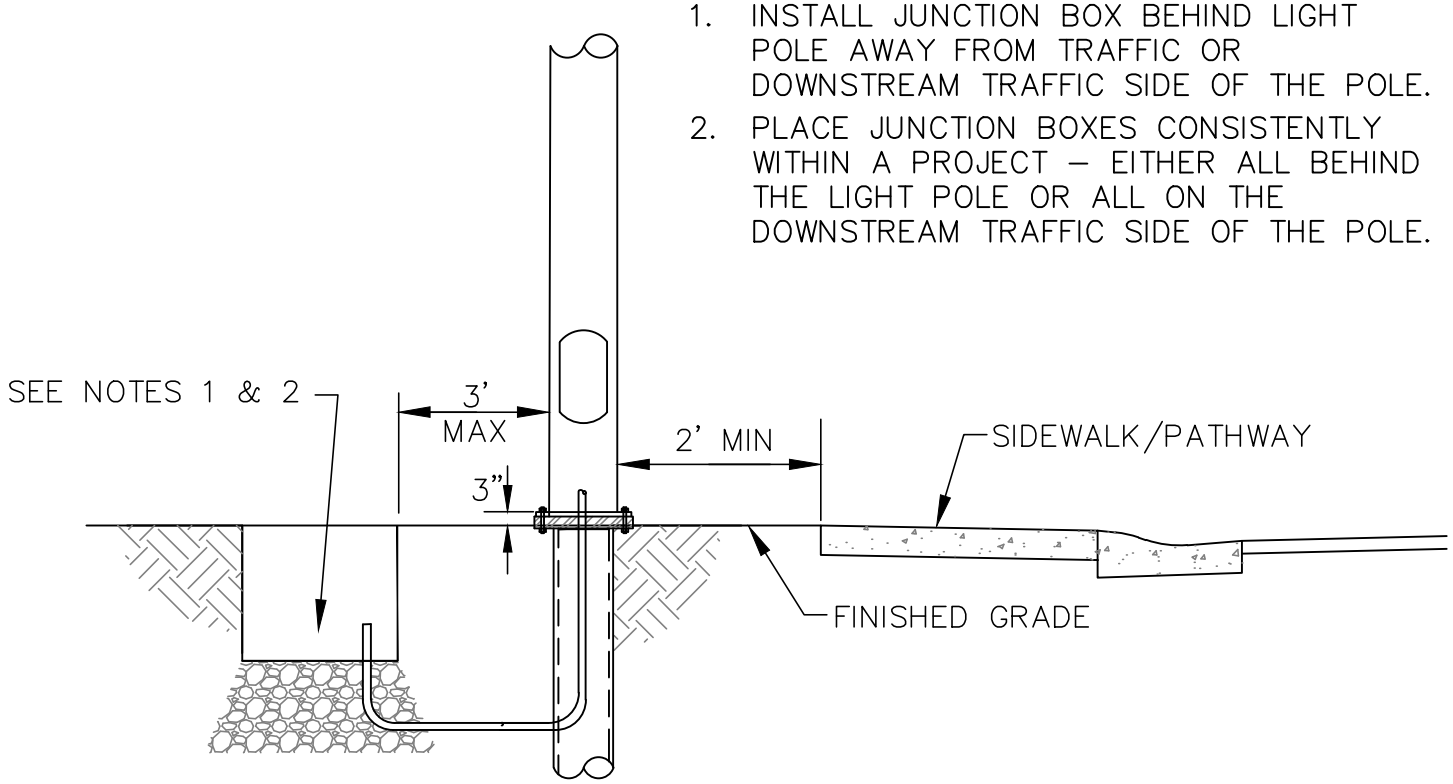

CLEARANCES WITH PEDESTRIAN FACILITIES

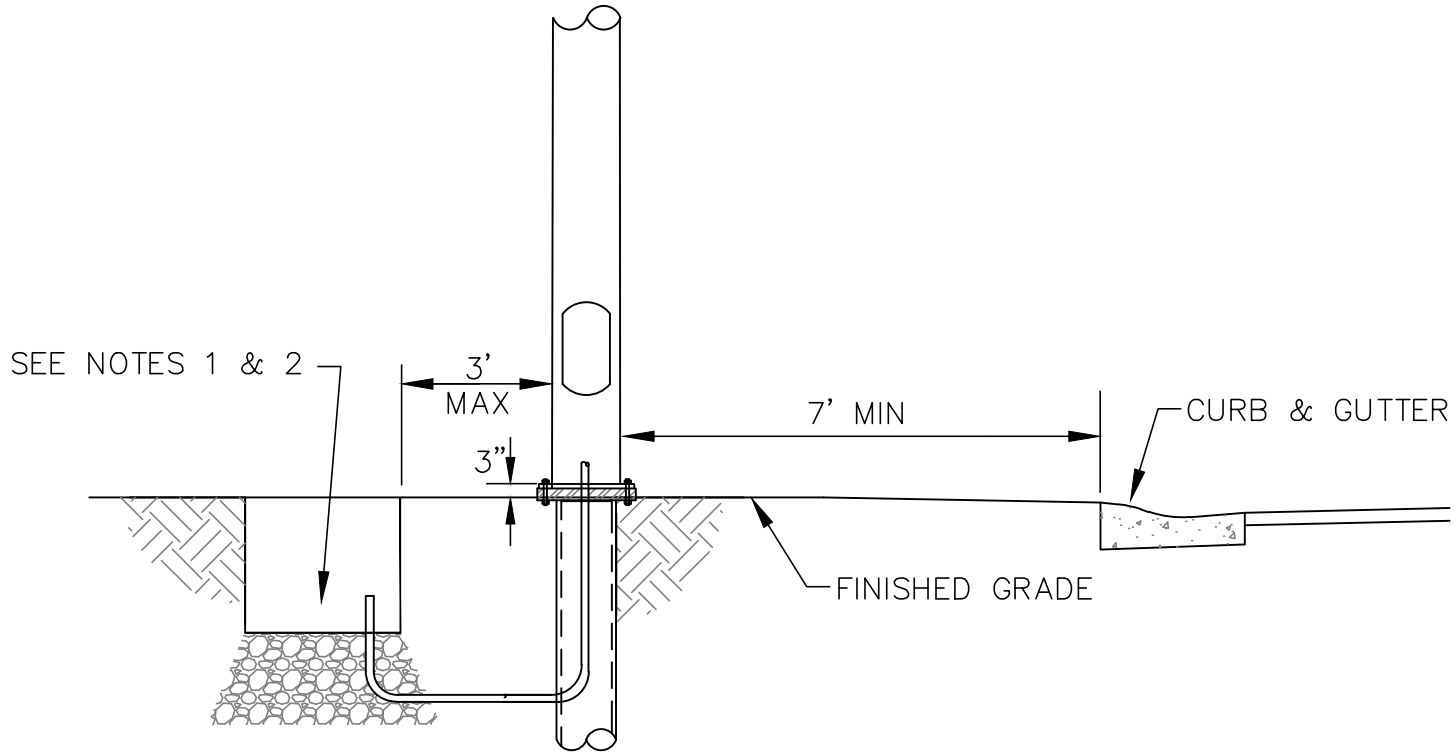

CLEARANCES WITHOUT PEDESTRIAN FACILITIES

REVISION: 11/14 DELETED DIRECT IMBEDDED CHANGED TO CLEARANCES

MUNICIPALITY OF ANCHORAGE	SCALE: NTS APPROVED: REVISED: 11/14	LUMINAIRE CLEARANCES	SECTION # 80.08 DETAIL # 80–18

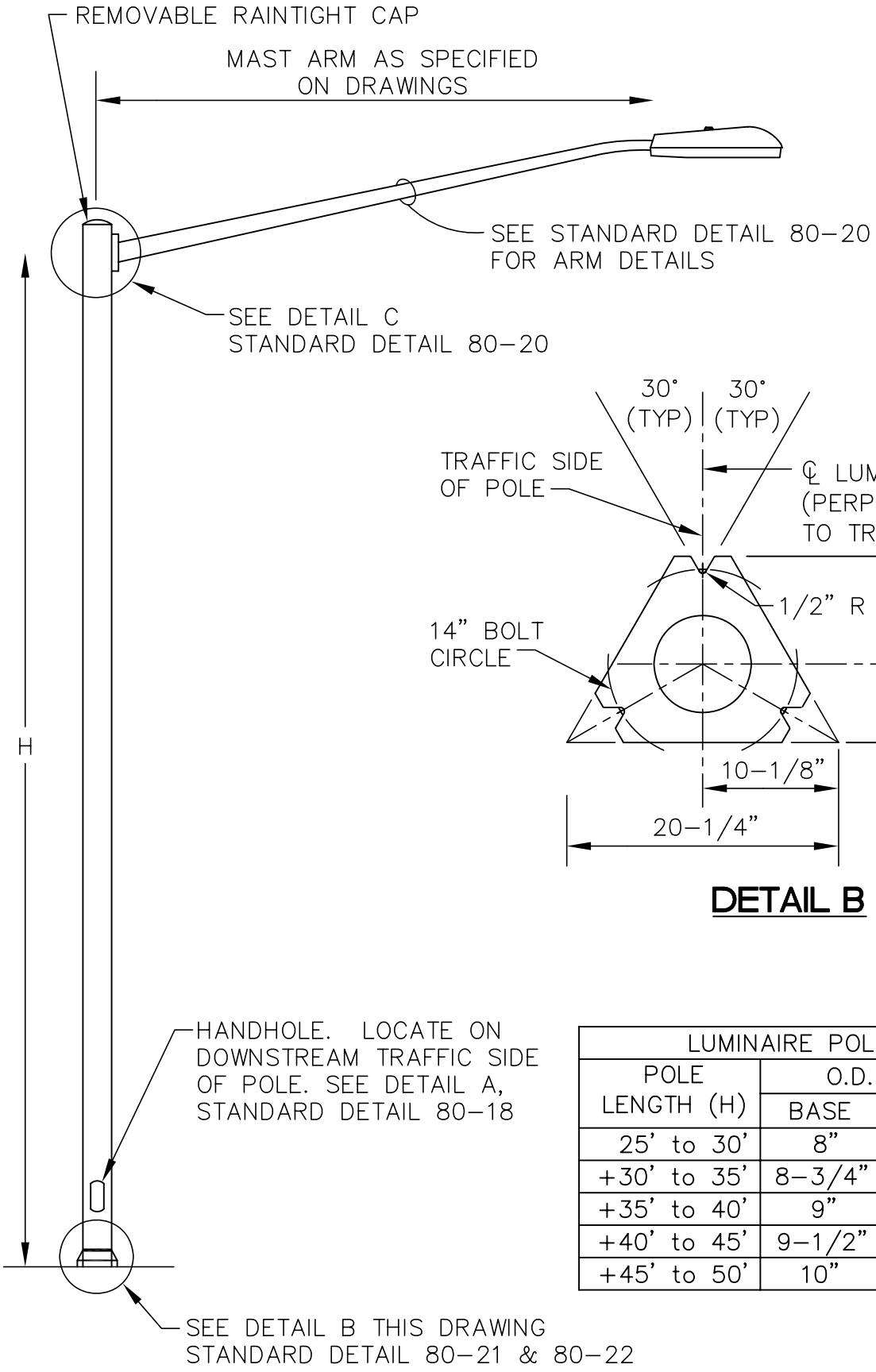

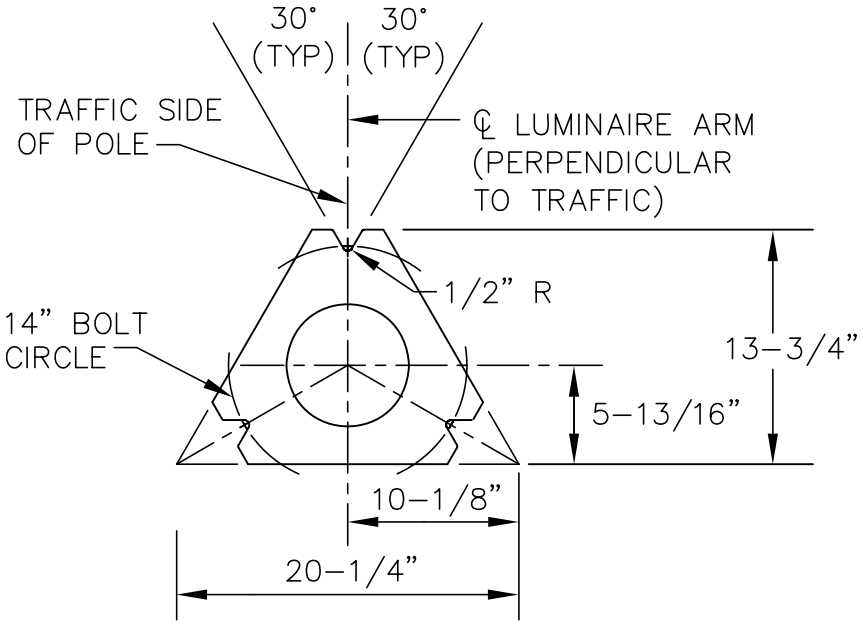

DETAIL B

LUMINAIRE POLE DATA			
POLE LENGTH (H)	O.D. (MIN.)		U.S.S.
	BASE	TOP	GAGE
25' to 30'	8"	3–7/8"	10
+30' to 35'	8–3/4"	3–7/8"	10
+35' to 40'	9"	3–7/8"	10
+40' to 45'	9–1/2"	3–7/8"	10
+45' to 50'	10"	3–7/8"	10

MUNICIPALITY OF ANCHORAGE	SCALE: NTS APPROVED: REVISED: 7/08	FLANGE-MOUNTED LUMINAIRE POLE	SECTION # 80.05 DETAIL # 80–19

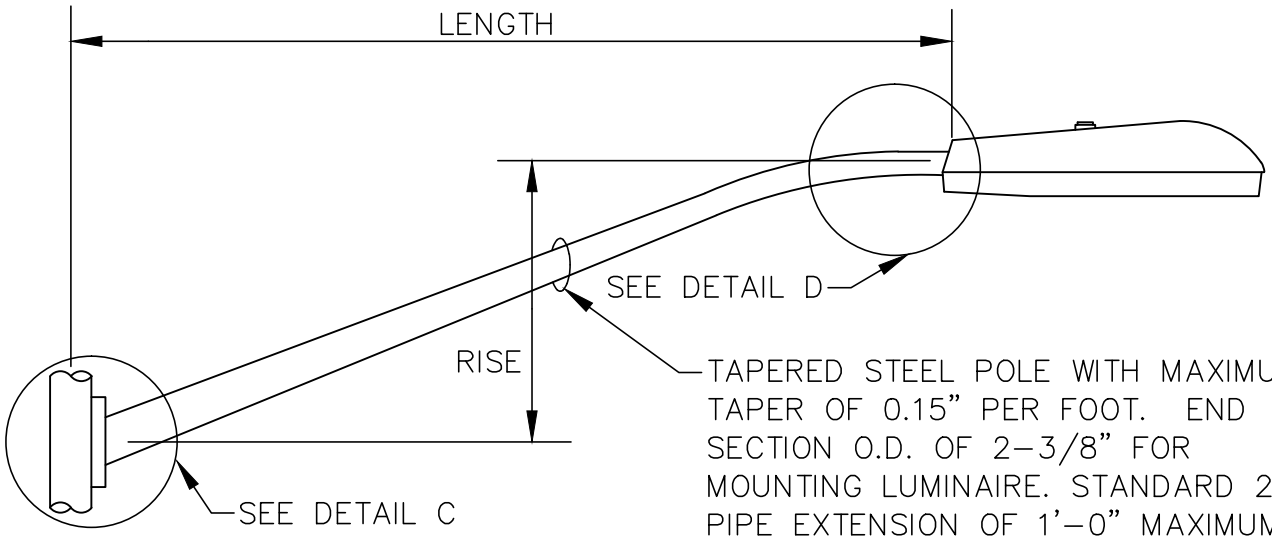

TAPERED STEEL POLE WITH MAXIMUM TAPER OF 0.15" PER FOOT. END SECTION O.D. OF 2-3/8" FOR MOUNTING LUMINAIRE. STANDARD 2" PIPE EXTENSION OF 1'-0" MAXIMUM FOR 6'-10' ARMS AND 3'-0" MAXIMUM FOR 12'-15' ARMS MAY BE USED.

LUMINAIRE ARM DETAIL

LENGTH	RISE
6'	1.5'
8'	2.2'
10'	2.5'
12'	3.6'
15'	4.3'
22'	6.0'

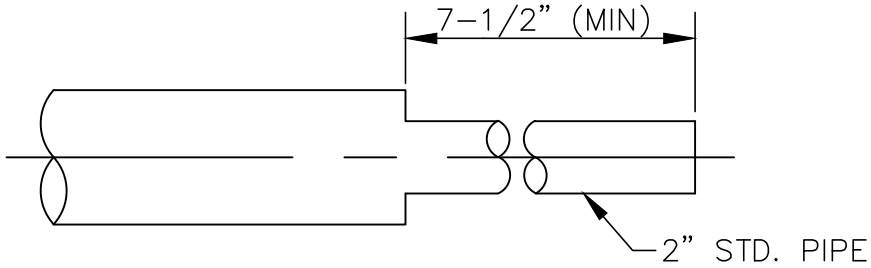

DETAIL D

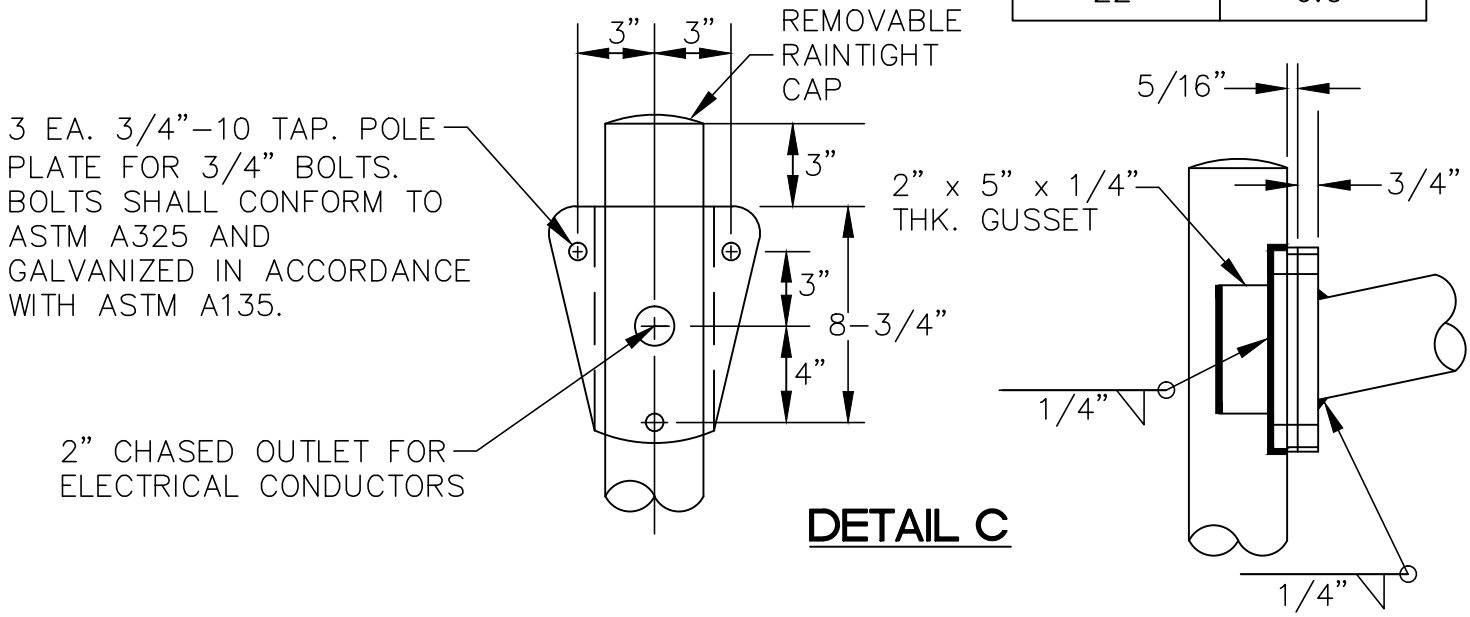

DETAIL C

REVISION: 11/14 ADDED RAINTIGHT CAP

MUNICIPALITY OF ANCHORAGE	SCALE: NTS APPROVED: REVISED: 11/14	LUMINAIRE ARM DETAIL	SECTION # 80.05 DETAIL # 80-20

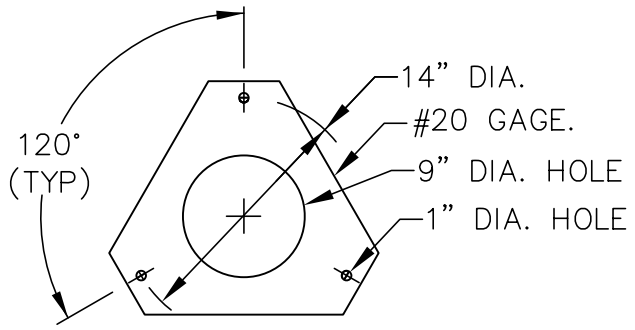

KEEPER PLATE

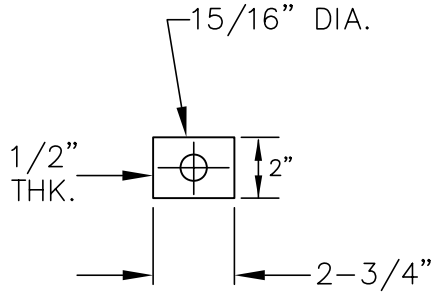

PLATE WASHER

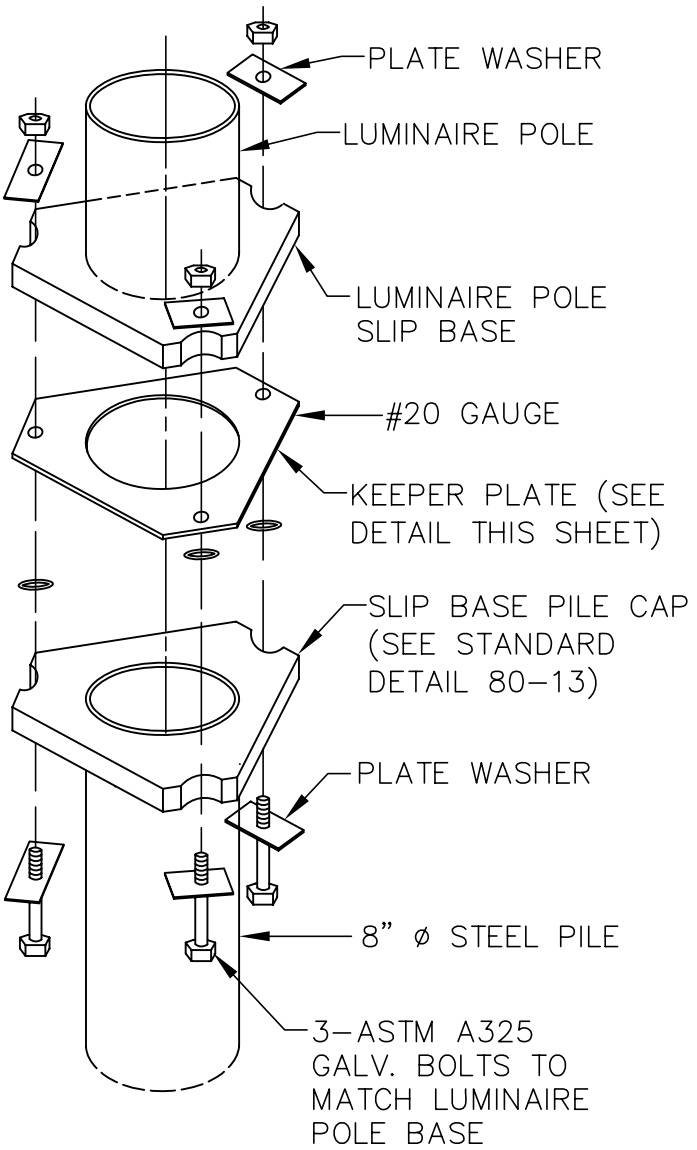

SLIP BASE ASSEMBLY

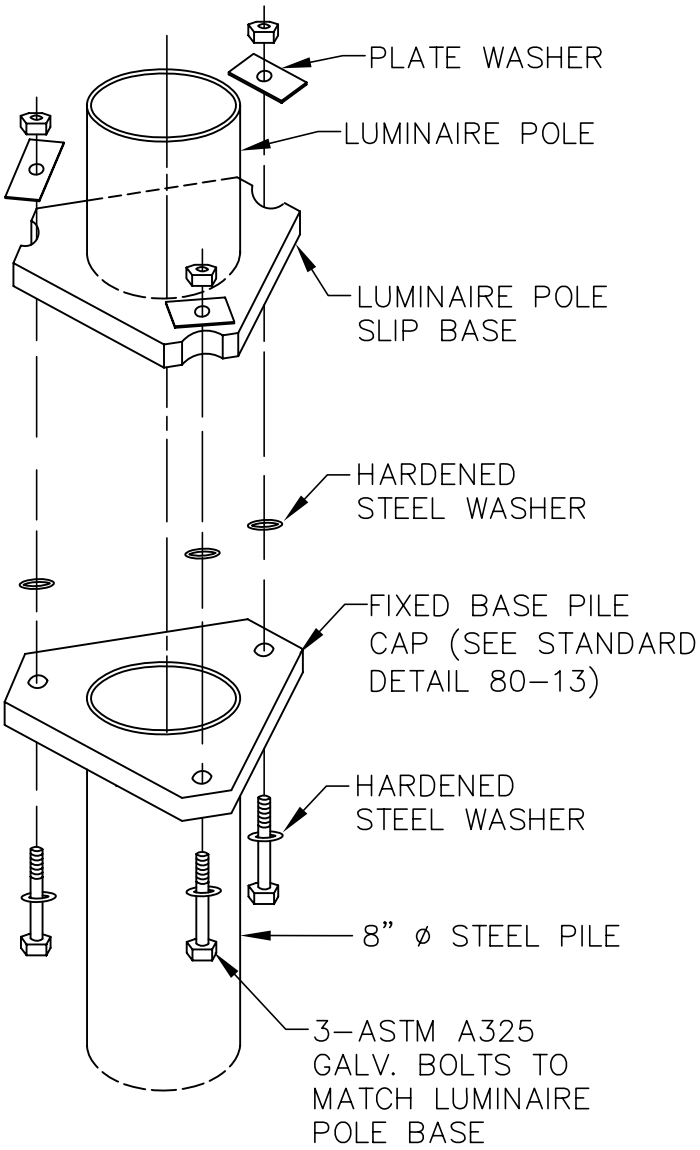

FIXED BASE ASSEMBLY

REVISION: 12/09 ADDED FIXED BASE SPECIFICATIONS

MUNICIPALITY OF ANCHORAGE	SCALE: NTS APPROVED: REVISED: 12/09	DRIVEN STEEL PIPE POLE ASSEMBLIES	SECTION # 80.04 DETAIL # 80-21

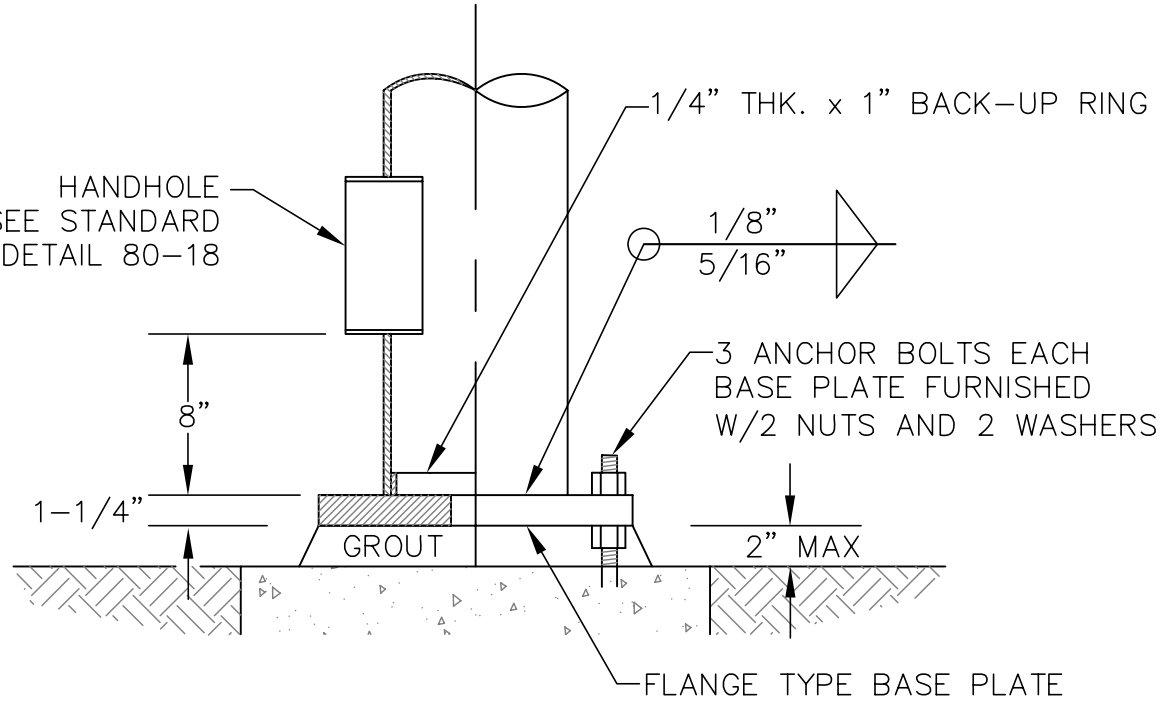

MUNICIPALITY OF ANCHORAGE	SCALE: NTS APPROVED: REVISED: 7/08	**FLANGE-MOUNTED DETAIL FOR CONCRETE LUMINAIRE BASE**	SECTION # 80.05 DETAIL # 80-22

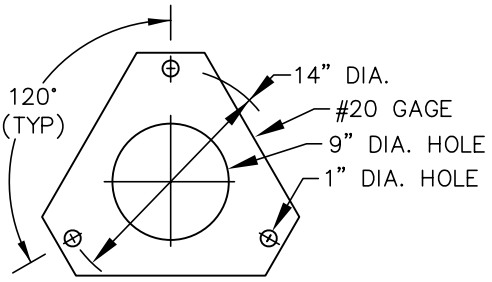

KEEPER PLATE

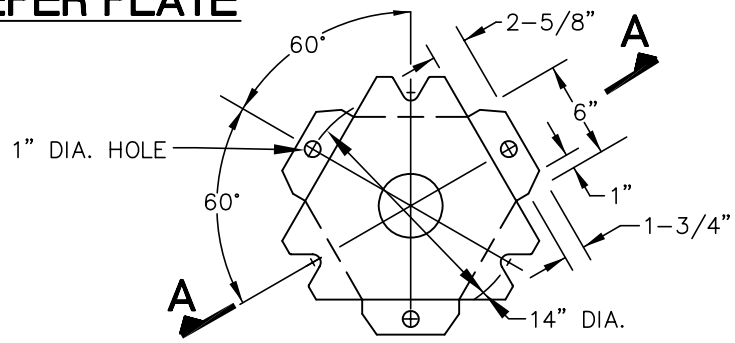

BOTTOM SLIP BASE PLATE

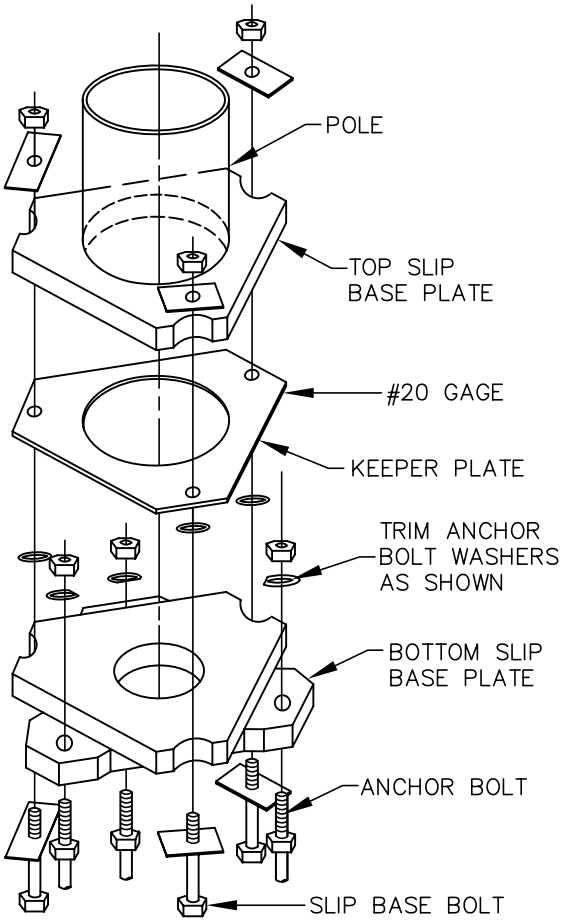

SLIP BASE ASSEMBLY

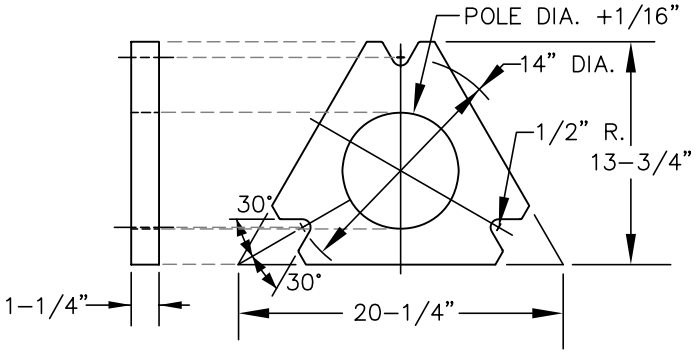

TOP SLIP BASE PLATE

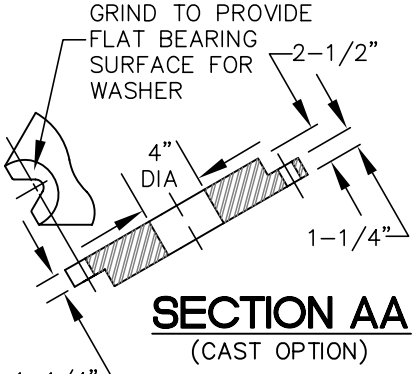

SECTION AA
(CAST OPTION)

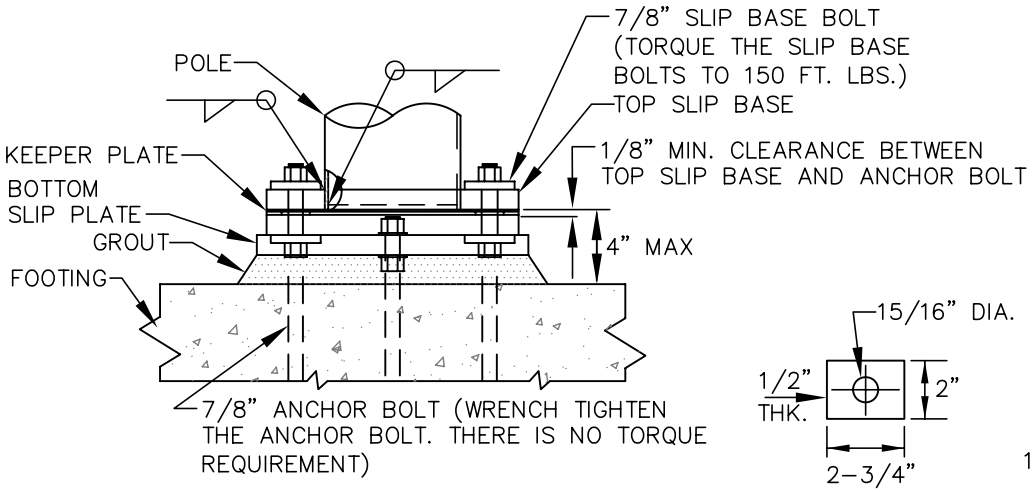

SLIP BASE INSTALLATION

PLATE WASHER

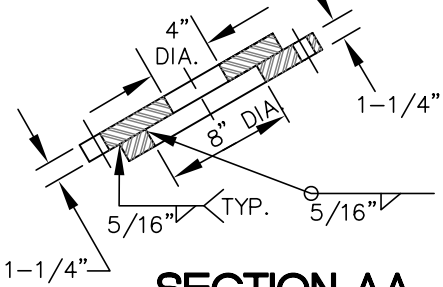

SECTION AA
(WELDED OPTION)

MUNICIPALITY OF ANCHORAGE	SCALE: NTS APPROVED: REVISED: 7/08	CONCRETE LUMINAIRE BASE SLIP-BASE DETAIL	SECTION # 80.05 DETAIL # 80-23

NOTE:
ANGLE VARIES BASED ON MASTARM LENGTH:
50° FOR 15' TO 35' MASTARMS
45° FOR 40' TO 50' MASTARMS
40° FOR 55' TO 65' MASTARMS

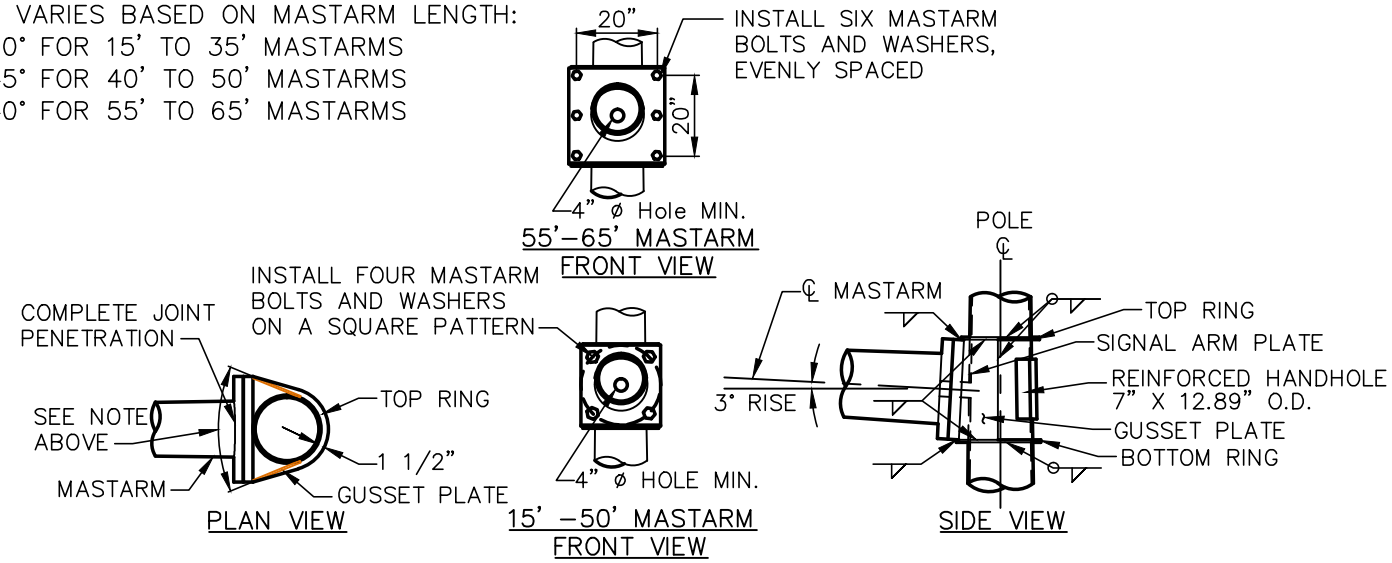

SIGNAL MASTARM CONNECTION DETAIL
NTS
(ELEVATION VIEW OF A RING STIFFENED BUILT–UP BOX)

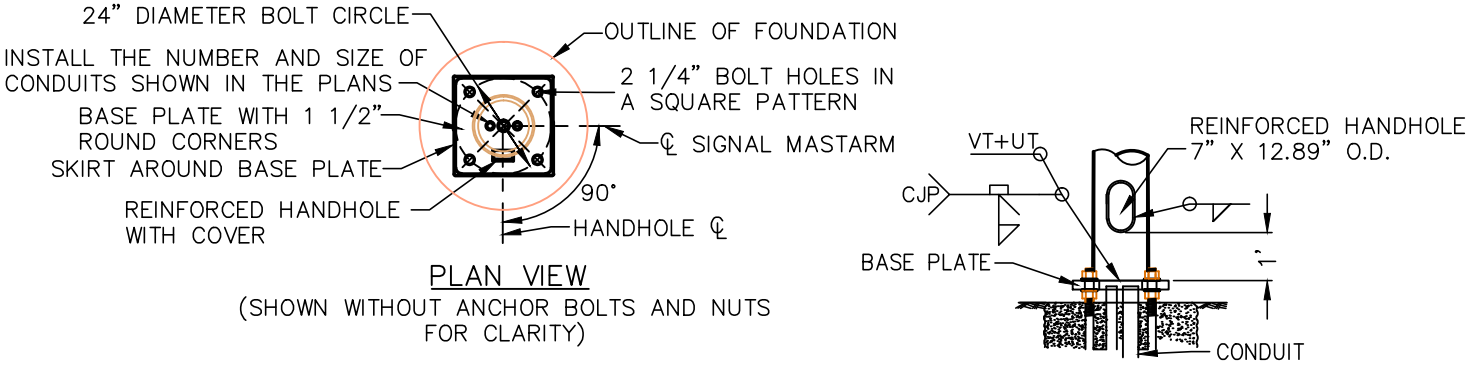

POLE BASE DETAIL
NTS

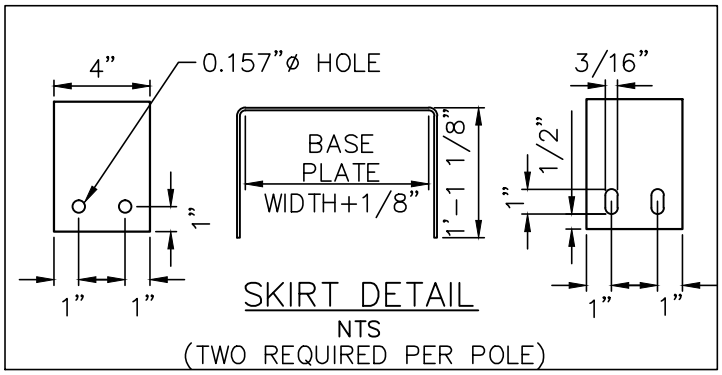

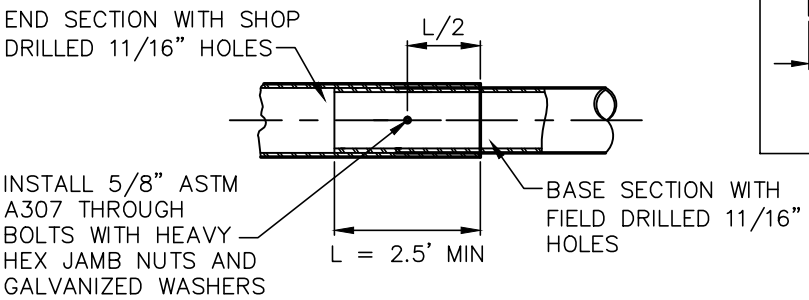

MASTARM SLIP SPLICE ELEVATION DETAIL
NTS

NOTES FROM STANDARD DETAIL 80–25 APPLY TO ALL SIGNAL POLE INSTALLATIONS EXCEPT THAT NOTE 11 DOES NOT PERTAIN TO MASTARMS OF LESS THAN 40'.

REVISION: 11/14 DELETED OLD DETAIL, ALL NEW DRAWING

MUNICIPALITY OF ANCHORAGE	SCALE: NTS APPROVED: REVISED: 11/14	**SIGNAL POLE DETAILS**	SECTION # 80.05 DETAIL # 80–24

NOTES:

1. PROVIDE POLE ASSEMBLIES MEETING THE FOLLOWING DESIGN CRITERIA; 2001 AASHTO STANDARD SPECIFICATIONS FOR STRUCTURAL SUPPORTS FOR HIGHWAY SIGNS, LUMINAIRES AND TRAFFIC SIGNALS, THE LATEST EDITION OF THE MUNICIPALITY OF ANCHORAGE STANDARD SPECIFICATIONS (M.A.S.S) AND, SPECIAL PROVISIONS. DESIGN FOR A BASIC WIND SPEED OF 100 MPH, FATIGUE CATEGORY III, WITH GALLOPING. MEASURE ALLOWED DEFLECTION DUE TO GALLOPING AT THE FREE END OF MASTARM.

2. PROVIDE POLES TO ACCOMMODATE THE MAXIMUM LENGTH SHOWN IN THE MASTARM DATA WITH THE GIVEN LOADS, DIMENSIONS AND MATERIAL REQUIREMENTS.

3. THIS DRAWING SHOWS LOADS (SIGNS AND SIGNALS) TO BE USED BY MANUFACTURERS WHEN DESIGNING POLES. IT DOES NOT SHOW ACTUAL LOADING OF POLES/MASTARMS ON INDIVIDUAL PROJECTS. THIS POLE/MASTARM DESIGN MAY BE USED WITHOUT FURTHER ANALYSIS IF THE FOLLOWING CONDITIONS ARE MET:
   -- THE GUIDE SIGN (LOAD #7) IS ATTACHED TO THE MASTARM BASE SECTION AND,
   -- NOT MORE THAN 4 TRAFFIC SIGNALS AND/OR SIGNS ARE ATTACHED TO THE END SECTION OF THE MASTARM.

   IF THESE CONDITIONS ARE NOT MET, THIS STANDARD POLE/MASTARM DESIGN MAY ONLY BE USED IF DESIGN COMPUTATIONS ARE SUBMITTED THAT DEMONSTRATE CONFORMANCE TO DESIGN CRITERIA USING ACTUAL LOADS. NOTE: DEVICES WITH LESS THAN 1 SQUARE FOOT OF PROJECTED AREA MAY BE ADDED TO THE MASTARM WITHOUT CAUSING A NEED FOR ADDITIONAL DESIGN COMPUTATIONS.

4. THE MANUFACTURER IS TO DETERMINE WELD SIZES. ALL WELDS AND TESTING SHALL CONFORM TO THE LATEST EDITION OF THE STRUCTURAL WELDING CODE AWS D1.1. PROVIDE VISUAL TEST (VT) OF 100% OF ALL WELDS. PROVIDE MAGNETIC PARTICLE TEST (MT) OF 100% OF ALL FILLET WELDS. PROVIDE RADIOGRAPHIC (RT) OR ULTRASONIC TEST (UT) OF 100% OF ALL COMPLETE JOINT PENETRATION WELDS AND A RANDOM 25% OF ALL PARTIAL JOINT PENETRATION LONGITUDINAL SEAM WELDS.

5. FABRICATE POLE TUBES FROM NO MORE THAN 2 PIECES OF STEEL. WHEN USING 2 PIECES, PLACE THE LONGITUDINAL WELDED SEAMS DIRECTLY OPPOSITE ONE ANOTHER.

6. FABRICATE LUMINAIRE ARMS AND CONNECTIONS ACCORDING TO STANDARD DETAIL 80-20.

7. PROVIDE PERMANENT TAGS ON ALL POLE SECTIONS IN ACCORDANCE WITH M.A.S.S. SECTION 80.05, ARTICLE 5.6. PROVIDE A RAIN CAP WHEN NO UPPER SECTION IS SPECIFIED.

8. THE TRAFFIC ENGINEER WILL REJECT DAMAGED OR DEFECTIVE POLES IN ACCORDANCE WITH M.A.S.S. SECTION 80.05 AND FOR ANY OF THE FOLLOWING; VARIANCES FROM APPROVED SHOP DRAWINGS, VARIANCES FROM MATERIAL REQUIREMENTS, SECTIONS MORE THAN 2-PERCENT OUT OF ROUND, SECTIONS BOWED MORE THAN 1-INCH THROUGHOUT THE LENGTH OF THE POLE, MASTARM, OR SEGMENT AND, DAMAGED OR DENTED FINISHES.

9. DRILL A 1" MAXIMUM DIAMETER HOLE AT EACH TRAFFIC SIGNAL LOCATION. ORIENT THE HOLE ON THE HORIZONTAL AXIS OF MASTARMS.

10. INSTALL POLE PLUMB BY ENSURING THE SIDE OPPOSITE THE MASTARM IS VERTICAL IN ITS FINAL DEFLECTED POSITION.

11. ALIGN WELDED SEAMS ON ADJACENT SECTIONS OF MASTARMS TO FORM CONTINUOUS STRAIGHT SEAMS THE LENGTH OF THE MASTARM. MECHANICALLY FORCE MASTARM SECTIONS TOGETHER FOR A SNUG FIT.

12. CLEAN AND REMOVE DIRT, BURRS, MILL SCALE, AND EXCESS GALVANIZATION ON ALL FAYING SURFACES AND THREADED PARTS BEFORE ASSEMBLY. LUBRICATE THE THREADS OF ALL BOLTS AND NUTS WITH LUBRICANT CONTAINING A VISIBLE DYE. TIGHTEN ALL BOLTS ACCORDING TO M.A.S.S SECTIONS 80.04 AND 80.05.

REVISION: 11/14 DELETED OLD DETAIL, ALL NEW DRAWING

MUNICIPALITY OF ANCHORAGE	SCALE: NTS APPROVED: REVISED: 11/14	**SIGNAL POLE NOTES**	SECTION # 80.05 DETAIL # 80-25

ALL NOTES FROM STANDARD DETAIL 80-25 APPLY TO ALL SIGNAL POLE INSTALLATIONS EXCEPT THAT NOTE 11 DOES NOT PERTAIN TO MASTARMS OF LESS THAN 40'.

POLE DESIGN LOADING					
LOAD COMPONENT	HEIGHT (FT)	WEIGHT (LBS)	ICE AREA (SQ FT)	WIND AREA (FACE-SQ FT)	WIND AREA (SIDE-SQ FT)
1 LUMINAIRE	0.67	50	6.00	2.00	2.00
2 CAMERA	0.50	20	2.00	0.5	1.00
3 SIGNAL	5.00	60	29.13	12.50	4.25
4 SIGNAL	5.33	100	46.26	20.44	4.25
5 SIGNAL	7.33	100	45.48	18.33	7.08
6 PED HEAD	1.33	25	6.83	2.00	0.67
7 SIGN	2.50	120	30.00	30.00	0.83
8 SIGN	2.50	25	6.25	6.25	0.83
9 SIGN	3.00	30	7.50	7.50	1.00

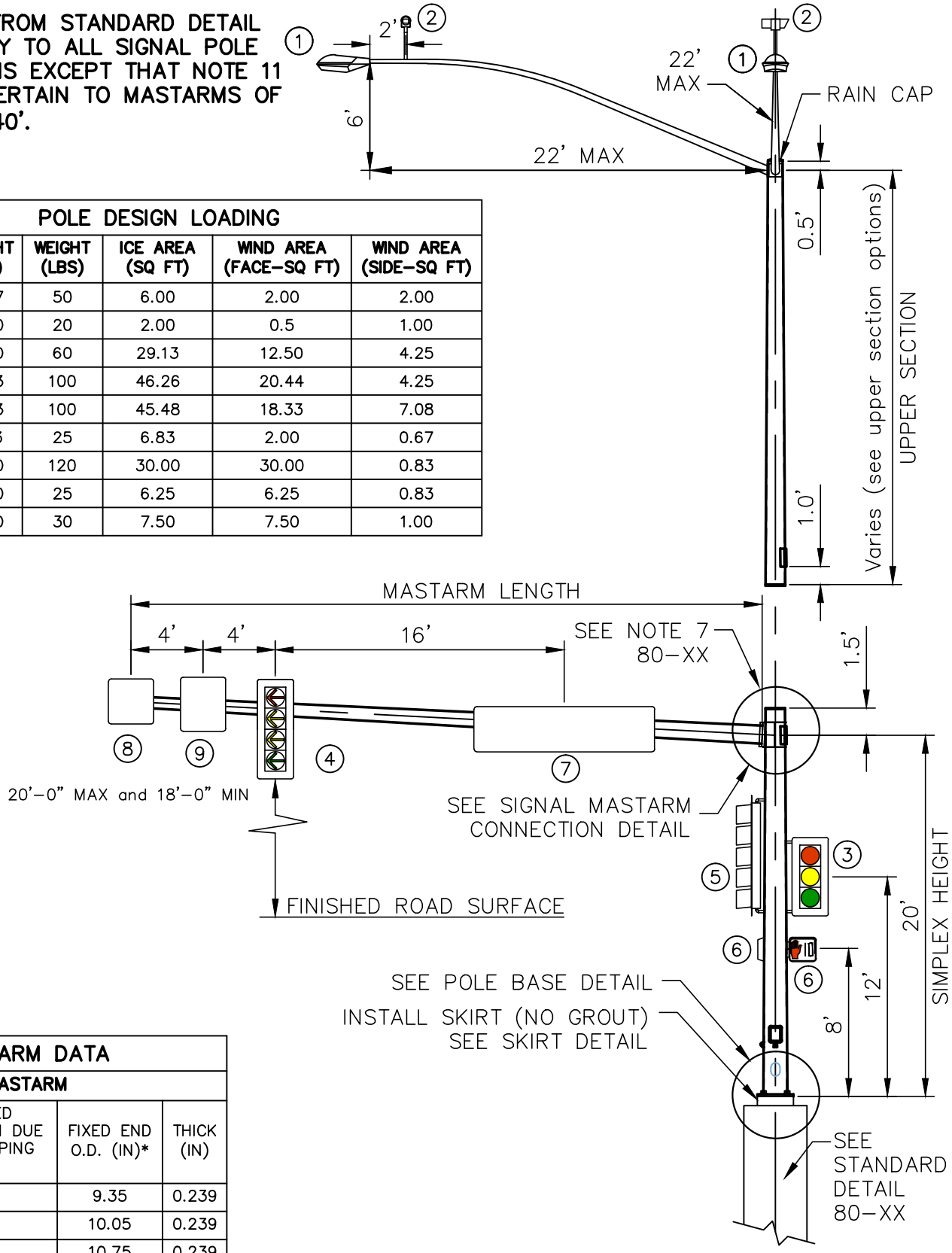

MASTARM DATA			
MASTARM			
LENGTH (FT)	ALLOWED DEFLECTION DUE TO GALLOPING (IN)	FIXED END O.D. (IN)*	THICK (IN)
15	0.670	9.35	0.239
20	0.670	10.05	0.239
25	0.670	10.75	0.239
30	0.670	11.45	0.239
35	0.670	12.15	0.239

* FIXED END DIAMETER MEASURED AT CONNECTION TO BASEPLATE

REVISION: 11/14 DELETED OLD DETAIL, ALL NEW DRAWING

MUNICIPALITY OF ANCHORAGE

SCALE: NTS

APPROVED:

REVISED: 11/14

SIGNAL POLE 15' TO 35' MASTARM ELEVATION VIEW

SECTION # 80.05

DETAIL # 80-26A

ALL NOTES FROM STANDARD DETAIL 80-25 APPLY TO ALL SIGNAL POLE INSTALLATIONS.

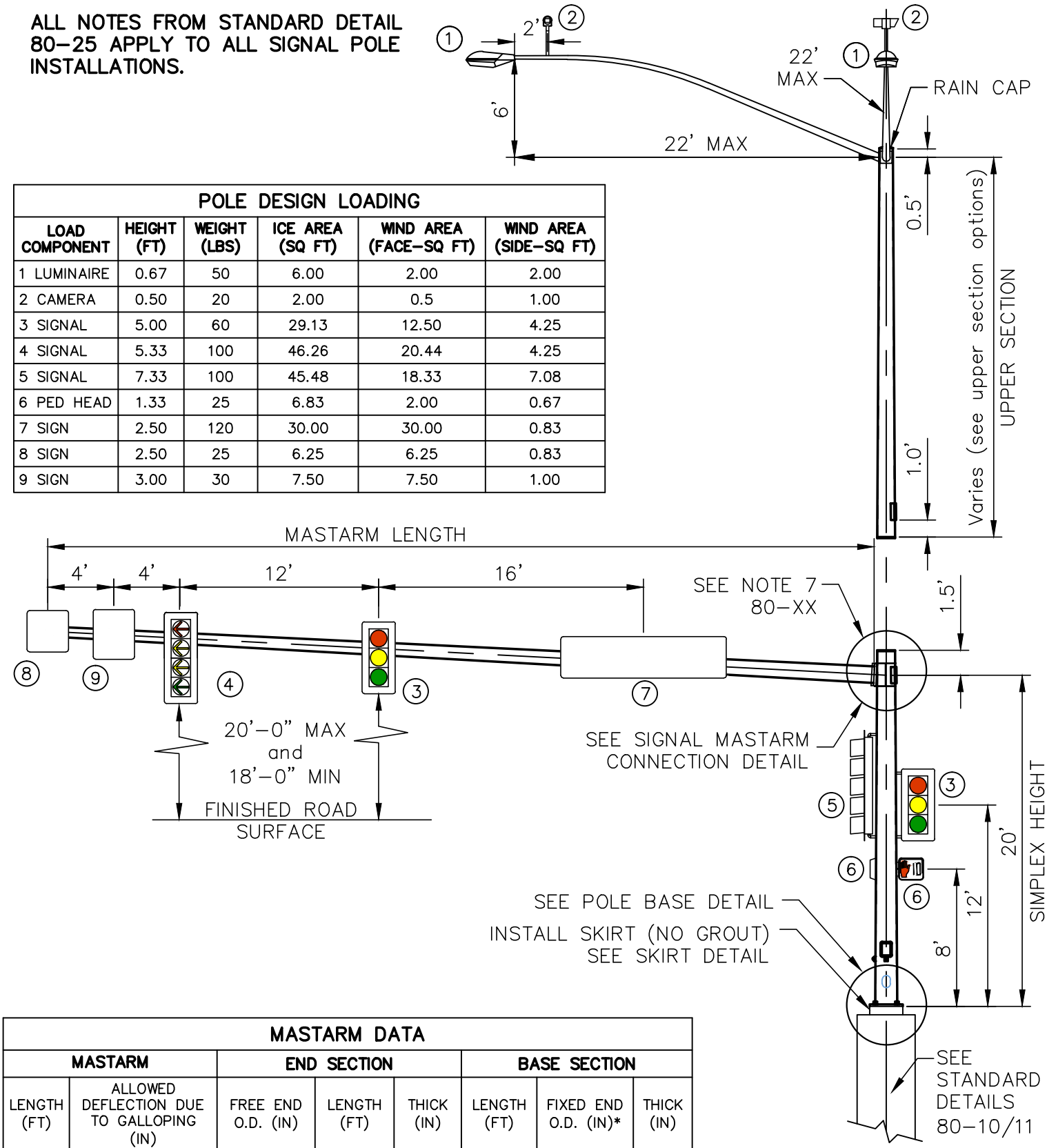

POLE DESIGN LOADING					
LOAD COMPONENT	HEIGHT (FT)	WEIGHT (LBS)	ICE AREA (SQ FT)	WIND AREA (FACE-SQ FT)	WIND AREA (SIDE-SQ FT)
1 LUMINAIRE	0.67	50	6.00	2.00	2.00
2 CAMERA	0.50	20	2.00	0.5	1.00
3 SIGNAL	5.00	60	29.13	12.50	4.25
4 SIGNAL	5.33	100	46.26	20.44	4.25
5 SIGNAL	7.33	100	45.48	18.33	7.08
6 PED HEAD	1.33	25	6.83	2.00	0.67
7 SIGN	2.50	120	30.00	30.00	0.83
8 SIGN	2.50	25	6.25	6.25	0.83
9 SIGN	3.00	30	7.50	7.50	1.00

MASTARM DATA							
MASTARM		END SECTION			BASE SECTION		
LENGTH (FT)	ALLOWED DEFLECTION DUE TO GALLOPING (IN)	FREE END O.D. (IN)	LENGTH (FT)	THICK (IN)	LENGTH (FT)	FIXED END O.D. (IN)*	THICK (IN)
40	8.0	7.3	25.0	0.1793	18.34	12.5	0.3125
45	8.0	7.3	25.0	0.1793	23.34	12.5	0.3125
50	8.0	7.3	25.0	0.1793	28.34	12.5	0.3125

* FIXED END DIAMETER MEASURED AT CONNECTION TO BASEPLATE

REVISION: 11/14 DELETED OLD DETAIL, ALL NEW DRAWING

MUNICIPALITY OF ANCHORAGE

SCALE: NTS

APPROVED:

REVISED: 11/14

SIGNAL POLE 40' TO 50' MASTARM ELEVATION VIEW

SECTION # 80.05

DETAIL # 80-26B

ALL NOTES FROM STANDARD DETAIL 80-25 APPLY TO ALL SIGNAL POLE INSTALLATIONS.

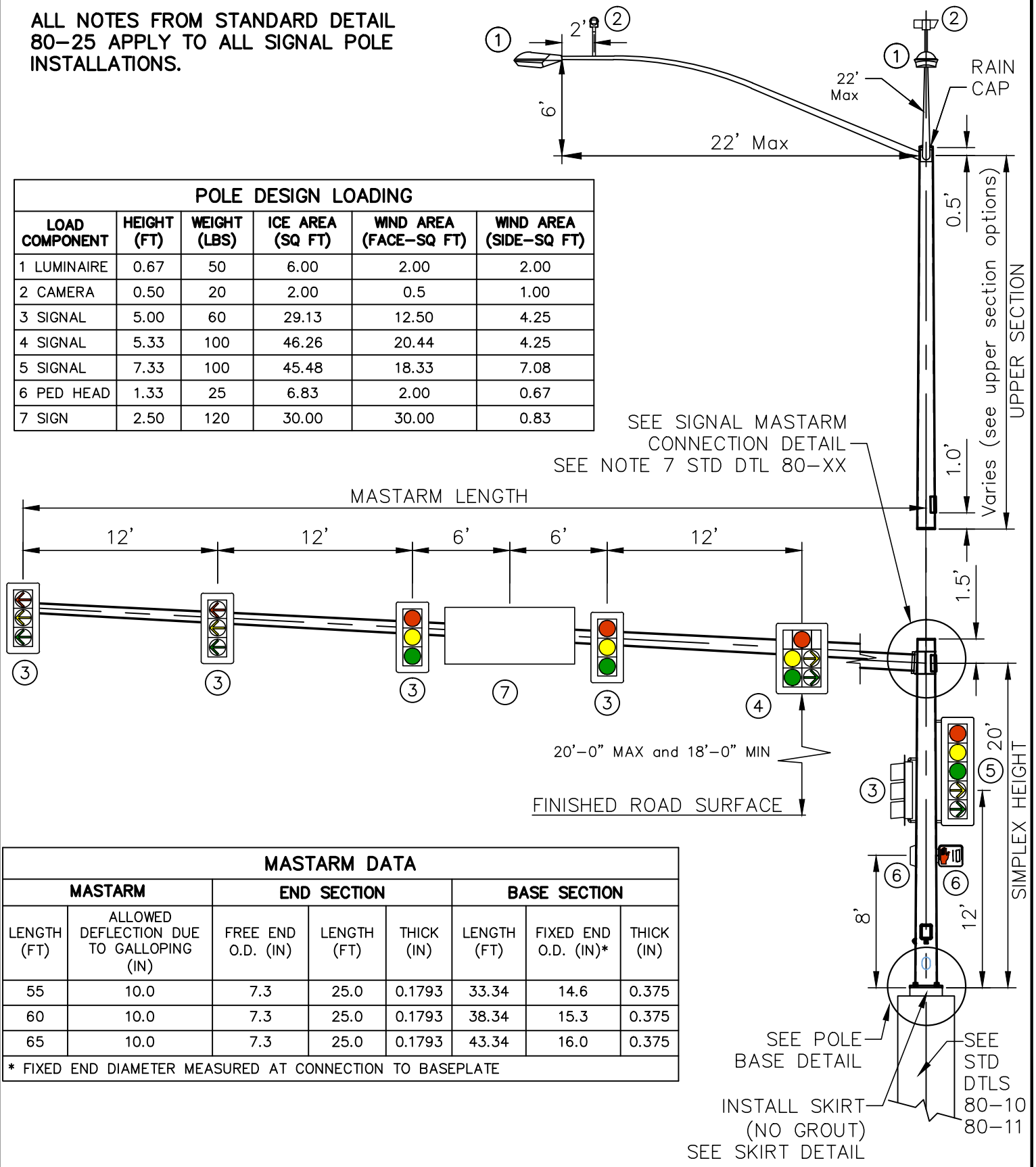

POLE DESIGN LOADING					
LOAD COMPONENT	HEIGHT (FT)	WEIGHT (LBS)	ICE AREA (SQ FT)	WIND AREA (FACE-SQ FT)	WIND AREA (SIDE-SQ FT)
1 LUMINAIRE	0.67	50	6.00	2.00	2.00
2 CAMERA	0.50	20	2.00	0.5	1.00
3 SIGNAL	5.00	60	29.13	12.50	4.25
4 SIGNAL	5.33	100	46.26	20.44	4.25
5 SIGNAL	7.33	100	45.48	18.33	7.08
6 PED HEAD	1.33	25	6.83	2.00	0.67
7 SIGN	2.50	120	30.00	30.00	0.83

MASTARM DATA							
MASTARM		END SECTION			BASE SECTION		
LENGTH (FT)	ALLOWED DEFLECTION DUE TO GALLOPING (IN)	FREE END O.D. (IN)	LENGTH (FT)	THICK (IN)	LENGTH (FT)	FIXED END O.D. (IN)*	THICK (IN)
55	10.0	7.3	25.0	0.1793	33.34	14.6	0.375
60	10.0	7.3	25.0	0.1793	38.34	15.3	0.375
65	10.0	7.3	25.0	0.1793	43.34	16.0	0.375
* FIXED END DIAMETER MEASURED AT CONNECTION TO BASEPLATE							

REVISION: 11/14 DELETED OLD DETAIL, ALL NEW DRAWING

MUNICIPALITY OF ANCHORAGE

SCALE: NTS

APPROVED:

REVISED: 11/14

SIGNAL POLE 55' TO 65' MASTARM ELEVATION VIEW

SECTION # 80.05

DETAIL # 80-26C

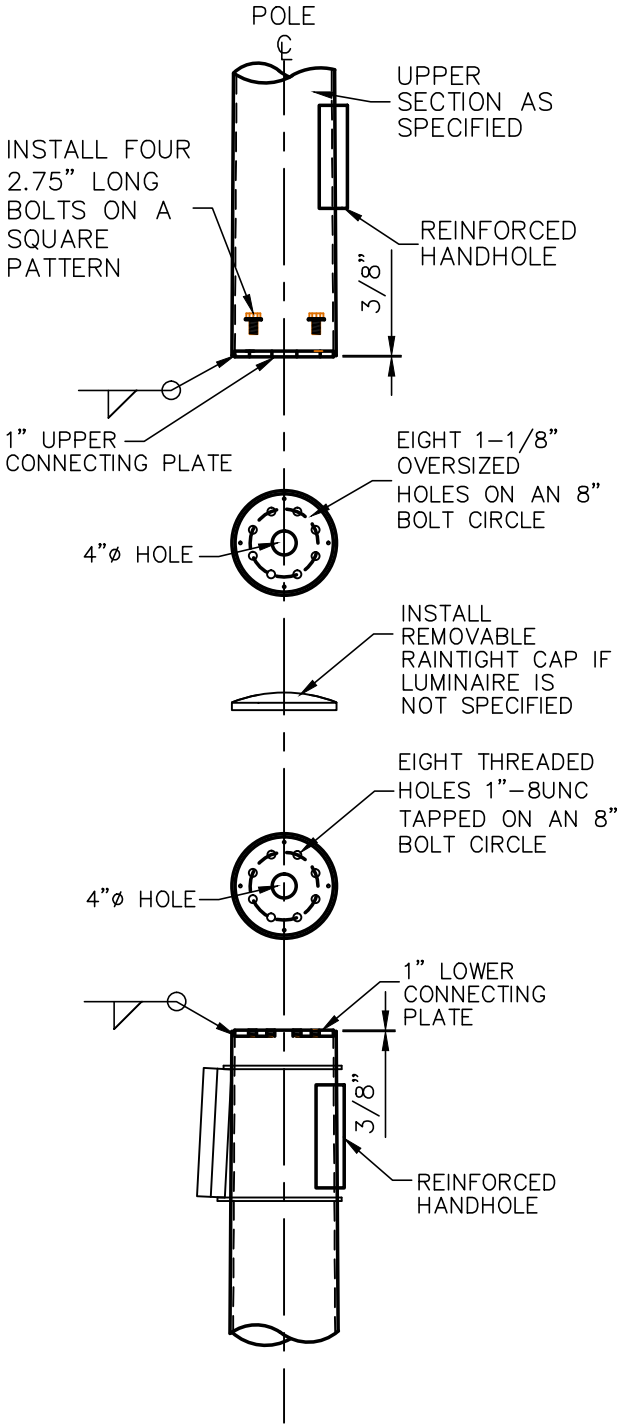

POLE CONNECTION DETAIL

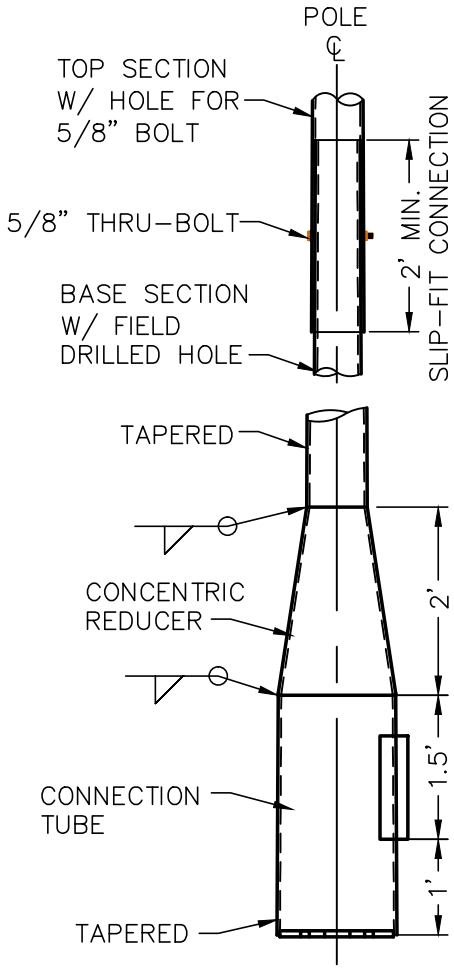

DAVIT CONNECTION DETAIL

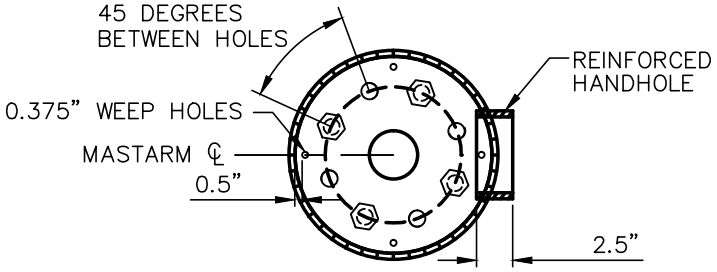

PLATE DETAILS

REVISION: 11/14 DELETED OLD DETAIL, ALL NEW DRAWING

MUNICIPALITY OF ANCHORAGE	SCALE: NTS APPROVED: REVISED: 11/14	**SIGNAL POLE UPPER SECTION OPTIONS PART 1**	SECTION # 80.05 DETAIL # 80-26D

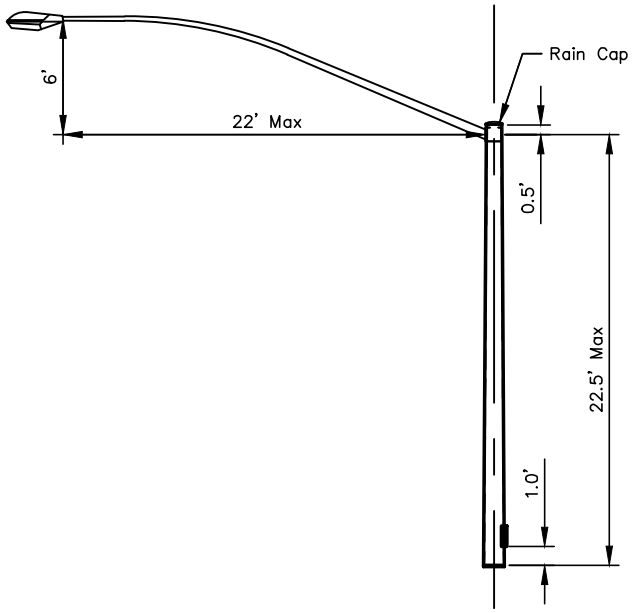

SINGLE LUMINAIRE

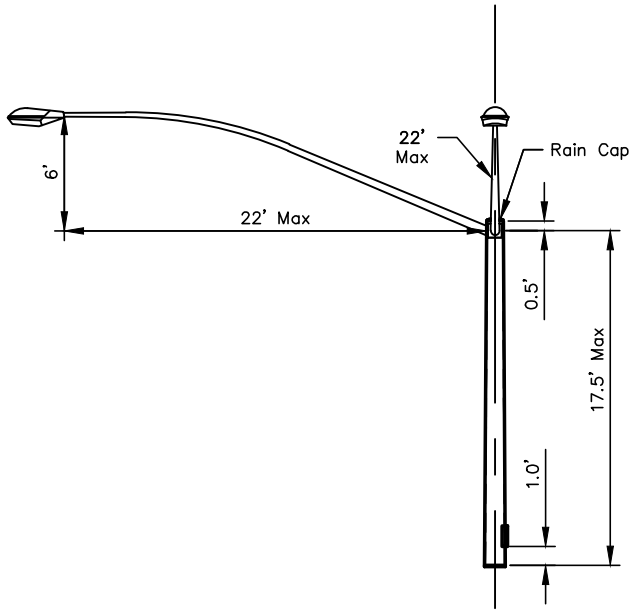

DOUBLE LUMINAIRE

UPPER SECTION OPTIONS

NTS

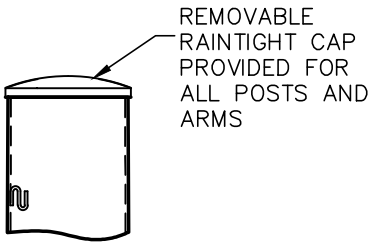

RAIN CAP DETAIL

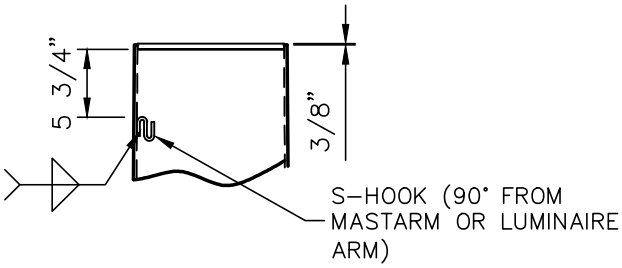

LOWER SECTION POST TOP

NTS

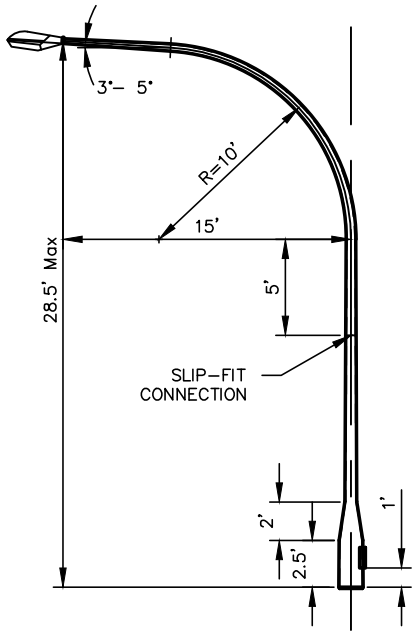

DAVIT LUMINAIRE

REVISION: 11/14 DELETED OLD DETAIL, ALL NEW DRAWING

MUNICIPALITY OF ANCHORAGE	SCALE: NTS APPROVED: REVISED: 11/14	**SIGNAL POLE UPPER SECTION OPTIONS PART 2**	SECTION # 80.05 DETAIL # 80-26E

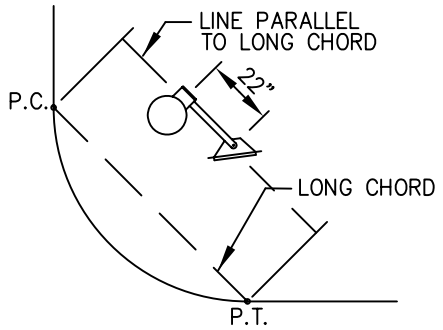

PLAN VIEW

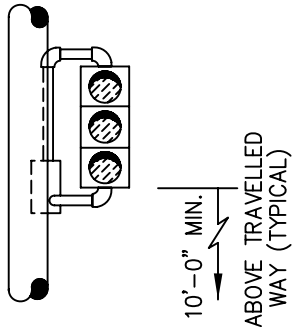

USE A ONE WAY, L.O.D. FRAME FOR INSTALLING ONE FACE

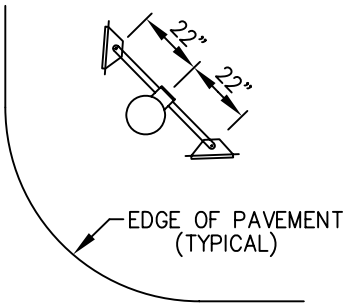

PLAN VIEW

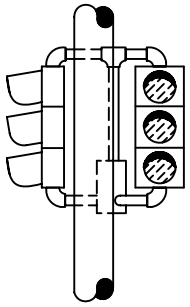

USE A TWO WAY FRAME FOR INSTALLING TWO FACES

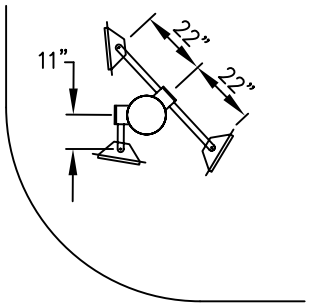

PLAN VIEW

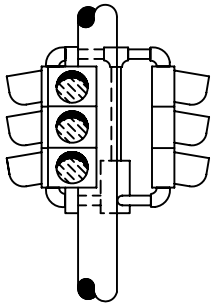

USE TWO FRAMES FOR INSTALLING THREE FACES: A TWO WAY AND A ONE WAY R.O.D.

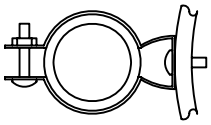

TOP VIEW

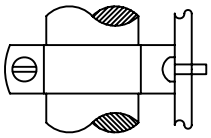

SIDE VIEW

CONDUIT HANGER CLAMP

BOLTED TO THE SIGNAL POLE, 6" TO 12" BELOW THE TOP MOST 90° BEND

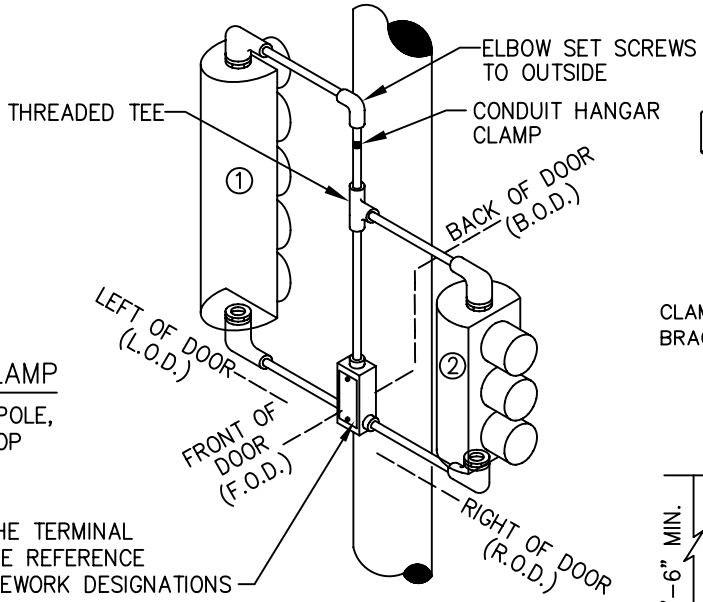

USE THE DOOR OF THE TERMINAL COMPARTMENT AS THE REFERENCE POINT FOR ALL FRAMEWORK DESIGNATIONS

FRAMEWORK DESCRIPTION

HEAD NO. 1 OFFSET L.O.D.
HEAD NO. 2 OFFSET R.O.D.

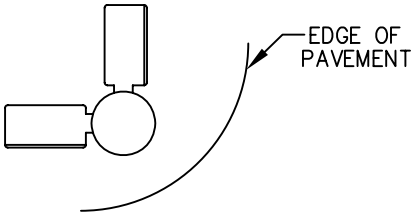

PLAN VIEW

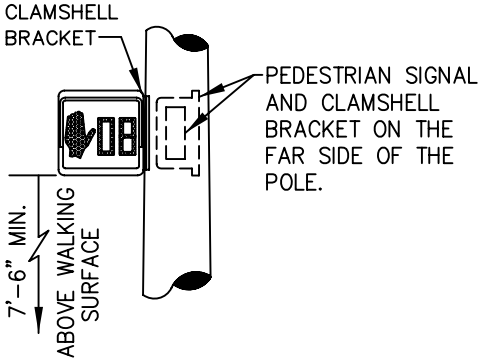

PEDESTRIAN SIGNAL

NOTE: SHOWN WITHOUT BACKPLATES

MUNICIPALITY OF ANCHORAGE	SCALE: NTS APPROVED: REVISED: 10/07	SIDE-MOUNTED SIGNAL DETAILS	SECTION # 80.19 DETAIL # 80-27

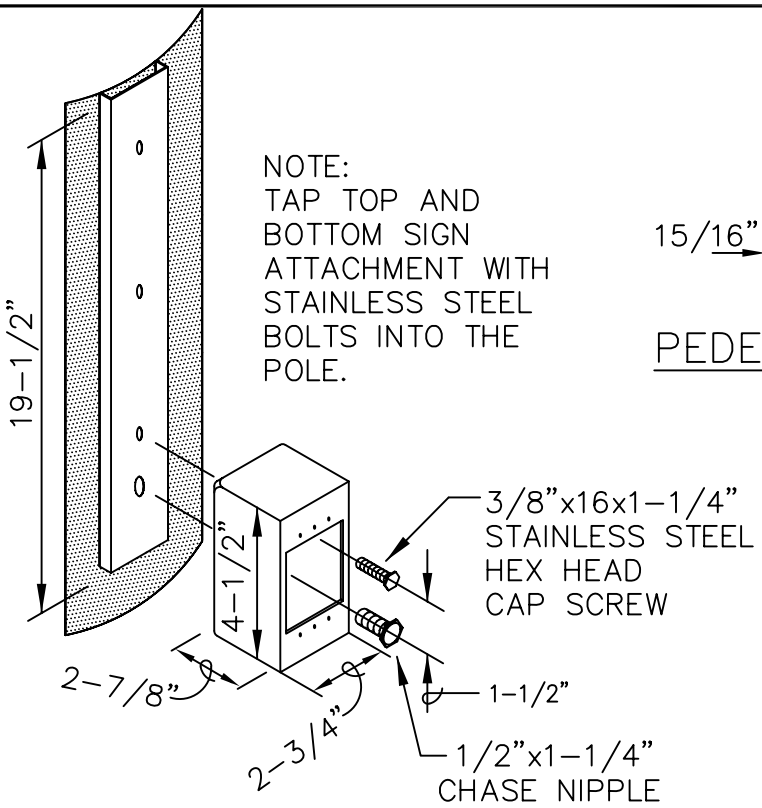

PEDESTRIAN BUTTON HOUSING DETAIL

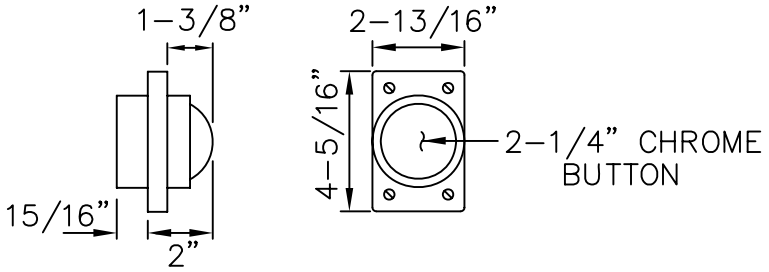

PEDESTRIAN PUSH BUTTON SWITCH

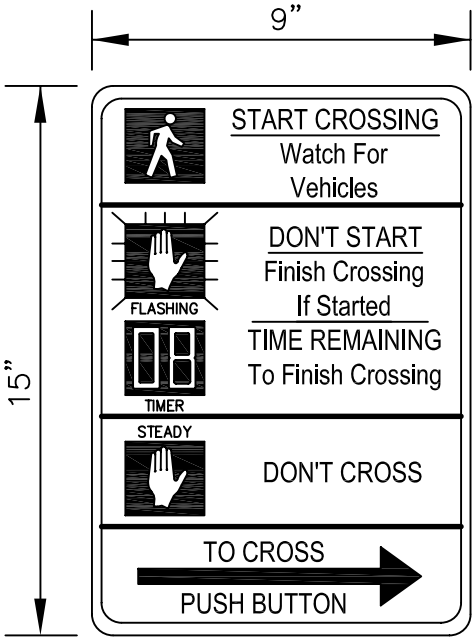

R10-3E SIGN DETAIL

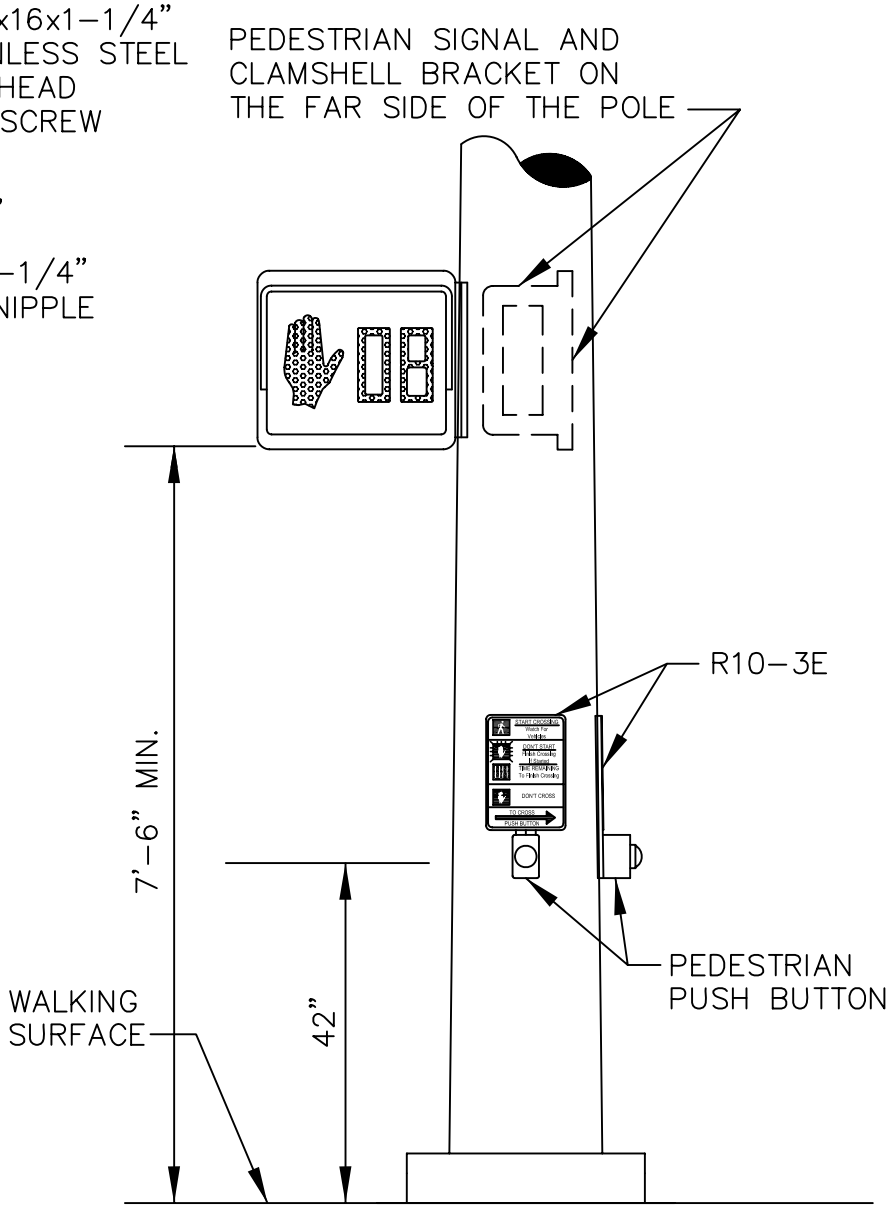

PEDESTRIAN HARDWARE

MUNICIPALITY OF ANCHORAGE	SCALE: NTS APPROVED: REVISED: 6/08	**PEDESTRIAN PUSH BUTTON ASSEMBLY**	SECTION # 80.21 DETAIL # 80-28

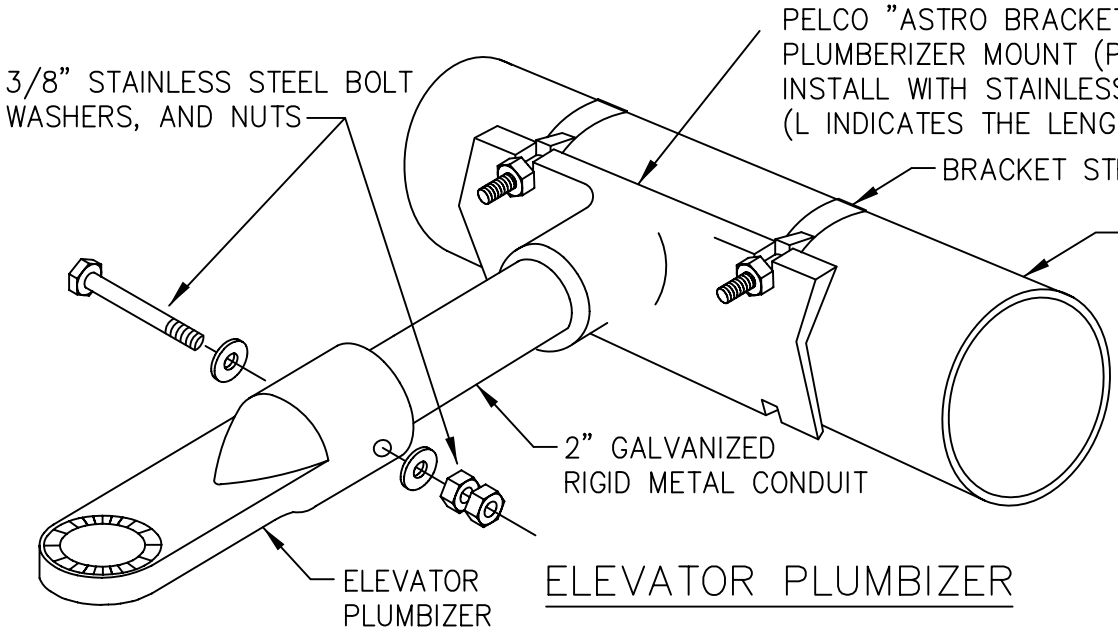

ELEVATOR PLUMBIZER

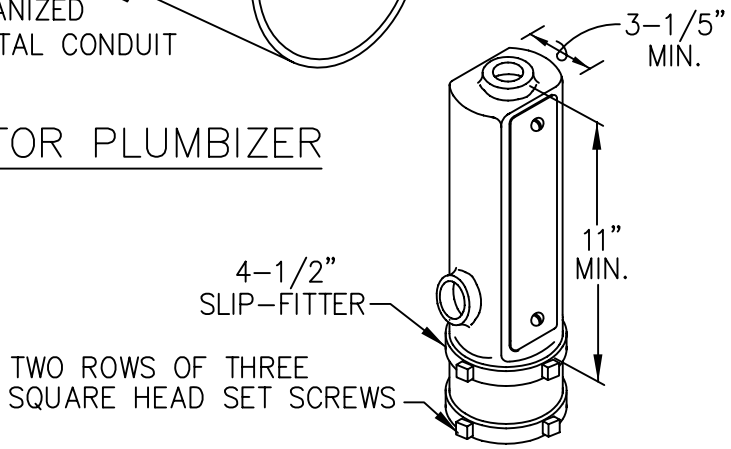

TERMINAL COMPARTMENT WITH SLIP FITTER

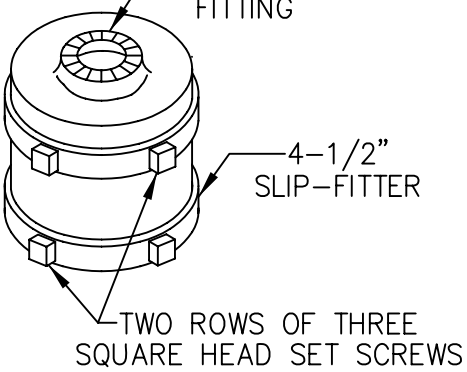

SLIP FITTER

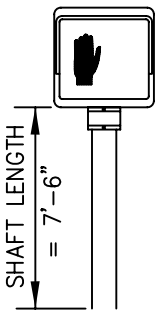

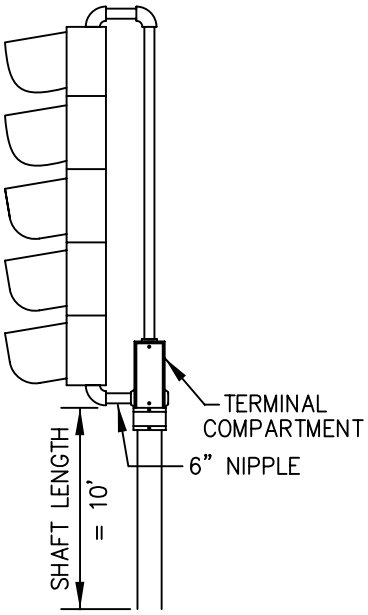

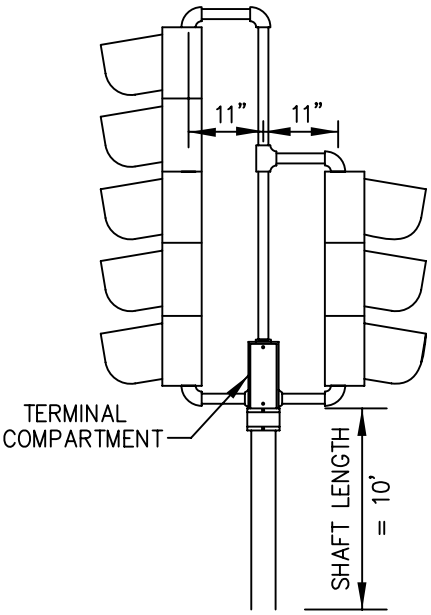

POST TOP MOUNTED SIGNAL DETAILS

(SHOWN WITHOUT BACKPLATES)

MUNICIPALITY OF ANCHORAGE	SCALE: NTS APPROVED: REVISED: 10/07	POST TOP AND MAST ARM MOUNTED SIGNAL DETAILS	SECTION # 80.19 DETAIL # 80-29

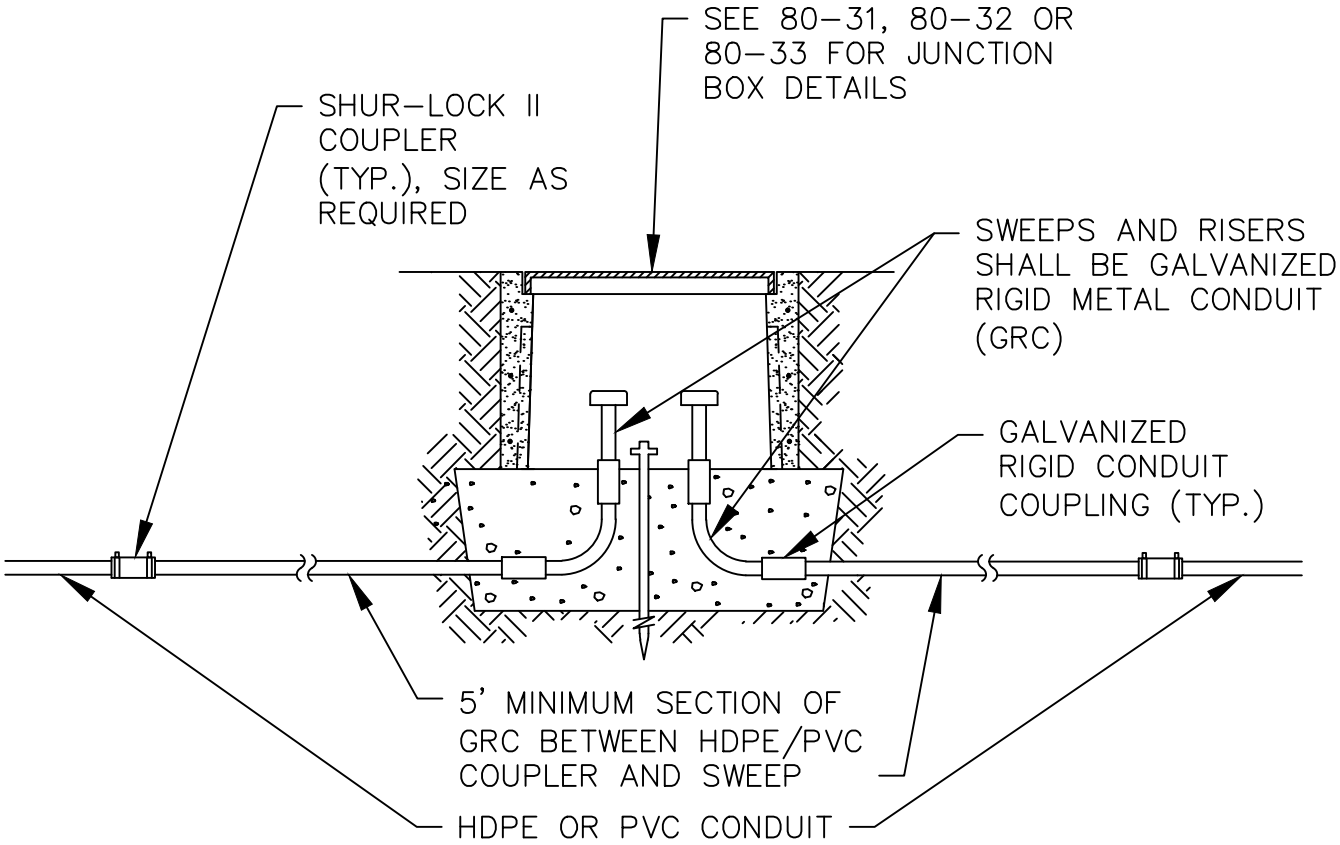

SIZE CONDUIT AS SHOWN ON DRAWINGS

REVISION: 1/15 NEW DETAIL

MUNICIPALITY OF ANCHORAGE	SCALE: NTS APPROVED: REVISED: 1/15	HDPE/PVC TRANSITION DETAIL	SECTION # 80.07 DETAIL # 80-30

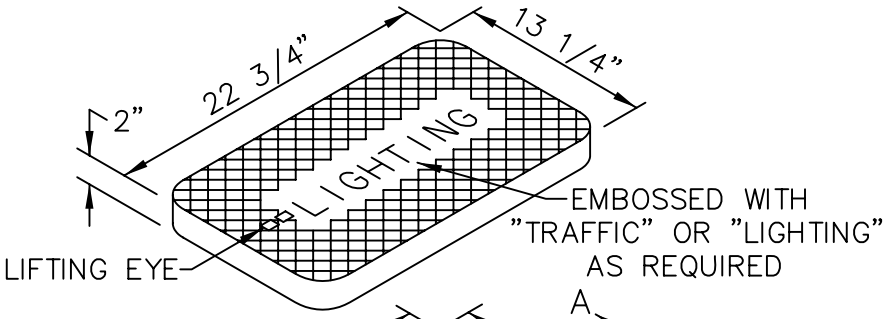

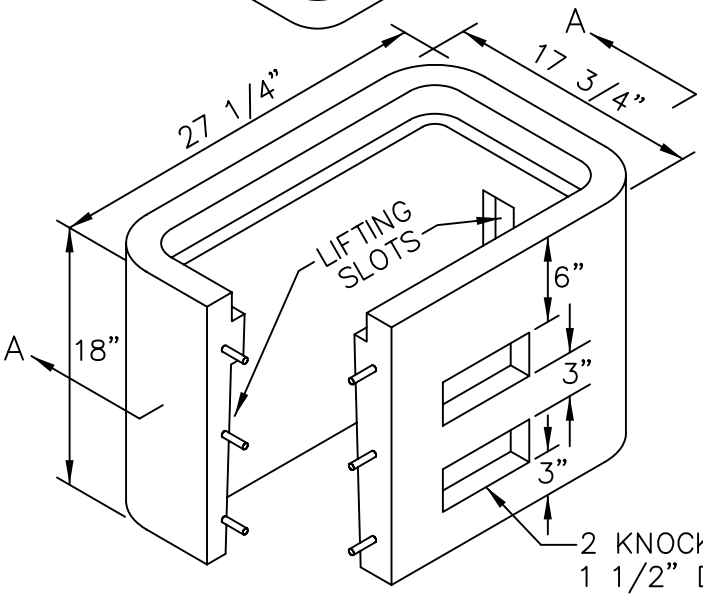

2 KNOCKOUTS CENTERED ON ONE SIDE
1 1/2" DEEP x 3" HIGH x 7" WIDE
FOR LOOP DETECTOR INSTALLATION

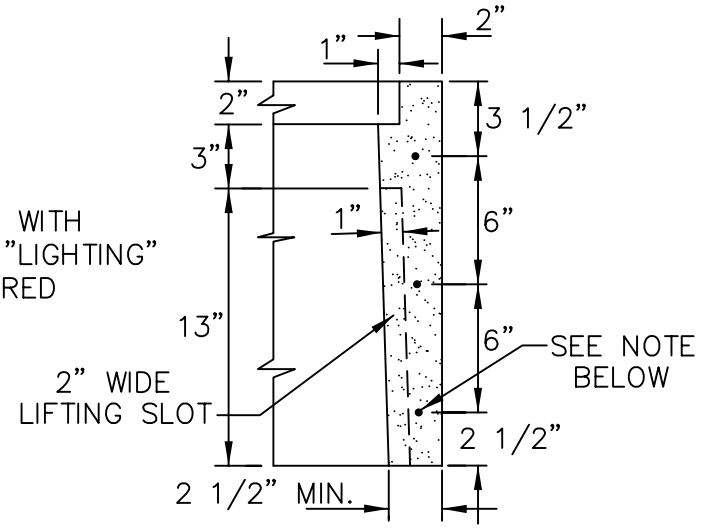

DETAIL A

NOTE: REINFORCEMENT MAY CONSIST OF;
1. 9 GAGE WELDED WIRE FRAME.
2. 3–6 GAGE HORIZONTAL WIRE LOOPS.
3. SYNTHETIC FIBER REINFORCED CONCRETE THAT MEETS ASTM C 1116 AND CONTAINS FIBER IN PROPORTIONS AS RECOMMENDED BY THE FIBER MANUFACTURER.

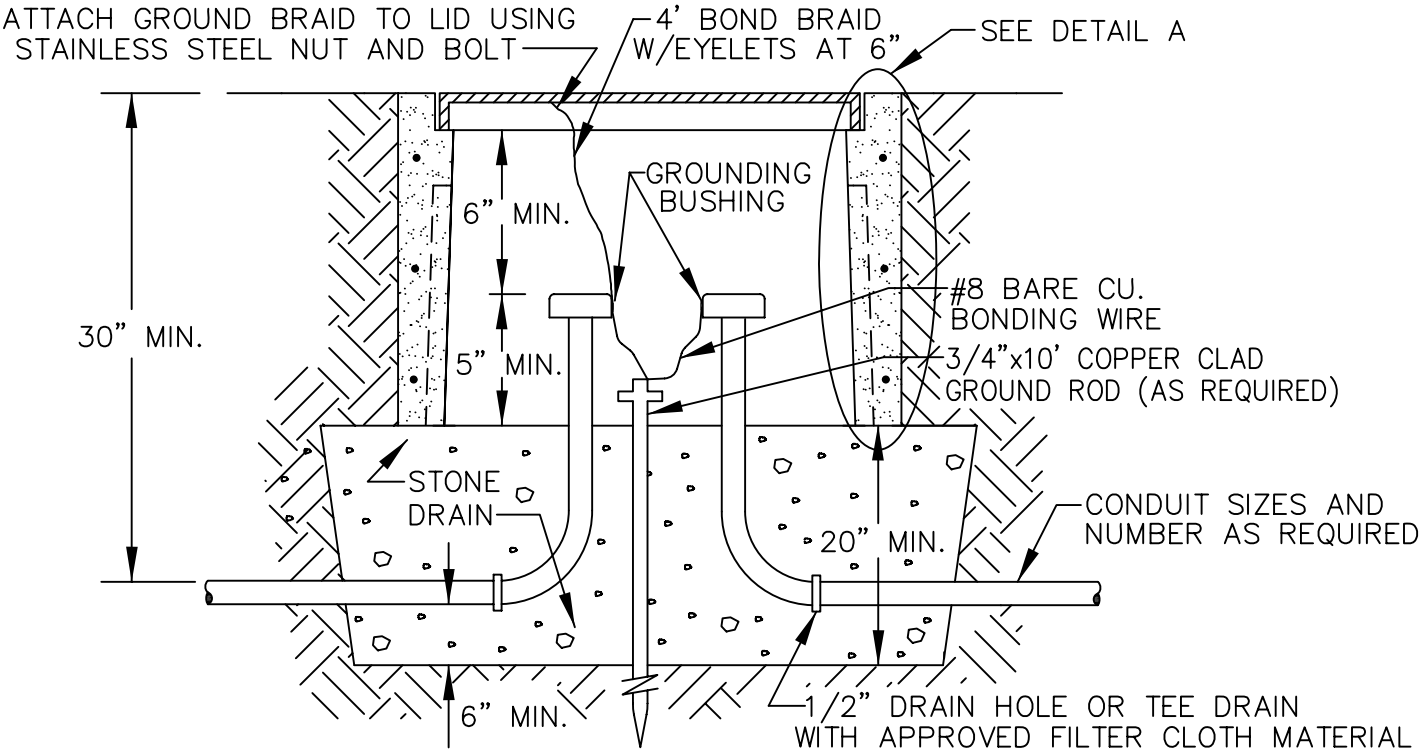

SECTION A–A

MUNICIPALITY OF ANCHORAGE	SCALE: NTS APPROVED: REVISED: 10/07	TYPE 1A JUNCTION BOX	SECTION # 80.08 DETAIL # 80–31

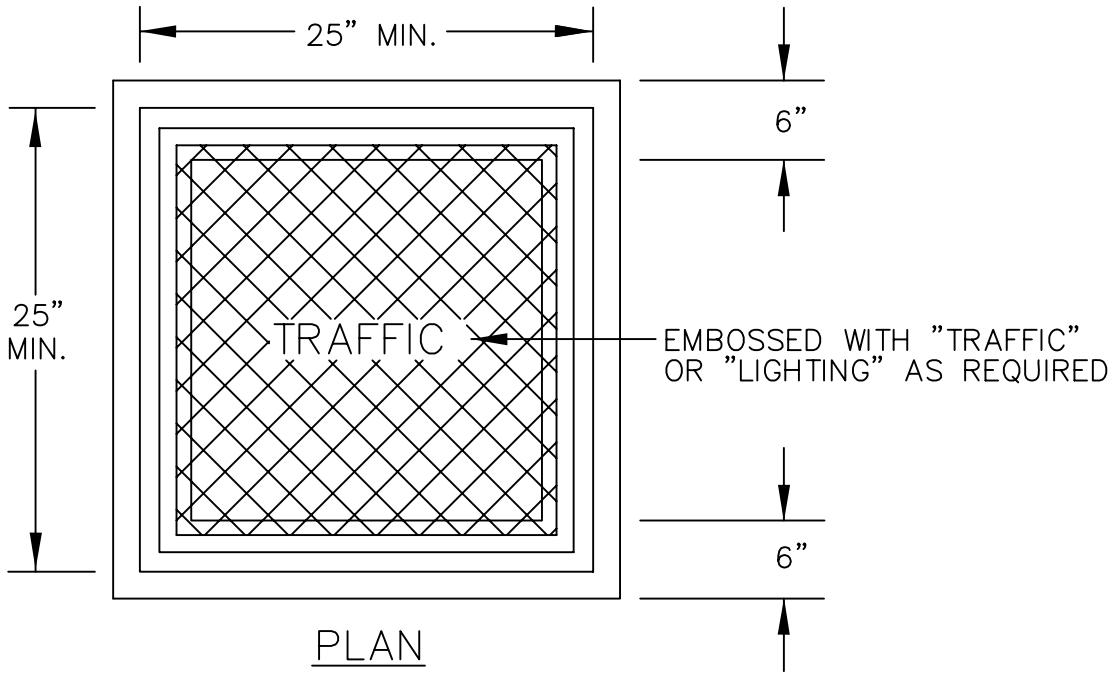

PLAN

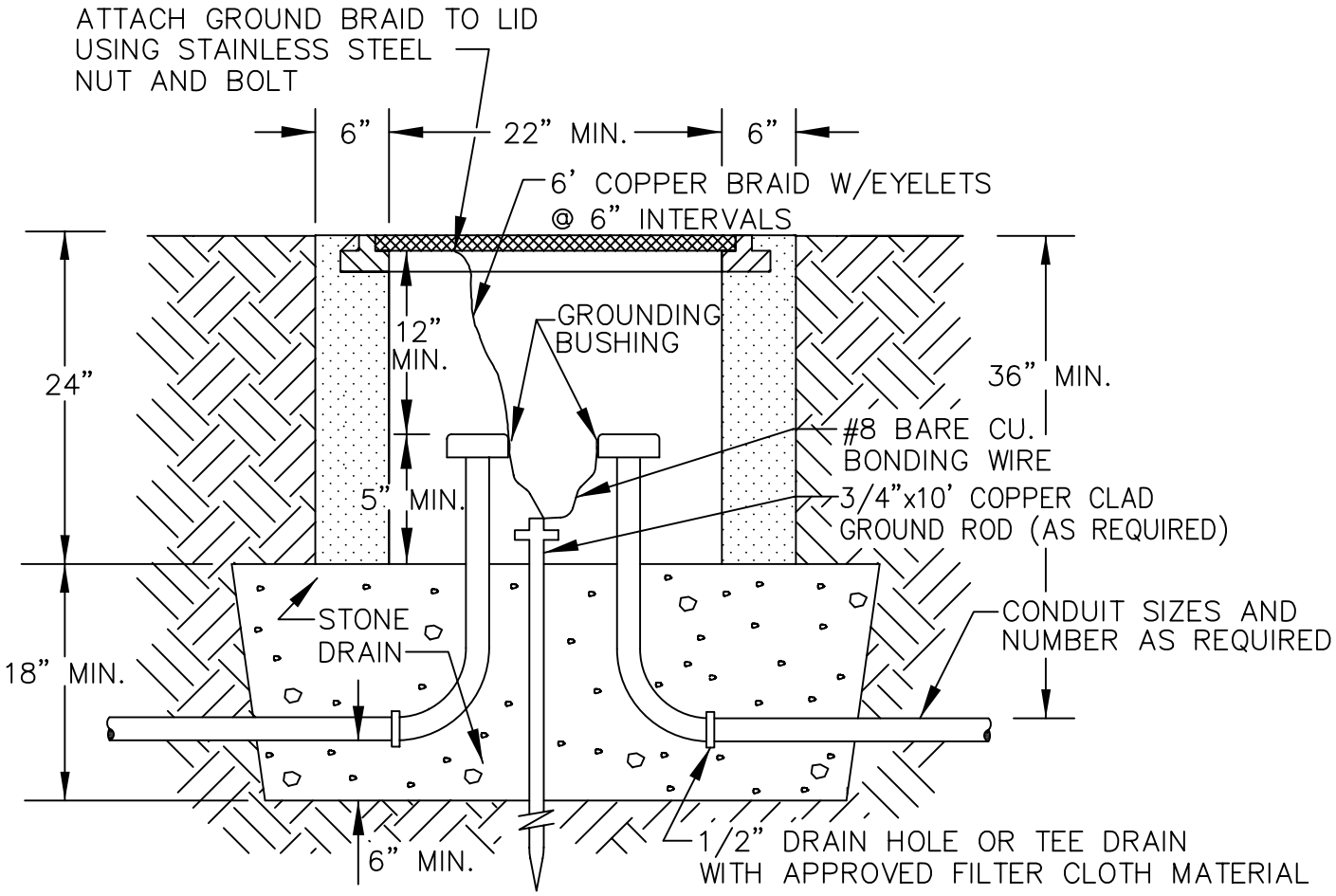

SECTION

MUNICIPALITY OF ANCHORAGE	SCALE: NTS APPROVED: REVISED: 5/08	**TYPE II JUNCTION BOX**	SECTION # 80.08 DETAIL # 80–32

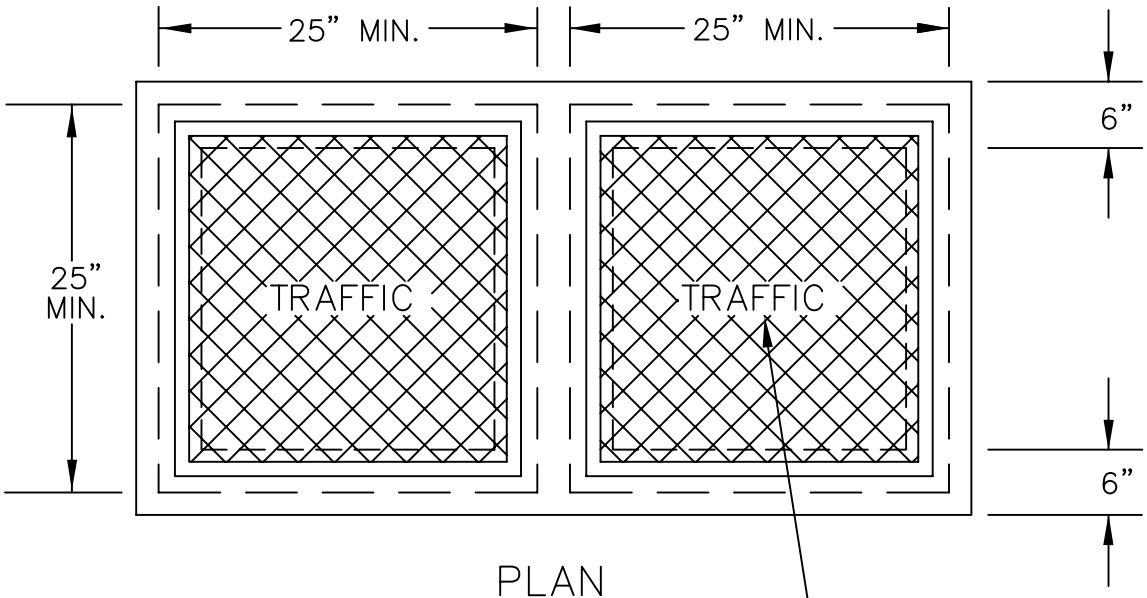

PLAN

EMBOSSED WITH "TRAFFIC" OR "LIGHTING" AS REQUIRED

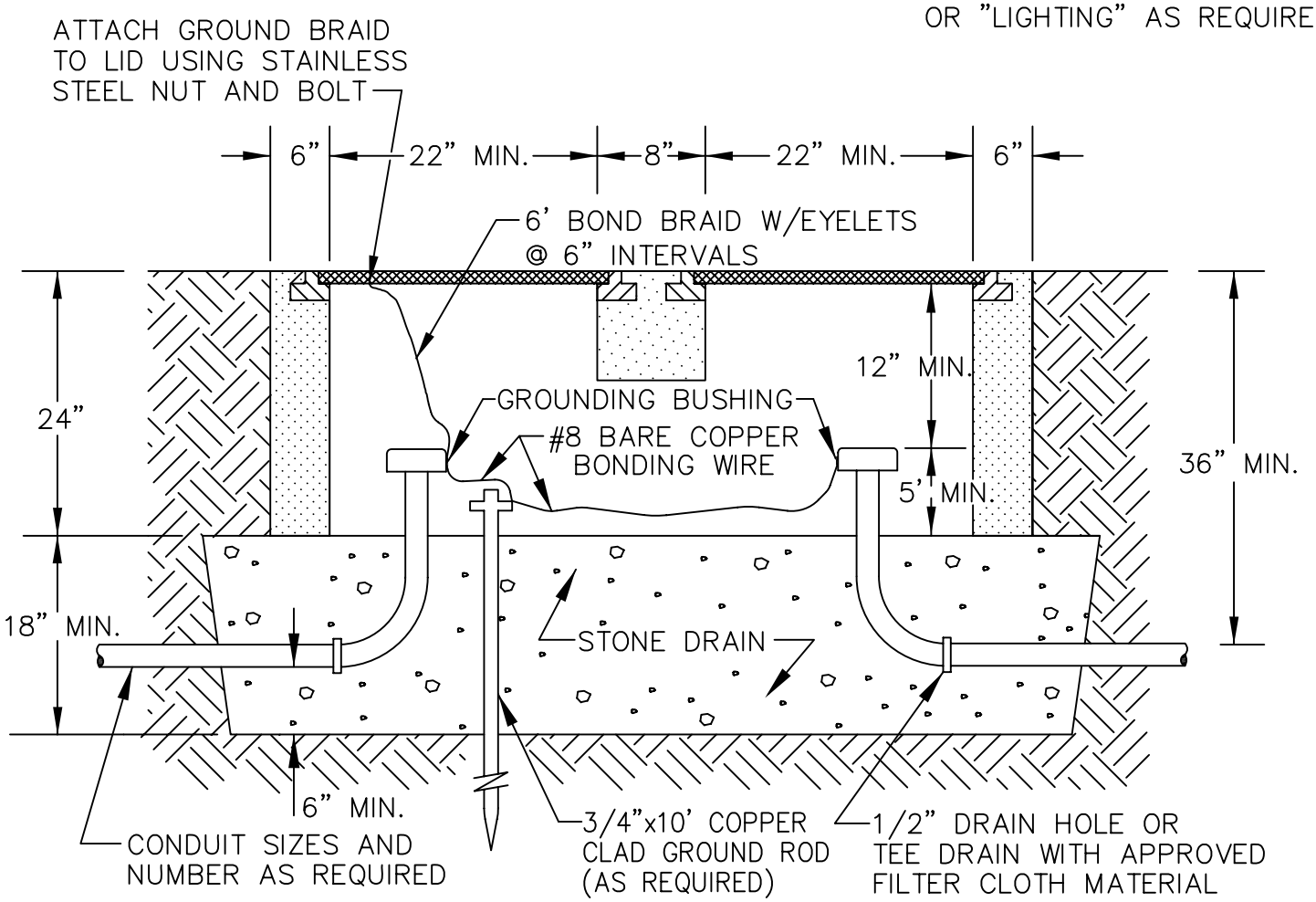

SECTION

MUNICIPALITY OF ANCHORAGE	SCALE: NTS APPROVED: REVISED: 5/08	TYPE III JUNCTION BOX	SECTION # 80.08 DETAIL # 80–33

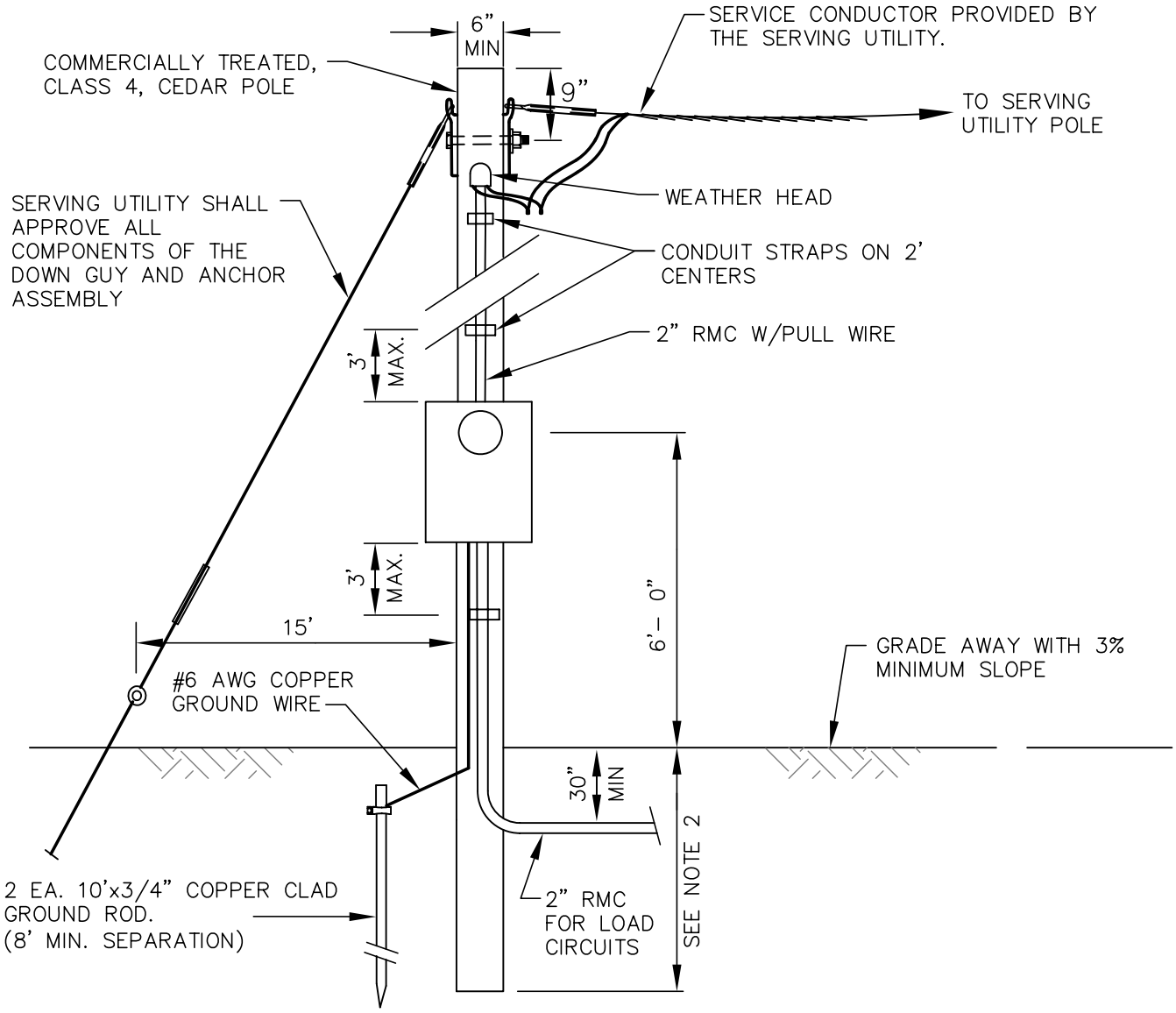

NOTES:

1. COORDINATE WITH SERVING UTILITY REGARDING SPECIFIC CONSTRUCTION REQUIREMENTS FOR SERVICE.
2. SET THE BUTT END OF TYPE 3 LOAD CENTER POLES TO THE FOLLOWING MINIMUM DEPTH:
   A. 10 PERCENT OF ITS LENGTH PLUS 2 FEET, OR 5 FEET, WHICHEVER IS GREATER, IF IT IS INSTALLED IN EARTH OTHER THAN SOLID ROCK OR MUSKEG.
   B. 10 PERCENT OF ITS LENGTH, OR 4 FEET, WHICHEVER IS GREATER, IF IT IS INSTALLED IN SOLID ROCK.
   C. CONSIDER MUSKEG TO BE AIR, AND SET THE BUT ENDS TO THE DEPTH GIVEN IN A OR B, WHICHEVER APPLIES, IN THE UNDERLYING EARTH OR ROCK.
3. WHENEVER MORE THAN TWO FEET OF EARTH OVERLAYS ROCK, OR THE DIAMETER OF THE DRILLED HOLE IN ROCK EXCEEDS TWICE THE DIAMETER OF THE POLE AT THE GROUND LINE, CONSIDER THE INSTALLATION AS EARTH.

MUNICIPALITY OF ANCHORAGE	SCALE: NTS APPROVED: REVISED: 7/08	POST MOUNTED LOAD CENTER TYPE 3	SECTION # 80.14 DETAIL # 80–34

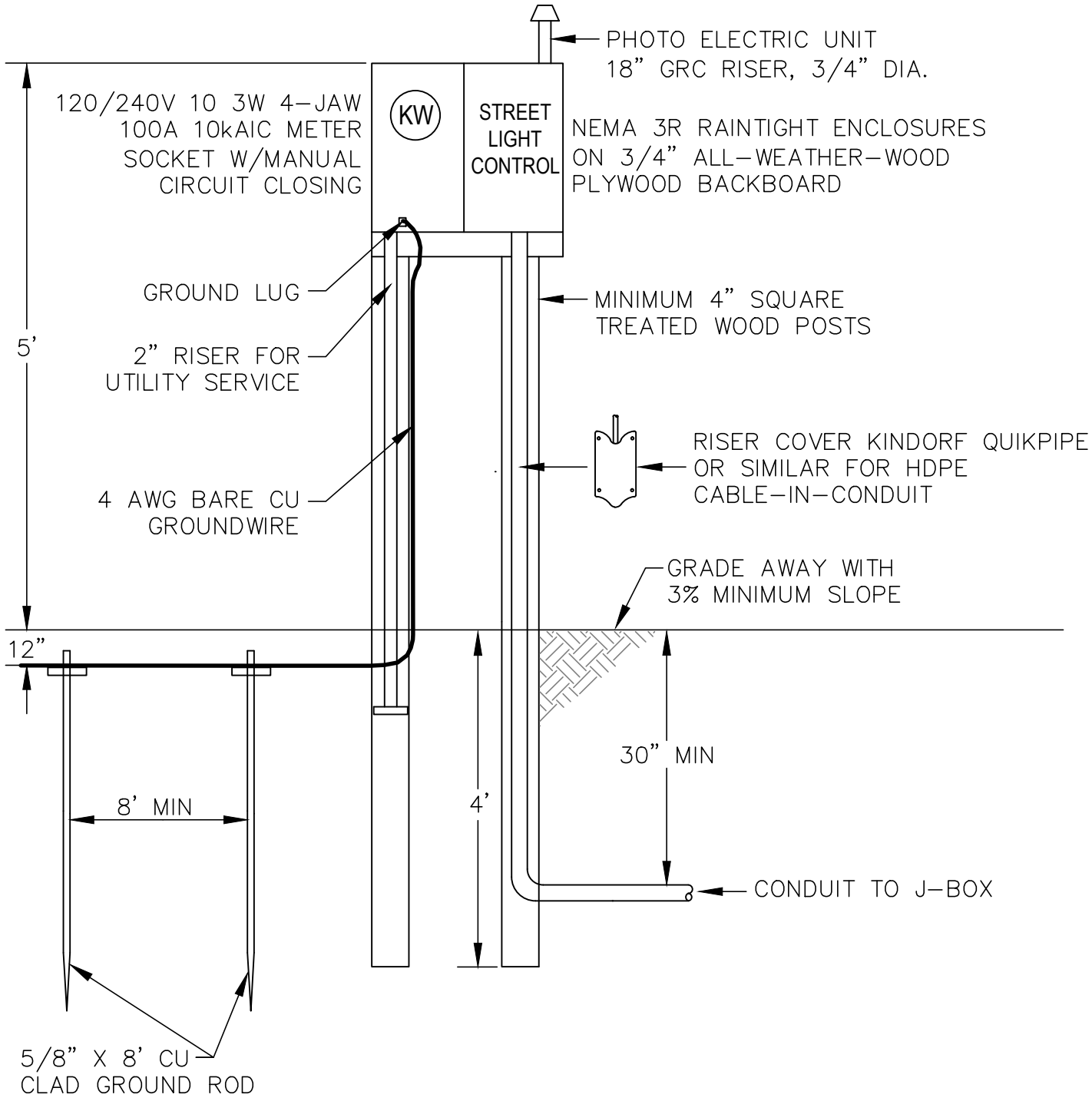

NOTES:

1. ATTACH GROUND WIRE TO POLE AT 12" INTERVALS.
2. LOCATE OUT OF DITCH LINE, 5 FT. MINIMUM FROM BACK OF CURB.
3. COORDINATE WITH SERVING UTILITY REGARDING SPECIFIC CONSTRUCTION REQUIREMENTS FOR SERVICE.
4. MARK CONTROL PANEL TO WARN QUALIFIED PERSONS OF POTENTIAL ELECTRIC ARC FLASH HAZARDS DURING EXAMINATION, ADJUSTMENT, SERVICING AND/OR MAINTENANCE OF EQUIPMENT. MARKING MUST BE CLEARLY VISIBLE.

MUNICIPALITY OF ANCHORAGE	SCALE: NTS APPROVED: REVISED: 11/14	POST MOUNTED LOAD CENTER - TYPE 2	SECTION # 80.14 DETAIL # 80-35

REVISION: 11/14 COMPLETELY NEW DESIGN

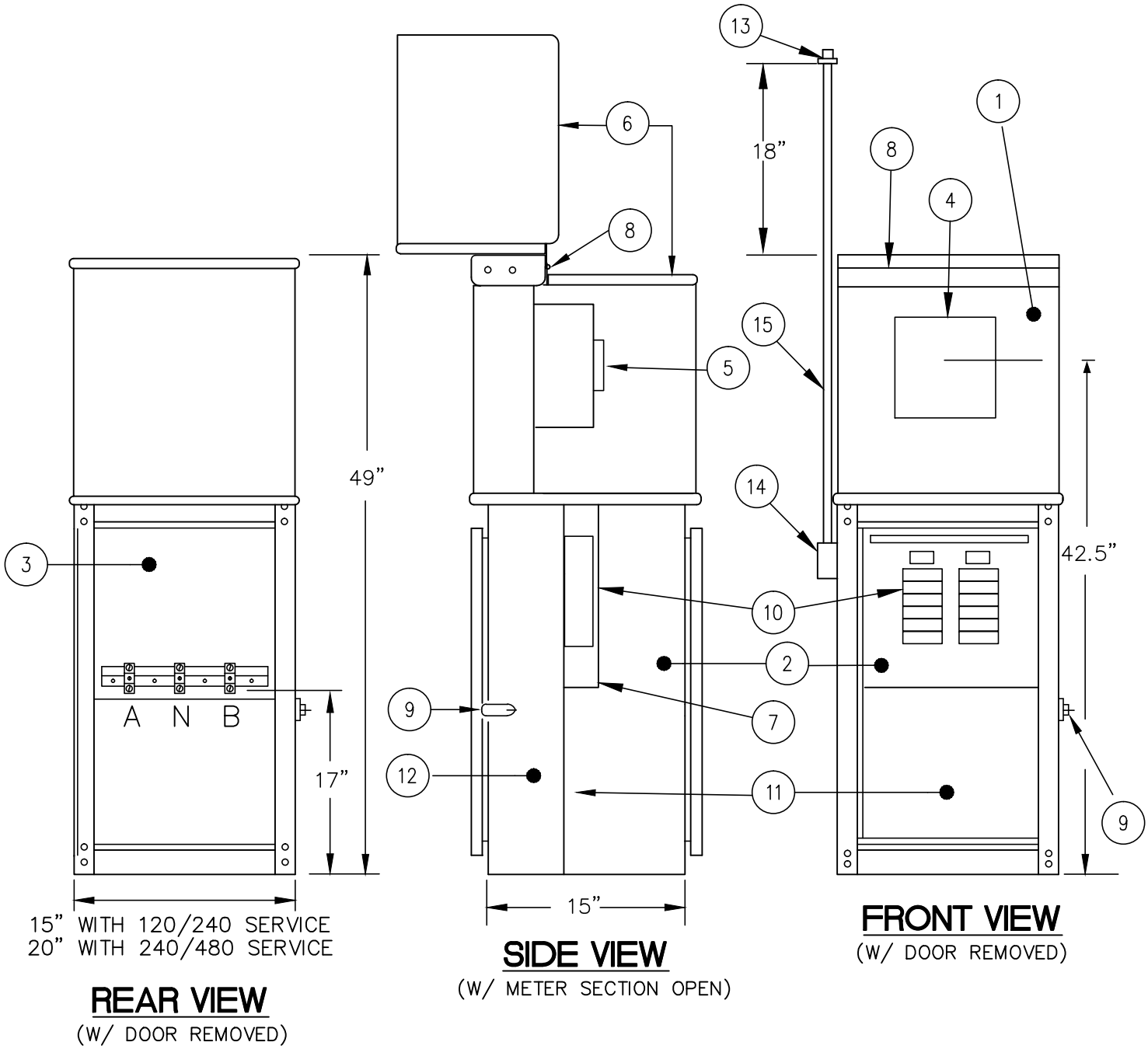

EQUIPMENT LEGEND/DESCRIPTION

1. METERING SECTION
2. LOAD SECTION
3. UTILITY CONNECTION AND TEST BLOCK SECTION
4. METER READING WINDOW (8"X8")
5. METER SOCKET W/BYPASS & SAFETY SOCKET
6. LIFT AWAY METER SECTION COVER
7. DEADFRONT
8. STAINLESS STEEL PIN HINGE
9. PADLOCKING PROVISIONS
10. DISTRIBUTION PANEL W/ MAIN BREAKER
11. ACCESSORY MOUNTING EQUIPMENT AREA
12. SERVICE PULL SECTION
13. PHOTOCELL
14. WEATHERTIGHT LB
15. 3/4" GRC CONDUIT, STRAP ON 24" CENTERS

MUNICIPALITY OF ANCHORAGE	SCALE: NTS APPROVED: REVISED: 11/14	LOAD CENTER ENCLOSURE TYPE 1A	SECTION # 80.14 DETAIL # 80–36

REVISION: 11/14 ADDED ITEMS 13., 14., & 15.

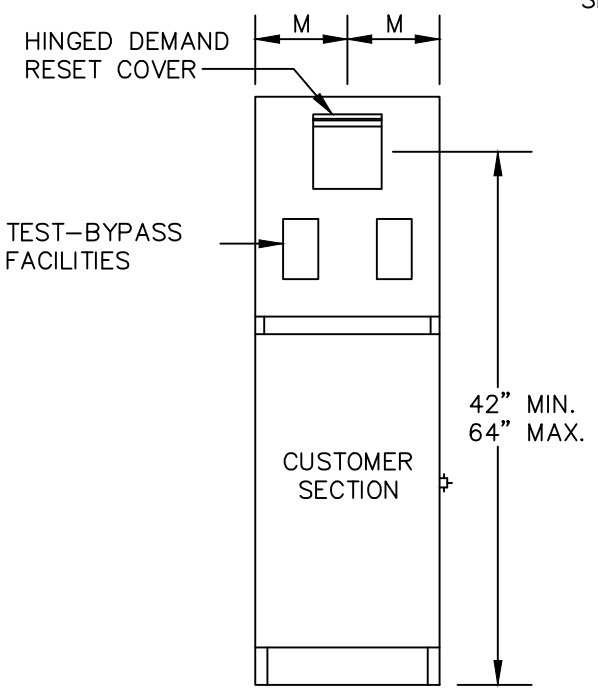

FRONT VIEW

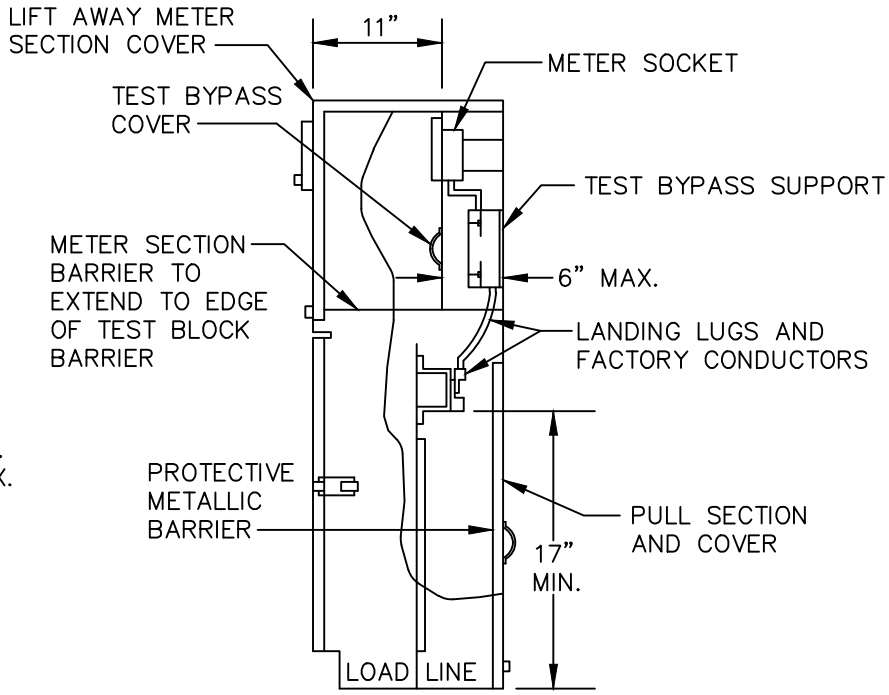

SIDE VIEW

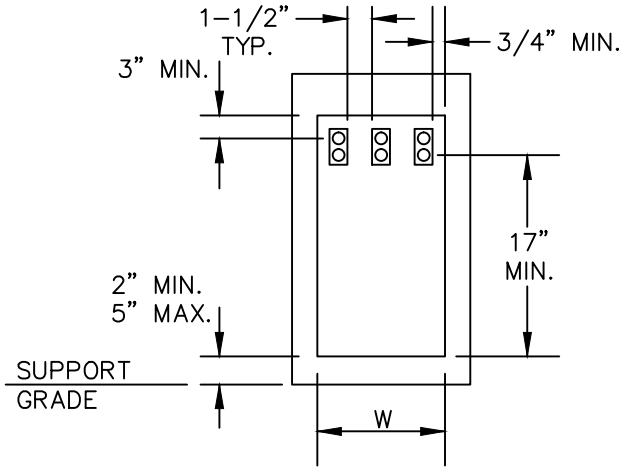

WIREWAY PULL SECTION

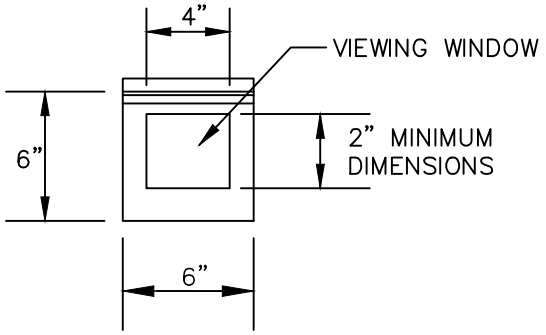

HINGED DEMAND RESET
WITH POLYCARBONATE VIEWING

MINIMUM DIMENSIONS

SERVICE	W	A
1 PHASE	10-1/2"	10"
3 PHASE	12-1/2"	

REVISION: 11/14 TITLE CHANGE ONLY

MUNICIPALITY OF ANCHORAGE	SCALE: NTS APPROVED: REVISED: 11/14	LOAD CENTER ENCLOSURE TYPE 1	SECTION # 80.14 DETAIL # 80-37

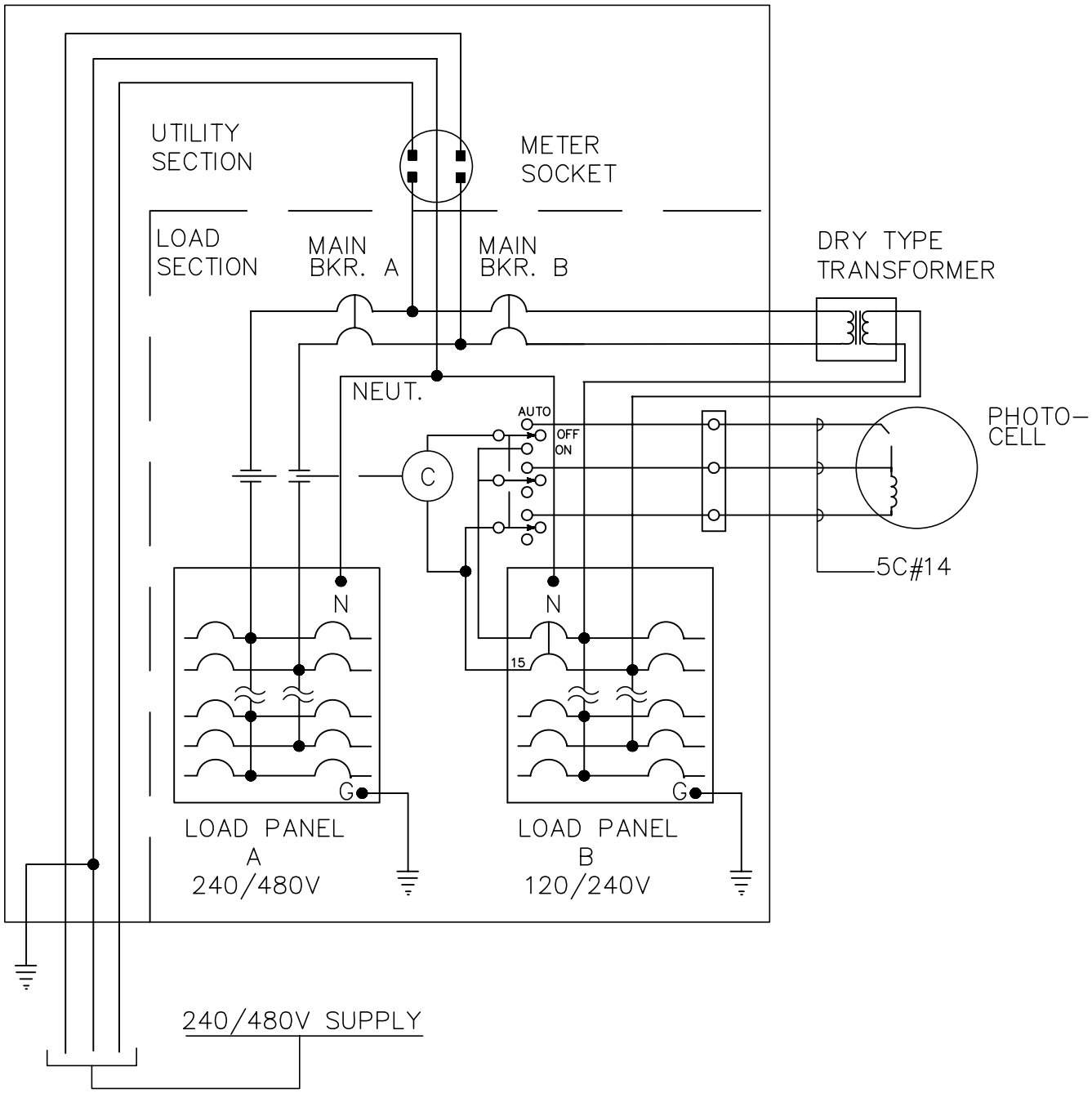

NOTE:

1. SEE PANEL SCHEDULE, STANDARD DETAIL 80-39

MUNICIPALITY OF ANCHORAGE	SCALE: NTS APPROVED: REVISED: 10/07	**LOAD CENTER WIRING DIAGRAM "A"**	SECTION # 80.14 DETAIL # 80-38

LOAD CENTER NO. _____ TYPE _____

LOCATION _____

240/480 VOLTS, SINGLE PHASE, _____ AMP SUPPLY

_____ AMPS INTERRUPTING CURRENT

MAIN BREAKER A : 2 POLE, _____ AMPS, 480 VOLTS

MAIN BREAKER B : 2 POLE, _____ AMPS, 240 VOLTS

CONTACTOR RATING: _____ AMPS

TRANSFORMER RATING: 120/240–240/480., _____ KVA

PANEL A — 240/480 VOLTS — SINGLE PHASE 3 WIRE

_____ AMPS MAIN LUGS, _____ AMPS INTERRUPT CAPACITY

CKT. DESCRIPTION	KVA	AMP			AMP	KVA	CKT. DESCRIPTION
			1	2			
			3	4			
			5	6			
			7	8			
			9	10			
			11	12			
			13	14			
			15	16			
			17	18			
			19	20			

PANEL B — 120/240 VOLTS — SINGLE PHASE 3 WIRE

_____ AMPS MAIN LUGS, _____ AMPS INTERRUPT CAPACITY

CKT. DESCRIPTION	KVA	AMP			AMP	KVA	CKT. DESCRIPTION
PHOTO CELL	0.1	15	1	2			
↓	↓	↓	3	4			
			5	6			
			7	8			
			9	10			
			11	12			
			13	14			
			15	16			
			17	18			
			19	20			

NOTE: SEE CONSTRUCTION DRAWINGS FOR NUMBER & SIZE OF BREAKERS.

MUNICIPALITY OF ANCHORAGE	SCALE: NTS APPROVED: REVISED: 10/07	**PANEL SCHEDULE FOR WIRING DIAGRAM "A"**	SECTION # 80.14 DETAIL # 80–39

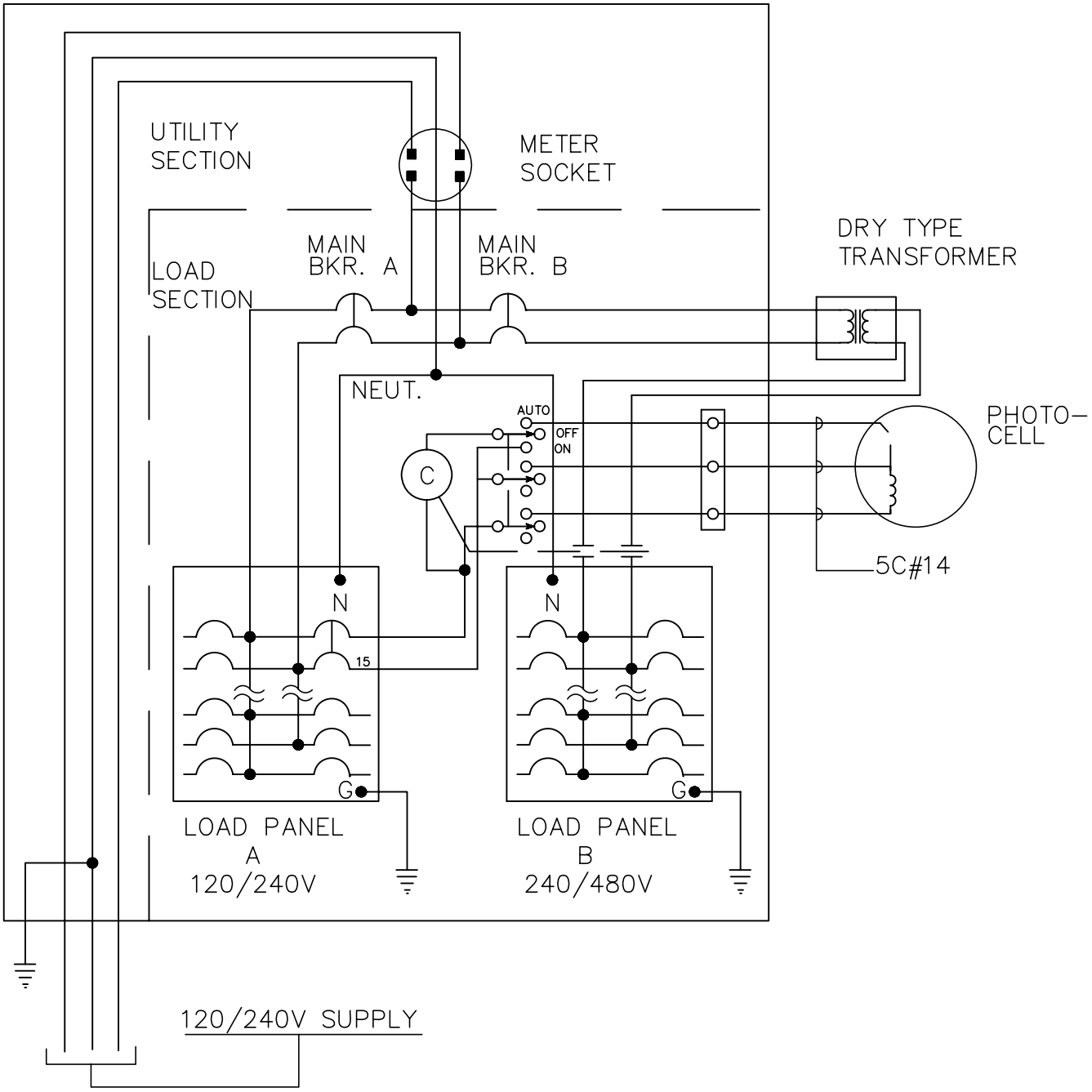

NOTE:

1. SEE PANEL SCHEDULE, STANDARD DETAIL 80-41

MUNICIPALITY OF ANCHORAGE	SCALE: NTS APPROVED: REVISED: 10/07	**LOAD CENTER WIRING DIAGRAM "B"**	SECTION # 80.14 DETAIL # 80-40

LOAD CENTER NO. _____ TYPE _____

LOCATION _____

120/240 VOLTS, SINGLE PHASE, _____ AMP SUPPLY

_____ AMPS INTERRUPTING CURRENT

MAIN BREAKER A : 2 POLE, _____ AMPS, 240 VOLTS

MAIN BREAKER B : 2 POLE, _____ AMPS, 480 VOLTS

CONTACTOR RATING: _____ AMPS,

TRANSFORMER RATING: 120/240–240/480., _____ KVA

PANEL A — 120/240 VOLTS — SINGLE PHASE 3 WIRE

_____ AMPS MAIN LUGS, _____ AMPS INTERRUPT CAPACITY

CKT. DESCRIPTION	KVA	AMP			AMP	KVA	CKT. DESCRIPTION
PHOTO CELL	0.1	15	1	2			
↓	↓	↓	3	4			
			5	6			
			7	8			
			9	10			
			11	12			
			13	14			
			15	16			
			17	18			
			19	20			

PANEL B — 240/480 VOLTS — SINGLE PHASE 3 WIRE

_____ AMPS MAIN LUGS, _____ AMPS INTERRUPT CAPACITY

CKT. DESCRIPTION	KVA	AMP			AMP	KVA	CKT. DESCRIPTION
			1	2			
			3	4			
			5	6			
			7	8			
			9	10			
			11	12			
			13	14			
			15	16			
			17	18			
			19	20			

NOTE: SEE CONSTRUCTION DRAWINGS FOR NUMBER & SIZE OF BREAKERS.

MUNICIPALITY OF ANCHORAGE	SCALE: NTS APPROVED: REVISED: 10/07	**PANEL SCHEDULE FOR WIRING DIAGRAM "B"**	SECTION # 80.14 DETAIL # 80–41

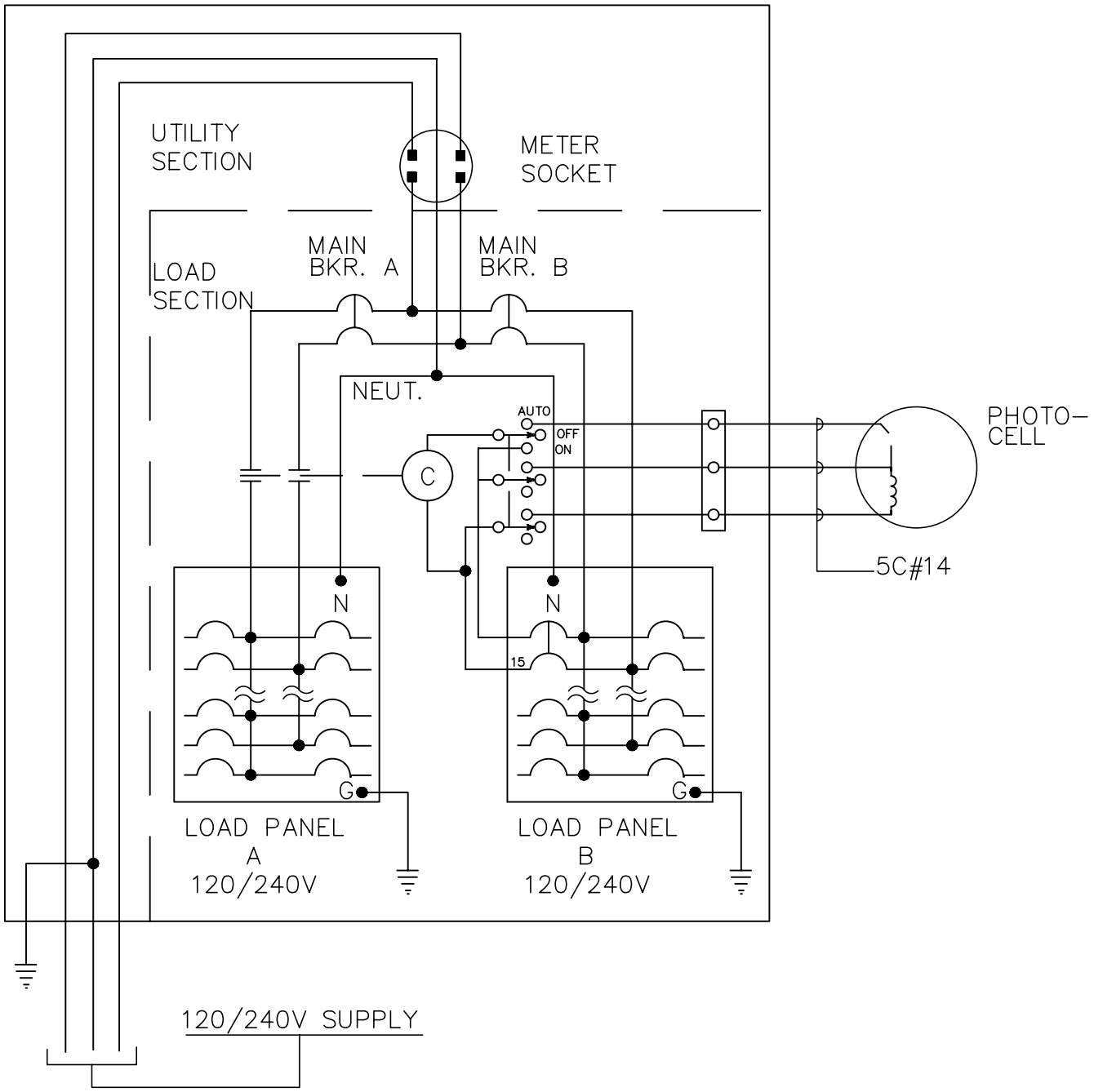

NOTE:

1. SEE PANEL SCHEDULE, STANDARD DETAIL 80-43

MUNICIPALITY OF ANCHORAGE	SCALE: NTS APPROVED: REVISED: 10/07	**LOAD CENTER WIRING DIAGRAM "C"**	SECTION # 80.14 DETAIL # 80-42

LOAD CENTER NO. _____ TYPE _____

LOCATION _____

120/240 VOLTS, SINGLE PHASE, _____ AMP SUPPLY

_____ AMPS INTERRUPTING CURRENT

MAIN BREAKER A : 2 POLE, _____ AMPS, 240 VOLTS

MAIN BREAKER B : 2 POLE, _____ AMPS, 240 VOLTS

CONTACTOR RATING: _____ AMPS, 240 VOLTS

PANEL A — 120/240 VOLTS — SINGLE PHASE 3 WIRE

_____ AMPS MAIN LUGS, _____ AMPS INTERRUPT CAPACITY

CKT. DESCRIPTION	KVA	AMP			AMP	KVA	CKT. DESCRIPTION
				N			
			1	2			
			3	4			
			5	6			
			7	8			
			9	10			
			11	12			
			13	14			
			15	16			
			17	18			
			19	20			

PANEL B — 120/240 VOLTS — SINGLE PHASE 3 WIRE

_____ AMPS MAIN LUGS, _____ AMPS INTERRUPT CAPACITY

CKT. DESCRIPTION	KVA	AMP			AMP	KVA	CKT. DESCRIPTION
				N			
PHOTO CELL	0.1	15	1	2			
↓	↓	↓	3	4			
			5	6			
			7	8			
			9	10			
			11	12			
			13	14			
			15	16			
			17	18			
			19	20			

NOTE: SEE CONSTRUCTION DRAWINGS FOR NUMBER & SIZE OF BREAKERS.

MUNICIPALITY OF ANCHORAGE	SCALE: NTS APPROVED: REVISED: 10/07	**PANEL SCHEDULE FOR WIRING DIAGRAM "C"**	SECTION # 80.14 DETAIL # 80–43

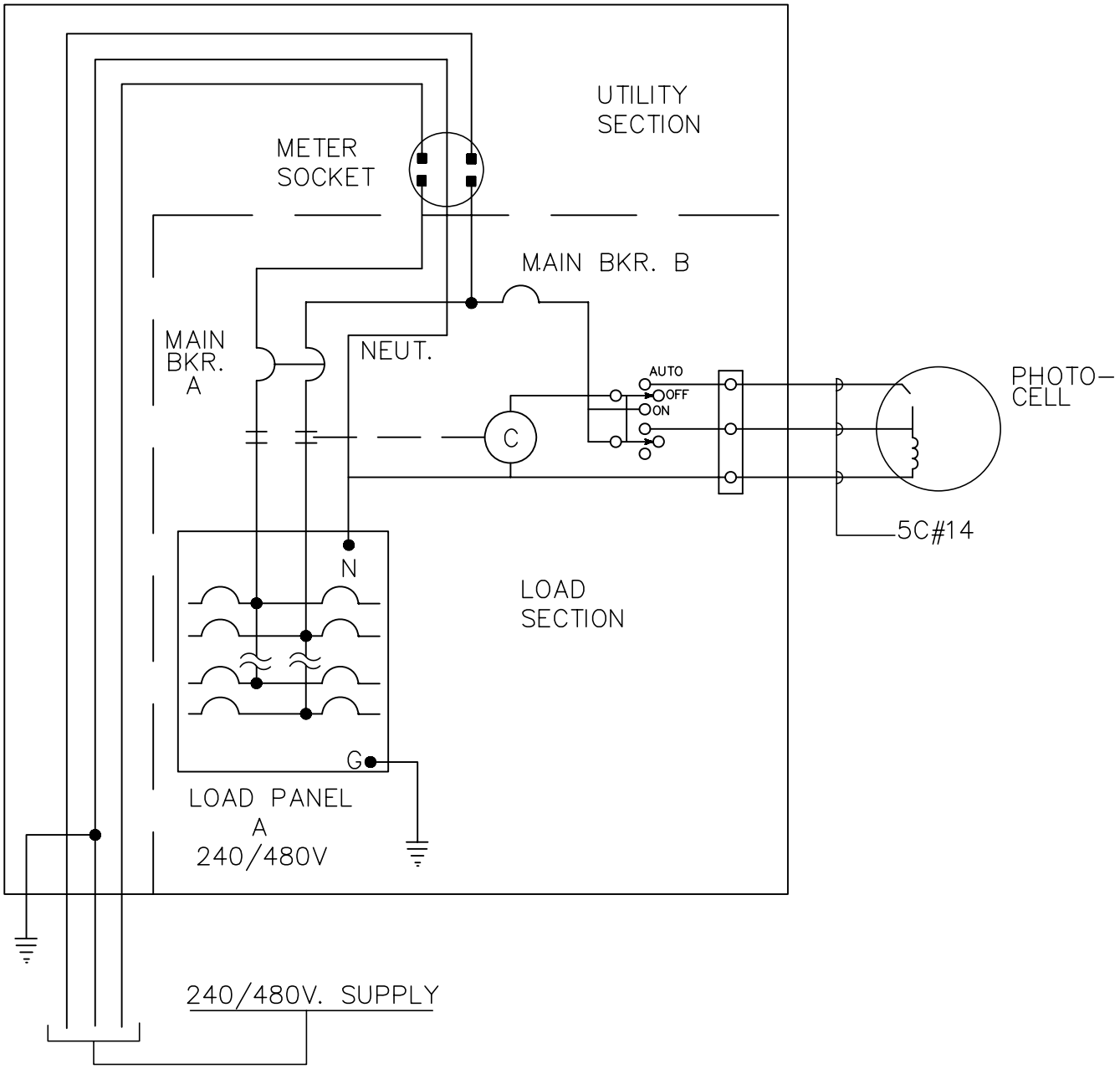

NOTE:

1. SEE PANEL SCHEDULE, STANDARD DETAIL 80-45

MUNICIPALITY OF ANCHORAGE	SCALE: NTS APPROVED: REVISED: 10/07	**LOAD CENTER WIRING DIAGRAM "D"**	SECTION # 80.14 DETAIL # 80-44

LOAD CENTER NO. _____ TYPE _____

LOCATION _____

240/480 VOLTS, SINGLE PHASE, _____ AMP SUPPLY

_____ AMPS INTERRUPTING CURRENT

MAIN BREAKER A : 2 POLE, _____ AMPS, 480 VOLTS

MAIN BREAKER B : 1 POLE, 15 AMPS, 240 VOLTS

CONTACTOR RATING: _____ AMPS, 240 VOLTS

PANEL A 240/480 VOLTS SINGLE PHASE 3 WIRE

_____ AMPS MAIN LUGS, _____ AMPS INTERRUPT CAPACITY

CKT. DESCRIPTION	KVA	AMP				AMP	KVA	CKT. DESCRIPTION
				N				
			1		2			
			3		4			
			5		6			
			7		8			
			9		10			
			11		12			
			13		14			
			15		16			
			17		18			
			19		20			

NOTE: SEE CONSTRUCTION DRAWINGS FOR NUMBER & SIZE OF BREAKERS.

MUNICIPALITY OF ANCHORAGE	SCALE: NTS APPROVED: REVISED: 10/07	PANEL SCHEDULE FOR WIRING DIAGRAM "D"	SECTION # 80.14 DETAIL # 80–45

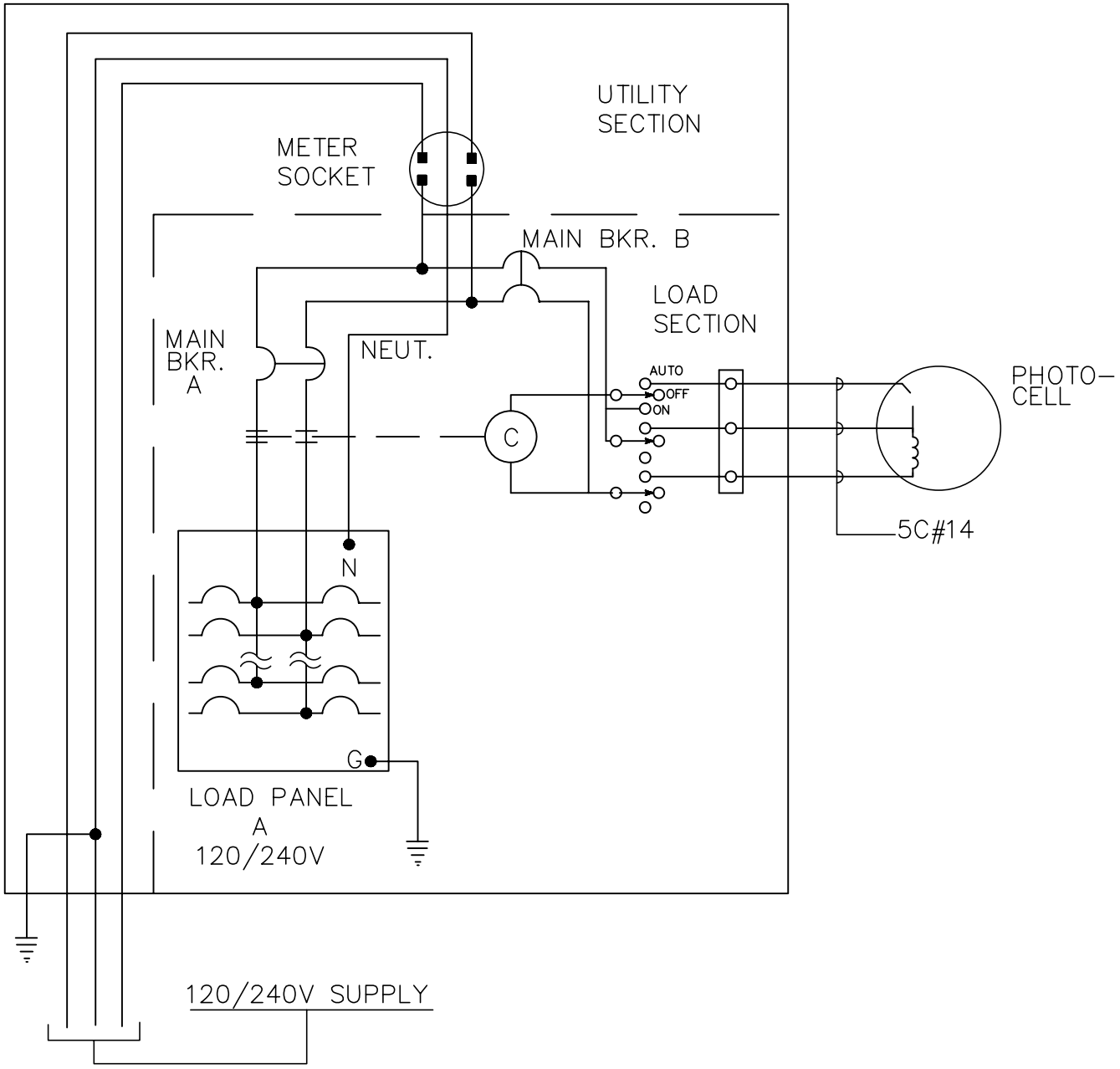

NOTE:

1. SEE PANEL SCHEDULE, STANDARD DETAIL 80-47

MUNICIPALITY OF ANCHORAGE	SCALE: NTS APPROVED: REVISED: 10/07	**LOAD CENTER WIRING DIAGRAM "E"**	SECTION # 80.14 DETAIL # 80-46

LOAD CENTER NO. _____ TYPE: _____

LOCATION: _____

120/240 VOLTS, SINGLE PHASE, _____ AMP SUPPLY

_____ AMPS INTERRUPTING CURRENT

MAIN BREAKER A : 2 POLE, _____ AMPS, 240 VOLTS

MAIN BREAKER B : 2 POLE, 15 AMPS, 240 VOLTS

CONTACTOR RATING: _____ AMPS

PANEL A 120/240 VOLTS SINGLE PHASE 3 WIRE

_____ AMPS MAIN LUGS, _____ AMPS INTERRUPT CAPACITY

CKT. DESCRIPTION	KVA	AMP			AMP	KVA	CKT. DESCRIPTION
			1	2			
			3	4			
			5	6			
			7	8			
			9	10			
			11	12			
			13	14			
			15	16			
			17	18			
			19	20			

N

NOTE: SEE CONSTRUCTION DRAWINGS FOR NUMBER & SIZE OF BREAKERS.

MUNICIPALITY OF ANCHORAGE	SCALE: NTS APPROVED: REVISED: 10/07	PANEL SCHEDULE FOR WIRING DIAGRAM "E"	SECTION # 80.14 DETAIL # 80-47

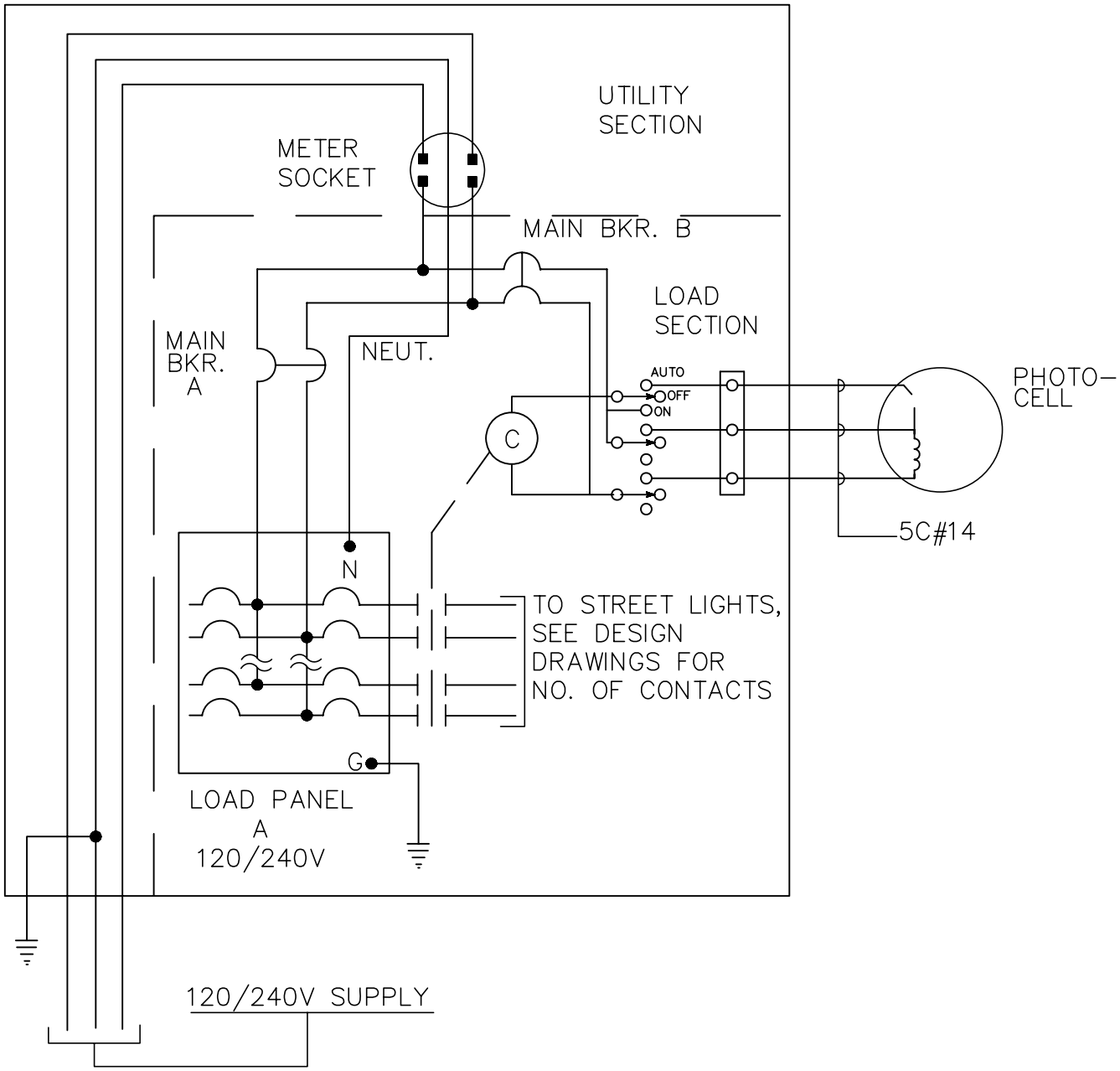

NOTE:

1. SEE PANEL SCHEDULE, STANDARD DETAIL 80-49

MUNICIPALITY OF ANCHORAGE	SCALE: NTS APPROVED: REVISED: 10/07	**LOAD CENTER WIRING DIAGRAM "F"**	SECTION # 80.14 DETAIL # 80-48

LOAD CENTER NO. _____ TYPE: _____

LOCATION: _____

_____ POLE, _____ AMP CONTACTOR

PANEL A 120/240 VOLTS SINGLE PHASE 3 WIRE

_____ AMPS MAIN LUGS, _____ AMPS INTERRUPT CAPACITY

CKT. DESCRIPTION	KVA	AMP			AMP	KVA	CKT. DESCRIPTION
			1	2			
			3	4			
			5	6			
			7	8			
			9	10			
			11	12			
			13	14			
			15	16			
			17	18			
			19	20			

N

NOTE: SEE CONSTRUCTION DRAWINGS FOR NUMBER & SIZE OF BREAKERS.

MUNICIPALITY OF ANCHORAGE	SCALE: NTS APPROVED: REVISED: 10/07	PANEL SCHEDULE FOR WIRING DIAGRAM "F"	SECTION # 80.14 DETAIL # 80-49

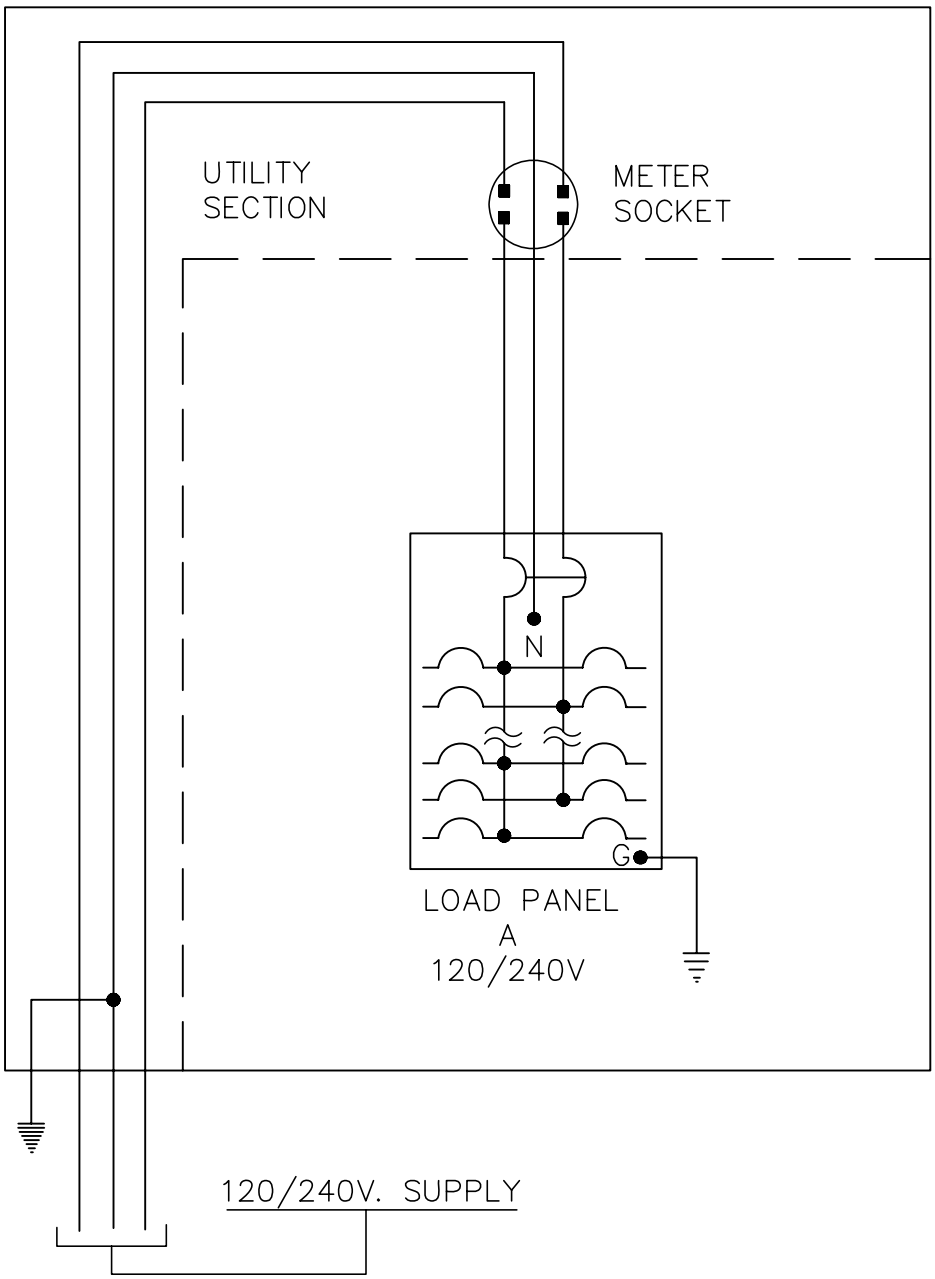

NOTE:

1. SEE PANEL SCHEDULE, DETAIL 80–51

MUNICIPALITY OF ANCHORAGE	SCALE: NTS APPROVED: REVISED: 10/07	**LOAD CENTER WIRING DIAGRAM "G"**	SECTION # 80.14 DETAIL # 80–50

LOAD CENTER NO. _____ TYPE: _____

LOCATION: _____

PANEL A 120/240 VOLTS SINGLE PHASE 3 WIRE

_____ AMPS MAIN LUGS, _____ AMPS INTERRUPT CAPACITY

CKT. DESCRIPTION	KVA	AMP			AMP	KVA	CKT. DESCRIPTION
			1	2			
			3	4			
			5	6			
			7	8			
			9	10			
			11	12			
			13	14			
			15	16			
			17	18			
			19	20			

N

MUNICIPALITY OF ANCHORAGE	SCALE: NTS APPROVED: REVISED: 10/07	PANEL SCHEDULE FOR WIRING DIAGRAM "G"	SECTION # 80.14 DETAIL # 80-51

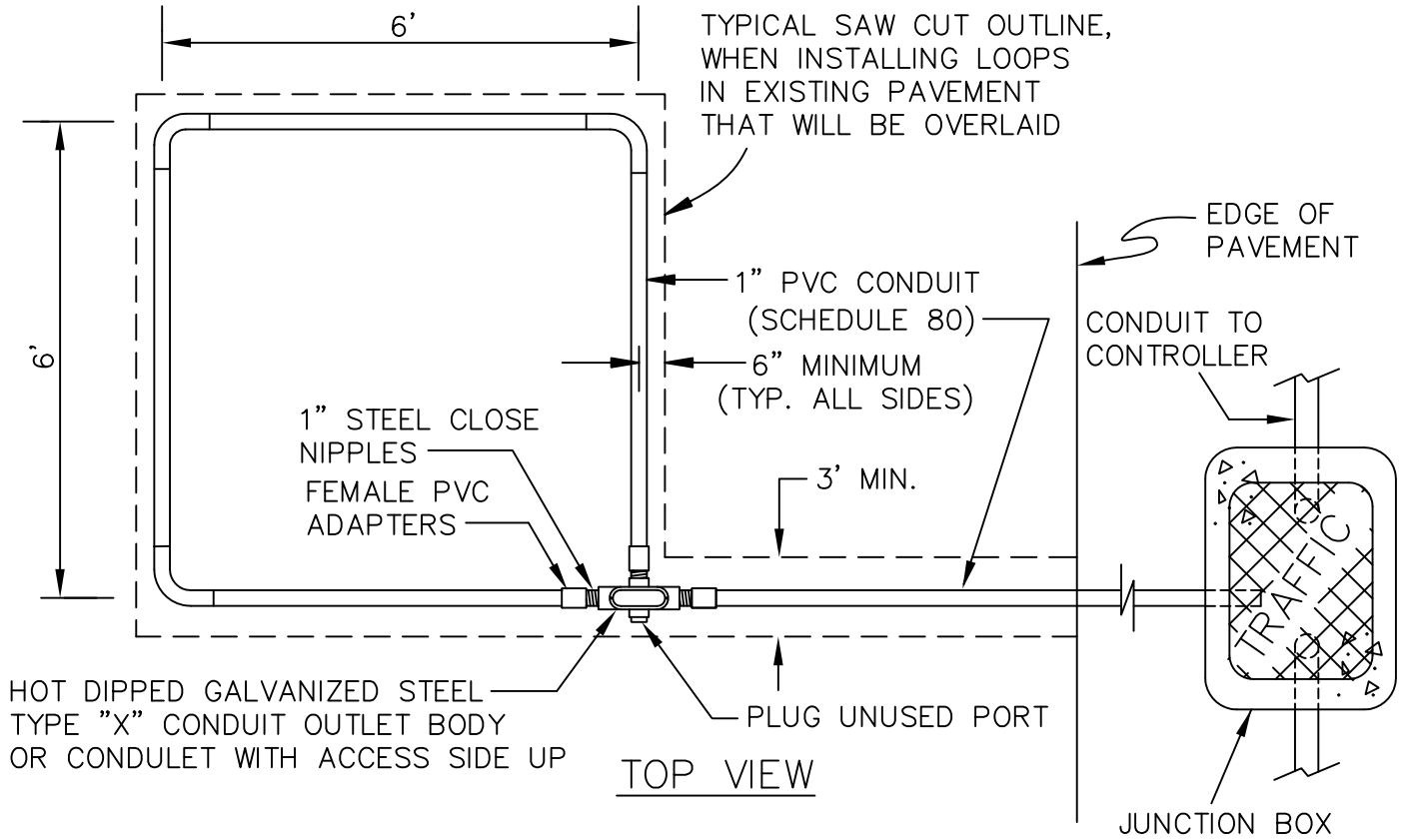

TOP VIEW

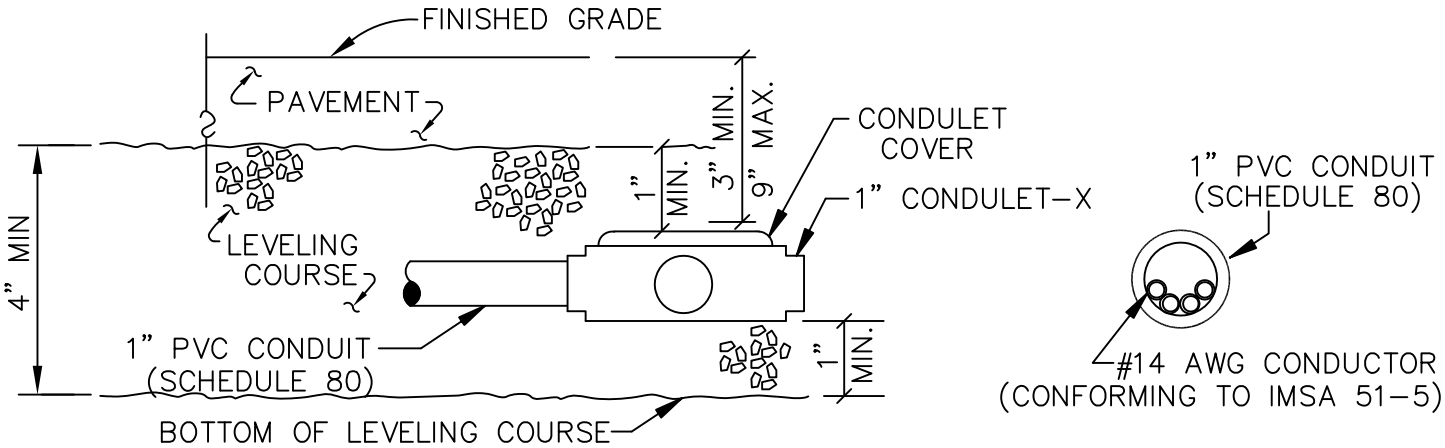

SIDE VIEW

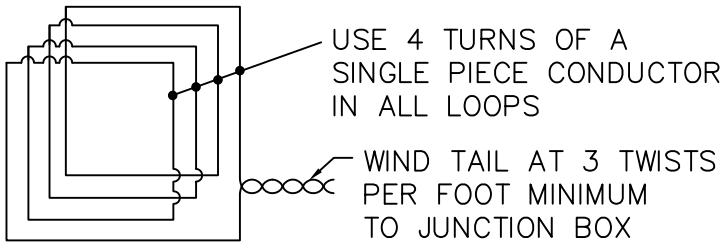

LOOP WIRING DETAIL

REVISION: 12/11 CHANGED DEPTH OF LEVELING COURSE OVER CONDULET COVER TO 1"

MUNICIPALITY OF ANCHORAGE	SCALE: NTS APPROVED: REVISED: 12/11	CONDUIT ENCASED LOOP DETECTOR	SECTION # 80.18 DETAIL # 80-52

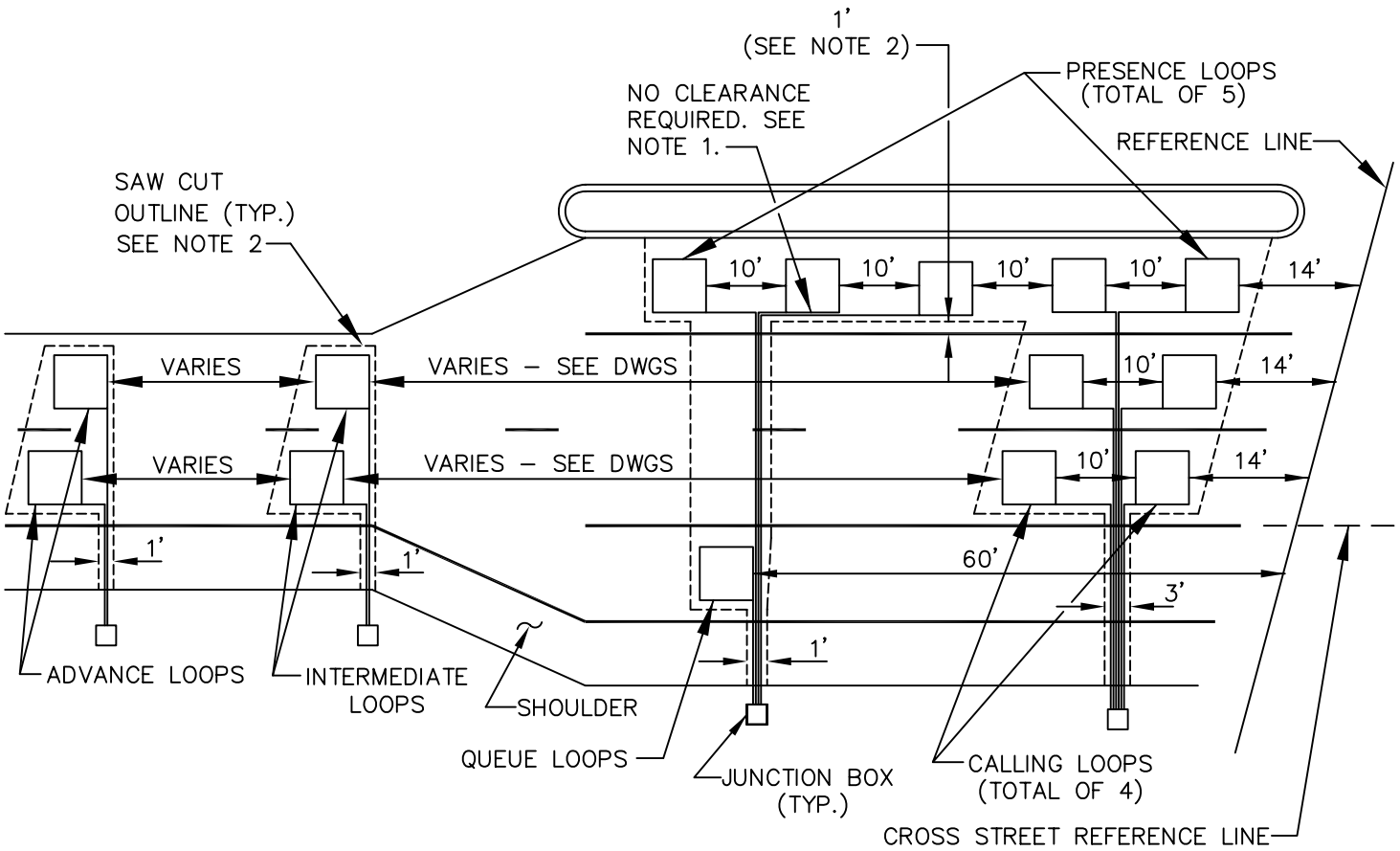

TYPICAL LOOP SETBACKS

MEASURE THE SETBACKS FROM THE REFERENCE LINE
ALONG THE CENTER OF EACH LANE

NOTES:

1. NO MINIMUM CLEARANCE IS REQUIRED BETWEEN A DETECTOR LOOP AND HOMERUN LOOP WIRES OR BETWEEN HOMERUN LOOP WIRES. HOMERUN LOOP WIRES SHALL NOT CROSS LOOP CONDUITS.
2. WHERE EXISTING PAVEMENT WILL NOT BE OVERLAID, ENCLOSE ALL LOOPS THAT ENTER A COMMON JUNCTION BOX WITHIN A TRAPEZOIDAL SAW CUT. CUT TO WITHIN 1 FOOT OF THE LANE AND EDGE LINES, PRESERVING THESE PAVEMENT MARKINGS; REMOVE THE ASPHALT TO THE LIP OF THE GUTTER WHEN THERE ARE NO EDGE LINES. CUT ACROSS LANE LINES WHEN LOOPS IN ADJACENT LANES ARE SIDE BY SIDE. CUT TRENCHES A MINIMUM OF 3 FEET WIDE WHEN INSTALLING LOOP TAILS ACROSS A LANE; CUT TRENCHES A MINIMUM 1 FOOT WIDE WHEN CROSSING A SHOULDER.

MUNICIPALITY OF ANCHORAGE	SCALE: NTS APPROVED: REVISED: 10/07	LOOP DETECTOR INSTALLATION DETAILS	SECTION # 80.18 DETAIL # 80–53

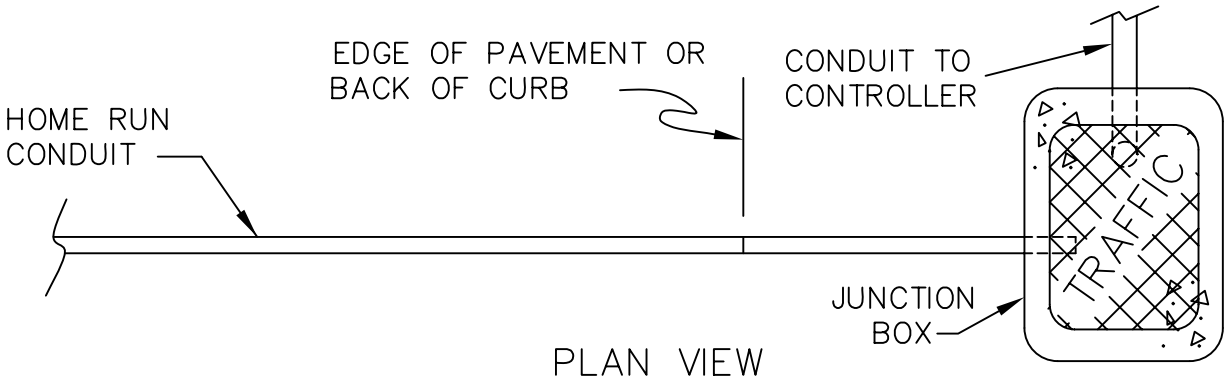

PLAN VIEW

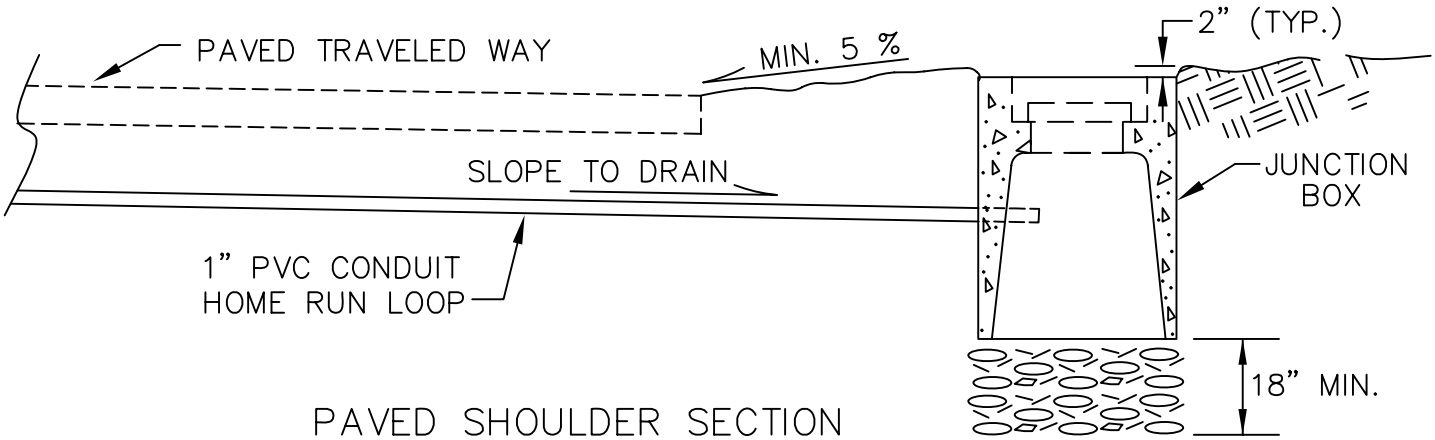

PAVED SHOULDER SECTION

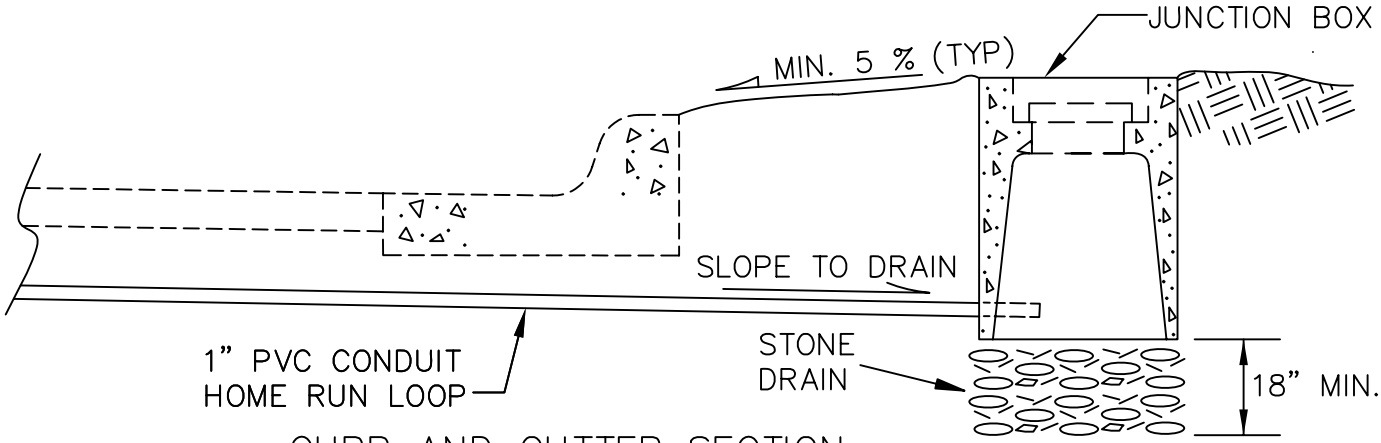

CURB AND GUTTER SECTION

MUNICIPALITY OF ANCHORAGE	SCALE: NTS APPROVED: REVISED: 5/08	**LOOP DETECTOR HOME RUN**	SECTION # 80.18 DETAIL # 80–54

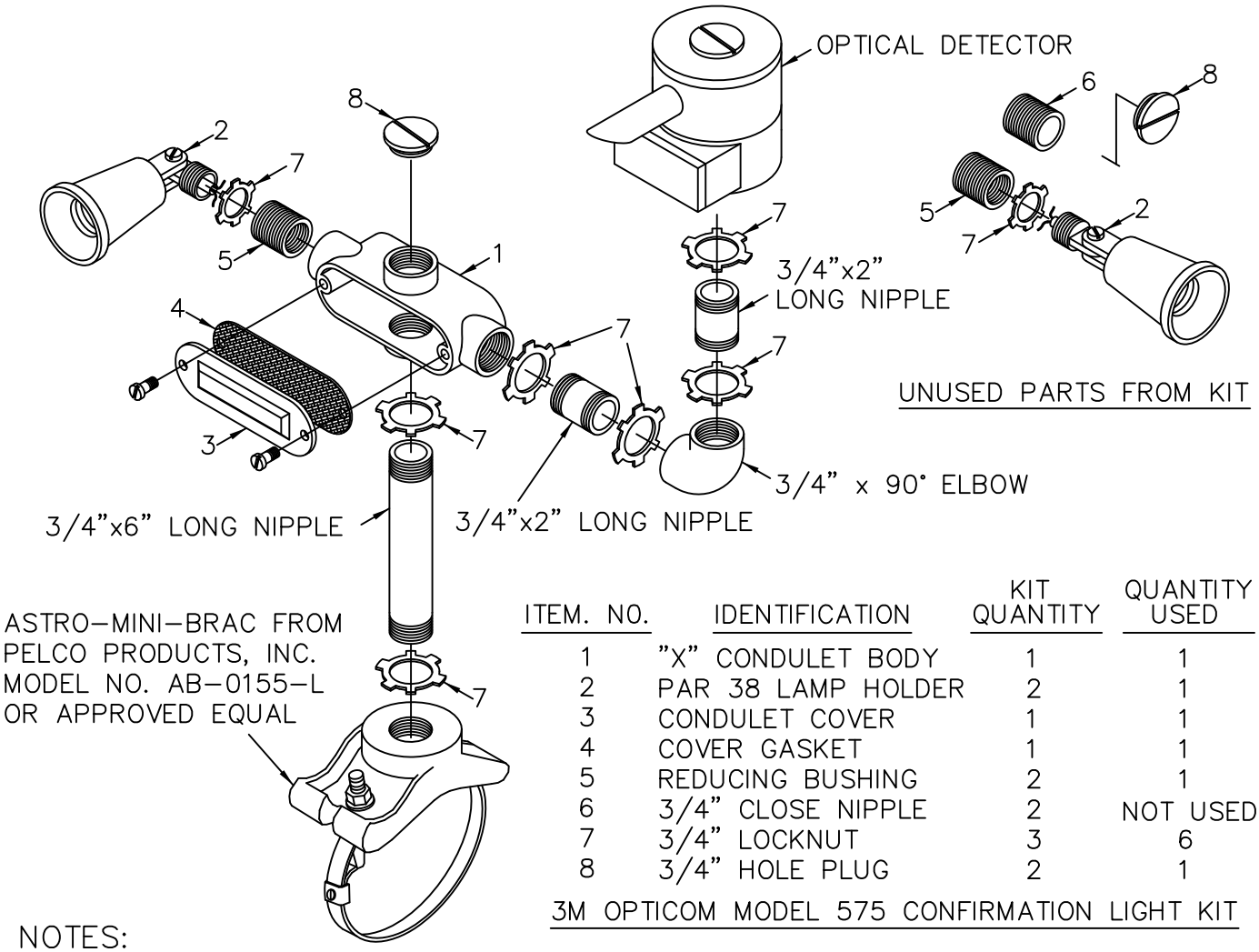

ITEM. NO.	IDENTIFICATION	KIT QUANTITY	QUANTITY USED
1	"X" CONDULET BODY	1	1
2	PAR 38 LAMP HOLDER	2	1
3	CONDULET COVER	1	1
4	COVER GASKET	1	1
5	REDUCING BUSHING	2	1
6	3/4" CLOSE NIPPLE	2	NOT USED
7	3/4" LOCKNUT	3	6
8	3/4" HOLE PLUG	2	1

3M OPTICOM MODEL 575 CONFIRMATION LIGHT KIT

NOTES:

1. SEE THE SIGNAL PLANS FOR THE SIGNAL MAST ARMS SCHEDULED FOR OPTICOM DETECTOR INSTALLATION.
2. FOR EACH OPTICOM INSTALLATION, FURNISH THE FOLLOWING PARTS:
   A. A 3M MODEL 711, 721, OR 722 OPTICOM DETECTOR AS SHOWN ON THE PLANS.
   B. A 3M MODEL 575 CONFIRMATION LIGHT KIT, OR AN APPROVED EQUAL, THAT CONSISTS OF STEEL PARTS WITH A HOT DIP GALVANIZED FINISH.
   C. A 3/4"x6" LONG PIPE NIPPLE, TWO 3/4"X2" LONG NIPPLES, AND A 3/4" 90° PIPE ELBOW. FURNISH PARTS WITH A HOT DIPPED GALVANIZED FINISH.
   D. THREE ADDITIONAL 3/4" LOCKNUTS WITH ZINC PLATED FINISH.
   E. AN ASTRO-MINI-BRAC, MODEL AB-0155-L, MANUFACTURED BY PELCO PRODUCTS, OR AN APPROVED EQUAL.
   F. A 60 WATT, PAR 38, HALOGEN FLOOP LAMP RATED FOR 130 VOLT OPERATION, 1150 INITIAL LUMENS, AND A 3000 HOUR LAMP LIFE.
3. DRILL A 1" HOLE IN THE TOP DEAD CENTER OF THE MAST ARM AT THE OPTICOM DETECTORS PRE-APPROVED LATERAL LOCATION. ASSEMBLE THE PARTS AS SHOWN ON THIS SHEET.
4. BEFORE ATTACHING THE MODEL 138 DETECTOR CABLE TO THE OPTICOM DETECTOR, STRIP THE INSULATION FROM THE THREE INSULATED CONDUCTORS AT THE CONTROLLER CABINET AND ATTACH ALL FOUR CONDUCTORS TO GROUND.

REVISION: 2/2012 DELETED PART 6 & REPLACED WITH TWO 3/4"X2" LONG NIPPLES.

MUNICIPALITY OF ANCHORAGE	SCALE: NTS APPROVED: REVISED: 2/12	OPTICOM DETECTOR INSTALLATION DETAILS	SECTION # 80.18 DETAIL # 80-55

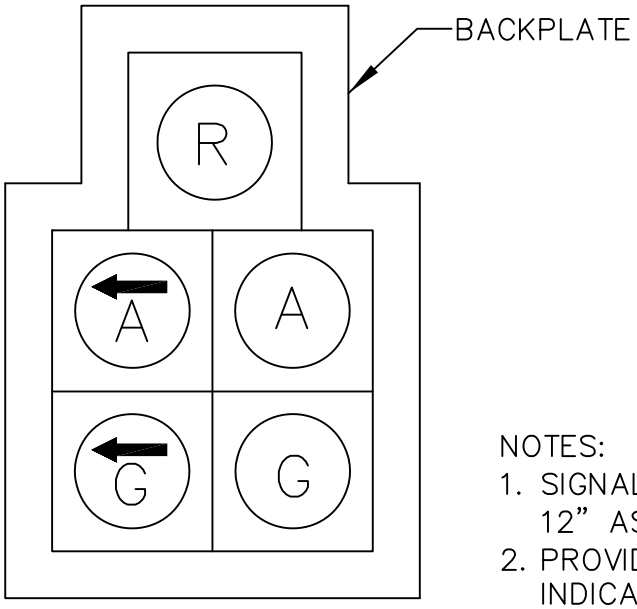

5–LENS HEAD

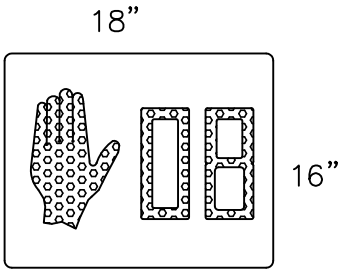

PEDESTRIAN HEAD

NOTES:

1. SIGNAL FACE DIMENSIONS ARE 8" OR 12" AS SPECIFIED IN THE DRAWINGS.
2. PROVIDE LEFT/RIGHT ARROW INDICATIONS, AS INDICATED IN THE CONTRACT DOCUMENTS.
3. ALL VEHICLE SIGNALS SHALL HAVE BACKPLATES.

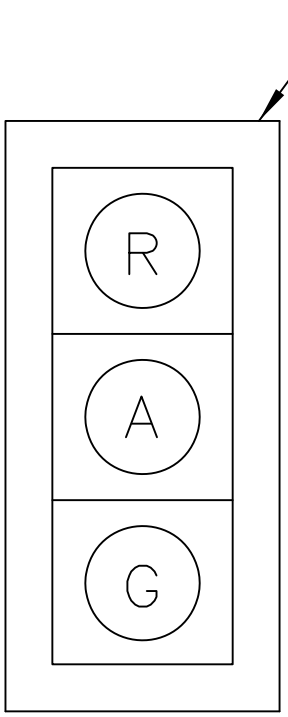

3–LENS HEAD

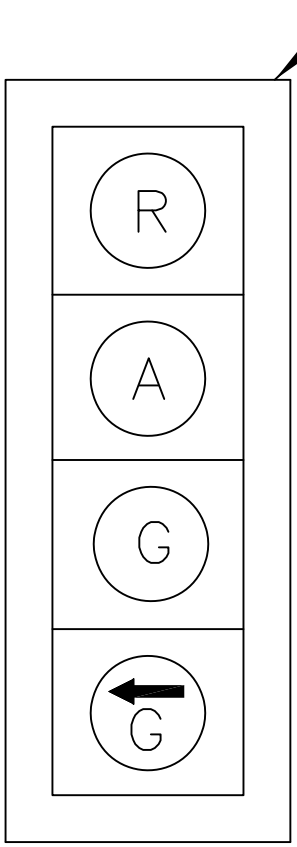

4–LENS HEAD

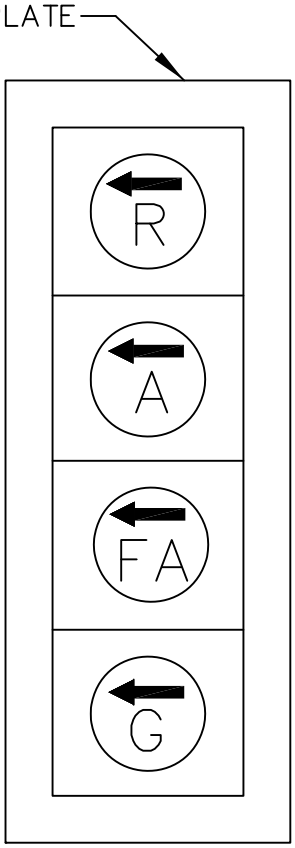

FLASHING YELLOW HEAD

REVISION: 11/2011 FIXED RED IN 5–SECTION HEAD, ADDED FLASHING YELLOW HEAD

MUNICIPALITY OF ANCHORAGE	SCALE: NTS APPROVED: REVISED: 11/11	SIGNAL HEADS	SECTION # 80.19 & 80.20 DETAIL # 80–56

SCHOOL FLASHER NOTES:

1. EACH FLASHER SHALL CONSIST OF FOUR SIGNAL FACES WITH YELLOW LENSES AND TUNNEL TYPE VISORS WITH OPEN SLOTS AT THE BOTTOM.
2. THE CONTRACTOR SHALL WIRE SIGNAL FACES 1 AND 2 ON FLASHER CIRCUIT 1 AND SIGNAL FACES 3 AND 4 ON FLASHER CIRCUIT 2.
3. BEACON FRAMEWORK

ITEM NO.	IDENTIFICATION	QTY.
A	1-1/2" 90° SERRATED ELBOW	2
B	1-1/2" TEE	1
C	1-1/2" x VARIES NIPPLE	1
D	1-1/2" x VARIES NIPPLE	2
E	1-1/2" LOCK NIPPLE	2

4. YELLOW SIGNAL FACE:
   12" (POSTED SPEEDS ≥ 40 MPH)
   8" (POSTED SPEEDS ≤ 30 MPH)
   FOR 35 mph SIGNAL FACE SIZE REQUIRES DISCRETION OF ENGINEER.

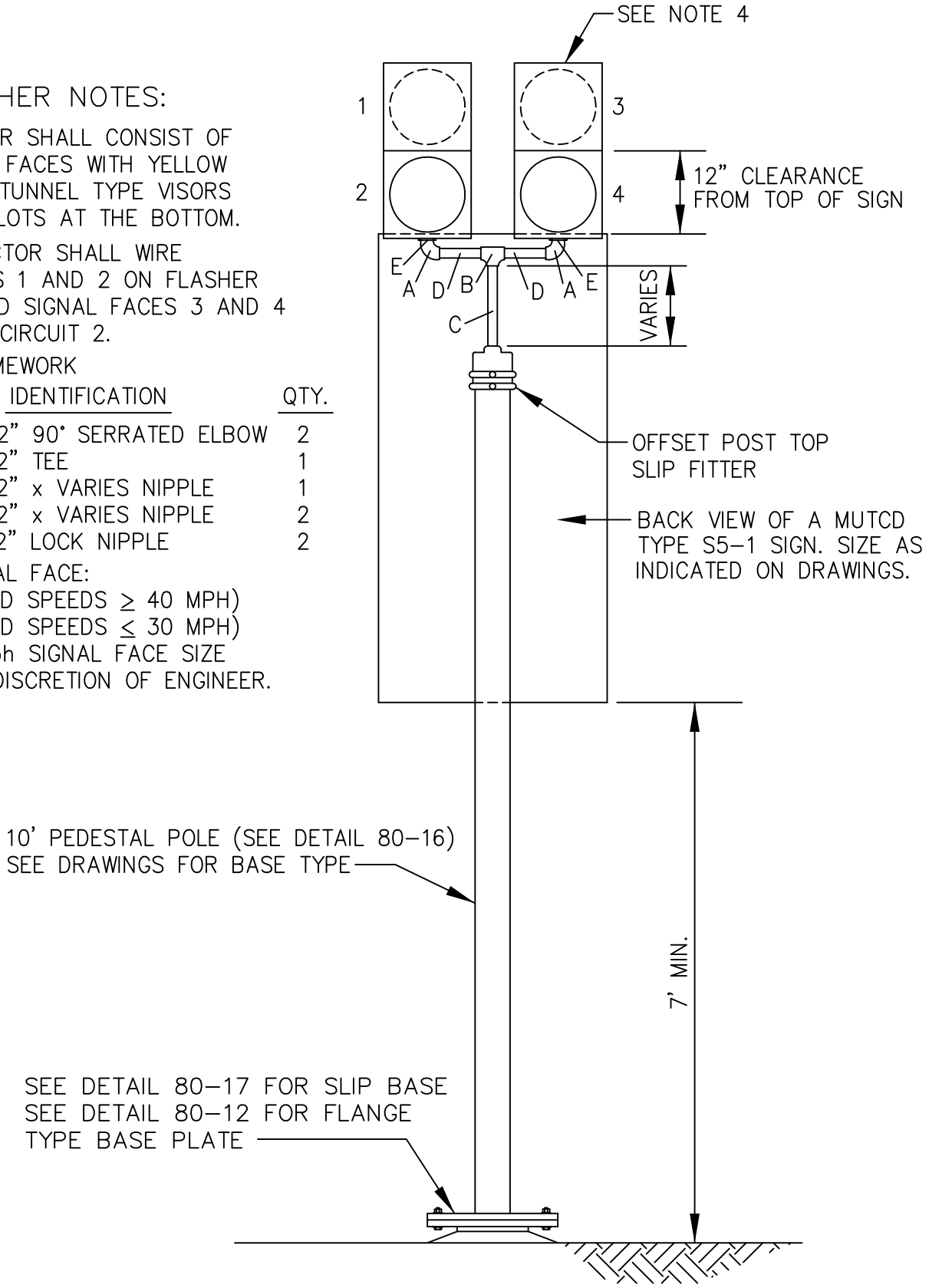

REVISION: 2/2012 REMOVED 12" HEAD LANGUAGE IN NOTE 1.

MUNICIPALITY OF ANCHORAGE	SCALE: NTS APPROVED: REVISED: 2/12	SPEED LIMIT SIGN BEACON	SECTION # 80.22 DETAIL # 80-57

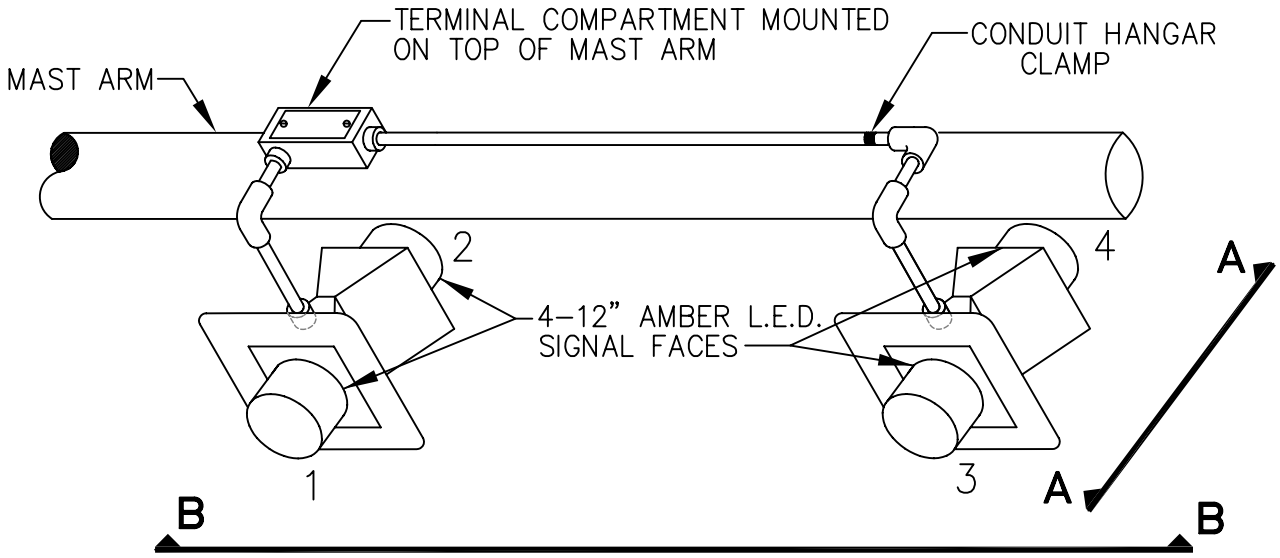

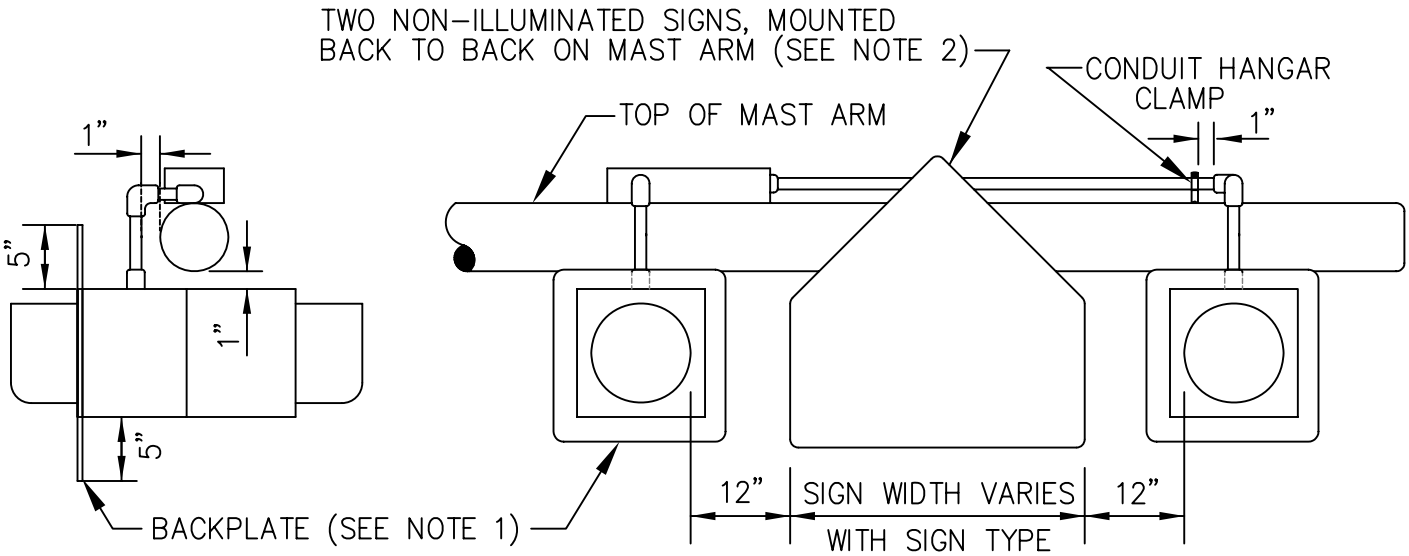

SECTION AA

SECTION BB

NOTES:

1. PROVIDE ALL SIGNAL HEADS WITH 5" BACKPLATES.
2. CONTACT MOA SIGN SHOP FOR MOUNTING METHOD.
3. PROVIDE MINIMUM VERTICAL CLEARANCE OF 18' FROM ROADWAY TO BOTTOM OF SIGNAL HEAD HOUSING OR BOTTOM OF SIGN.
4. WIRE SIGNAL FACES 1 AND 2 ON FLASHER CIRCUIT 1 AND SIGNAL FACES 3 AND 4 ON FLASHER CIRCUIT 2.
5. EACH UNIT SHALL CONSIST OF FOUR 12-INCH AMBER L.E.D. SIGNAL FACES AND TUNNEL TYPE VISORS WITH OPEN SLOTS AT THE BOTTOM.

MUNICIPALITY OF ANCHORAGE	SCALE: NTS APPROVED: REVISED: 5/08	MAST ARM MOUNTED SIGN BEACONS	SECTION # 80.22 DETAIL # 80-58

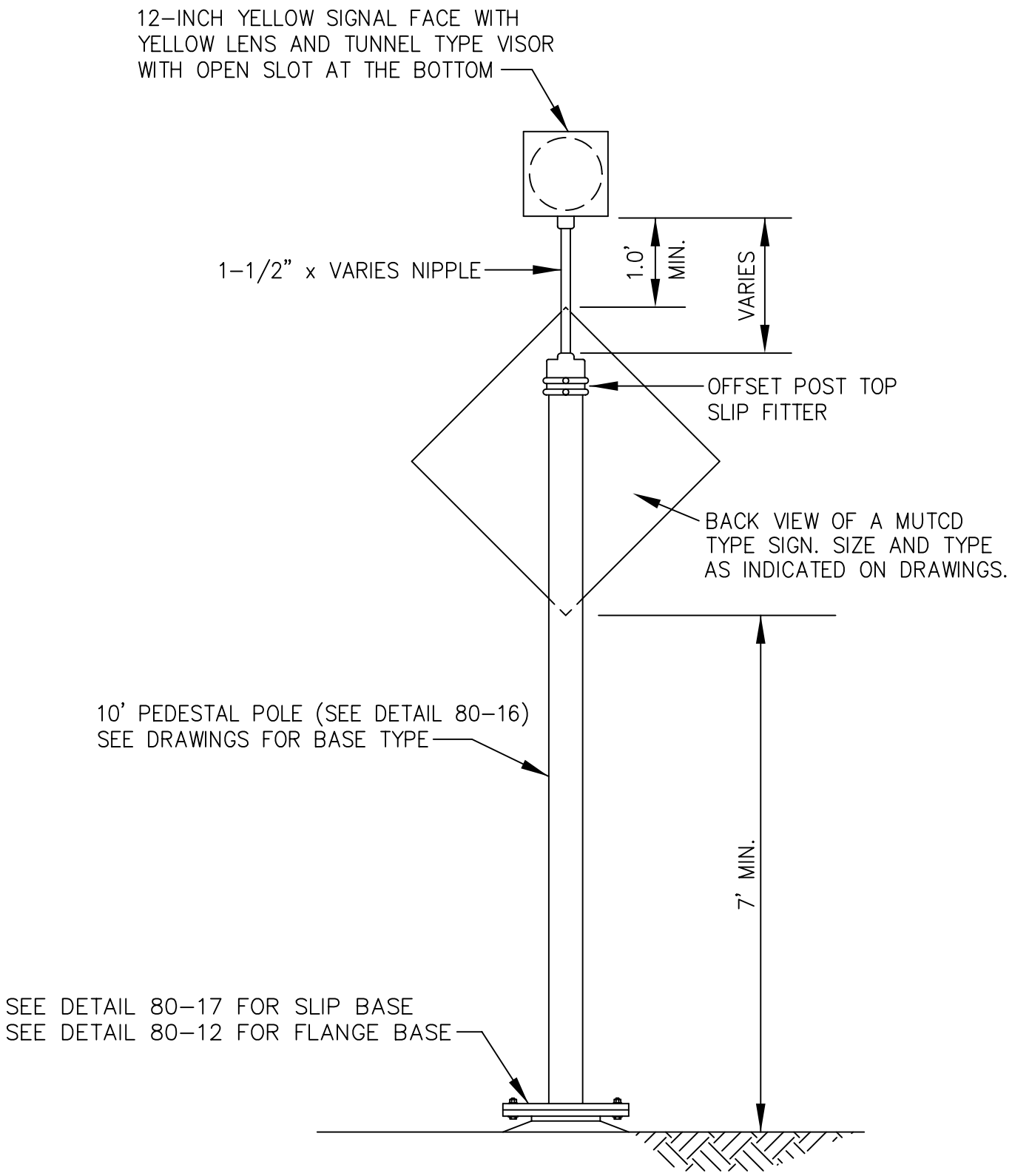

MUNICIPALITY OF ANCHORAGE	SCALE: NTS APPROVED: REVISED: 10/07	WARNING SIGN BEACON	SECTION # 80.22 DETAIL # 80–59

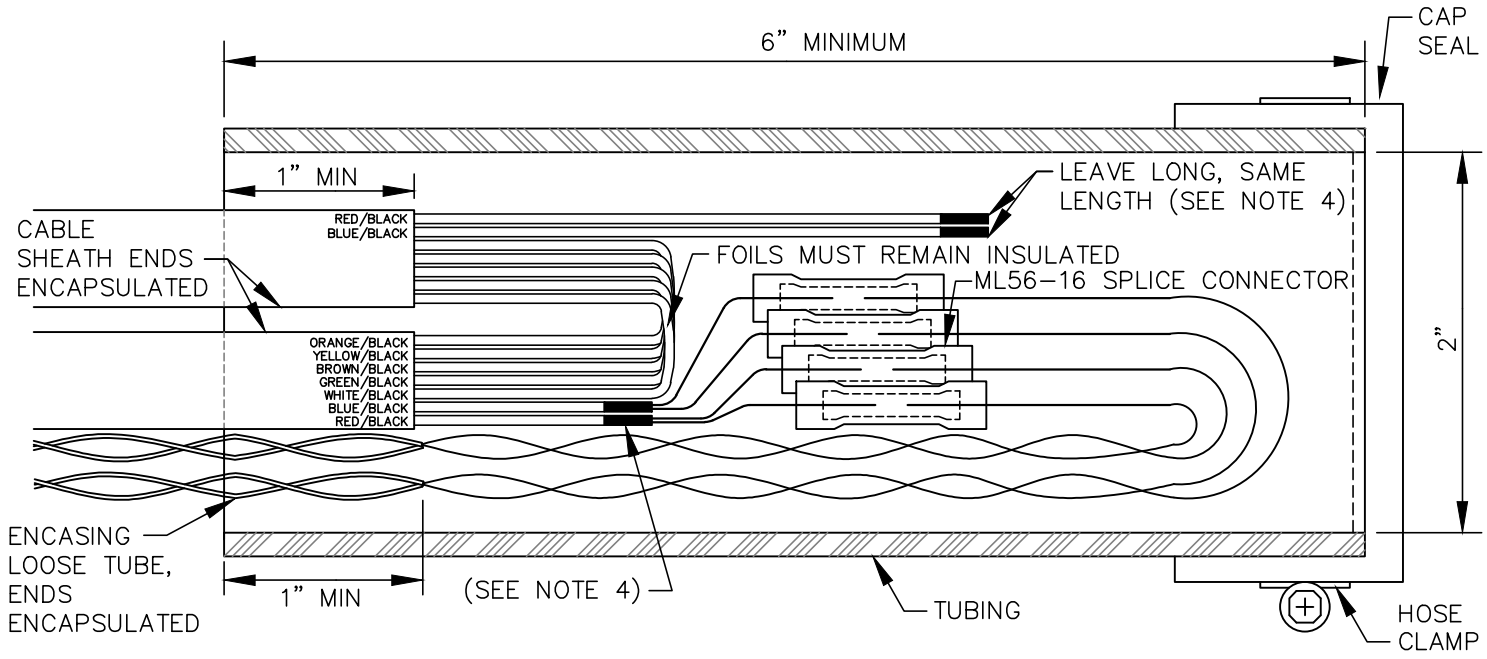

MATERIAL PROPERTIES	
LOOP LEAD-IN SPLICE	
TUBING	2" HDPE FLEXIBLE CORRUGATED CONDUIT
CAP SEAL	FERNCO QWIK CAP #QC-102
HOSE CLAMP	STAINLESS STEEL
SPLICE CONNECTOR	MULTILINK ML56-16 OR APPROVED EQUAL
COMPOUND	RE-ENTERABLE ENCAPSULATION

NOTES:

1. FABRICATE LOOP LEAD-IN SPLICE IN THE FIELD AS SHOWN.
2. CAP SEAL ONE END AND COMPLETELY FILL OPEN END WITH RE-ENTERABLE ENCAPSULATION COMPOUND TO EDGE OF CORRUGATED CONDUIT.
3. LEAVE A MINIMUM OF 1/2" CLEARANCE BETWEEN THE ENCLOSURE AND THE SPLICE AT BOTH ENDS OF THE CORE FLOW.
4. EXPOSED FOIL AND DRAIN WIRES, SEAL WITH HEAT SHRINK TUBING (TYP).
5. SECURE CABLE/CONDUCTOR BUNDLE WITH NYLON CABLE TIES.

REVISION: 1/15 CHANGED CORE FLOW TO HDPE FLEXIBLE CORRUGATED CONDUIT

MUNICIPALITY OF ANCHORAGE	SCALE: NTS APPROVED: REVISED: 1/15	SPLICE DETAIL LOOP DETECTOR LEADS	SECTION # 80.48 DETAIL # 80-60

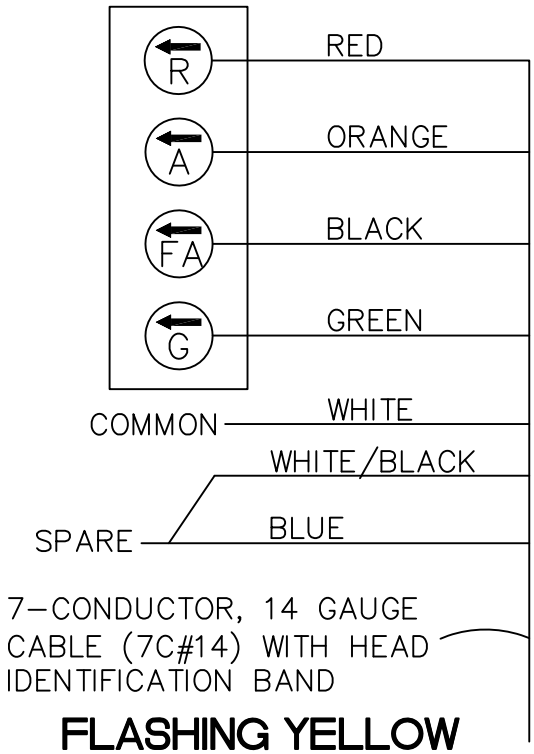

FLASHING YELLOW HEAD

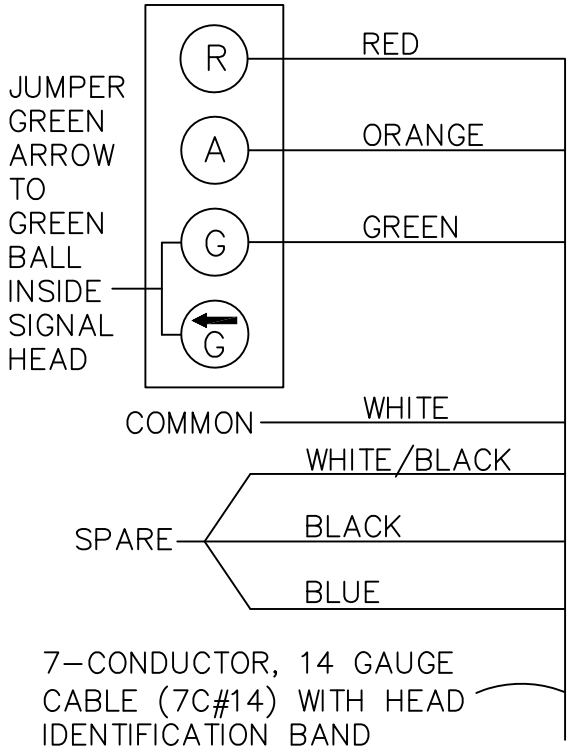

4 SECTION HEAD

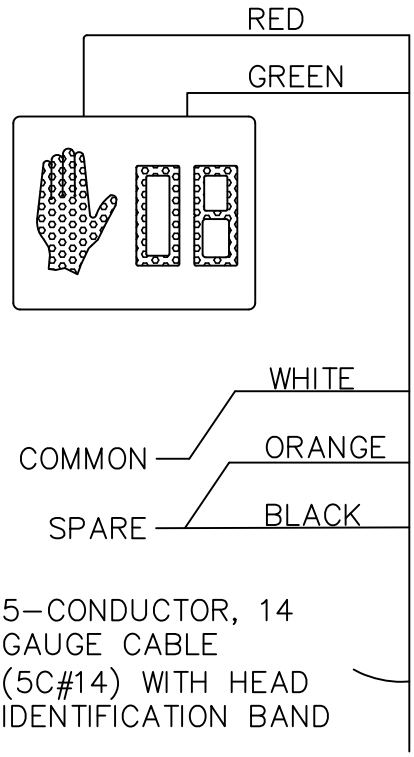

PEDESTRIAN HEAD

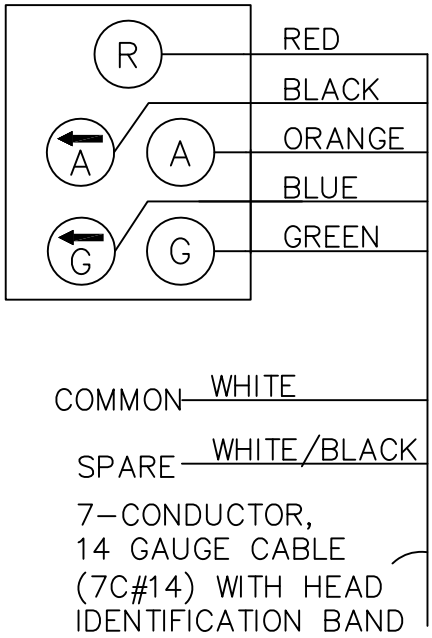

5 SECTION HEAD

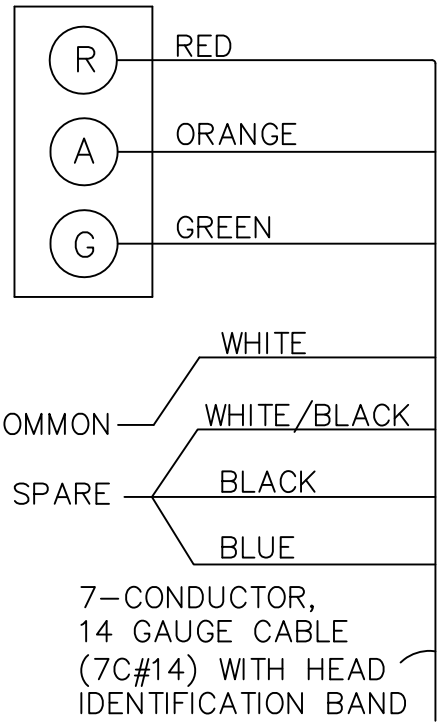

3 SECTION HEAD

REVISION: 2/2012 ADDED FLASHING YELLOW HEAD DIAGRAM.

MUNICIPALITY OF ANCHORAGE	SCALE: NTS APPROVED: REVISED: 2/12	SIGNAL HEAD WIRING DETAILS	SECTION # 80.19& 80.20 DETAIL # 80-61

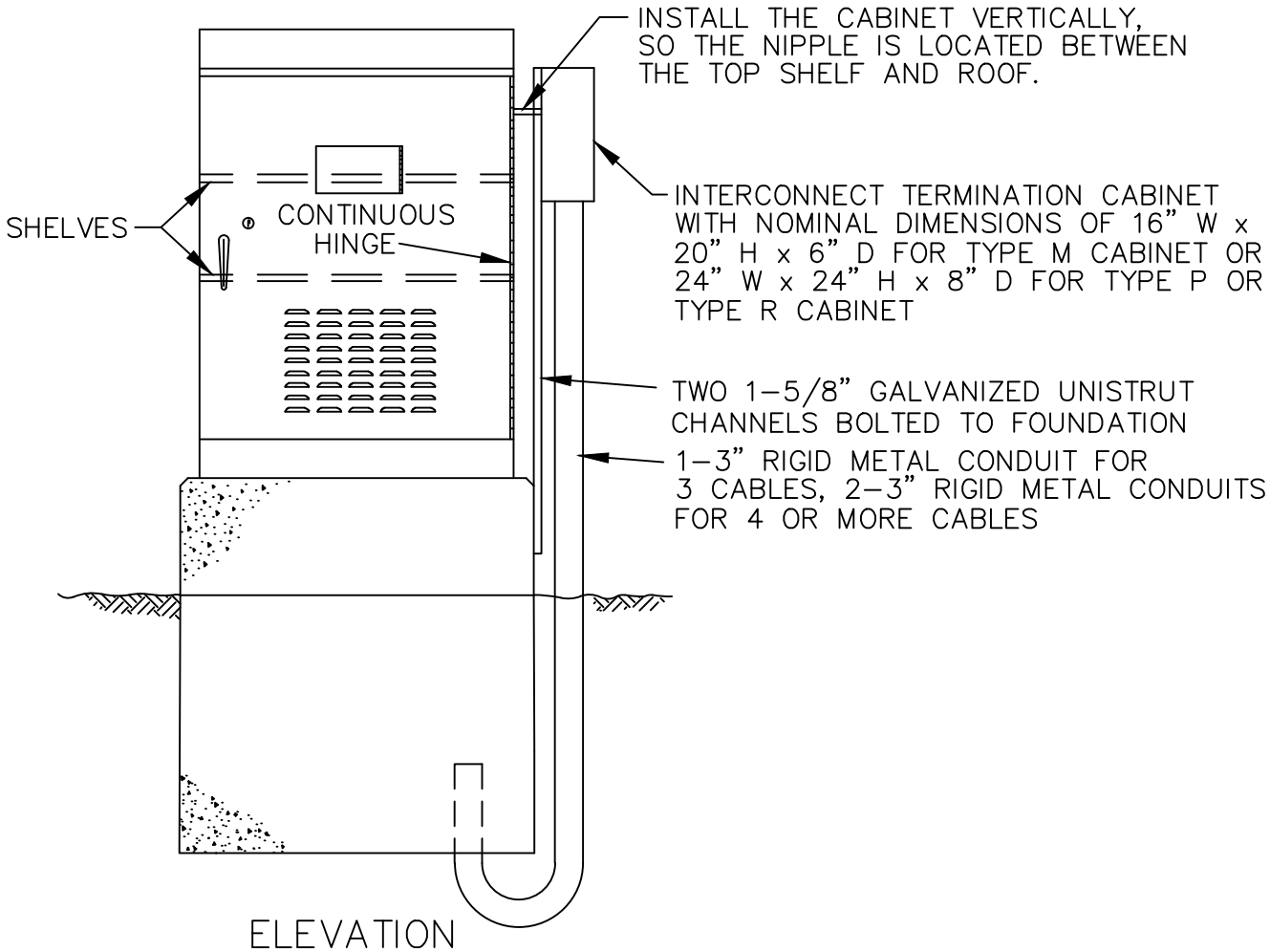

ELEVATION

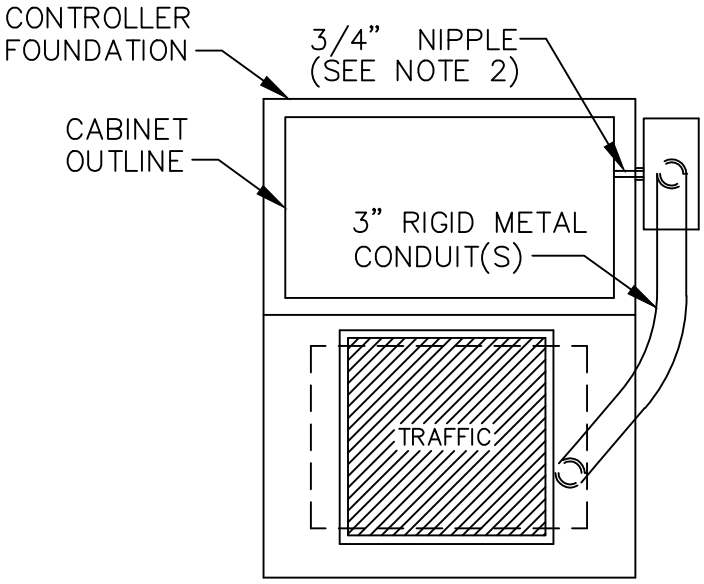

PLAN VIEW

NOTES:

1. INSTALL THE INTERCONNECT CABLE TERMINATION CABINET WHEN CALLED FOR IN THE DRAWINGS.
2. COORDINATE INSTALLATION LOCATION OF 3/4" NIPPLE WITH MOA TRAFFIC SIGNAL ELECTRONICS, PRIOR TO DRILLING HOLE IN CABINETS.
3. SEE DRAWINGS TO DETERMINE WHETHER TO INSTALL ON RIGHT OR LEFT SIDE WALL OF CONTROLLER CABINET.
4. DRILL HOLE IN STANDOFF MOUNTED BACK PANEL TO PROVIDE UNIMPEDED ACCESS TO NIPPLE FOR CABLE ROUTING. COORDINATE LOCATION WITH MOA TRAFFIC SIGNAL ELECTRONICS PRIOR TO DRILLING HOLE.

MUNICIPALITY OF ANCHORAGE	SCALE: NTS APPROVED: REVISED: 1/15	**INTERCONNECT CABLE TERMINATION CABINET**	SECTION # 80.26 DETAIL # 80-62

REVISION: 1/13 1/2" NIPPLE TO 3/4" NIPPLE, EDITED NOTE 4 1/15 EDITED NOTE 1 TO REMOVE 3 OR MORE

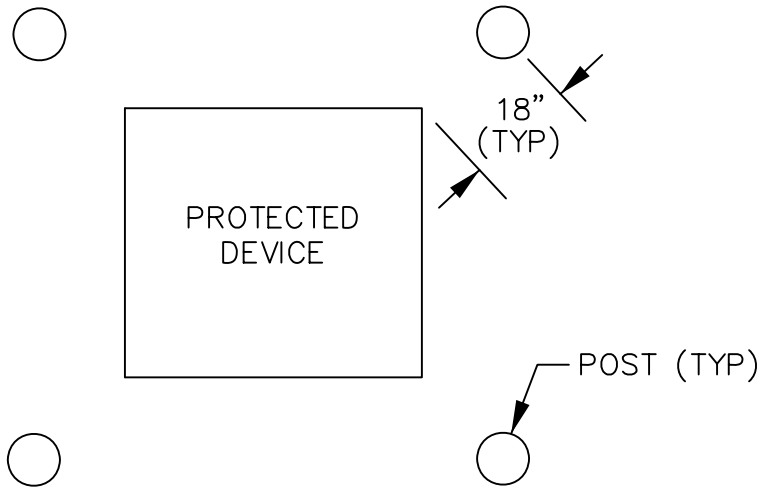

PLAN

LOCATE POSTS AS SHOWN

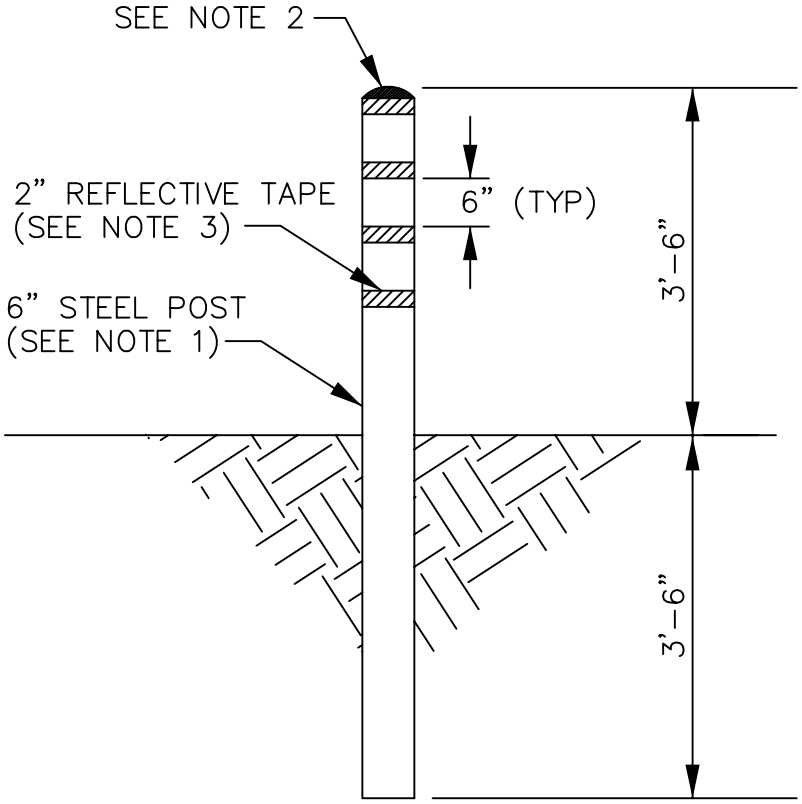

POST DETAIL

NOTES:

1. PROVIDE 6" STEEL, SCHEDULE #40 PIPE, FILLED WITH CONCRETE.
2. ROUND CONCRETE AT TOP OF POST SMOOTH AND PAINT YELLOW.
3. INSTALL 4-2" BANDS OF YELLOW REFLECTIVE TAPE AS SHOWN.
4. LOCATION AND QUANTITY OF POSTS AS INDICATED ON DRAWINGS.

MUNICIPALITY OF ANCHORAGE	SCALE: NTS APPROVED: REVISED: 10/07	**PROTECTIVE POST ASSEMBLY**	SECTION # 80.28 DETAIL # 80-63